MIL-D-7822
16 NOVEMBER 1951

Superseding
NAVER SR-165A
6 January 1947

MILITARY SPECIFICATION

DRAWINGS: FOR STANDARD AIRCRAFT CHARACTERISTICS AND PERFORMANCE CHARTS, PILOTED AIRCRAFT

This specification was approved by the Departments of the Army, the Navy, and the Air Force for use of procurement services of the respective Departments.

1. SCOPE

1.1 This specification covers the preparation of drawings for Standard Aircraft Characteristics Charts. Drawings prepared in accordance with this specification and Specification MIL-C-5011, will be published and distributed by the procuring agency. For the purpose of clarity in the enclosed figures, the symbol "X" has been used to denote the use of numbers and the symbol "O" to denote letters or words.

1.1.1 The specification has been prepared to implement the preparation of Air Force and Bureau of Aeronautics drawings. Deviations from instructions herein to more adequately portray the capabilities of certain aircraft are encouraged, but shall in all cases be approved by the procuring agency prior to preparation of final reproducible copy.

1.2 Application.- For all piloted aircraft proposed or contracted for subsequent to the effective date of this specification, "Cover Illustration or Photos," "Descriptive Arrangement," "Armament and/or Tankage" and "Inboard Profile" drawings shall be prepared and submitted to the procuring agency for acceptance in accordance with the provisions of this specification, unless specifically exempted or otherwise authorized by the procuring agency.

2. APPLICABLE SPECIFICATIONS AND OTHER PUBLICATIONS

2.1 The following publications, of the issue in effect on date of preparation of drawings, shall form a part of this specification to the extent specified herein:

2.1.1 Specifications.-

Military

MIL-C-5011	Charts; Standard Aircraft Characteristics and Performance, Piloted Aircraft

2.1.2 Other Publications.-

Military Standards (Book)

MIL-STD-2	Drawing Sizes
JAN-STD-1	General Drawing Practice

Air Force-Navy Aeronautical Bulletin

No. 261 Abbreviations and Contractions; Approved List of

Navy Department

United States Navy Security Manual for Classified Matter 1951

U. S. Air Force Regulation

AFR 205-1 Security Safeguarding Military Information

(Copies of specifications, standards, and drawings required by contractors in connection with specific procurement functions should be obtained from the procuring agency or as directed by the contracting officer.)

3. REQUIREMENTS

3.1 Types of Drawings.-

3.1.1 Types and contents of drawings shall be as follows:

(a) Standard Aircraft Characteristics:

(1) First page - cover sheet shall include a photograph or perspective drawing of the aircraft model in flight.

(2) Second page - a set of drawings showing a general arrangement diagram, armament and/or tankage installation, pressurization, and an inboard profile of the aircraft as required by the procuring agency.

(b) Characteristics Summary:

(1) First page - undimensioned general arrangement diagram.

(2) Flight profile of basic mission key altitudes and each title of combat radius problems.

(c) Supplemental Data:

(1) Supplemental page(s) - Additional pages shall be used to present supplementary data not elsewhere covered. These data may include line, halftone or photos of cargo tie-down points, fields of fire, graphs, or illustrations.

3.2 Size and Preparation.- The standards set forth in MIL-STD-2 (Drawing Sizes) shall govern the drawings herein, unless otherwise specified.

(a) Air Force - The oversize format (14-1/4 x 11 inches) may be obtained upon request to the procuring agency. Page size of the Standard Charts when finally reproduced by the procuring agency shall be 8-1/2 x 11 inches. Drawings shall be arranged, as shown in figures 7, 8, and 9, in order to be in direct proportion for reduction photographically.

(b) Navy - Drawings shall be traced, drawn, or photographically reproduced on tracing cloth or vellum and shall be not less than 28 inches and not greater than 36 inches wide. Length is not specified, since it will be determined by the over-all height of the three views which shall be arranged as shown in figures 1 through 6. The length and width of the drawings shall be proportioned for reduction to a block 7-1/4 inches in height and 4-3/8 inches in width.

3.2.1 Abbreviations.- Except as provided herein, abbreviations shall be used throughout the chart only when necessitated by space limitations. Abbreviations used shall be in agreement with current ANA Bulletin No. 261.

3.2.2 Classification.- Over-all classification shall be the highest classification of any data appearing in the charts, and shall be in accordance with AFR 205-1 or U. S. Navy Security Manual for Classified Matter 1951 (OPNAV Instruction 551.1).

3.3 Master Change Request.- All Master Change Requests authorized to date shall be incorporated in the drawings. A note, outside the trim lines, shall give the number of the latest authorized Master Change Request.

3.4 Perspective, Photo or Illustration.-

(a) Air Force - Page one cutaway drawing - In the preparation of this page, a perspective cutaway of the aircraft shall be submitted, not as a paste up on page 1, but as an additional illustration in order to separate line plates from halftone plates. Acetate overlays of the line negative will not be accepted. Artist conception drawings of the aircraft are preferred; however, if facilities for making drawings are not available, suitable retouched photographs shall be substituted. Cutaway drawing or photo shall not be smaller than 7-1/4 x 13 inches, nor larger than 11 x 18 inches. Mounting of the illustration shall be sufficient to give ample stripping margins. Drawing shall be sharp and of sufficient contrast hue to be reproduced satisfactorily by offset printing. Drawings of the aircraft in flight, are preferred, but ground views are acceptable if background is not distracting. The drawing shall be from that angle which best portrays the distinguishing features of the aircraft. Insignia or aircraft serial numbers shall not be shown. The visible combat equipment, etc., shown in the perspective cutaway shall, in all cases, be in agreement with the inboard profile and with the characteristics data shown. The above requirements are applicable to USAF aircraft only.

(b) Navy - In order of preference: A photograph of the aircraft in flight, a photograph of the aircraft on the ground, a photograph of a model, or an artist conception drawing of the aircraft in flight shall be submitted. The photograph or drawing shall be not greater than 9 inches nor less than 8 inches in width and not greater than 5 inches nor less than 4 inches in height. The drawing or photograph shall be of sufficient contrast hue to permit satisfactory reproduction and should portray the distinguishing features of the aircraft.

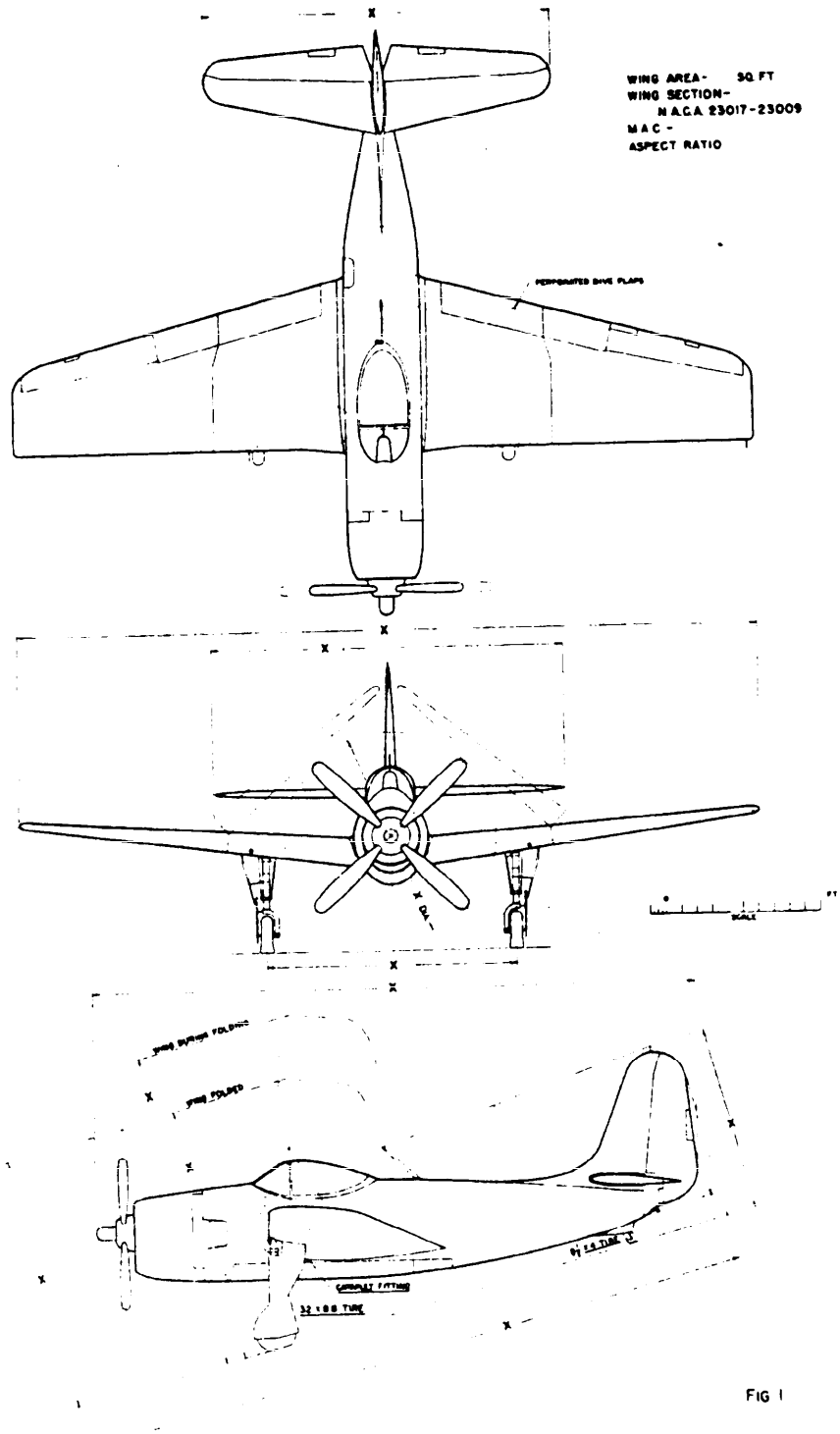

FIG 1

DESCRIPTIVE ARRANGEMENT

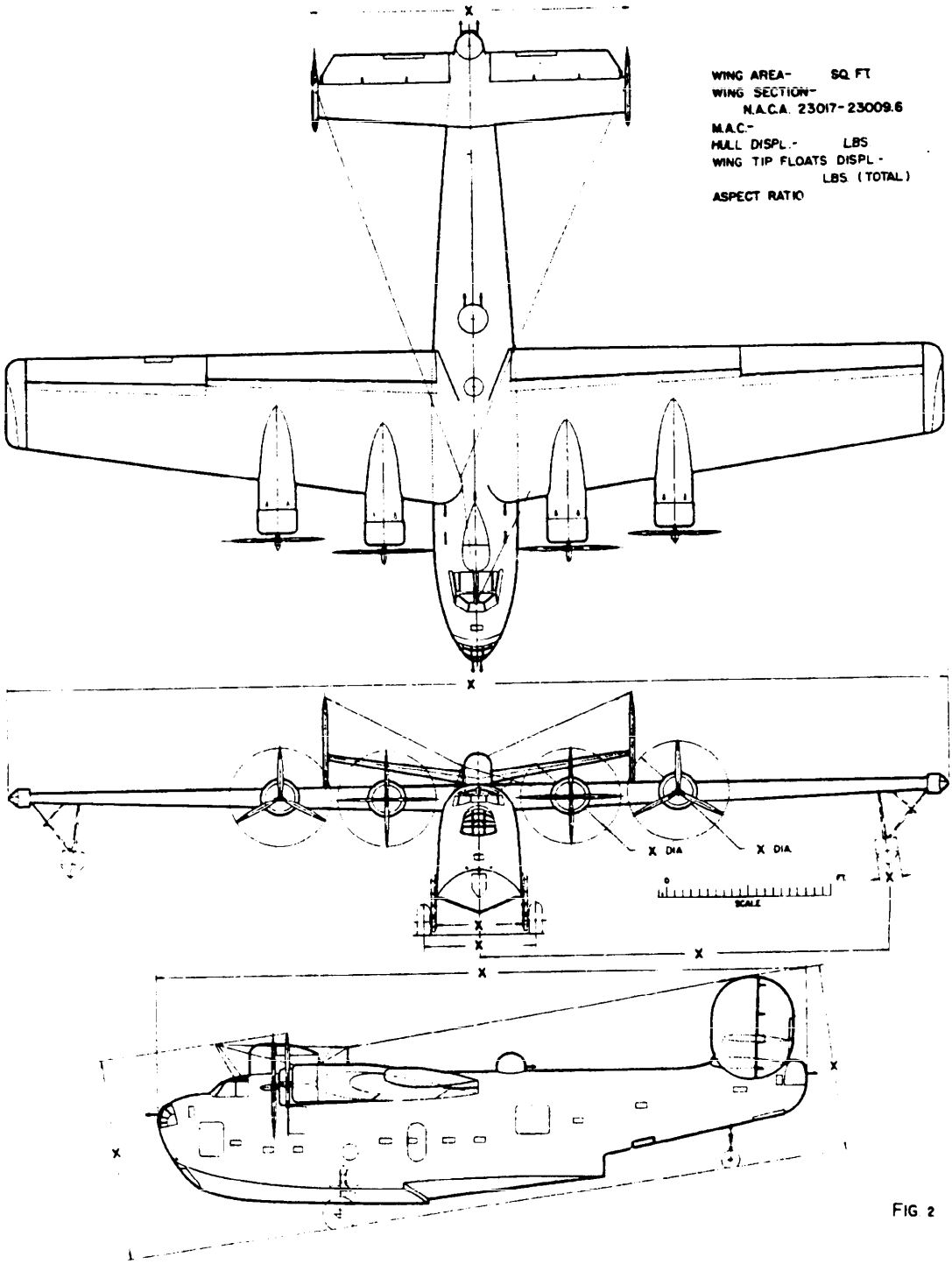

FIG 2

DESCRIPTIVE ARRANGEMENT

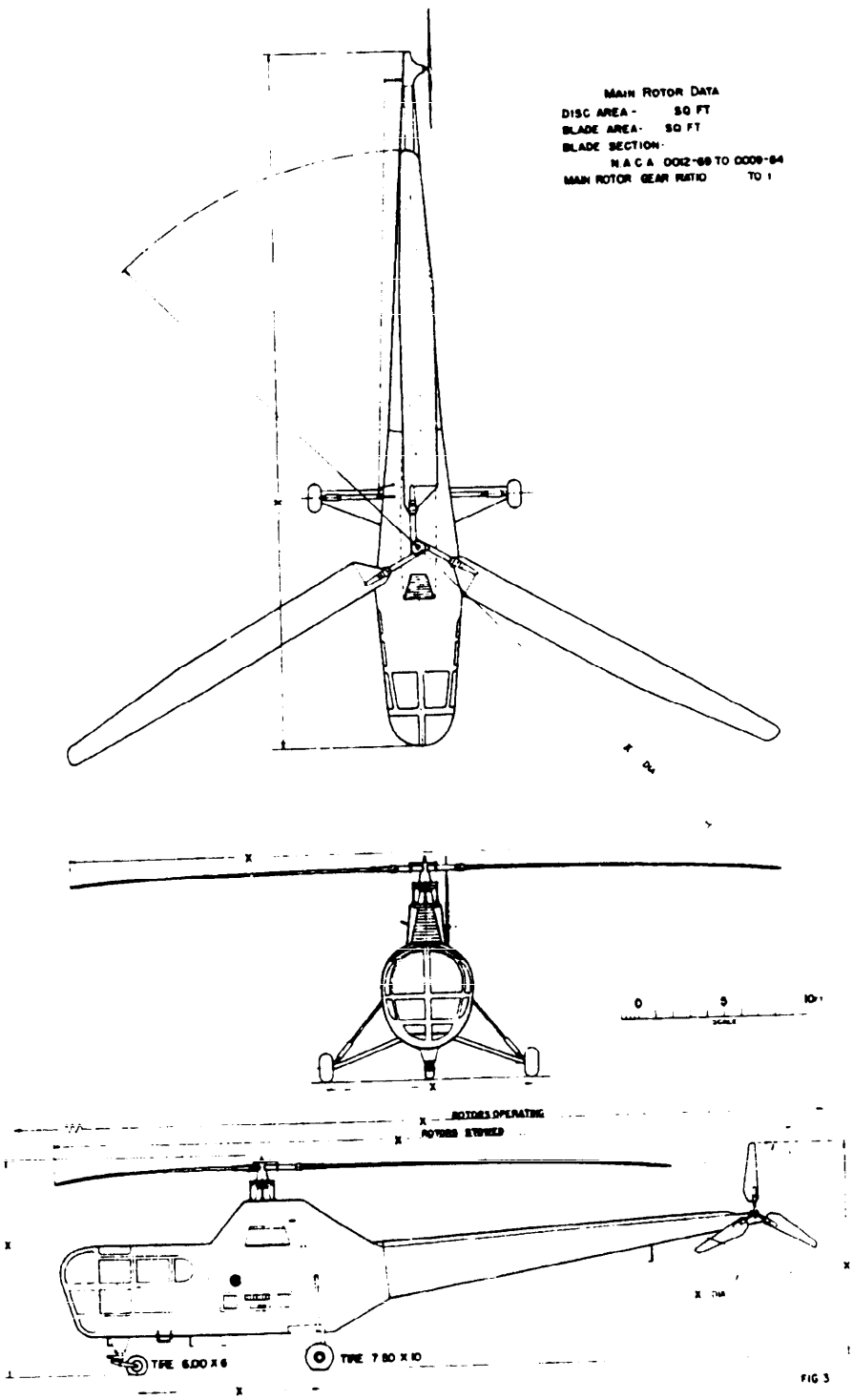

DESCRIPTIVE ARRANGEMENT

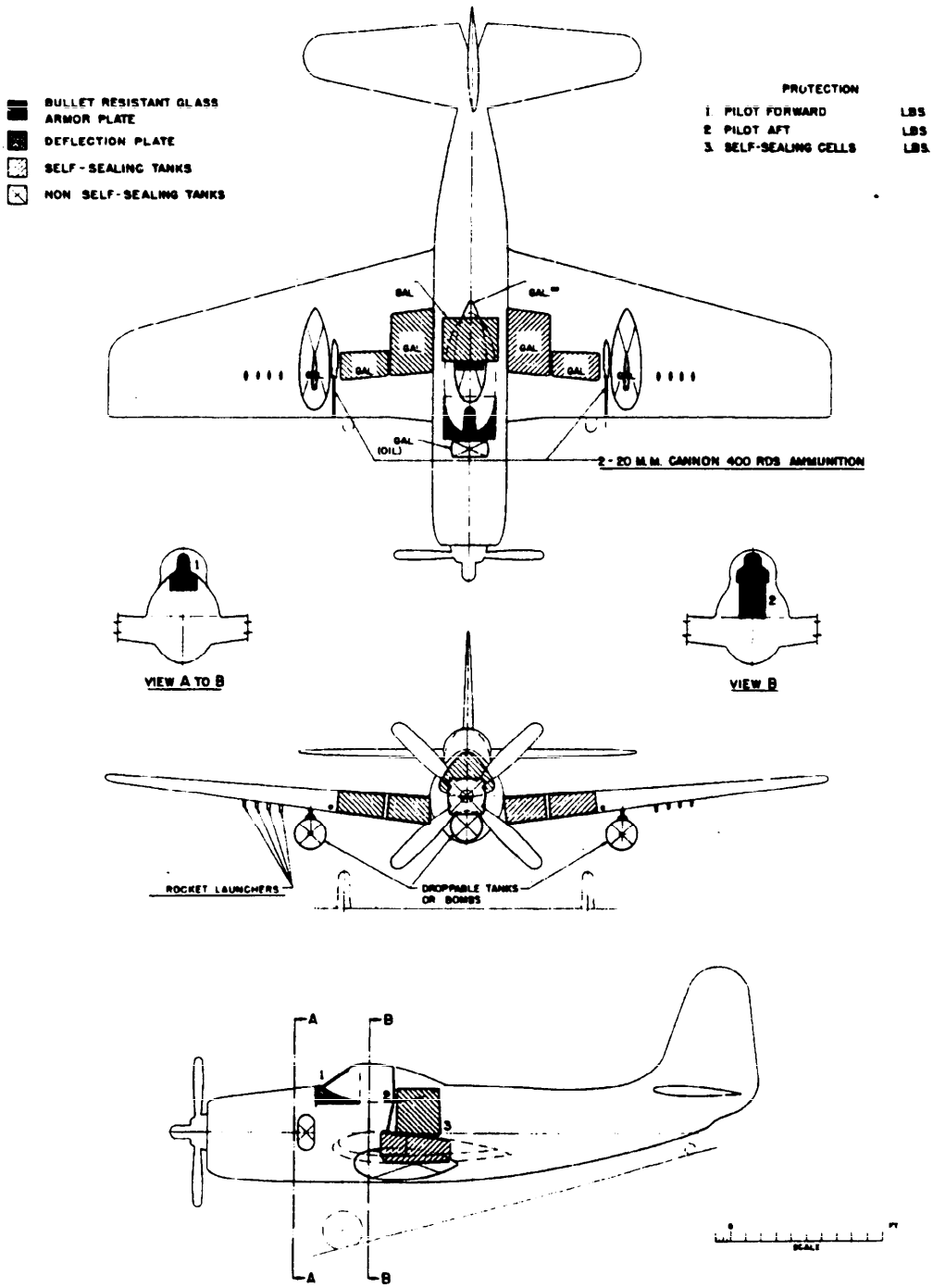

ARMAMENT & TANKAGE

FIG. 4

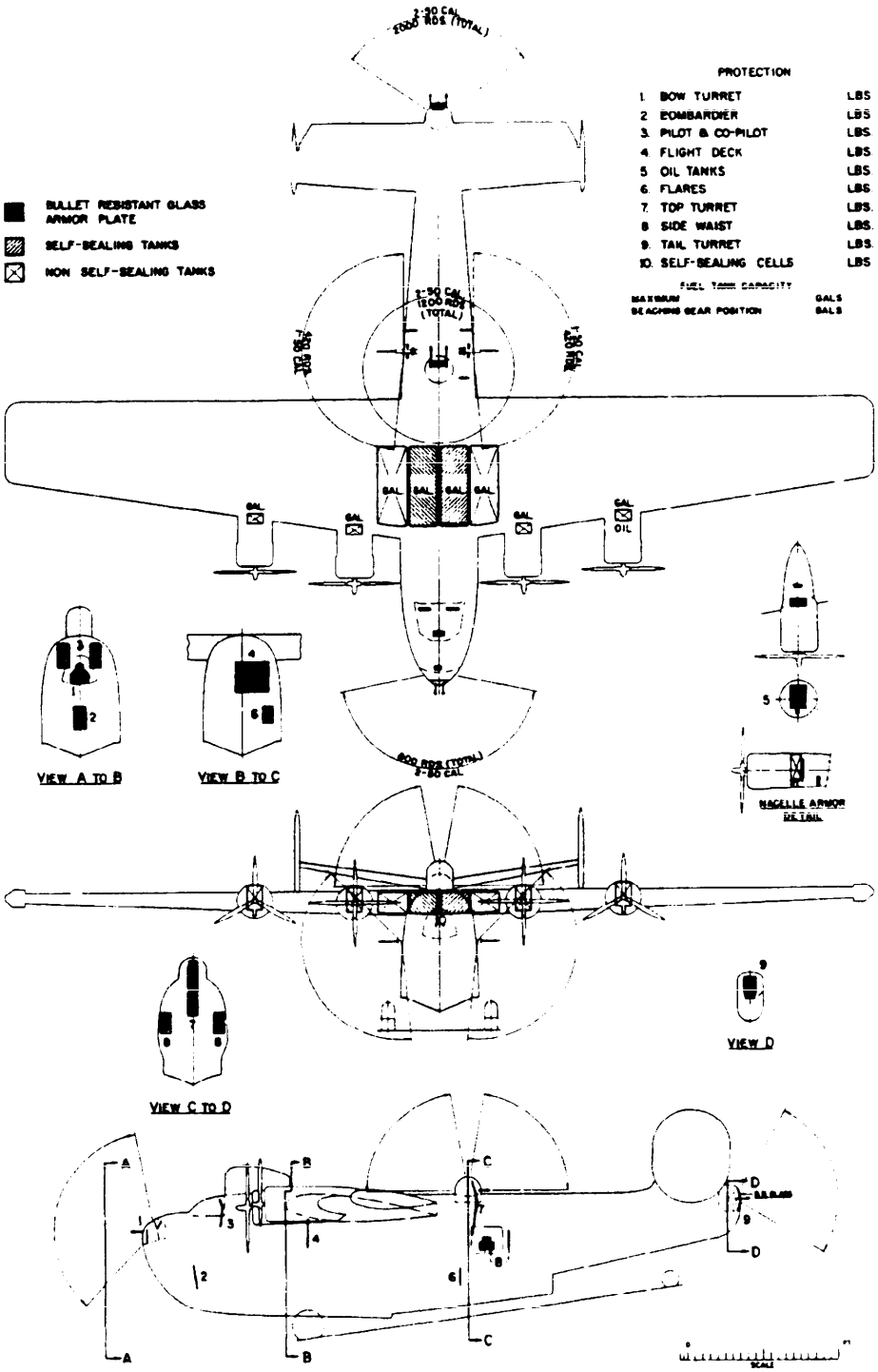

ARMAMENT & TANKAGE

FIG 5

CHARACTERISTICS SUMMARY

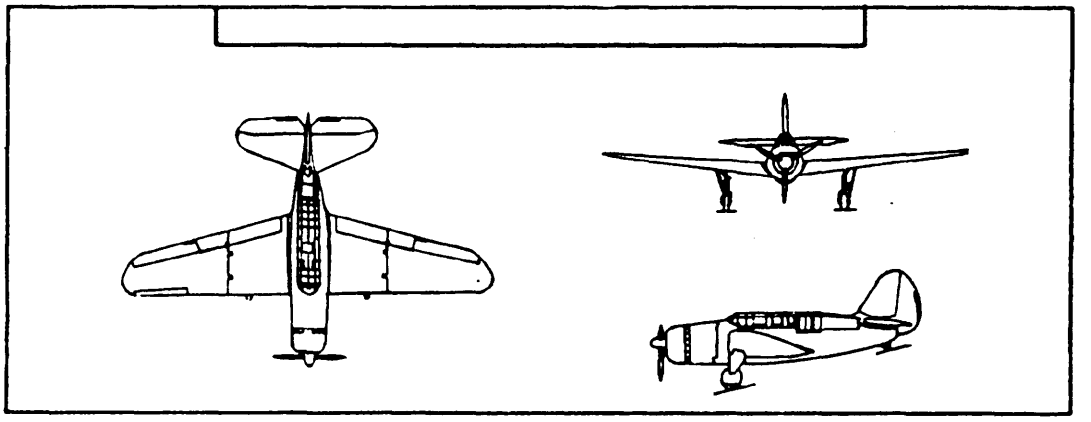

FIGURE (6)

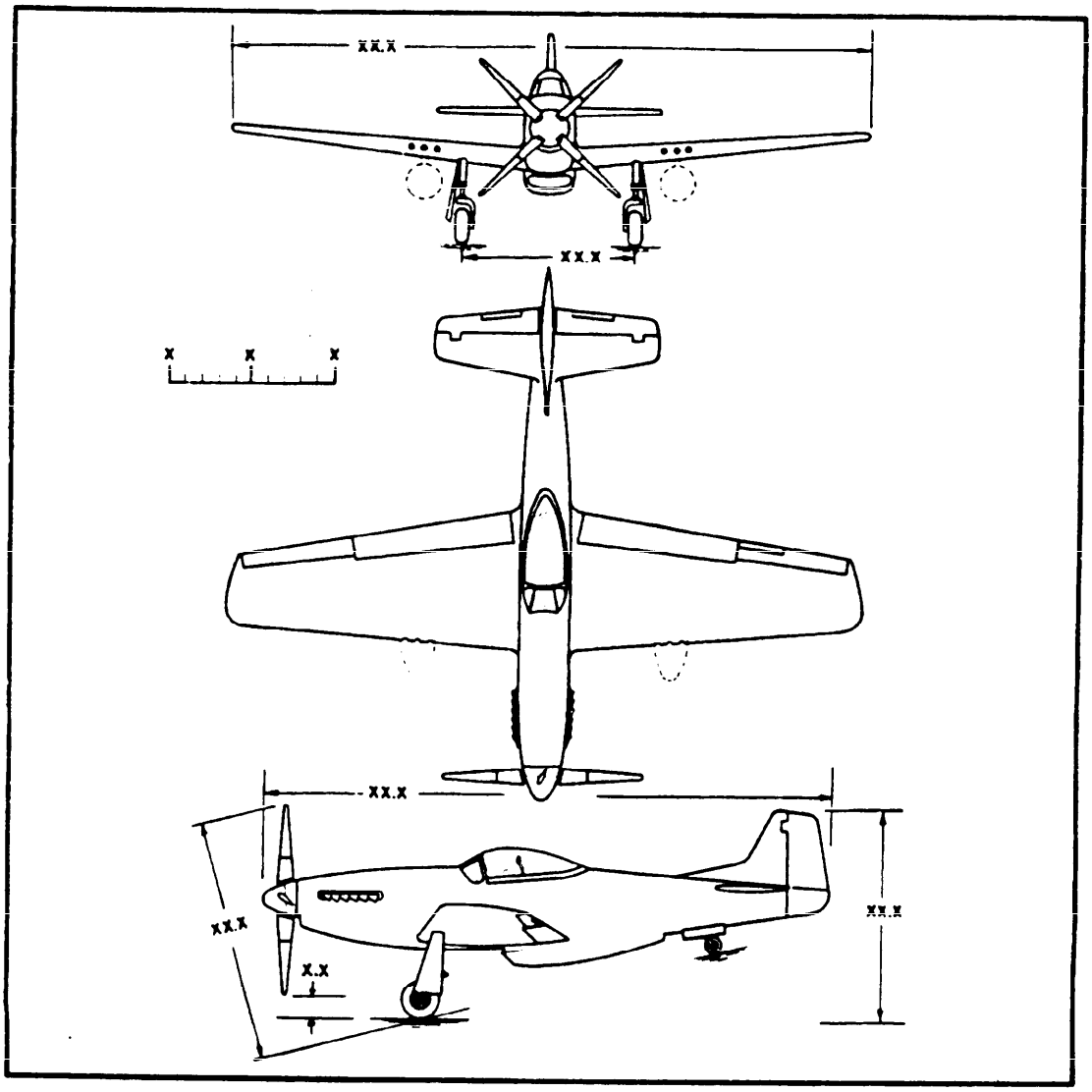

DRAWN BY:- *DRAFTSMAN - DATE*

REVISION:

DRAFTSMAN - DATE

SYMBOL

MODEL

Fig. 7

Wing Area . . . . . xxxx oo oo
Aspect Ratio . . . . . xx. x

Wing Section . . . . . oooooo xxx
M. A. C. . . . . xxx. xx"

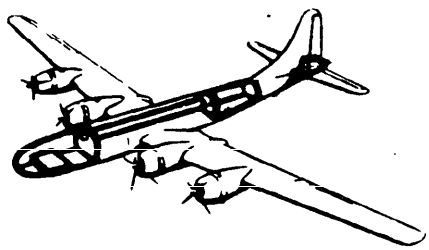

oooooooooooo oooo

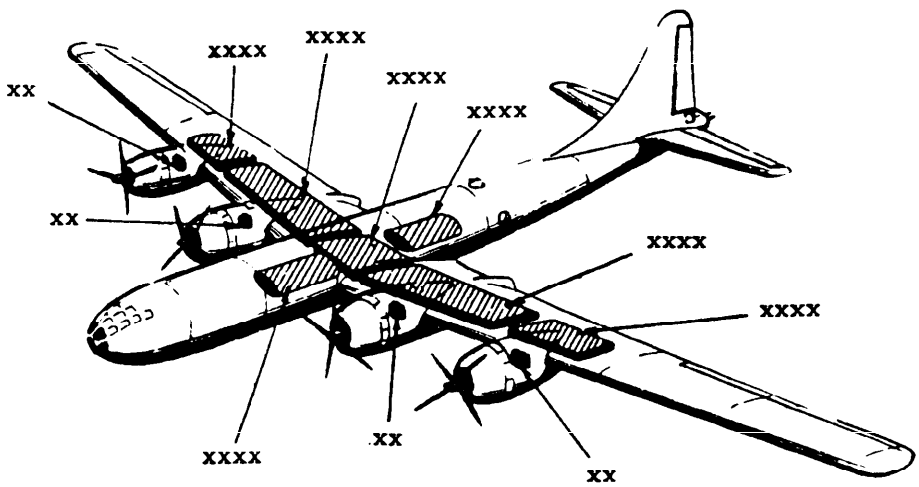

Fuel (Gal) ☆ Water Alcohol (Gal) Oil (Gal)

Fig. 8

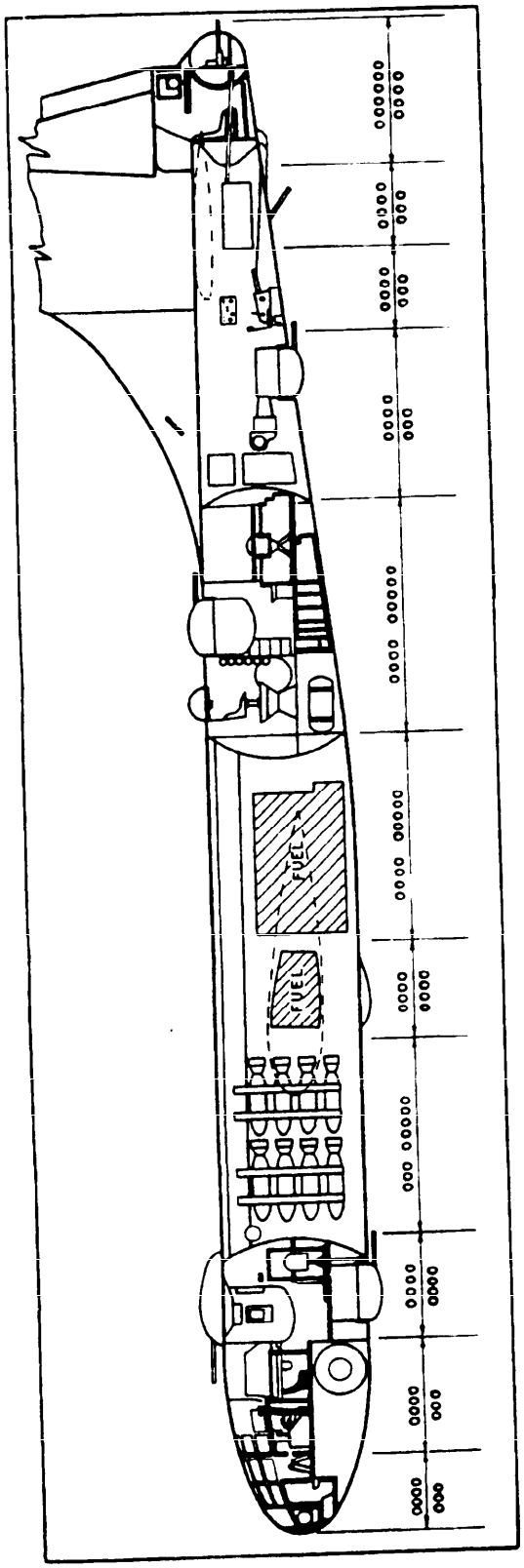

Fig.9

3.5 Descriptive Arrangement.- Page two general arrangement drawing: The material pertinent to each view shall be as follows.

3.5.1 Plan View.- The plan view (center line of fuselage vertical with nose pointed toward bottom of page) shall contain external tankage, as indicated under paragraph 3.5.2. Span of the horizontal tail shall be given for Navy aircraft. Drawing shall contain no other dimensions unless the peculiarities of the aircraft warrant the usage for identification not elsewhere described. For helicopters (figure 3) show in this view over-all fuselage length (excluding rotors) and the rotor(s) diameter.

3.5.2 Front View.- The front view shall be a front elevation in flight attitude with gear extended. External tanks (droppable) shall be shown in dotted line. External tanks (fixed) shall be shown in solid line. If tanks of alternate capacities can be used interchangeably or in combination, the tankage of maximum permissible capacity shall be shown. Dimensions shall include the span (without tip tanks if droppable) and maximum tread. Span with wings both folded and open shall be given for aircraft with folding wings. Maximum tread shall be shown to the center line of the outer wheels for single wheel gear, and to the center line of the outer struts for dual wheel gear. For helicopters (figure 3) dimensions shall include the maximum over-all lateral span of the rotor(s) fixed and stowed, when applicable, and the maximum tread.

3.5.3 Side Elevation.- The side elevation (nose pointing either right or left to best portray the cargo doors, windows, etc.) shall be placed in a level flight attitude. Maximum over-all length of the basic aircraft and height above the ground in a static attitude (prop or rotors pulled through to max height, if applicable) shall be shown. For Navy aircraft, additional dimensions shall correspond to those given in figures 1 through 4, for similar type aircraft. For USAF aircraft, dimensions shall be as shown in figure 7. For helicopters (figure 3) maximum over-all length with rotors operating and stowed shall be substituted for over-all fuselage length of conventional aircraft. External tanks shall be omitted on this view.

3.5.4 Scale.- The scale shall be placed conveniently within space to the right or left (within the rectangle) of the aircraft grouping. The scale is to be prepared in such a manner as to best compare the scales used to the actual dimensions. A scale bar approximately 1-1/4 inch long shall be divided into multiples of 1, 5, or 10 feet, as appropriate.

3.5.5 Dimensions and Marking for Descriptive Arrangement Drawings.- Drawings of the airplane with essential features clearly delineated are illustrated in figures 1 through 4. The dimensions and data required shall correspond to those given on the figure for similar type aircraft and shall include the following:

(a) Wing span in feet and tenths
(b) Tread in feet and tenths
(c) Fuselage length in feet and tenths
(d) Height in feet and tenths
(e) Prop ground clearance in inches
(f) Wing area, MAC, Aspect Ratio, Wing Section (root and tip) (as specified by Specification MIL-C-5011)

3.6 Armament, Tankage, and Pressurization.- Page two drawing: The sequences and material pertinent to each component shall be as follows:

(a) Navy - One three-view outline drawing of the airplane, without dimensions, showing armor, fixed and flexible guns, turrets, bomb, rocket, and torpedo stations, fuel and oil tanks with the cross-hatching convention shown in figures 5 and 6. Also, as shown in the figures, the nominal capacity of each of the tanks shall be tabulated. Unless otherwise specified, no armament and tankage drawings are required for aircraft of the following classes: VR, VU, VT, VO, and H.

(b) Air Force -

(1) Tankage diagram shall be a simplified perspective line drawing of the aircraft as shown in figure 8. Armor, fixed, and flexible guns, bomb, rocket and torpedo stations, cargo space and interior arrangement other than tankage shall not be shown. The fuel tanks (external and internal) are to be shaded with diagonal hatching and the corresponding key is to be entered in the lower left corner. External tanks shall include those described in paragraph above. The engine oil tanks shall be solid black and keyed in the lower right corner. Water/alcohol tanks shall be shown by a star and keyed. Usable capacities shall be shown as call outs for each tank located outside the drawing near the respective tanks. A tank shall be considered to be a cell or series of cells forming a composite unit. Directly above the drawing wing area (gross), Aspect Ratio, Wing Section (root and tip) and MAC shall be tabulated. For rotary wing aircraft the following items shall be substituted for those listed above: Disc Area (Geometric), Blade Area (Geometric), Airfoil Section(s).

(2) A pressurization area (figure 8) shall be shown in phantom perspective view approximately one-fourth the size of the tankage diagram. The pressurized area shall be portrayed in a heavy black outline.

(3) An inboard profile (figure 9) shall show the following equipment when applicable: Guns, bombs, crew stations, oxygen tanks, flight controls, armor plate (dominant black outline) cameras, cargo space, ramps, engines, fuel tanks in fuselage, wheel wells, etc. Wing root and horizontal tail root shall be superimposed in dotted line. Call outs to the main compartments from station to station shall be clearly delineated and titled.

3.7 Supplemental Data.- Aircraft characteristics and performance data not coming within the scope of the Standard Aircraft Characteristics charts shall be presented on Supplemental page(s).

3.7.1 Fields of Fire.- (Air Force only) The field of fire shall be supplemental data, as applicable, illustrating the azimuth and elevation in degrees on the three general arrangement views of the aircraft.

3.7.2 Cargo Tie-Down.- (Air Force only) Cargo tie-down shall be shown in plan view in order to facilitate tabulation of the points from station to station.

3.7.3 Special Features.- Special features may be illustrated or presented on this page to portray an unusual feature or application of the aircraft model.

3.8 Summary Descriptive Arrangement.- An undimensioned three-view drawing of the aircraft model shall be shown on the first page within the space provided, as shown in figure 6.

3.8.1 Basic Radius Profile.- Simple line sketch of the principal portions of the applicable combat radius problem to outline the flight profile showing key altitudes and giving title of combat radius problem shall be shown.

3.9 Workmanship.- Workmanship shall be of high quality in accordance with general drafting-room practice, as set forth in JAN-STD-1.

4. SAMPLING, INSPECTION, AND TEST PROCEDURES

4.1 Inspection and Acceptance.- Drawings shall be subject to final inspection and approval of the procuring agency.

5. PREPARATION FOR DELIVERY

5.1 Packing.- Drawings shall be packed in such a manner that contents will not be damaged during shipment. Drawings shall not be folded. All shipping containers containing drawings shall also contain a copy of the applicable letter of transmittal.

5.2 Marking.- All shipping containers shall be addressed, as applicable, to:

(a) Navy: Chief, Bureau of Aeronautics
Department of the Navy
Washington 25, D. C.
ATTN: DE-33

(b) Air Force: Commanding General
Wright Air Development Center
Wright-Patterson Air Force Base
Dayton, Ohio
ATTN: WCSF

6. NOTES

6.1 Interpretations.- Interpretations of the requirements of this specification may be obtained by addressing the applicable offices listed in paragraph 5.2.

Custodians:
Navy - Bureau of Aeronautics
Air Force