MIL-D-6728A
15 NOVEMBER 1956
Superseding
MIL-D-6728
16 June 1950

MILITARY SPECIFICATION

DAMPERS; ENGINE EXHAUST FLAME AND GLARE

This specification has been approved by the Department of Defense and is mandatory for use by the Departments of the Army, the Navy, and the Air Force.

1. SCOPE

1.1 Scope.- This specification covers engine exhaust flame and glare dampers.

1.2 Classification.- Engine exhaust flame dampers shall be of the following types, as specified (see 6.2):

Type I	Individual stack type (nondetachable)
Type II	Exhaust collector and individual stack type (detachable)
Type III	Turbo supercharger type

2. APPLICABLE DOCUMENTS

2.1 The following specifications, standard, drawing, and publication, of the issue in effect on date of invitation for bids, form a part of this specification to the extent specified herein:

SPECIFICATIONS

Federal

NN-P-515	Plywood, Container Grade
PPP-B-601	Boxes, Wood, Cleated-Plywood

Military

JAN-P-106	Packaging and Packing for Overseas Shipment - Boxes; Wood, Nailed
JAN-P-108	Packaging and Packing for Overseas Shipment - Boxes, Fiberboard (V-Board and W-Board), Exterior and Interior
MIL-B-121	Barrier Material, Greaseproofed, Flexible (Waterproofed)
JAN-P-125	Packaging and Packing for Overseas Shipment - Barrier-Materials, Waterproof, Flexible
MIL-D-5028	Drawings and Data Lists: Preparation of Manufacturers' (for Production Aircraft, Guided Missiles, Engines, Accessories, and Other Auxiliary Equipment)

FSC 1560

MIL-S-6721	Steel, Corrosion- and Heat-Resistant (18-8 Stabilized) Plate, Sheet, and Strip (for Aircraft Applications)
MIL-N-6840	Nickel-Chromium-Iron-Alloy; Plate, Sheet, and Strip
MIL-P-7105	Pipe Threads, Taper, Aeronautical National Form, Symbol ANPT
MIL-S-7742	Screw Threads, Standard, Aeronautical

STANDARDS

Military

MIL-STD-129	Marking for Shipment and Storage

DRAWINGS

Air Force-Navy Aeronautical Standard Drawing

AND10398	Metals - Definition of Dissimilar

PUBLICATIONS

Air Force-Navy Aeronautical Bulletin

No. 143	Specifications and Standards; Use of

(Copies of specifications, standards, drawings, and publications required by contractors in connection with specific procurement functions should be obtained from the procuring activity or as directed by the contracting officer.)

3. REQUIREMENTS

3.1 Approval for production.- The flame dampers furnished under this specification shall be of a design, model, or type which has satisfactorily passed the Preproduction tests.

3.2 Materials.-

3.2.1 Materials used in the manufacture of flame dampers shall be of high quality, suitable for the purpose, and shall conform to the applicable Government specifications. Materials and processes conforming to the contractor's specifications may be used provided the specifications are approved by the Government. The use of contractor's specifications will not constitute waiver of Government inspection.

3.2.2 Where practicable, all materials used in the construction of exhaust flame dampers shall be of austenitic corrosion- and heat-resistant steel possessing stabilizing elements or equivalent, as specified in Specification MIL-S-6721 or MIL-N-6840. The use of dissimilar metals, especially brass, copper, or steel, in intimate metal-to-metal contact with aluminum or aluminum alloy shall be avoided wherever practicable. Dissimilar metals are defined in Drawing AND10398.

3.2.3 Selection of materials.- Specifications and standards for all materials, parts, and Government certification and approval of processes and equipment, which are not specifically designated herein and which are necessary for the execution of this specification, shall be selected in accordance with ANA Bulletin No. 143, except as provided in the following paragraph.

3.2.3.1 Standard parts.- Standard parts (MS, AN, or JAN) shall be used wherever they are suitable for the purpose, and shall be identified on the drawing by their part numbers. Commercial utility parts such as screws, bolts, nuts, cotter pins, etc, may be used, provided they possess suitable properties and are replaceable by the standard parts (MS, AN, or JAN) without alteration, and provided the corresponding standard part numbers are referenced in the parts list and, if practicable, on the contractor's drawings. In the event there is no suitable corresponding standard part in effect on date of invitation for bids, commercial parts may be used provided they conform to all requirements of this specification.

3.3 Design and construction.- Flame dampers shall consist of all parts necessary for a complete installation on the airplane specified in the contract or order. The design of detachable flame dampers shall not necessitate modification of the engine cowling installation, except for slight alterations which can be made by operating units. The installation shall not interfere with the operation of starter hand cranks or any other accessories in the vicinity. Exhaust gases shall be discharged clear of the airplane, so that CO concentration in the crew spaces shall be limited to 0.01 percent. All joints shall be made sufficiently gastight to prevent combustion caused by air leakage. Exhaust flame dampers shall be constructed to withstand the strains, jars, vibrations, and other conditions incident to shipping, storage, installation, and service.

3.3.1 Threads.-

3.3.1.1 Screw threads.- Screw threads shall conform to Specification MIL-S-7742, class 3 fit.

3.3.1.2 Pipe threads.- Pipe threads shall conform to Specification MIL-P-7105.

3.3.1.3 Locking threaded parts.- All internal or external parts shall be positively locked or safetied.

3.3.2 Protective treatment.- All flame damping equipment fabricated from corrosion-resistant steel shall be sandblasted.

3.3.3 Heat treatment.- All flame dampers shall be supplied in a stress-free and thermal-stabilized condition.

3.3.4 Service life.- The service life of flame damping equipment shall be equal to at least one-half of the operating time between engine overhauls.

3.3.5 Detachability.-

3.3.5.1 Type I.- It is preferred that flame damping be inherent in the design of individual stacks.

3.3.5.2 Type II.- Detachable-type flame dampers shall be of such design that airplanes may be operated without the flame dampers. The design shall be such that the installation or removal of this type of flame damper can be accomplished in 1 man-hour per engine. If this requirement for detachability cannot be met, the performance loss shall not exceed that allowed for non-detachable-type flame damping installations.

3.3.5.3 Type III.- Turbo-supercharger-type flame dampers shall be removable, in order that the airplane may be operated satisfactorily with the conventional non-flame-damped exhaust system. The design shall be such that the installation or removal of this type of flame damper can be accomplished in 2 man-hours per engine.

3.4 Interchangeability.- All parts of the same manufacturer's part number shall be directly and completely interchangeable with each other with respect to installation and performance. Changes in manufacturer's part numbers shall be governed by the drawing number requirements of Specification MIL-D-5028, or as otherwise specified by the procuring activity.

3.5 Performance.-

3.5.1 Aircraft.- The performance loss of the airplane and engine with the flame damper installation compared to that without the flame damper installation shall not exceed that listed in table I.

TABLE I

Aircraft performance loss

Type	Percent loss takeoff power	Percent loss in V_{max} at military, 65 percent normal rated power and lowest military critical altitude (10,000 ft for turbo superchargers)	Percent loss in critical altitude
I	2	1	- - -
II	2	3	- - -
III	2	5	5

3.5.2 Flame damper.-

3.5.2.1 Exhaust glare suppression.- The design of the exhaust system and any flame-damping equipment of all military aircraft shall be such as to prevent interference with the night vision of the pilot and crew members whose duties require observation outside the aircraft. Particular attention should be given to the elimination of exhaust glare reflection from the propeller and the windshield, and for carrier-type aircraft to carrier landing conditions as well as normal landing conditions.

3.5.2.2 Exhaust visibility suppression.- The visibility of any light originating from the exhaust system of an airplane on a dark night, under any engine operating conditions, shall be not more than that listed in table II.

TABLE II

Exhaust visibility suppression

Type aircraft		Visibility distance
Air Force	Navy	
Night fighter Night attack	Night fighter Night attack - bomber Night attack - torpedo	200 yards all around
Multiengine bomber cargo and transport	Patrol and patrol bomber	400 yards upper hemisphere 200 yards lower hemisphere
---	Day carrier based and observation	2,000 yards all around
Day fighter and attack	---	200 yards front hemisphere 2,000 yards rear hemisphere

3.6 Identification of product.- All marking shall be permanent and legible.

3.6.1 Part number.- Each part and assembly shall be marked with a part number which shall be the same as the manufacturer's drawing numbers, except the following:

(a) Parts or assemblies which do not have a suitable or sufficient surface for a part number.

(b) Parts or assemblies which are permanently assembled by welding, brazing, soldering, or riveting. These shall carry the assembly part number.

3.6.1.1 The part number shall, where practicable, be located to permit being read after assembly in the complete unit.

3.7 Workmanship.- All details of workmanship shall be in accordance with high-grade aircraft manufacturing practice covering this type of equipment.

4. QUALITY ASSURANCE PROVISIONS

4.1 Classification of tests.- The inspection and testing of flame dampers shall be classified as follows:

(a) Preproduction tests: Preproduction tests are those tests performed on samples to ascertain that the design, model, or type is capable of complying with the specified performance requirements and is suitable for volume production.

(b) Acceptance tests: Acceptance tests are those tests performed on individual lots which have been submitted for acceptance.

4.2 Test conditions.- Unless otherwise specified by the procuring activity, the following test conditions shall apply during the tests.

4.2.1 Weather.- Flame damping observations shall be made on a dark moonless night.

4.3 Preproduction tests.-

4.3.1 Sampling instructions.- The preproduction sample shall consist of one complete exhaust flame damper representative of the production of dampers, and shall be tested in a place and manner designated in the contract, purchase order, or invitation for bids. (See 6.2.1.)

4.3.2 Tests.- The Preproduction tests of flame dampers shall consist of all the tests specified under Acceptance tests and, in addition, the following tests.

4.3.2.1 Air-to-air.-

4.3.2.1.1 Method of observations.- Observations shall be made visually by observers from an accompanying airplane, preferably a fast bomber. If the contractor's plant is near the coast, the observation shall be conducted over the ocean with the observers looking out to sea. If the plant is located inland, the observations shall be made against a dark background outside the influence of ground lights. Unless otherwise authorized by the procuring activity, the observing airplane shall be faster than the

airplane being tested. The observer shall use a distance measuring device for determination of all distances less than 500 yards from which any light from the exhaust system is visible. Distances greater than 500 yards may be obtained by estimation. The method used in determining visible distance shall be by one of the following procedures.

4.3.2.1.1.1 Where the observing airplane can overtake the test airplane, the distance that any light from the exhaust system can be seen shall be determined by the observer airplane approaching and passing the observed airplane and the determination made at the point where the light appears or disappears.

4.3.2.1.1.2 Where the test airplane is faster than the observing airplane, the distance that any light from the exhaust system can be seen shall be determined by the test airplane approaching and passing the observer airplane and the determination made at the point where the light appears or disappears. Each flight of this type shall be repeated at least once.

4.3.2.1.2 Distance measuring device.- The device used for determination of the distance between the observer and the observed airplane shall be acceptable to the procuring activity. Radar equipment is preferred; however, triangulation devices, such as shown in figure 1, may be used.

4.3.2.1.3 Operating instructions for distance measuring device shown in figure 1.- The measuring device operates on the principle of proportional triangles; the known distance between the wingtip lights is the base of one triangle, and the known distance between the two posts on the measuring device is the base of the other triangle; therefore, the distance from the eye to the two posts is proportional to the distance to the observed airplane, as the distance between the two posts is proportional to the distance between the wingtip lights. The device is used by placing the flat end against the cheekbone with the eye equidistant from the two posts, and then moving the slide until the luminous beads on the post are lined up with the wingtip lights on the test airplane. The distance to the test airplane may then be read from the proper scale on the flat piece.

4.3.2.1.4 Instrumentation.- Standard flight instruments shall be used. The accompanying airplane shall also be equipped with a suitable distance measuring device.

4.3.2.1.5 Procedure.- The tests shall be as follows:

(a) The test airplane shall fly level at the lowest military power critical altitude and at the following engine powers:

(1) Military power.
(2) Normal rated power.
(3) 65 percent normal rated power.
(4) 50 percent normal rated power.

NOTE: Mixture setting for the above powers shall be the normal setting for the above powers. Manifold pressure and rpm for the above powers shall be in conformance with engine operating instructions established or released by the testing activity.

(b) The observing airplane shall determine the maximum exhaust flame visibility distance of the test airplane from ahead, behind, above, below, the sides, and any intermediate angles necessary for a complete visibility survey at each of the above power conditions.

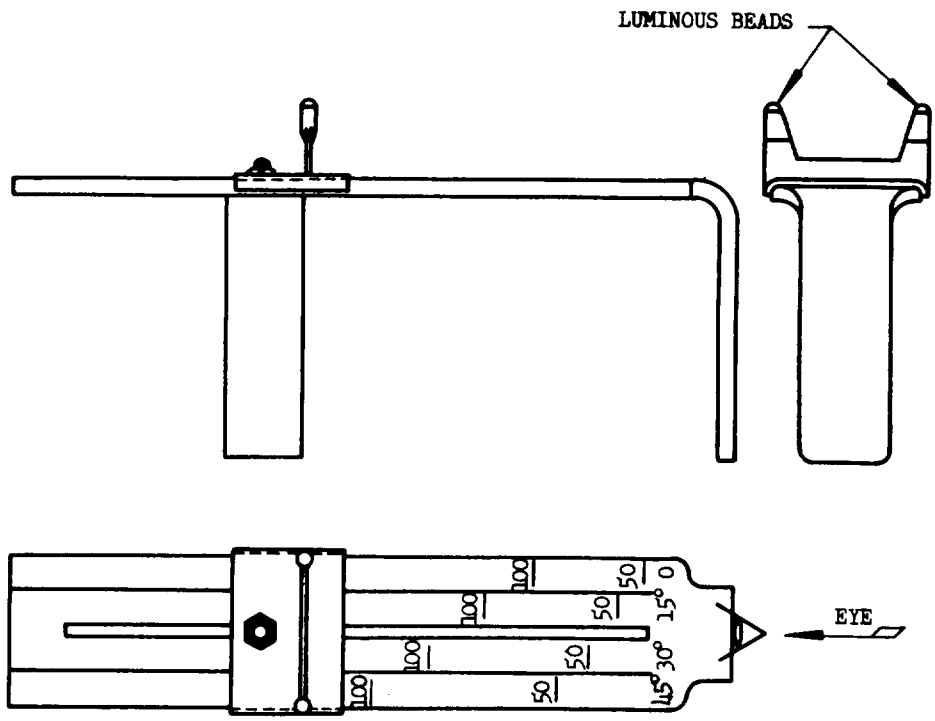

THE SCALE FROM WHICH THE DISTANCE IS READ IS DETERMINED BY THE ESTIMATED ANGLE BETWEEN THE TWO PLANES AS SHOWN BELOW

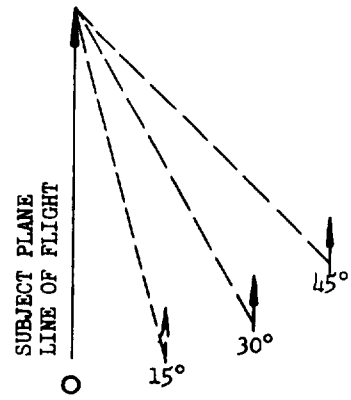

FIGURE 1. Distance measuring device

4.3.2.1.6 Data.- The test airplane shall record IAS, altitude, manifold pressure, and engine rpm for each power condition. The observing airplane shall record maximum exhaust flame visibility distance from each position of observation for each test. The report of these tests shall also include a description of the test conditions indicating conformance with the requirements of Air-to-air observation.

4.3.2.2 Ground-to-air.-

4.3.2.2.1 Instrumentation.- Standard flight instruments shall be used.

4.3.2.2.2 Procedure.- The test shall be as follows:

(a) The test airplane shall be flown over ground observers at the altitude specified as the minimum permissible visibility distance for the lower or front hemisphere in table II, and at the following engine powers:

(1) Military power.
(2) Normal rated power.
(3) 65 percent normal rated power.
(4) 50 percent normal rated power.

NOTE: Mixture setting for the above powers shall be the normal setting for the above powers. Manifold pressure and rpm for the above powers shall be in conformance with engine operating instructions established or released by the testing activity.

(b) Ground observers from a darkened field shall determine whether the exhaust system of the test airplane can be seen as the test airplane passes overhead.

NOTE: Radio contact between the ground observers and the test airplane should be maintained. If radio contact is impracticable a prearranged signal light system may be used to inform the ground observers of the particular test run and power setting.

4.3.2.2.3 Data.- The ground observers shall record whether the exhaust system is visible for each test and shall include a description of the test conditions indicating conformance with the requirements of Ground-to-air observation.

4.3.2.3 Exhaust glare.- The glare from the exhaust system of military aircraft shall not interfere with the night vision of the pilot and crew members whose duties require observation outside the aircraft.

4.3.2.3.1 Test conditions.- The tests listed below shall be conducted on all military aircraft. If special flame damping equipment is provided, the test shall be conducted both with and without the flame damping equipment installed.

4.3.2.3.2 Instrumentation.- Standard flight instruments shall be used.

4.3.2.3.3 Procedure.- The test shall be as follows:

(a) The necessary flight tests shall be conducted at night to determine the effect of exhaust glare on the pilot's and applicable crew member's night vision as follows:
(1) Night takeoff.
(2) Night landings.
(3) Simulated night formation flight at normal rated, 65 percent normal rated, and 50 percent normal rated power.
(4) Any other night flight condition peculiar to the applicable airplane (night search, night attack, night interception, etc).

4.3.2.3.4 Data.- The effect of exhaust glare on the pilot's and applicable crew member's night vision shall be recorded, for each of the test conditions, as to intensity and acceptability. Particular attention shall be given to exhaust glare from the back of propellers and exhaust glare on the windshields.

4.3.2.4 Performance.- The purpose of the Performance test is to determine the effect of the flame dampers on airplane and engine performance. Performance tests need not be conducted on airplanes in which the flame damping equipment is a permanent configuration of the airplane, i.e., individual exhaust stacks not having detachable dampers, permanently installed turbo supercharger shrouds, permanently installed heat exchanger flame dampers, etc.

4.3.2.4.1 Test conditions.- The tests listed below shall be conducted both with the flame damping equipment installed and removed. Manifold pressure rpm and altitude combinations for the above tests shall be in accordance with engine operating instructions established or released by the testing activity, and shall be duplicated insofar as possible for tests with the dampers installed and removed. Atmospheric conditions shall be duplicated insofar as possible for the tests with dampers installed and removed, but if different, applicable corrections to the test results shall be made.

4.3.2.4.2 Instrumentation.- Instrumentation shall be as required to obtain necessary data.

4.3.2.4.3 Procedure.- The test shall be as follows:

(a) The necessary tests shall be conducted to determine the effect of the flame damper installation on the following:

(1) V_{max} at lowest military power critical altitude (10,000 feet for turbo supercharger installations) at the following powers:

(a) Military power.
(b) 65 percent normal rated power.

(2) Torquemeter power output (takeoff, normal rated, 65 percent normal rated power) at lowest military power critical altitude.
(3) Engine cooling (hottest head and base cylinder temperatures).
(4) Critical altitude (heat exchanger flame dampers in combination with turbo superchargers only).

4.3.2.4.4 Data.- The following data for each test condition shall be recorded:

(a) Pressure altitude.
(b) OAT.
(c) CAT.
(d) Torquemeter reading.
(e) Hottest cylinder head and base temperature.
(f) IAS.
(g) Manifold pressure.
(h) Engine rpm.
(i) Turbo rpm.

4.4 Acceptance tests.- The Acceptance tests shall consist of Examination of product, and as specified in 4.4.2.

4.4.1 Examination of product.- Each exhaust flame damper shall be examined to determine general conformance to this specification with respect to material, workmanship, design, and construction.

4.4.2 In addition, flame dampers may be subject to any other tests specified herein which the Government Inspector considers necessary to determine conformance with the requirements of this specification.

4.4.3 Rejection and retest.- Failure of any engine exhaust flame dampers to conform to any of the requirements of this specification shall be cause for rejection of the dampers represented. Flame dampers which have been rejected may be reworked or have parts replaced to correct the defects in the original and resubmitted for acceptance. Before resubmitting, full particulars concerning previous rejection and the action taken to correct the defects found in the original shall be furnished the Inspector. Units rejected after retest shall not be resubmitted without the specific approval of the procuring activity.

5. PREPARATION FOR DELIVERY

5.1 Application.- The requirements of section 5 apply only to direct purchases by or direct shipments to the Government.

5.2 Packaging.- Each damper shall be wrapped in grade A paper conforming to Specification MIL-B-121. Unless otherwise specified, each damper, after wrapping, shall be securely packaged within a fiberboard carton in accordance with Specification JAN-P-108.

5.3 Packing.- Unless otherwise specified, all items shall be packed for domestic shipment. Each shipping container, insofar as possible, shall contain the same number of articles, shall be uniform in size, and snugly packed. The gross weight of the fully packed shipping container shall not exceed approximately 200 pounds.

5.3.1 Domestic packing.- Unless otherwise specified, for domestic shipment, interior packages shall be packed in substantial commercial containers so constructed as to insure acceptance by common or other carrier for safe transportation, at the lowest rate, to the point of delivery. Except as specified herein, the container shall conform to the requirements of Consolidated Freight Classification Rules in effect at the time of shipment, except that fiberboard, when used, shall have a minimum Mullen test of 275 pounds. Containers shall be able to withstand storage, rehandling, and reshipment without the necessity of repacking.

5.3.2 Overseas packing.- Unless otherwise specified for overseas shipment, the interior packages shall be packed in a shipping container constructed in accordance with Specification PPP-B-601 or JAN-P-106. All plywood used shall conform to Specification NN-P-515, type II, class 2, or better. Waterproof liners conforming to Specification JAN-P-125 shall be placed in all shipping containers constructed in accordance with Specification JAN-P-106.

5.4 Marking of shipments.- Interior packages and exterior shipping containers shall be marked in accordance with Standard MIL-STD-129. The identification shall be composed of the following information listed in the order shown:

Stock No. or other identification number as specified
in the purchase document*
DAMPERS; ENGINE EXHAUST FLAME AND GLARE
Specification MIL-D-6728A
Manufacturer's Part No.
Manufacturer's Serial No.
Name of manufacturer
Name of contractor (if different from manufacturer)
Contract or Order No.

*NOTE: The contractor shall enter the Federal Stock No. specified in the purchase document or as furnished by the procuring activity. When the Federal Stock No. is not provided or available from the procuring activity, leave space therefor and enter the Stock No. or other identification as provided by the procuring activity.

6. NOTES

6.1 Intended use.- Engine exhaust flame dampers covered by this specification are for use on night operational aircraft to make the exhaust flame of the engine invisible to other aircraft.

6.2 Ordering data.- Procurement documents should specify the following:

(a) Title, number, and date of this specification.
(b) Type of damper required. (See 1.2.)
(c) Quantity.
(d) Whether overseas packing is required. (See 5.3.)

6.2.1 Preproduction tests.- Contracts, purchase orders, and invitations for bids should specify where the Preproduction test samples should be sent, the activity responsible for testing, and instructions concerning the submittal of the test reports.

Custodians:
Army - Transportation Corps
Navy - Bureau of Aeronautics
Air Force

Preparing activity:
Air Force

SPECIFICATION ANALYSIS SHEET

Form Approved
Budget Bureau No. 119-R004

INSTRUCTIONS

This sheet is to be filled out by personnel either Government or contractor, involved in the use of the specification in procurement of products for ultimate use by the Department of Defense. This sheet is provided for obtaining information on the use of this specification which will insure that suitable products can be procured with a minimum amount of delay and at the least cost. Comments and the return of this form will be appreciated. Fold on lines on reverse side, staple in corner, and send to preparing activity *(as indicated on reverse hereof)*.

SPECIFICATION

ORGANIZATION *(Of submitter)*

CITY AND STATE

CONTRACT NO.

QUANTITY OF ITEMS PROCURED

DOLLAR AMOUNT
$

MATERIAL PROCURED UNDER A

☐ DIRECT GOVERNMENT CONTRACT ☐ SUBCONTRACT

1. HAS ANY PART OF THE SPECIFICATION CREATED PROBLEMS OR REQUIRED INTERPRETATION IN PROCUREMENT USE?

A. GIVE PARAGRAPH NUMBER AND WORDING.

B. RECOMMENDATIONS FOR CORRECTING THE DEFICIENCIES.

2. COMMENTS ON ANY SPECIFICATION REQUIREMENT CONSIDERED TOO RIGID

3. IS THE SPECIFICATION RESTRICTIVE?

☐ YES ☐ NO IF "YES", IN WHAT WAY?

4. REMARKS *(Attach any pertinent data which may be of use in improving this specification. If there are additional papers, attach to form and place both in an envelope addressed to preparing activity)*

SUBMITTED BY *(Printed or typed name and activity)*

DATE

DD FORM 1 APR 63 1426

REPLACES NAVSHIPS FORM 4863, WHICH IS OBSOLETE

PLATE NO. 15419

FOLD

DEPARTMENT OF THE NAVY

POSTAGE AND FEES PAID
NAVY DEPARTMENT

OFFICIAL BUSINESS

COMMANDER
SAN ANTONIO AIR MATERIEL AREA
ATTN: SANSS
KELLY AFB, TEXAS 78241

FOLD

PLATE NO. 15419 (BACK)