Downloaded from http://www.everyspec.com

INCH-POUND

MIL-D-43703C
3 January 1994
SUPERSEDING
MIL-D-43703B
10 August 1977

MILITARY SPECIFICATION

DRUM, SHIPPING AND STORAGE, MOLDED POLYETHYLENE

This specification is approved for use by all Departments and Agencies of the Department of Defense.

1. SCOPE

1.1 Scope. This specification covers self supporting, molded polyethylene, tight head drums for surface and air shipment of military supplies.

1.2 Classification. The drums shall be of the following rated sizes as specified (see 6.2):

Size 1 - 5 gallon (19 L) (see 6.3)
Size 2 - 15 gallon (57 L)
Size 3 - 30 gallon (114 L)
Size 4 - 55 gallon (208 L)

2. APPLICABLE DOCUMENTS

2.1 Government documents.

2.1.1 Specifications, standards, and handbooks. The following specifications, standards, and handbooks form a part of this document to the extent specified herein. Unless otherwise specified, the issues of these documents are those listed in the issue of the Department of Defense Index of Specifications and Standards (DODISS) and supplement thereto, cited in the solicitation (see 6.2).

Beneficial comments (recommendations, additions, deletions) and any pertinent data which may be used in improving this document should be addressed to: U.S. Army Natick Research, Development, and Engineering Center, Natick, MA 01760-5019 by using the Standardization Document Improvement Proposal (DD Form 1426) appearing at the end of this document or by letter.

AMSC N/A FSC 8110

DISTRIBUTION STATEMENT A. Approved for public release; distribution is unlimited.

Downloaded from http://www.everyspec.com

STANDARD

MILITARY

MIL-STD-105	-	Sampling Procedures and Tables for Inspection by Attributes
MIL-STD-129	-	Marking for Shipment and Storage
MIL-STD-147	-	Palletized Unit Loads

LAWS AND REGULATIONS

21 CFR 121	-	Federal Food, Drug, and Cosmetic Act and Regulations Promulgated Thereunder
49 CFR 173	-	Shippers - General Requirements for Shipments and Packagings
49 CFR 178	-	Specifications for Packaging

(The Code of Federal Regulations (CFR) and the Federal Register (FR) are for sale on a subscription basis by the Superintendent of Documents, U.S. Government Printing Office, Washington, DC 20402. When indicated, reprints of certain regulations may be obtained from the Federal agency responsible for the issuance thereof.)

2.2 Non-Government publications. The following documents form a part of this document to the extent specified herein. Unless otherwise specified, the issues of the documents which are DoD adopted are those listed in the issue of the DODISS cited in the solicitation. Unless otherwise specified, the issues of documents not listed in the DODISS are the issues of the documents cited in the solicitation (see 6.2).

AMERICAN SOCIETY FOR TESTING AND MATERIALS (ASTM)

D 3951	-	Standard Practice for Commercial Packaging
D 4919	-	Standard Specification for Testing of Hazardous Materials Packagings

(Application for copies should be addressed to the American Society for Testing and Materials, 1916 Race Street, Philadelphia, PA 19103-1187.)

NSF INTERNATIONAL

Standard Number 2	-	Food Service Equipment
Standard Number 51	-	Plastics Materials and Components Used in Food Service Equipment

(Application for copies should be addressed to NSF International, P.O. Box 130140, 3475 Plymouth, Ann Arbor, MI 48113-6014.)

Downloaded from http://www.everyspec.com

(Non-Government standards and other publications are normally available from the organizations that prepare or distribute the documents. These documents also may be available in or through libraries or other informational services.)

2.3 Order of precedence. In the event of a conflict between the text of this document and the references cited herein, the text of this document takes precedence. Nothing in this document, however, supersedes applicable laws and regulations unless a specific exemption has been obtained.

3. REQUIREMENTS

3.1 Materials. Drums shall conform to 49 CFR 173.24 and 178.509 type 1H1. The drum material and components shall conform to the Federal Food, Drug and Cosmetic Act, Food Additive Amendment 21 CFR 121.2514 and NSF International Standards No. 2 and 51 when used for food products. It is encouraged that recycled material be used when practical as long as it meets the requirements of this specification.

3.2 Design and construction. Drums shall conform to 49 CFR 173.24 and 178.509, type 1H1. Drums shall be molded of materials specified in 3.1. Five gallon (19 L) drums shall be furnished with one or two carrying handles. Fifteen gallon (57 L) drums shall be furnished with one or two handles on the top or without handles. Thirty gallon (114 L) and 55 gallon (208 L) drums shall be fabricated with indented or recessed side walls or with special formed chimes. Handling devices shall withstand the combined lifted weight of the drum and contents. Rolling rings on drums are optional, and when specified (see 6.2), a minimum of two are required. The design and dimensions shown on figures 1 and 2 are for 15 gallon (57 L) cylindrical drums with rolling rings, are approximate, and are to be used as a guide only.

3.2.1 Openings. The 5 gallon (19 L) drum shall have one opening on the top except when specified (see 6.2) an air vent shall be added diametrically opposite the top opening. The 15 gallon, 30 gallon, and 55 gallon (57 L, 114 L, and 208 L) drums shall have two openings. The opening shall not exceed 2.7 inches (69 mm) in diameter, and when specified (see 6.2) shall have either a commercial clinch-on closure (flexible or reversible spout) or molded-in opening. The molded-in opening for the 5 gallon (19 L) drum shall be externally threaded to accept a buttress threaded cap closure, or when specified (see 6.2) an internally threaded opening to accept an NPS plug. The molded-in opening for the 15 gallon, 30 gallon, and 55 gallon (57 L, 114 L, and 208 L) drums shall have molded-in internal NPS or buttress threads (see 3.2.1.1). There shall be not less than two and one-half buttress threads. The closure for flexible spout shall be a metal or plastic screw cap or plug having not less than two continuous full threads that match the spout and of sufficient length to completely engage a minimum of two threads when the cap with gasket or cap liner in place is screwed in.

Downloaded from http://www.everyspec.com

3.2.1.1 Plug and gasket. The buttress plug and gasket shall be made of material resistant to the lading and shall have not less than two continuous external buttress threads that match the internal thread of the opening. The plug shall have a 3/4 inch (20 mm) NPS center reducer with molded-in diaphragm. The 3/4 inch (20 mm) center reducer without molded diaphragm shall accept a 3/4 inch (20 mm) NPT plug for nonhazardous commodities (see 6.2). Vented closure devices shall be used for surface shipments only.

3.2.1.2 Spigot and twine. When drums are used for food products, they shall be provided with a polyethylene spigot and a spigot carrying plug or a length of polyethylene twine for attachment to the drum when a nonspigot carrying plug closure is furnished. The spigot shall have a threaded portion matching the 3/4 inch (20 mm) threaded hole in the plug. The polyethylene twine shall be not less than 18 inches (457 mm) long. Twine must be approved for food contact by FDA and NSF International.

3.2.1.2.1 Safety seals. When specified (see 6.2), commercial safety seals shall be furnished with each drum for application to all openings of the drum. The safety seals shall either be fabricated from a corrosion-resistant metal, or be coated with a corrosion-resistant finish. The safety seals shall be crimped onto the drums in such a manner that the seals are deformed and cannot be reused once they have been removed. The safety seals shall have instructions printed on them that describe the method of removal. Safety seals on drums containing food or potable water must be approved by FDA or NSF International.

3.2.1.3 Torque indicating or torque limiting plug wrench. When specified (see 6.2), a commercial torque indicating or torque limiting plug wrench made to fit the drum plugs shall be provided.

3.3 Marking. Drum markings shall conform to 49 CFR Subpart L, MIL-STD-129, and NSF International Standards No. 2 and 51, as appropriate. Also, the manufacturer's recommended closure torque range for prevention of leakage from threaded closure shall be durably marked by means of embossing, labeling, stenciling, lithographing, silk screening or stamping on the drum. Unless otherwise specified (see 6.2), the markings shall be embossed on the bottom head of the drum in characters not less than 1/2 inch (13 mm) high. Unless otherwise specified (see 6.2), the top head of each drum shall be marked "NOT FOR FOOD USE". The marking shall be embossed or indelibly stenciled in a contrasting color in capital letters not less than 1/2 inch (13 mm) high.

3.4 Capacity. The minimum actual capacity shall be not less than rated capacity plus 4 percent. The maximum actual capacity shall be not greater than the applicable rated capacity (see 1.2) plus 15 percent for 5 gallon (19 L) drums and shall not be greater than rated capacity plus 10 percent for drums, 15 gallons (57 L) and over.

Downloaded from http://www.everyspec.com

3.5 Performance. In addition to the requirements specified herein, drums shall not show cracks or leaks when subjected to tests specified in 4.2.5. Drums with repaired bodies and components shall not be acceptable.

3.6 Workmanship. The finished drums shall be free of lumps, blisters, or flash. The threads of the openings and plugs shall be clean, well formed, free of excess flash, and distortion. The seal of the openings and plugs shall be smooth and free of defects that may affect the closure. The color shall be uniform. The drum interior shall be clean and free of foreign matter. The caps and spouts shall be clean, free of excess flash or metal, and distortion.

4. QUALITY ASSURANCE PROVISIONS

4.1 Responsibility for inspection. Unless otherwise specified in the contract or purchase order, the contractor is responsible for the performance of all inspection requirements (examinations and tests) as specified herein. Except as otherwise specified in the contract or purchase order, the contractor may use his own or any other facilities suitable for the performance of the inspection requirements specified herein, unless disapproved by the Government. The Government reserves the right to perform any of the inspections set forth in this specification where such inspections are deemed necessary to ensure supplies and services conform to prescribed requirements.

4.1.1 Responsibility for compliance. All items shall meet all requirements of sections 3 and 5. The inspection set forth in this specification shall become a part of the contractor's overall inspection system or quality program. The absence of any inspection requirements in the specification shall not relieve the contractor of the responsibility of ensuring that all products or supplies submitted to the Government for acceptance comply with all requirements of the contract. Sampling inspection, as part of manufacturing operations, is an acceptable practice to ascertain conformance to requirements, however, this does not authorize submission of known defective material, either indicated or actual, nor does it commit the Government to accept defective material.

4.1.2 Certification of compliance. Certificates of compliance, certified test reports, approval labels or listing marks for codes and standards, as applicable, that are submitted as proof of conformance with the specification requirements shall be examined and validated. When certificates of compliance are submitted, the Government reserves the right to inspect such items to determine the validity of the certification.

4.2 Quality conformance inspection. Unless otherwise specified, sampling for inspection shall be performed in accordance with MIL-STD-105.

Downloaded from http://www.everyspec.com

4.2.1 Component and material inspection. In accordance with 4.1, components and materials shall be inspected in accordance with all the requirements of referenced documents unless otherwise excluded, amended, modified, or qualified in this specification or applicable purchase document.

4.2.2 In-process inspection. Inspection of subassemblies shall be made to ascertain that construction details which cannot be examined in the finished product are in accordance with specified requirements. The Government reserves the right to exclude from consideration for acceptance, any material or service for which in-process inspection has indicated nonconformance.

4.2.3 End item visual examination. The end items shall be examined for the defects listed in table I. The lot size shall be expressed in units of drums of one size. The sample unit shall be one drum. The inspection level shall be II and the acceptable quality level (AQL), expressed in terms of defects per hundred units, shall be 2.5 for major defects and 6.5 for total (major and minor combined) defects.

TABLE I. End item visual defects

Examine	Defect	Classification Major	Minor
Design	Not one piece body	101	
	Less than two openings (15, 30, and 55 gallon) (57 L, 114 L, and 208 L)	102	
	No stacking provisions on top or bottom	103	
	Handles not as specified when furnished	104	
	Handles not on top of the unit when specified	105	
Opening and plugs	Threads not furnished	106	
	Threads not continuous	107	
	Plug material not resistant to lading	108	
	Plug threads do not match opening threads	109	
	Not a combination plug and adapter (15, 30, and 55 gallon drums) (57 L, 114 L, and 208 L)	110	
	Adapter 3/4 thread not as specified (15, 30, and 55 gallon drums) (57 L, 114 L, and 208 L)	111	
	Sealing surfaces not smooth enough to affect seal	112	
	Air vent (5 gallon (19 L) drum) not diametrically opposite top opening	113	

Downloaded from http://www.everyspec.com

TABLE I. End item visual defects (cont'd)

Examine	Defect	Classification Major	Minor
Gasket	Not as specified	114	
	Missing	115	
	Damaged	116	
Spigot and polyethylene twine	Missing or not as specified	117	
Plug wrench, torque indicating or torque limiting (when required)	Missing, does not fit drum plug	118	
Marking	Missing, illegible, not as specified	119	
Workmanship	Lumps, blisters, and flash		201
	Thread openings and plugs not free of foreign matter and excess flash	120	
	Reduced area or distorted threads	121	
	Seat of opening or plugs not smooth	122	
	Color not uniform		202
	Interior and exterior not free of foreign matter		203
	Flexible caps and spouts not free of distortion		204

4.2.4 End item dimensional and capacity examination. The end items shall be examined for conformance to the specified dimensions and for capacity. Any dimension not within the specified tolerance or any drum not meeting its capacity as specified in 3.4, shall be classified as a defect. The drums shall be examined for capacity in accordance with 4.3.8. The lot size shall be expressed in units of drums of one size. The sample unit shall be one drum. The inspection level shall be S-2 and the AQL, expressed in terms of defects per hundred units, shall be 2.5.

4.2.5 End item testing. Drums shall be selected randomly for testing. Drums shall be subjected to tests specified in 4.3. Testing parameters and failure criteria shall conform to the requirements for Packing Group I of 49 CFR 178, Subpart M.

4.2.6 Packaging examination. The packed end items shall be examined for the defects listed below. The lot size shall be expressed in units of drums. The sample unit shall be one drum marked for delivery. The inspection level shall be S-2 and the AQL, expressed in terms of defects per hundred units, shall be 4.0.

Downloaded from http://www.everyspec.com

Examine	Defect
Marking	Omitted; incomplete; incorrect or illegible; improper size, location, or sequence; improper method of application

4.2.7 Palletization examination. The fully packaged and palletized end items shall be examined for the defects listed below. The lot size shall be expressed in units of palletized unit loads. The sample unit shall be one palletized unit load, fully packaged. The inspection level shall be S-1 and the AQL, expressed in terms of defects per hundred units, shall be 6.5.

Examine	Defect
Finished dimensions	Length, width, or height exceeds specified maximum requirement
Palletization	Load not bonded as specified
Weight	Exceeds maximum load limits
Marking	Omitted; incorrect; illegible; of improper size, location, sequence, or method of application

4.3 Methods of inspection.

4.3.1 Drop test. Drums shall be tested in accordance with 49 CFR 178.603 for Packing Group I.

4.3.2 Leakproofness test. Drums shall be tested for leakproofness in accordance with 49 CFR 178.604 for Packing Group I.

4.3.3 Hydrostatic pressure test. Drums shall be tested in accordance with 49 CFR 178.605 for Packing Group I.

4.3.4 Stacking test. Drums shall be tested in accordance with 49 CFR 178.606.

4.3.5 Handling test. The drum shall be filled with water to 98 percent ± 2 percent of rated capacity. The handling device to be tested shall be used to lift the drum to a height of 3 feet (914 mm), then lowered to the ground. This shall be repeated twice and then held at a height of 3 feet (914 mm) for a period of ten minutes. Failure to comply with the requirements of 3.2 shall be cause for rejection of the item.

4.3.6 Capacity test. The capacity of the drum shall be determined by pouring a measured volume of fresh water into the drum until the specified filled level is attained and record the total volume poured in. To determine the filled level of the drum, pour a measured volume of fresh water equal to

Downloaded from http://www.everyspec.com

the specified capacity into the drum. Observe and record the position of the liquid level. To determine the outage, measure the additional volume of water (Vo) required to completely fill the drum after it is filled to liquid capacity. Calculate the outage using the following formula:

$$\text{Outage in percent of liquid capacity} = \frac{100 \times Vo}{\text{Liquid Capacity}}$$

Failure to comply with the requirements in 3.4 shall be cause for rejection of the item.

5. PACKAGING

5.1 Packing. Packing shall be Commercial.

5.1.1 Commercial packing. Drums shall be packed in accordance with ASTM D 3951.

5.2 Palletization. Drums, packed as specified, shall be palletized on a 4-way entry pallet in accordance with MIL-STD-147. Each prepared load shall be bonded with straps in accordance with bonding means C and D or film bonding means F or G.

5.3 Marking. In addition to any special marking required by the contract or order, shipments shall be marked in accordance with MIL-STD-129 or ASTM D 3951, as applicable.

6. NOTES

(This section contains information of a general or explanatory nature that may be helpful, but is not mandatory.)

6.1 Intended use. The drums covered by this specification are intended to be used for air and surface shipment and storage of regulated and nonregulated liquid products such as potable water (see 6.5).

6.2 Acquisition requirements. Acquisition documents must specify the following:

a. Title, number, and date of this specification.
b. Size required (see 1.2).
c. Issue of DODISS to be cited in the solicitation, and if required, the specific issue of individual documents referenced (see 2.1.1 and 2.2).
d. When ultraviolet light protection is not required (see 3.1).
e. When rolling rings are required (see 3.2).

Downloaded from http://www.everyspec.com

f. When air vent is required for 5 gallon drum (see 3.2.1).
g. Type of closure and internal or external threads required (see 3.2.1).
h. When a 3/4 inch NPT plug is required (see 3.2.1.1).
i. When safety seals are required (see 3.2.1.2.1).
j. When a plug wrench is required (see 3.2.1.3).
k. When special markings are not required (see 3.3).

6.3 Five gallon drum. The 5 gallon (19 L) drum is identified commercially as a pail.

6.4 Subject term (key word) listing.

Barrel
Container

6.5 Changes from previous issue. Marginal notations are not used in this revision to identify changes with respect to the previous issue due to the extensiveness of the changes.

Custodians:

Army - GL
Navy - SA
Air Force - 69

Review activities:

Army - MD, ME, SM
Navy - AS
Air Force - 99
DLA - GS

User activity:

Army - AR

Preparing activity:

Army - GL

(Project 8110-0301)

Downloaded from http://www.everyspec.com

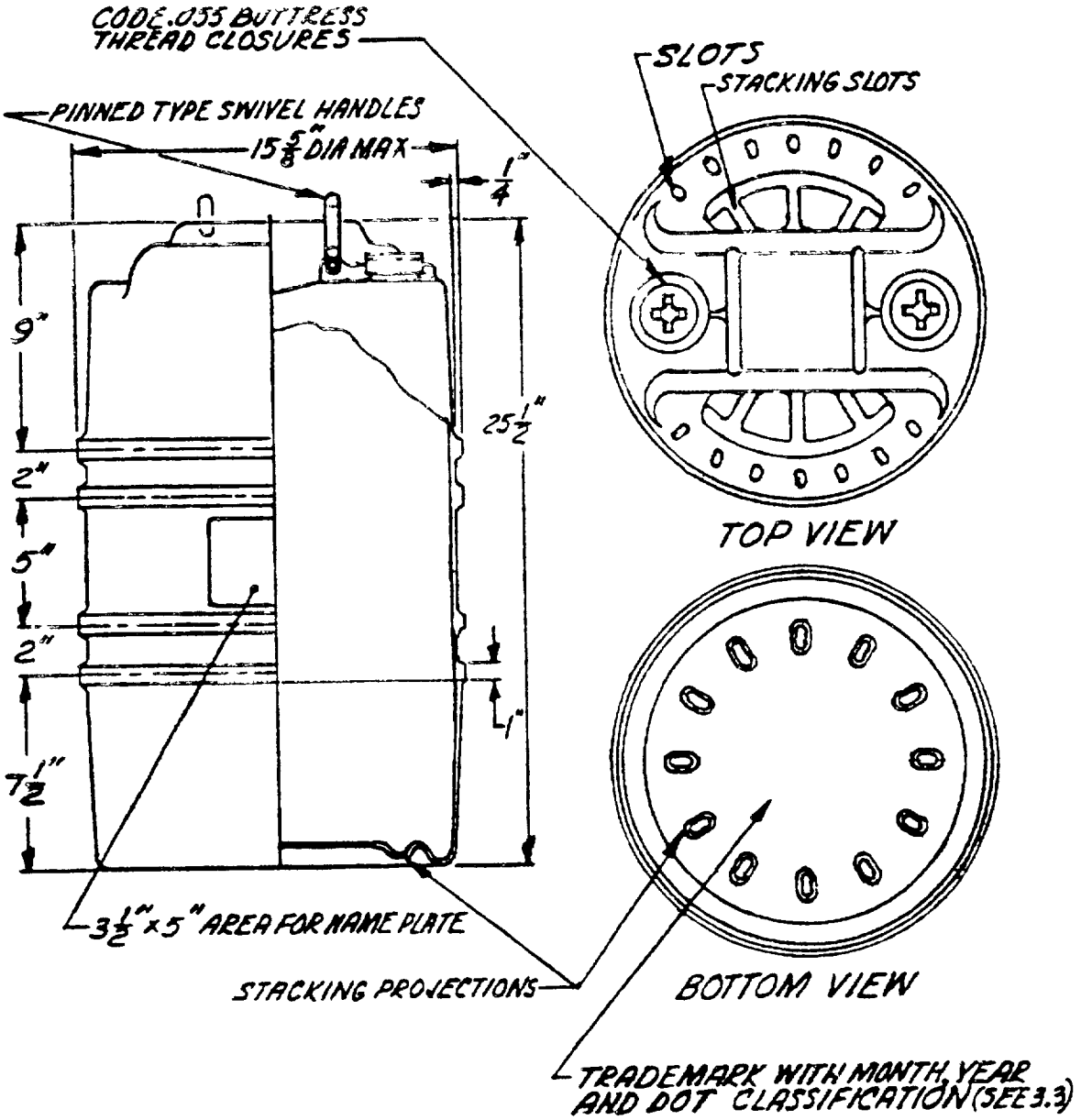

FIGURE 1. 15 GALLON DRUM

Downloaded from http://www.everyspec.com

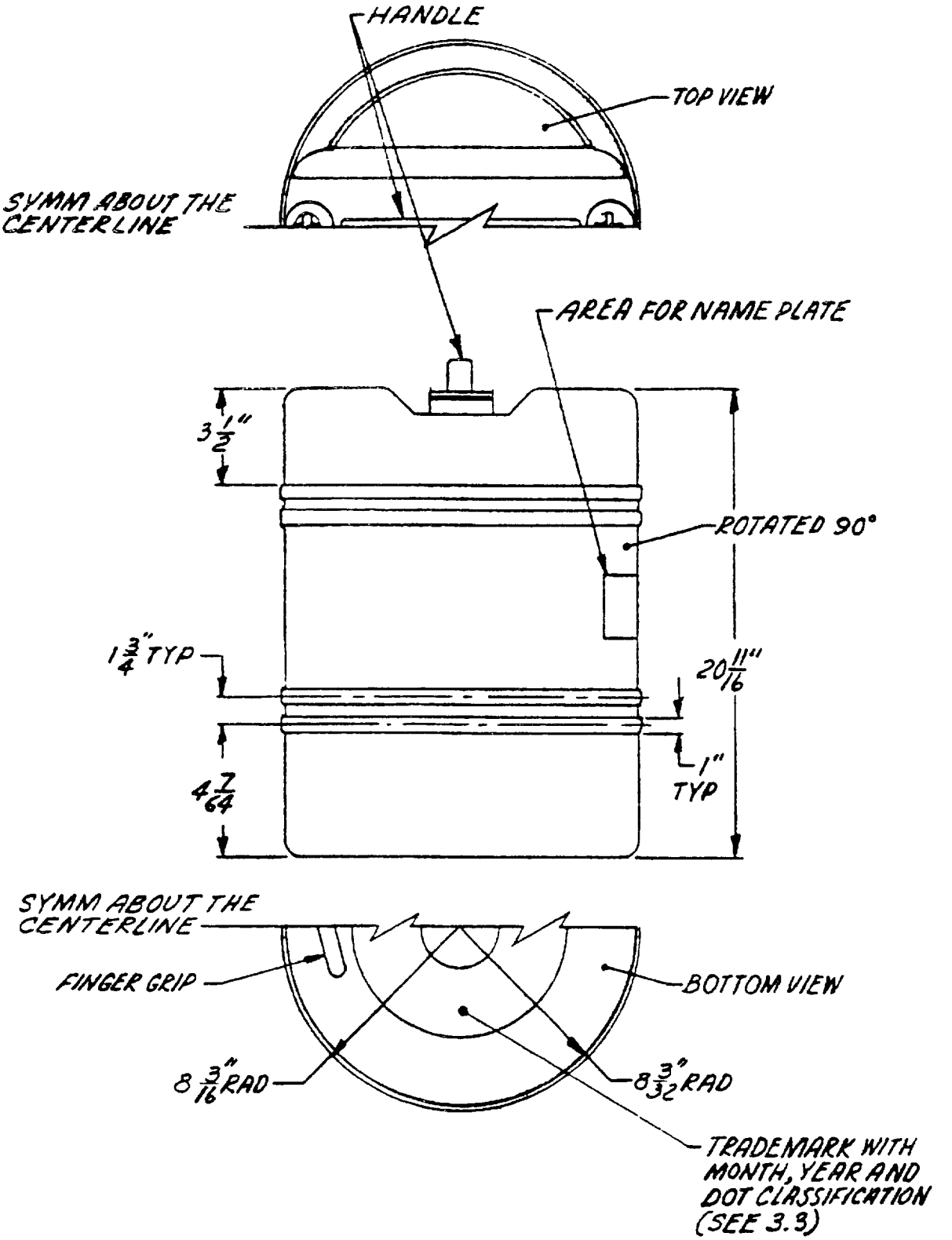

FIGURE 2. 15 GALLON DRUM.

Downloaded from http://www.everyspec.com

STANDARDIZATION DOCUMENT IMPROVEMENT PROPOSAL

INSTRUCTIONS

1. The preparing activity must complete blocks 1, 2, 3, and 8. In block 1, both the document number and revision letter should be given.
2. The submitter of this form must complete blocks 4, 5, 6, and 7.
3. The preparing activity must provide a reply within 30 days from receipt of the form.

NOTE: This form may not be used to request copies of documents, nor to request waivers, or clarification of requirements on current contracts. Comments submitted on this form do not constitute or imply authorization to waive any portion of the referenced document(s) or to amend contractual requirements.

I RECOMMEND A CHANGE:	1. DOCUMENT NUMBER	2. DOCUMENT DATE (YYMMDD)
	MIL-D-43703C	1994 January 3

3. DOCUMENT TITLE

DRUM, SHIPPING AND STORAGE, MOLDED POLYETHYLENE

4. NATURE OF CHANGE (Identify paragraph number and include proposed rewrite, if possible. Attach extra sheets as needed.)

5. REASON FOR RECOMMENDATION

6. SUBMITTER

a. NAME (Last, First, Middle Initial)	b. ORGANIZATION	
c. ADDRESS (Include Zip Code)	d. TELEPHONE (Include Area Code) (1) Commercial (2) AUTOVON (If applicable)	7. DATE SUBMITTED (YYMMDD)

8. PREPARING ACTIVITY

a. NAME	b. TELEPHONE (Include Area Code)	
U.S. Army Natick RD&E Center	(1) Commercial 508-651-4532	(2) AUTOVON/DSN 256-4532
ADDRESS (Include Zip Code) Commander, U.S. Army Natick RD&E Center ATTN: STRNC-IR Natick, MA 01760-5019	IF YOU DO NOT RECEIVE A REPLY WITHIN 45 DAYS, CONTACT: Defense Quality and Standardization Office 5203 Leesburg Pike, Suite 1403, Falls Church, VA 22041 3466 Telephone (703) 756-2340 AUTOVON 289-2340	