MIL-D-43703B

10 August 1977

SUPERSEDING
MIL-D-43703A
13 August 1975

MILITARY SPECIFICATION

DRUMS, SHIPPING AND STORAGE, MOLDED POLYETHYLENE

This specification is approved for use by all Departments and Agencies of the Department of Defense.

1. SCOPE

1.1 Scope. This specification covers self supporting, molded polyethylene, tight head drums for surface and air shipment of Military supplies.

1.2 Classification. The drums shall be of the following rated sizes as specified (see 6.2):

Size 1 - 5 gallon (19 L) (see 6.3)
Size 2 - 15 gallon (57 L)
Size 3 - 30 gallon (114 L)
Size 4 - 55 gallon (208 L)

2. APPLICABLE DOCUMENTS

2.1 Issues of documents. The following documents of this issue in effect on date of invitation for bids or request for proposal, form a part of this specification to the extent specified herein:

Beneficial comments (recommendations, additions, deletions) and any pertinent data which may be of use in improving this document should be addressed to: US Army Natick Research and Development Command, Natick, MA 01760 by using the self-addressed Standardization Document Improvement Proposal (DD Form 1426) appearing at the end of this document or by letter.

FSC 8110

STANDARDS

FEDERAL

FED-STD-101 - Preservation, Packaging and Packing Materials: Test Procedures.

MILITARY

MIL-STD-105 - Sampling Procedures and Tables for Inspection by Attributes

MIL-STD-129 Marking for Shipment and Storage

(Copies of standards required by contractors in connection with specific procurement functions should be obtained from the procuring activity or as directed by the contracting officer.)

CODE OF FEDERAL REGULATIONS

21 CFR 121 Federal Food, Drug, and Cosmetic Act and Regulations Promulgated Thereunder

49 CFR 102.1 Department of Transportation Regulations Part 178D Shipping Container Specifications Specification 34; Reuseable molded polyethylene container for use without overpack, removeable head not authorized

(The Code of Federal Regulations (CFR) and the Federal Register (FR) are for sale on a subscription basis by the Superintendent of Documents, U. S. Government Printing Office, Washington, DC 24040. When indicated, reprints of certain regulations may be obtained from the Federal agency responsible for the issuance thereof).

2.2 Other publications. The following documents form a part of this specification to the extent specified herein. Unless otherwise indicated, the issue in effect on date of invitation for bids or request for proposal shall apply:

AMERICAN SOCIETY FOR TESTING AND MATERIALS (ASTM)

D 638 - Tensile Properties of Plastics

D 1238 - Measuring Flow Rates of Thermoplastics by Extrusion Plastometer

D 1505 - Density of Plastics by the Density-Gradient Technique

(Application for copies should be addressed to American Society for Testing and Materials, 1916 Race Street, Philadelphia, PA 19103.)

NATIONAL MOTOR FREIGHT TRAFFIC ASSOCIATION, INC., AGENT

National Motor Freight Classification

(Application for copies should be addressed to the American Trucking Associations, Inc., Traffic Department, 1616 P Street, N.W., Washington, DC 20036.)

UNIFORM CLASSIFICATION COMMITTEE, AGENT

Uniform Freight Classification

(Application for copies should be addressed to the Uniform Classification Committee, Room 1106, 222 South Riverside Plaza, Chicago, IL 60606.)

(Technical society and technical association specifications and standards are generally available for reference from libraries. They are also distributed among technical groups and using Federal agencies.)

3. REQUIREMENTS

* 3.1 Materials. The material shall be polyethylene and copolymers, high density, for molding and extrusion purposes, with additives included. Ultraviolet light protection shall be provided by the incorporation of not less than 0.3% carbon black or other equally efficient pigments or inhibitors into the material. These additives shall not contaminate the lading or lose effectiveness in storage. The drum material shall meet the requirements of 178.19 (DOT 34) of Title 49 Federal Code of Regulations and when applicable of the individual certificate of exemption issued by the Department of Transportation (DOT) and to those requirements specified herein. The drum material and components shall conform to the Federal Food, Drug, and Cosmetic Act, Food Additive Amendment, 21 Code of Federal Regulations, 121.2514 when used for food products.

* 3.2 Design and construction. The drums shall be of the design and construction specified in DOT 34 and as specified herein. The 55 gallon (208 L) drums shall have a certificate of exemption issued by DOT (see 6.4). The drums shall be molded of materials specified in 3.1. A removable head is not authorized. The 5 and 15 gallon (19 L and 57 L) drums shall be furnished with either one or two carrying handles on the top at the option of the manufacturer. The 30 and 55 gallon (114 L and 208 L) drums shall be fabricated with the following handling devices: Either one or two handles on the top or with indented or recessed side walls or with special formed chimes. Handling devices shall withstand the combined lifted weight of drum and contents when tested as specified in 4.4.7. Rolling rings on drums are optional and when specified (see 6.2) a minimum of two are required. The designs and dimensions shown on figures 1 and 2 are for 15 gallon (57 L) cylindrical drums with rolling rings, are approximate and are to be used as a guide only. The wall thickness measured on any point of the drum shall be as specified in DOT 34 except for the 55 gallon (208 L) drum which shall be as specified in the individual certificate of exemption issued by DOT. Design shall permit stacking.

3.2.1 Openings. The 5 gallon (19 L) drum shall have one opening on the top except when specified (see 6.2) an air vent shall be added diametrically opposite the top opening. The 15, 30, and 55 gallon (57 L, 114 L and 208 L) drums shall have two openings. The opening shall not exceed 2.7 inches (69 mm) in diameter and when specified (see 6.2) shall have either a commercial clinch-on closure (flexible or reversible spout) or molded-in opening. The molded-in opening for the 5 gallon (19 L) drum shall be externally threaded to accept a buttress threaded cap closure or when specified (see 6.2) an internally threaded opening to accept an NPS plug. The molded-in opening for the 15, 30 and 55 gallon (57 L, 114 L and 208 L) drums shall have molded-in internal NPS or buttress threads (see 3.2.1.1). There shall be not less than 2-1/2 buttress threads. The closure for flexible spout shall be a metal or plastic screw cap or plug having not less than two continuous full threads that match the spout and of sufficient length to completely engage a minimum of two threads when cap with gasket or cap liner in place is screwed in.

* 3.2.1.1 Plug and gasket. The buttress plug and gasket shall be made of material resistant to the lading and shall have not less than two continuous external buttress threads that match the internal thread of the opening. The plug shall have a 3/4 inch (20 mm) NPS center reducer with molded-in diaphragm. The 3/4 inch (20 mm) center reducer without molded diaphragm shall accept a 3/4 inch (20 mm) NPT plug for non-hazardous commodities (see 6.2). Vented closure devices shall be used for surface shipments only.

* 3.2.1.2 Spigot and twine. When drums are used for food products, they shall be provided with a polyethylene spigot and a spigot carrying plug or a length of polyethylene twine for attachment to drum when a non-spigot carrying plug closure is furnished. The spigot shall have a threaded portion matching the 3/4 inch (20 mm) threaded hole in the plug. The polyethylene twine shall be not less than 18 inches (457 mm) long.

3.2.1.3 Plug wrench. When specified (see 6.2), a commercial plug wrench made to fit the drum plugs shall be provided.

* 3.3 Marking. The drums shall be marked with a certification of compliance to the applicable requirements of DoT 34, the capacity in gallons, and the month and year of manufacture (e.g., "DoT 34-15-6/75", indicates a 15 gallon (57 L) drum, made in June 1975, conforming to DoT 34). In addition, the drum shall be marked with the maker's name, or symbol registered with the Bureau of Explosives. Unless otherwise specified (see 6.2), the markings shall be embossed on the bottom head of the drum in characters not less than 1/2 inch (13 mm) high. Unless otherwise specified (see 6.2) The top head of each drum shall be marked "NOT FOR FOOD USE". The marking shall be embossed or indelibly stenciled in a contrasting color in capital letters not less than 1/2 inch (13 mm) high.

3.4 Capacity. The minimum actual capacity shall be not less than rated capacity plus 4 percent. The maximum actual capacity shall be not greater than the applicable rated capacity (see 1.2) plus 15 percent for five gallon (19 L) drums and shall not be greater than rated capacity plus 10 percent for drums, 15 gallons (57 L) and over.

* 3.5 Performance. In addition to the requirements specified herein, drums shall not show cracks or leaks when subjected to the tests specified in 4.2.4. Drums with repaired bodies and components shall not be acceptable.

* 3.6 Workmanship. Finished drums shall be free of lumps, blisters, or flash. The threads of the openings and plugs shall be clean, well formed, free of excess flash, and distortion. The seat of the openings and plugs shall be smooth and free of defects that may affect the closure. The color shall be uniform. The drum interior shall be clean and free of foreign matter. The caps and spouts shall be clean, free of excess flash or metal and distortion.

4. QUALITY ASSURANCE PROVISIONS

4.1 Responsibility for inspection. Unless otherwise specified in the contract, the contractor is responsible for the performance of all inspection requirements as specified herein. Except as otherwise specified in the contract, the contractor may use his own or any other facilities suitable for the performance of the inspection requirements specified herein, unless disapproved by the Government. The Government reserves the right to perform any of the inspections set forth in the specification where such inspections are deemed necessary to assure supplies and services conform to prescribed requirements.

4.1.1 Certificate of compliance. Certificates of compliance, certified test reports, approval labels or listing marks for codes and standards, as applicable, that are submitted as proof of conformance with the specification requirements shall be examined and validated.

4.2 Quality conformance inspection. Except as otherwise specified herein, sampling for inspection shall be performed in accordance with the provisions set forth in MIL-STD-105.

4.2.1 Inspection of components and materials. In accordance with 4.1, components and materials shall be inspected in accordance with all the requirements of referenced specifications, drawings, and standards unless otherwise excluded, amended, modified, or qualified in this specification of applicable purchase document.

4.2.2 End item inspection. A lot shall consist of all drums of one size, offered for inspection at one time. The sample unit for this inspection shall be one drum complete with plugs and closures and other compenents required.

* 4.2.2.1 Visual examination. Examination of the drum shall be made for defects classified in table I. The inspection level shall be II and acceptable quality level (AQL) shall be 2.5 for major defects and 6.5 for total defects, expressed as defects per hundred units.

TABLE I. Classification of defects

Examine	Defect	Classification Major	Minor
Design	Not one piece body	X	
	Less than two openings (15, 30 and 55 gallon) (57, 114 and 208 L)	X	
	No stacking provisions on top or bottom	X	
	Handles not as specified when furnished	X	
	Handles not on top of the unit when specified	X	
Openings and plugs	Threads not furnished	X	
	Threads not continuous	X	
	Plug material not resistant to lading	X	
	Plug threads do not match opening threads	X	
	Not a combination plug and adapter (15, 30 and 55 gallon drums) (57, 114 and 208 L)	X	
	Adapter 3/4 thread not as specified (15, 30 and 55 gallon drums) (57, 114 and 208 L)	X	
	Sealing surfaces not smooth enough to effect seal	X	
	Air vent (5 gallon (19 L) drum) not diametrically opposite top opening		X

TABLE I. Classification of defects (cont'd)

Examine	Defect	Classification Major	Minor
Gasket	Not as specified	X	
	Missing	X	
	Damaged	X	
Spigot and polyethylene twine	Missing or not as specified	X	
Plug wrench (when required)	Missing, does not fit drum plug	X	
Marking	Missing, illegible, not as specified	X	
Workmanship	Lumps, blisters, and flash		X
	Thread openings and plugs not free of foreign matter and excess flash	X	
	Reduced area or distorted threads	X	
	Seat of opening or plugs not smooth	X	
	Color not uniform		X
	Interior and exterior not free of foreign matter		X
	Flexible caps and spouts not free of distortion		X

4.2.3 Dimensional and capacity inspection. Components of the drum shall be inspected for conformance to dimensions and capacity. Any nonconformance shall be considered a defect. The inspection level shall be S-2 with an AQL of 2.5 defects, expressed in terms of defects per hundred units. The inspection of the capacity of the drum shall be performed in accordance with technique (b), Method 5010 of FED-STD-101.

* 4.2.4 End item testing. At the start of production, seven sample drums shall be selected for testing. A different drum shall be used for each of the tests specified in 4.4.1, 4.4.2, 4.4.3, 4.4.4, 4.4.5, 4.4.6 and 4.4.7. Failure of any test shall be cause for rejection of the lot. The test shall be repeated upon any change in materials, design, or process method. Failure of any test shall be cause for rejection of the lot.

4.3 Packaging Inspection. An inspection shall be made to determine compliance with the requirements of section 5. The sample unit shall be one drum marked for delivery. The lot shall be the number of drums offered for inspection at one time. The inspection level shall be S-2 with an AQL of 4.0, expressed in terms of defects per hundred units. Defects shall be as specified in table II.

TABLE II. Examination of Packaging

Examine	Defect
Marking	Omitted; incomplete; incorrect or illegible; improper size, location, or sequence; improper method of application

4.3.1. Examination of palletization. An examination shall be made to determine that palletization is in compliance with section 5. Defects shall be scored as specified in table III. The sample unit for this examination shall be one palletized unit load fully prepared for delivery. The inspection level shall be S-1 with an AQL of 6.5 expressed in terms of defects per hundred units.

TABLE III. Examination of palletization

Examination	Defect
Finished dimension	Length, width, or height exceeds specified maximum requirement
Palletization	Load not bonded with required straps specified.
Weight	Exceeds maximum load limits
Marking	Omitted; incorrect; illegible; of improper size, location, sequence or method of application

4.4 Tests.

4.4.1 Drop test. The drum, filled to 98 percent ± 2% rated capacity with water, when drum and contents are at an ambient temperature of 70° to 80° F (21° to 27° C) shall be dropped from a height of 4 feet (1.2 m) onto solid concrete so as to drop diagonally on top edge or any part constructed to a lesser strength. Failure to comply with the requirements of 3.5 shall be cause for rejection of the item.

4.4.2 Cold test The drum filled to 98 percent rated capacity ± 2% with a solution compatible with polyethylene, and which remains liquid at a temperature equal to or below minus 20°F (-29°C), shall be dropped from a height of 4 feet (1.2 m) onto solid concrete on any part of the drum when drum and contents have been conditioned until the contents are at or below minus 20°F (-29°C). Failure to comply with the requirements of 3.5 shall be cause for rejection of the item.

4.4.3 Pressure test. The drum shall be hydrostatically tested to retain a pressure of not less than 15 pounds per square inch (psi) (103 kPa) for 5 minutes. A drop in pressure below 15 psi, (103 kPa) or evidence of leakage shall constitute failure of this test in accordance with the requirements of 3.5.

4.4.4 Vibration test. The drum filled to 98 percent capacity with water, shall be tested by placing the drum on a vibration table anchored in such a manner that all horizontal motion shall be restricted and only vertical motion allowed. The test shall be performed for 1 hour using an amplitude of 1 inch (25.4 mm) at a frequency that causes the test drum to be raised from the floor of the table to such a degree that a piece of paper or flat steel strap or tape can be passed between the table and the drum. Failure to comply with the requirements of 3.5 shall be cause for rejection of the item.

* 4.4.5 Compression test. The drum, filled with water to 98 percent rated capacity ± 2%, shall be subjected to the following static compression load, as applicable, applied on the load bearing areas of the top of the drum, for not less than 48 hours. This test shall be conducted at an ambient temperature between 70° and 80° (21° to 27°C). The drums shall withstand the static compression without buckling of the sidewalls sufficient to cause damage. In no case shall the top to bottom deflection of one or more drums be more than one (1) inch (25.4 mm).

Rated capacity	Compression load (pounds)
5 gallon (19 L)	600 (272 kg)
15 gallon (57 L)	1200 (544 kg)
30 gallon (114 L)	1800 (816 kg)
55 gallon (208 L)	2400 (1088 kg)

4.4.6 Cyclical temperature test. The filled drum shall be subjected to a cyclical temperature change as follows: 12 hours at -10°F and 12 hours at 100°F repeated for a period of seven days. At the conclusion of this test, while drum and contents remain at 100°F, the drum shall be dropped from a height of 4 feet onto solid concrete so as to drop diagonally on top edge or any part constructed to a lesser strength. Failure to comply with the requirements of 3.5 shall be cause for rejection of the item.

4.4.7 Handling test. The drum shall be filled with water to 98% ± 2% of rated capacity. The handling device to be tested shall be used to lift the drum to a height of three feet (914 mm), then lowered to the ground. This shall be repeated twice and then held at a height of three feet (914 mm) for a period of ten minutes. Failure to comply with the requirements of 3.2 shall be cause for rejection of the item.

5. PACKAGING

5.1 Packing. Packing shall be Level C.

* 5.1.1 Level C. Drums shall be shipped in a manner to insure carrier acceptance and safe delivery at destination at lowest transportation rate for such supplies. Shipments shall be in accordance with Uniform Freight Classification or National Motor Freight Classification, as applicable.

5.2 Palletization. When specified (see 6.2), drums (except for 55 gallon (208 L) drums) packed as specified in 5.1, shall be palletized in accordance with load type XII of MIL-STD-147. Pallet patterns shall be in accordance with the appendix of MIL-STD-147. If the container is of a size which does not conform to any of the pallet patterns specified in MIL-STD-147, the pallet pattern used shall first be approved by the contracting officer.

5.3 Marking. In addition to any special marking required by the contract or order, shipments shall be marked in accordance with MIL-STD-129.

6. NOTES

6.1 Intended use. The drums are intended to be used for air and surface shipment and storage of regulated and non-regulated liquid products such as potable water (see 6.5).

* 6.2 Ordering data. Procurement documents should specify the following:

(a) Title, number, date of this specification.
(b) Size required (see 1.2).
(c) When ultraviolet light protection is not required (see 3.1).
(d) When rolling rings are required (see 3.2).
(e) When air vent is required for 5 gallon drum (see 3.2.1).
(f) Type of closure and internal or external threads required (see 3.2.1).
(g) When a 3/4 inch NPT plug is required (see 3.2.1.1).
(h) When a plug wrench is required (see 3.2.1.3).
(i) When special markings are not required (see 3.3).
(j) When palletization is required (see 5.2).

6.3 5 gallon drum. The 5 gallon (19 L) drum is identified commercially as a pail.

6.4 Exemption certificate. Since 55 gallon (208 L) drums are not covered by DoT 34, The Department of Transportation will issue a DoT exemption certificate to a supplier who forwards a certified test report to DoT. Information pertaining to obtaining an exemption may be obtained from Department of Transportation, Materials Transportation Bureau, Washington, DC 20590.

6.5 Regulated products. The following abbreviated list of regulated products are authorized to be packaged in these drums by the Department of Transportation, 49CFR, Transportation, Part 100 to 199, and also Air Force Manual 71-4, "Packaging and Handling of Dangerous Materials for Transportation by Military Aircraft". This abbreviated list states the section where the authorized containers may be found in title 49, Code of Federal Regulations:

Acids or other corrosive liquids	173.245
Hydrochloric (Muriatic) acid, etc.	173.263
Sulfuric acid	173.272
Hypochlorite solutions	173.277
Hydrofluosilicic acid	173.265
Hydrogen peroxide solution in water	173.266
Benzene phosphorus dichloride and benzene phosphorous thiodichloride	173.250a
Compound, cleaning liquid	173.245

6.6 Changes from previous issue. The margins of this specification are marked with an asterisk to indicate where changes (additions, modifications, corrections, or deletions) from the previous issue were made. This was done as a convenience only and the Government assumes no liability whatsoever for any inaccuracies in these notations. Bidders and suppliers are cautioned to evaluate the requirements of this document based on the entire content irrespective of the marginal notations and relationship to the last previous issue.

Custodians:

Army - GL
Navy - SA
Air Force - 69

Review activities:

Army - MD, ME, EA
Navy - AS
Air Force - 99
DLA - GS

User activity:

Army - AR

Preparing activity:

Army - GL

Project No. 8110-0239

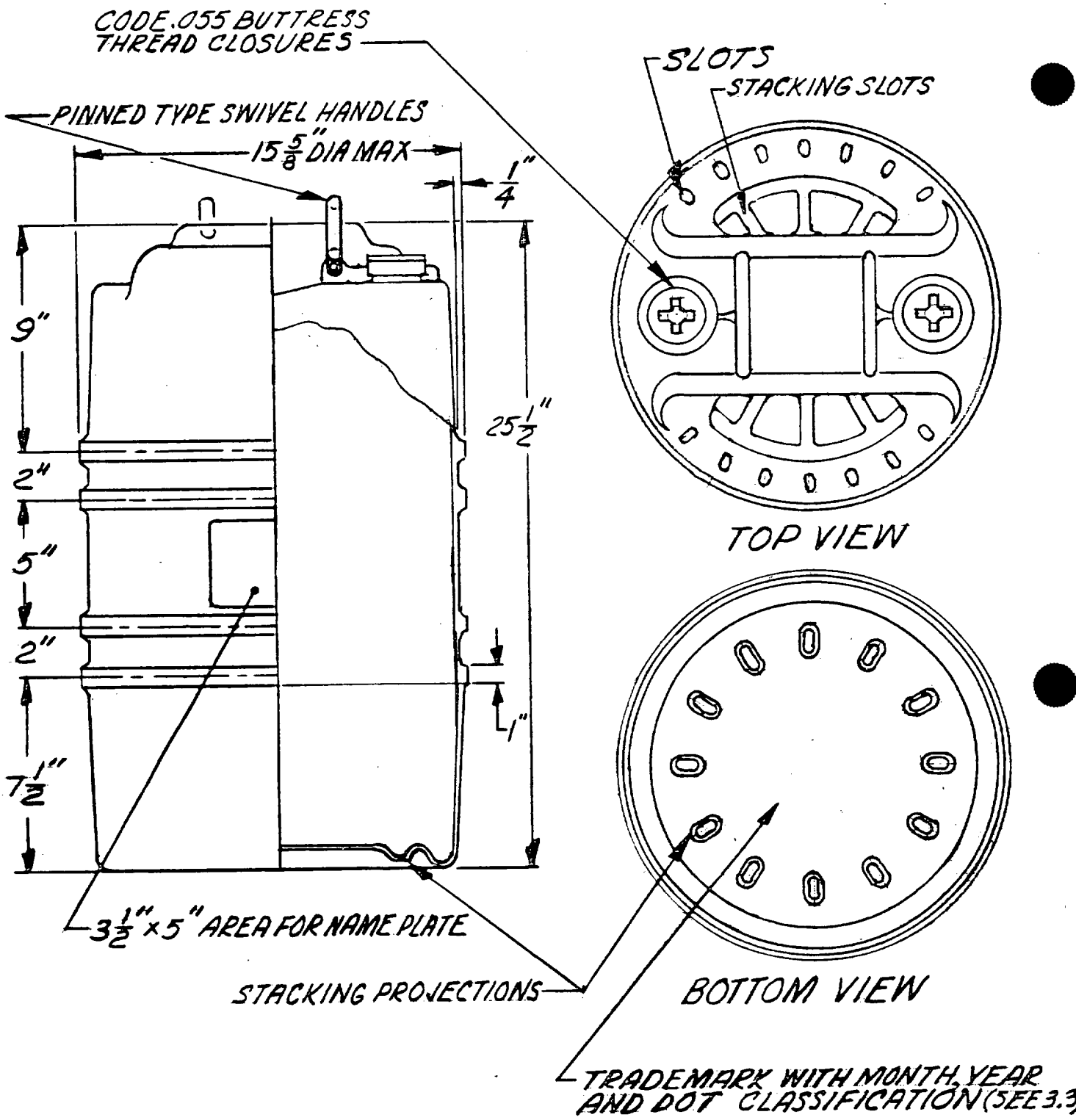

15 GALLON DRUM

FIGURE 1

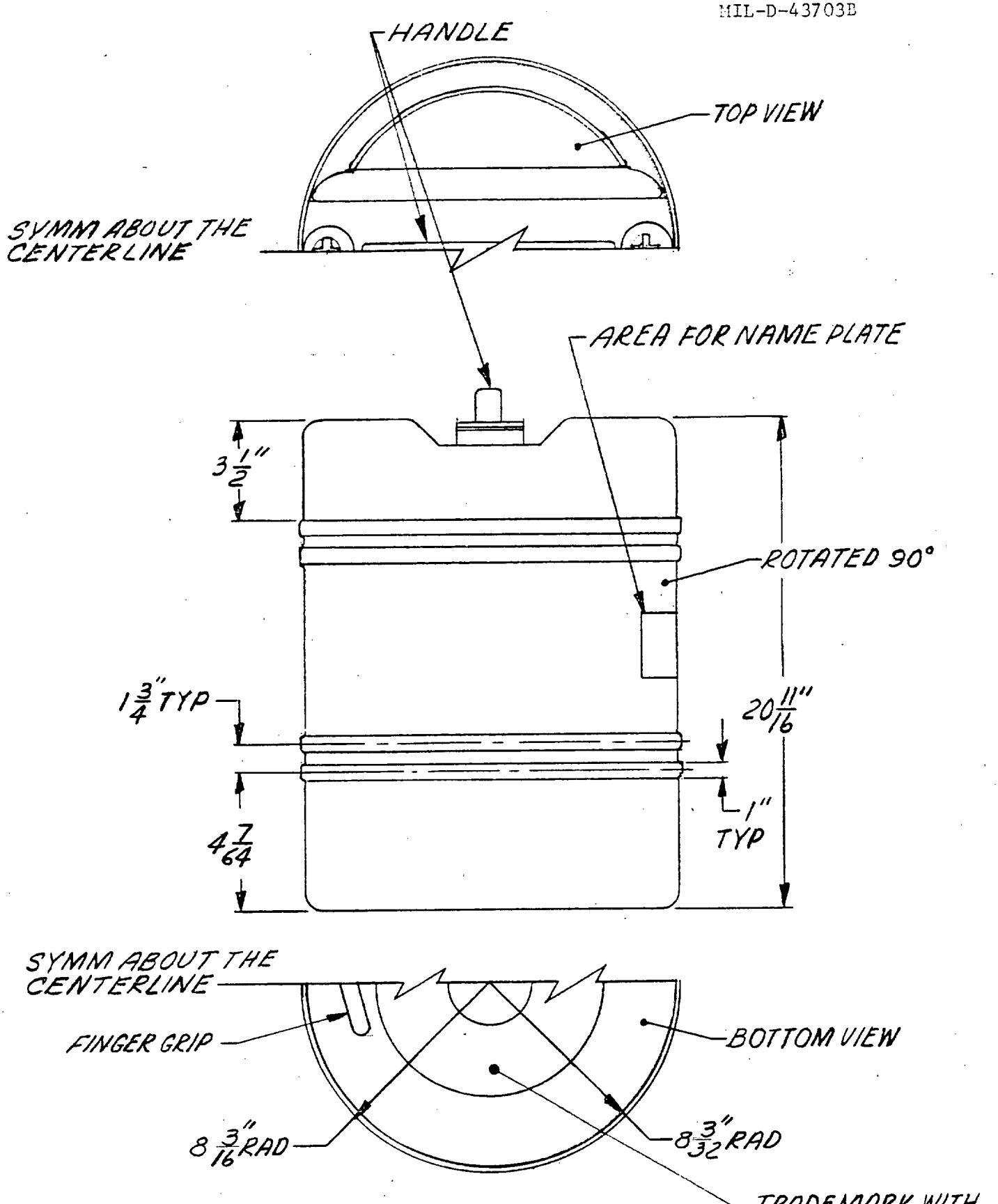

15 GALLON DRUM

FIGURE 2

FOLD

DEPARTMENT OF THE ARMY
US ARMY NATICK RESEARCH and DEVELOPMENT COMMAND
NATICK, MASSACHUSETTS 01760

OFFICIAL BUSINESS
PENALTY FOR PRIVATE USE $300
DRXNM-TD G

POSTAGE AND FEES PAID
DEPARTMENT OF THE ARMY
DOD-314

U.S.MAIL

Commander
US Army Natick Research and Development Command
ATTN: DRXNM-TDG
Natick, MA 01760

NATICK OP 1 JUL 77

FOLD

STANDARDIZATION DOCUMENT IMPROVEMENT PROPOSAL

INSTRUCTIONS: This form is provided to solicit beneficial comments which may improve this document and enhance its use. DoD contractors, government activities, manufacturers, vendors, or other prospective users of the document are invited to submit comments to the government. Fold on lines on reverse side, staple in corner, and send to preparing activity. Attach any pertinent data which may be of use in improving this document. If there are additional papers, attach to form and place both in an envelope addressed to preparing activity. A response will be provided to the submitter, when name and address is provided, within 30 days indicating that the 1426 was received and when any appropriate action on it will be completed.

NOTE: This form shall not be used to submit requests for waivers, deviations or clarification of specification requirements on current contracts. Comments submitted on this form do not constitute or imply authorization to waive any portion of the referenced document(s) or to amend contractual requirements.

DOCUMENT IDENTIFIER *(Number)* AND TITLE

MIL-D-43703B - Drums, Shipping and Storage, Molded Polyethylene

NAME OF ORGANIZATION AND ADDRESS OF SUBMITTER

☐ VENDOR ☐ USER ☐ MANUFACTURER

1. ☐ HAS ANY PART OF THE DOCUMENT CREATED PROBLEMS OR REQUIRED INTERPRETATION IN PROCUREMENT USE? ☐ IS ANY PART OF IT TOO RIGID, RESTRICTIVE, LOOSE OR AMBIGUOUS? PLEASE EXPLAIN BELOW.

A. GIVE PARAGRAPH NUMBER AND WORDING

B. RECOMMENDED WORDING CHANGE

C. REASON FOR RECOMMENDED CHANGE(S)

2. REMARKS

SUBMITTED BY *(Printed or typed name and address — Optional)*

TELEPHONE NO.

DATE

DD FORM 1426 1 OCT 76

EDITION OF 1 JAN 72 WILL BE USED UNTIL EXHAUSTED.