Downloaded from http://www.everyspec.com

MIL-D-22706E(AS)
15 OCTOBER 1985
SUPERSEDING
MIL-D-22706D(AS)
13 November 1981

MILITARY SPECIFICATION

DUCT AND SCUFF COVER, PNEUMATIC, FLEXIBLE

This specification is approved for use by the Naval Air Systems Command, Department of the Navy and is available for use by all Departments and Agencies of the Department of Defense.

1. SCOPE

1.1 Scope. This specification covers flexible, pneumatic ducts and scuff covers for use in the delivery of high-flow, low pressure air at temperatures to 600°F for operation of aircraft starting and air conditioning systems.

1.2 Classification. The products shall be of the following types and classes:

Type I	Duct
Type II	Scuff Cover
Type III	Duct and Scuff Cover

Class I	30-foot length
Class II	60-foot length

1.3 Military part numbering system (see 6.5).

M22706-D-30 (Type I, Class I)
M22706-D-60 (Type I, Class II)
M22706-S-30 (Type II, Class I)
M22706-S-60 (Type II, Class II)
M22706-DS-30 (Type III, Class I)
M22706-DS-60 (Type III, Class II)

2. APPLICABLE DOCUMENTS

2.1 Issues of documents. The following documents, of the issue in effect on date of invitation for bids or request for proposal, form a part of this specification to the extent specified herein.

Beneficial comments (recommendations, additions, deletions) and any pertinent data which may be of use in improving this document should be addressed to: Naval Air Engineering Center, Systems Engineering and Standardization Department (Code 93), Lakehurst, NJ 08733-5100, by using the self-addressed Standardization Document Improvement Proposal (DD Form 1426) appearing at the end of this document or by letter.

FSC 4720

DISTRIBUTION STATEMENT A. Approved for public release; distribution is unlimited.

Downloaded from http://www.everyspec.com

SPECIFICATIONS

FEDERAL

TT-I-735	Isopropyl Alcohol
TT-S-735	Standard Test Fluids, Hydrocarbon
PPP-B-576	Box, Wood, Cleated, Veneer, Paper Overlaid
PPP-B-585	Boxes, Wood, Wirebound
PPP-B-601	Boxes, Wood, Cleated-Plywood
PPP-B-621	Boxes, Wood, Nailed and Lock-Corner

MILITARY

MIL-P-116	Preservation, Methods of
DOD-D-1000	Drawings, Engineering and Associated Lists
MIL-H-5606	Hydraulic Fluid, Petroleum Base, Aircraft and Ordnance
MIL-L-7808	Lubricating Oil, Aircraft Turbine Engine, Synthetic Base
MIL-L-10547	Liners, Case, Waterproof
MIL-L-23699	Lubricating Oil, Aircraft Turbine Engines, Synthetic Base

STANDARDS

MILITARY

MIL-STD-129	Marking for Shipment and Storage
MIL-STD-130	Identification Marking of U.S. Military Property
MIL-STD-143	Standards and Specification; Order of Precedence for the Selection of
MIL-STD-810	Environmental Test Methods
MIL-STD-1186	Cushioning, Anchoring, Bracing, Blocking and Waterproofing, with Appropriate Test Methods
MS17833	Fitting, Pneumatic Starter Duct-Flanged (Male)
MS17835	Fitting, Pneumatic Starter Duct-Flanged (Female)

Downloaded from http://www.everyspec.com

(Copies of specifications, standards, drawings, and publications required by contractors in connection with specific procurement functions should be obtained from the procuring activity or as directed by the contracting officer.)

2.2 Other publications. The following document forms a part of this specification to the extent specified herein. Unless otherwise indicated, the issue in effect on date of invitation for bids or request for proposal shall apply:

AMERICAN SOCIETY OF MECHANICAL ENGINEERS
Power Test Code 19.5.4: Supplement on Instruments and Apparatus; Part 5, Chapter 4, Flow Measurement by Means of Standardized Nozzles and Orifice Plates

(Copies of the ASME publication may be obtained from ASME, Publications Department, United Engineering Center, 345 East 47th Street, New York, NY 10017).

3. REQUIREMENTS

3.1 Qualification. The items furnished under this specification shall be products which are qualified for listing on the applicable Qualified Products List (QPL) at the time set for opening of bids (see 6.4).

3.1.1 Qualification is automatically extended to the Class II duct (or scuff cover) when a manufacturer's duct (or scuff cover) can be manufactured in Class I length and the Class II duct or scuff cover is exactly the same in design, construction, and materials to the Class I duct (or scuff cover), and the Class I duct (or scuff cover) is qualified.

3.1.2 Retention of qualification. To maintain status on a QPL, certification shall be submitted at two year intervals to indicate continued compliance with the requirements of this specification (see 4.3.1 and 6.4).

3.2 Selection of specifications and standards. Specifications and standards for necessary commodities and services not specified herein shall be selected in accordance with MIL-STD-143.

3.3 Materials. Materials and parts not specifically covered herein shall be sound, of uniform quality and condition, and free of defects that may adversely affect the appearance, strength, endurance and wear resistance of the finished products. The materials used in the duct shall be resistant to deterioration or corrosion, liquid absorption or penetration, fungus growth, and sunshine. The ability of the materials to meet the environmental requirements of MIL-STD-810 shall be verified by the contractor in accordance with 4.5.10.

Source: https://assist.dla.mil -- Downloaded: 2014-09-07T19:20Z

Downloaded from http://www.everyspec.com

3.3.1 Protective treatment. Protective treatment shall be applied when materials subject to corrosion in salt air or other atmospheric conditions are used in the construction of the duct assembly. Materials shall be protected against harsh corrosion in a manner that will not prevent compliance with the performance requirements of this specification. The use of any protective coating that will crack, chip, or scale, with age or extremes of atmospheric conditions is prohibited.

3.4 Design and construction. The assembly shall consist of a length specified by the procuring activity (see 1.2 and 6.2). An easily replaceable scuff cover (Figure 1) shall be used. The duct shall be manufactured using a two layer (minimum) construction (silicone covered by reinforcement material will constitute one layer). Reinforcement material is defined as being two spirals of yarn alternately layered on the silicone at approximately 45° or one braid of yarn. The inner wall of silicone shall have a minimum thickness of 0.110 of an inch followed by the reinforcement material. The outer wall of silicone shall have a minimum thickness of 0.025 of an inch, followed by reinforcement material (see Figure 2). However, the combined walls of silicone shall have a thickness of 0.170 $^{+0.032}_{-0.000}$ of an inch. The duct shall be designed to be compatible with MS17833 and MS17835 (see Appendix).

3.4.1 Duct.

3.4.1.1 Dimensions. The duct shall be of 30-foot or 60-foot length, as specified. The duct shall have a uniform wall thickness with a tolerance of ±1/32 inch, exclusive of the scuff cover. The inside diameter of the duct shall be not less than 3-1/2 inches nor greater than 3-9/16 inches at standard day conditions. The outside diameter shall be as small as possible consistent with the requirements specified herein but shall be not greater than 4-1/8 inches. The duct construction shall be uniform throughout so that it will be possible to cut off a section of the duct at any location and reconnect to any of the standard beaded shank end fittings. No painting or any other special treatment of the cut surface shall be required.

3.4.1.1.1 Dimensional changes. The duct shall be so designed and constructed that it will not decrease in length more than two percent nor increase more than three percent when new or after exposure to any of the conditions specified herein. The inside diameter shall not decrease more than two percent after exposure to any of the conditions specified herein. Increases in outside diameter shall be restricted to the maximum diameter specified in 3.4.1.1.

3.4.1.2 Fabric. The exterior fabric shall be a material that is resistant to liquid absorption and penetration that will meet the requirements and tests specified herein. The fabric shall be highly resistant to abrasion (see 4.5.11).

3.4.1.3 Serviceability. The duct shall be designed and constructed to resist abrasion (see 4.5.11), exposure to solvents (see 4.5.9), and leakage (see 4.5.3). It shall withstand continuous flexing consistant with the inspections specified herein (see 4.5.4).

Downloaded from http://www.everyspec.com

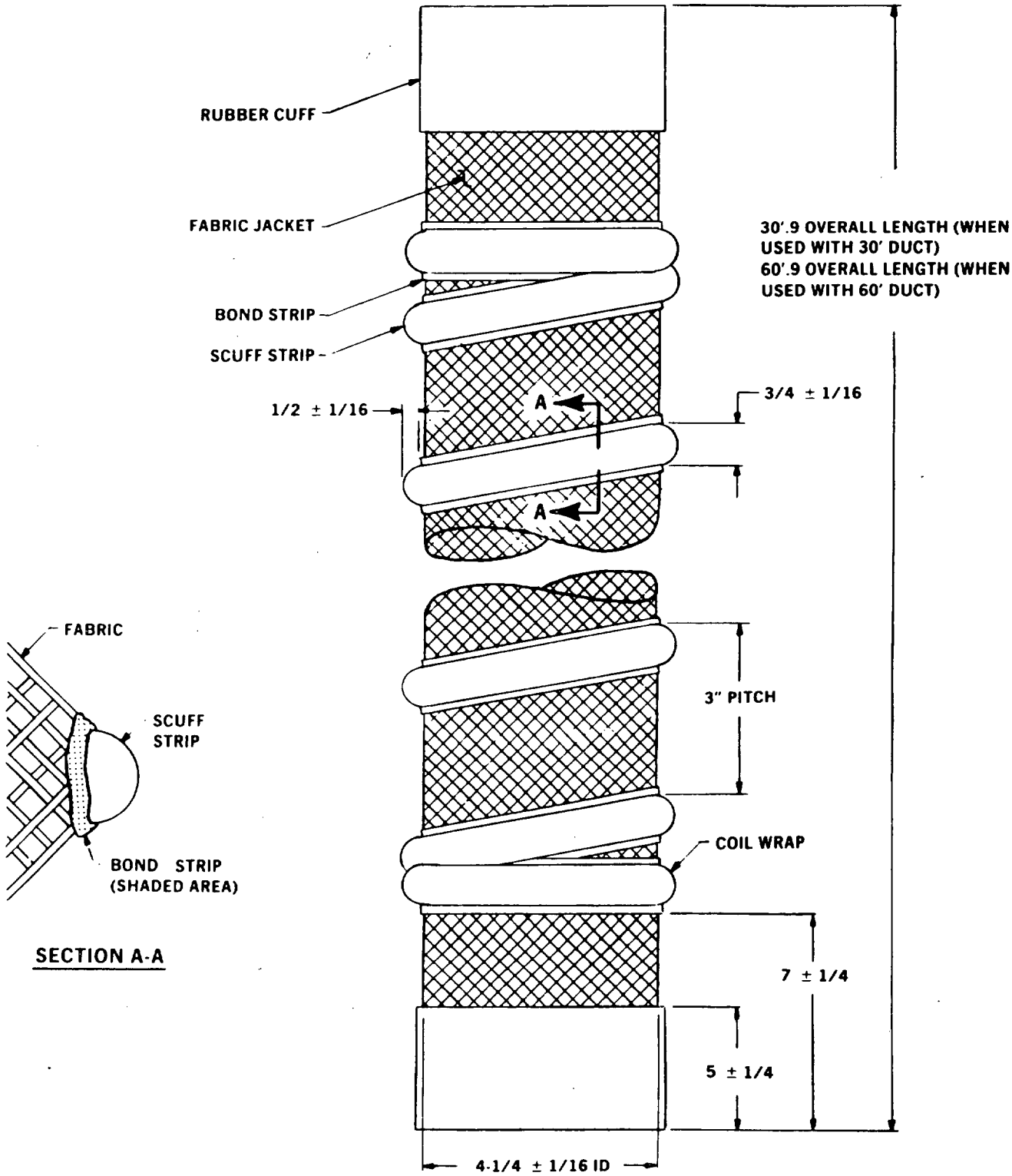

FIGURE 1. Scuff cover 30 ft./60 ft.

Downloaded from http://www.everyspec.com

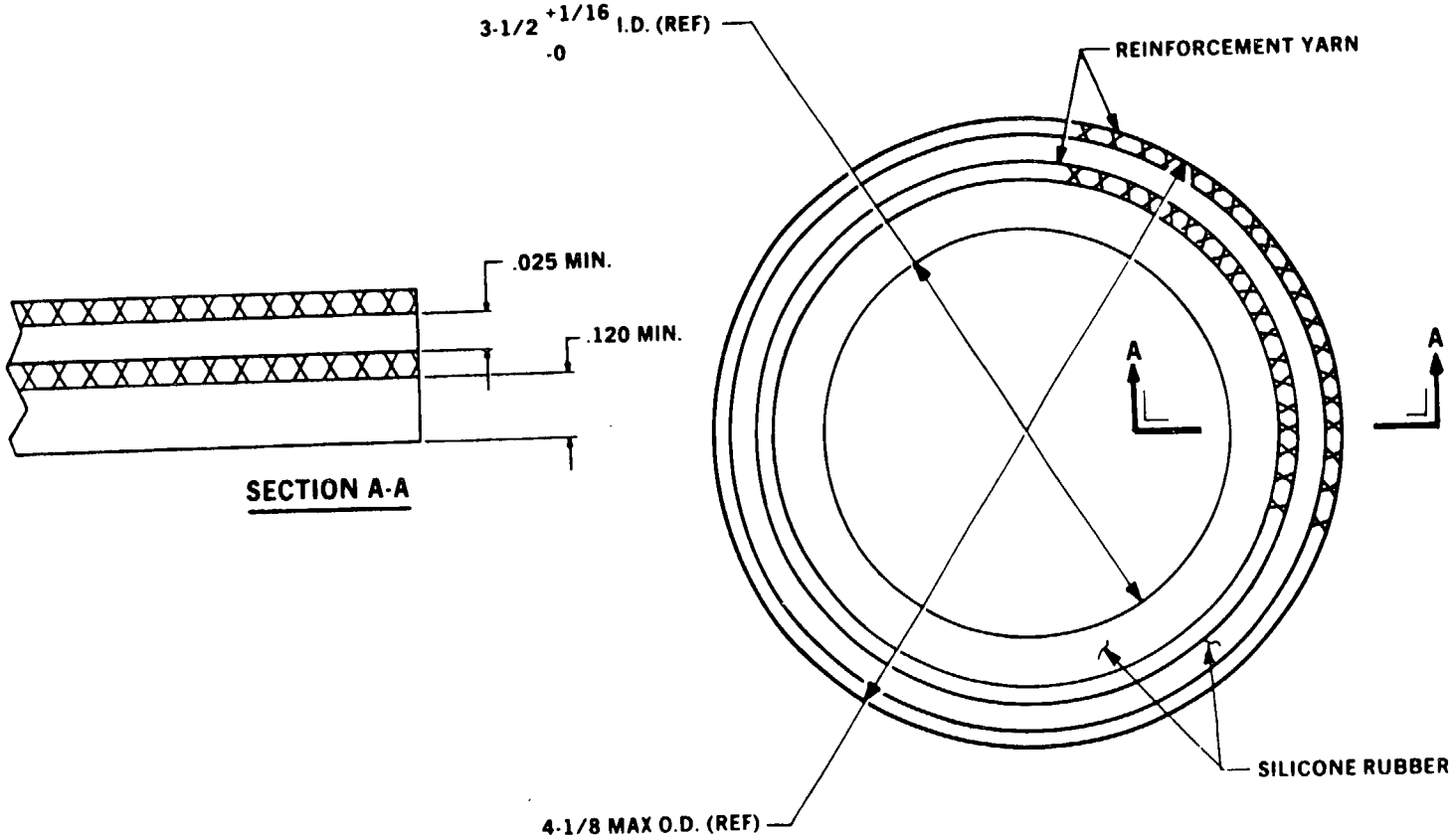

FIGURE 2. Duct 30-foot, 60-foot length.

Downloaded from http://www.everyspec.com

3.4.2 Scuff cover.

3.4.2.1 Dimensions. Scuff cover dimensions shall be as specified in Figure 1.

3.4.2.2 Fabric. The scuff cover (see Figure 1) shall be constructed of a moisture resistant fabric having a maximum regain of 0.5% as measured by ASTM Test No. D629.59T. Materials may be treated with a moisture resistant compound to meet this requirement. The fabric shall be of an open construction (weave or braid).

3.4.2.3 Scuff strip. The scuff cover shall be wound with a protective helical coil of natural or synthetic rubber with a minimum durometer of 60, permanently vulcanized to the fabric. A bonding strip shall be used between the scuff strip and the fabric. The bond strip shall be vulcanized to the fabric so that the fabric immediately below the bond strip is completely contained within the rubber material and there are no exposed threads below the bond strip. The last coil wrap at each end shall be wrapped squarely around the fabric and vulcanized to itself to prevent separation or ravelling of the strip.

3.4.2.4 Scuff cover ends (cuff). Each end of the scuff cover shall be vulcanized with a 5 inch minimum width rubber strip to prevent unravelling of the scuff cover and space for identification information (see 3.8.1).

3.5 Environmental conditions. The duct and scuff cover shall withstand the following conditions:

a. Ambient temperature of -65° ±5°F when flowing air at 100 ±5 pounds per minute, 80 ±2 psia, 600 $^{+0}_{-10}$ °F (see 4.5.4).

b. Ambient temperature of +130 ±5°F when flowing air at 100 ±5 pounds per minute, 80 ±2 psia, 600 $^{+0}_{-10}$ °F (see 4.5.8).

c. Static proof pressure of 250 psia at a normal ambient temperature (see 4.5.2).

d. Exposure to salt sea atmosphere (see 4.5.10).

e. Fungus growth as encountered in tropical conditions (see 4.5.10).

f. Radiant energy as found under natural conditions (see 4.5.10).

3.6 Part numbering interchangeability. All parts having the same manufacturer's part number shall be functionally and dimensionally interchangeable. The item identification and part number requirements of DOD-D-1000 shall govern the manufacturer's part numbers and changes thereto.

3.7 Weight. The weight of the duct without end flanges and fittings but with scuff cover shall be not greater than 2.5 pounds per foot of length.

Downloaded from http://www.everyspec.com

3.8 Marking.

3.8.1 Identification of product. Duct, flanges and scuff covers shall be marked for identification in accordance with MIL-STD-130. The identification shall be permanent and shall not peel off, crack or loosen with age and environmental conditions. The location and other details selected for marking shall be in accordance with Figure 3.

3.9 Workmanship. All workmanship shall be such as to result in a first quality duct and scuff cover to meet the requirements of this specification. The duct and scuff cover shall be free from blemishes and defects and shall be fabricated and finished in a workable manner.

4. QUALITY ASSURANCE PROVISIONS

4.1 Responsibility for inspection. Unless otherwise specified in the contract, the contractor is responsible for the performance of all inspection requirements as specified herein. Except as otherwise specified in the contract, the contractor may use his own or any other facilities suitable for the performance of the inspection requirements specified herein, unless disapproved by the Government. The Government reserves the right to perform any of the inspections set forth in the specification where such inspections are deemed necessary to assure supplies and services conform to prescribed requirements.

4.2 Classification of inspections. The inspection requirements specified herein shall be classified as follows:

a. Qualification inspection (see 4.3).

b. Quality conformance inspection (see 4.4).

4.3 Qualification inspection. Qualification inspection shall be as specified in Table I.

4.3.1 Retention of qualification. To comply with the requirements specified in 3.1.1, the manufacturer shall forward qualification certification at two year intervals to the Naval Air Engineering Center, Code 92613, Lakehurst, NJ 08733. This certification, signed by a responsible official of management, shall attest that the manufacturer has the capability to produce pneumatic ducts and scuff covers under conditions equal to those existing at the time of the original approved listing.

4.3.2 Sample size. The supplier shall furnish two Class I (30-foot) ducts or one Class II (60-foot) duct for testing to determine conformance with this specification. Class II ducts furnished shall be cut in half by the testing activity and tested as two 30-foot ducts.

Downloaded from http://www.everyspec.com

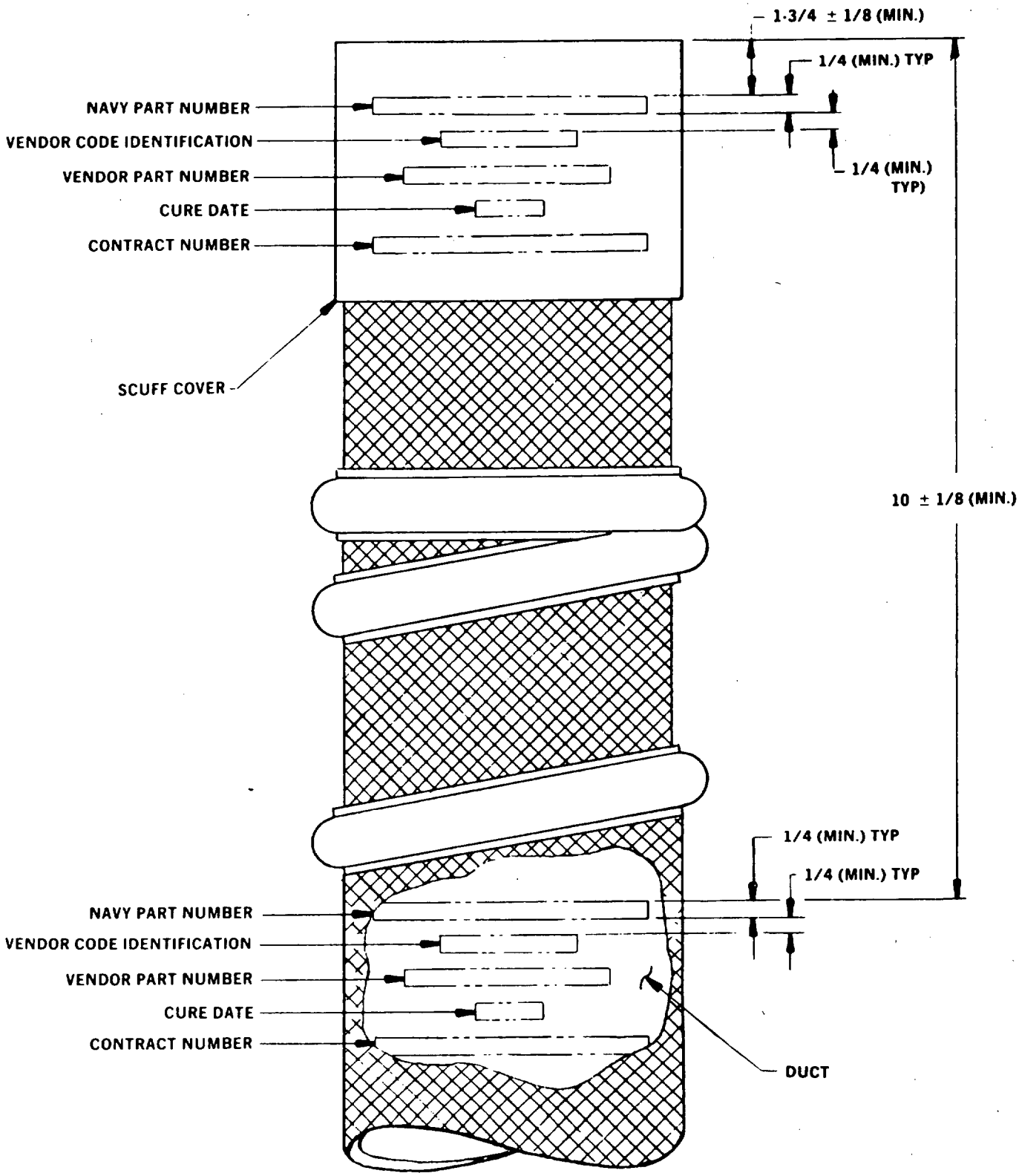

FIGURE 3. Duct/scuff cover (30'-60') identification markings, typical each end.

Downloaded from http://www.everyspec.com

4.3.3 Sampling plan. The samples specified in 4.3.2 for qualification testing shall be allocated to those tests as follows, with the tests conducted in the order listed in Table I.

TABLE I. Qualification Inspection.

Sample 1		Sample 2	
Examination of product	- 4.5.1	Examination of product	- 4.5.1
Static proof pressure*	- 4.5.2	Static proof pressure*	- 4.5.2
Leakage	- 4.5.3	Leakage	- 4.5.3
Low temperature	- 4.5.4	Endurance	- 4.5.8
Bend radius	- 4.5.5	Leakage	- 4.5.3
Abrasion resistance	- 4.5.11	Pressure drop	- 4.5.7
Leakage	- 4.5.3	Fluid resistance	- 4.5.9
High temperature soak*	- 4.5.6	Leakage	- 4.5.3
Leakage*	- 4.5.6	Environmental	- 4.5.10
		Leakage	- 4.5.3

* Without scuff cover

4.4 Quality conformance inspection. Quality conformance inspection shall consist of:

a. Individual inspection (4.4.1)

b. Sampling testing (4.4.2)

4.4.1 Individual inspection. Each duct shall be subjected to examination of product in accordance with 4.5.1. Any type failing to pass the examination shall be rejected.

4.4.2 Sampling testing. One duct from each lot of 100 or fraction thereof shall be randomly selected by a DCAS (Defense Contract Administration Services) representative and subjected to a 150 cycle test per 4.5.8, followed by a leakage test in accordance with 4.5.3. The duct or duct assembly shall be refurbished where necessary and inspected in accordance with 4.5.1, identified by vendor code as the test sample and delivered with the lot it represents.

4.4.3 Production lot. A production lot shall consist of ducts fabricated from a single batch of raw material and produced as one continous run.

4.5 Inspection methods.

4.5.1 Examination of product. Each duct and scuff cover shall be examined to determine conformance to the requirements specified herein with respect to materials, workmanship, marking, weight and dimensions. Records of examinations shall be kept complete and available to the Government as specified in the contract or order.

Downloaded from http://www.everyspec.com

4.5.2 Static proof pressure. The duct shall be sealed and restrained at both ends and subjected to a static pressure of 250 psia with air, water or nitrogen at normal ambient temperatures for five minutes to insure compliance with the static proof pressure requirements specified under 3.5 herein. Special caution should be used when using air or nitrogen at this pressure.

4.5.3 Leakage. The test shall be conducted at ambient prevailing temperatures. With the test duct blocked at both ends, the duct shall be pressurized with air or nitrogen to 150 psia and with the pressure trapped, the static pressure shall not drop 30 psi in less than one hour.

4.5.4 Low temperature soak. The duct assembly shall be placed in a chamber and cooled to and maintained at a temperature of -65° ± 5°F for a period of 8 hours. At the end of the soak period and at -65° ± 5°F, a 2000 lb. force exerted on a rubber covered member shall be applied on the duct. The force shall cover 6 inches of duct length and overhang the width of the duct when flattened. The force shall be removed after one minute. This test shall be repeated 25 times with an examination of the duct upon completion of the test. While at -65 ± 5°F, the duct shall be subjected to 100 flexing cycles near each end to permit internal inspection without destroying the duct. A flexing cycle shall consist of folding the duct back on itself and then returning it to the straight configuration. With the duct initially at -65 ± 5°F, it shall be subjected to 25 cycles of the endurance test (see 4.5.8). Damage to the duct as a result of any of the tests above shall be cause for rejection.

4.5.5 Bend radius and length. At a stabilized -65°F temperature, the duct assembly shall be pressurized to 30 psia and the minimum bend radius determined by bending the duct until it crimps or until it will not bend further without damage. The bend radius shall be measured to the center line of the duct. The duct shall not crimp at radii greater than 30 inches. With the duct pressurized to 30 psia, the ends shall be positioned so that a smooth radius of 30 to 36 inches prevails. The pressure shall then be released and the duct shall be placed in such a position that a 90 degree crimped bend exists. A 30 psia pressure shall then be applied. The duct shall automatically assume a smooth bend configuration when the pressure is applied.

4.5.6 High temperature soak. The duct shall be placed in a chamber and heated to and maintained at a temperature of 500° ±10°F for a period of 30 minutes. At the end of this time, while in the chamber at 500° ±10°F, the duct shall be subjected to a static proof pressure of 80 ±2 psia for 5 minutes. Ballooning, bursting or otherwise failure of the duct to withstand the above pressure shall be cause for rejection.

4.5.7 Pressure drop. The pressure drop through a 30-foot section of duct assembly shall not exceed 6 psi when installed as shown in Figure 4 under flow conditions of 4.5.8.

4.5.8 Endurance test. While installed as shown in Figure 4, the duct shall be subjected to a 1000 cycle test. Each cycle shall consist of flowing air through the duct at the rate of 100 ±5 pounds per minute at 80 ±2 psia total pressure with an inlet temperature of 600 $^{+0}_{-10}$ °F for one minute

Downloaded from http://www.everyspec.com

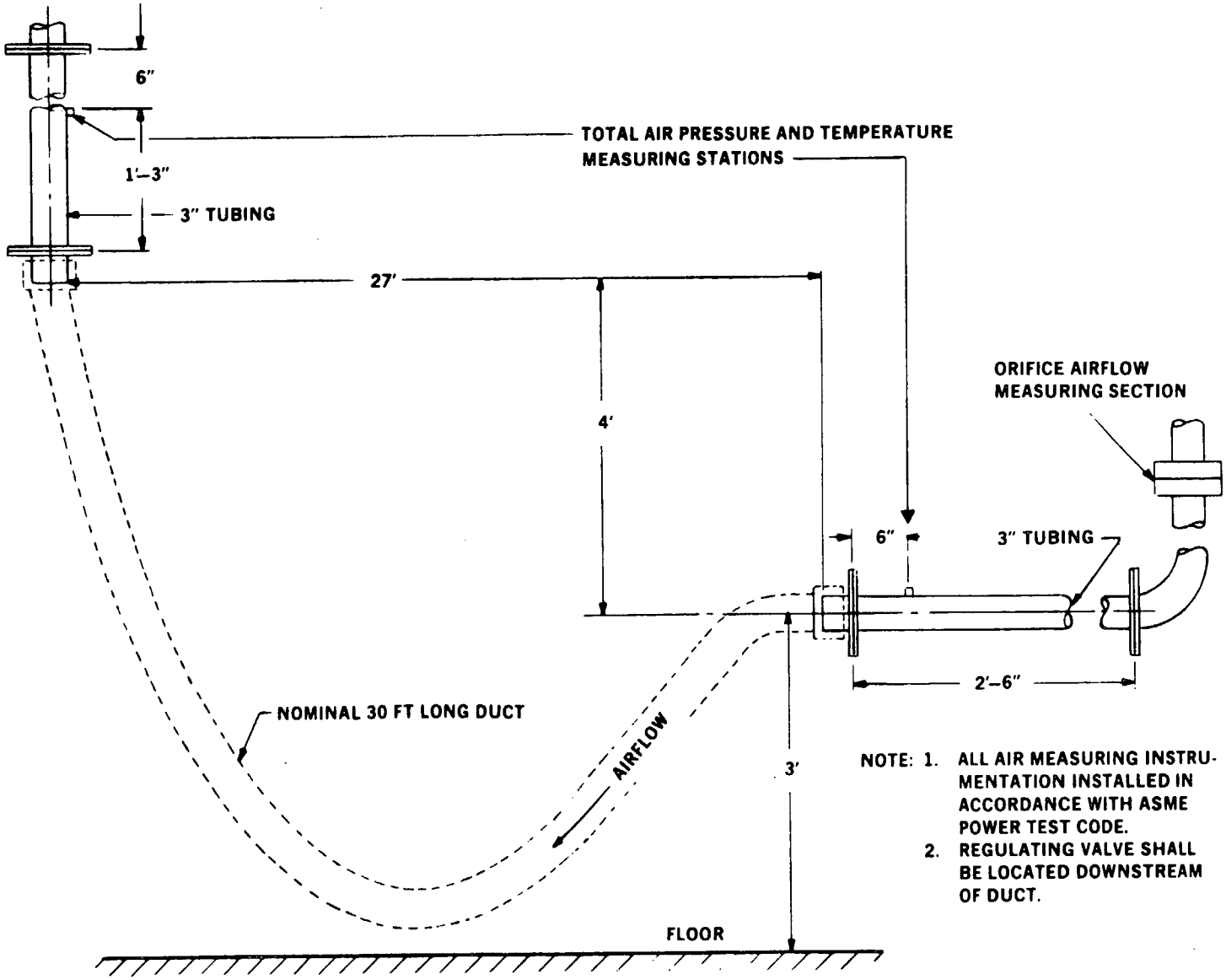

NOTE: 1. ALL AIR MEASURING INSTRUMENTATION INSTALLED IN ACCORDANCE WITH ASME POWER TEST CODE.
2. REGULATING VALVE SHALL BE LOCATED DOWNSTREAM OF DUCT.

FIGURE 4. Duct test installation.

Downloaded from http://www.everyspec.com

followed by one minute of no air flow. The duct shall be flexed 18 inches from the inlet end as described in 4.5.4 during the no flow portion of the cycle. This total elapsed time of 2 minutes shall constitute one cycle. The duct shall be in an environment with an ambient temperature of 130 $^{+10}_{-5}$ °F. A "warm up" period of 10 cycles is permissible to establish the 130°F ambient temperature within the tolerances specified. The 1000 cycle test may be conducted continously for a minimum of eight hours.

4.5.9 Fluid resistance. Six exterior adjacent one-foot sections approximately at the center of a 30-foot duct assembly, shall be saturated with each of the following fluids for five minutes:

a. Test fluid conforming to TT-S-735, Type III.

b. Test fluid conforming to TT-S-735, Type VI.

c. Engine lubricating oil conforming to MIL-L-7808 and MIL-L-23699.

d. Anti-icing fluid conforming to TT-I-735.

e. Hydraulic fluid conforming to MIL-H-5606.

f. Specification salt water (5% by weight).

This saturation shall be repeated five times at 24 hour intervals.

4.5.10 Environmental. The manufacturer shall verify and document environmental suitability of the materials. Suitability shall be indicated by the following tests in accordance with the specified procedures of MIL-STD-810:

a. Fungus resistance - The fungus resistance test shall be conducted in accordance with Method 508.

b. Sunshine - The sunshine test shall be in accordance with Method 505 for 100 hours.

c. Salt fog - The salt fog test shall be conducted in accordance with Method 509.

4.5.11 Abrasion resistance. The duct assembly (duct/scuff cover) shall be attached to a towing vehicle at one end of the assembly. The towing vehicle attachment point shall not be more than one foot above ground level. The duct assembly thus attached shall be dragged at a minimum of 5 miles per hour for 20,000 feet without rotation, on concrete (a dry, brushed surface subject to approval by the Naval Air Engineering Center (see 6.5). The test shall be repeated with the duct assembly being dragged by its opposite end. The test shall be repeated with the duct assembly bent 180 degrees at its midpoint and both ends attached to the towing vehicle. Following each drag test, the duct assembly shall be tested in accordance with 4.5.3.

Downloaded from http://www.everyspec.com

4.5.12 Pull test. The scuff cover shall be capable of withstanding a 1500 pound pull applied axially at the ends of the cover. Plugs shall be installed and clamped into each end of the cover. The plugs shall have attached hooks and one end shall be hooked to a fixed support while a 1500 pound pull is applied to the other end for a minimum of 5 minutes. Any separation of components, breaks in the braid cover, or breaks in the scuff cover strip shall be cause for rejection. The test shall be repeated after heating the scuff cover to 200°F for 24 hours.

4.5.13 Scuff strip adhesion test. The scuff strip adhesion test shall be conducted as follows. The scuff strip and bond strip interface shall be cut with a sharp knife. The two strips shall then be pulled away from each other. Separation of the scuff strip and band strip shall occur as tearing of the rubber rather than by pulling apart of one distinct strip from the other. If separation occurs along an apparent parting surface, this shall be cause for rejection.

5. PACKAGING

5.1 Preservation.

5.1.1 Level A. Ducts and scuff covers shall be preserved in accordance with MIL-P-116, method III.

5.1.2 Commercial packaging. Ducts and scuff covers shall be preserved and packaged in such a manner as to ensure adequate protection during shipment to the initial destination for immediate use.

5.2 Packing.

5.2.1 Level A. Ducts and scuff covers shall be packed in accordance with exterior type shipping containers conforming to PPP-B-585, PPP-B-601, PPP-B-621 or PPP-B-576. Exterior containers shall be of uniform shape and size, of minimum cube and tare consistent with the protection required, and shall contain identical quantities. The gross weight of each pack shall not be greater than 200 pounds. Containers shall be provided with a case liner conforming to MIL-L-10547 and shall be sealed in accordance with the appendix thereto.

5.2.2 Commercial packaging. Packages which require overpacking for acceptance by carrier shall be packed in exterior type shipping containers in a manner that will ensure safe transportation at the lowest rate to the point of delivery. Containers shall meet Consolidated Freight Classification rules or regulations of other common carriers, as applicable to the mode of transportation.

5.2.3 Physical protection. Cushioning, blocking, bracing and bolting as required shall be in accordance with MIL-STD-1186 except that waterproofing requirements for cushioning materials and containers shall be waived for domestic shipments. The drop tests of MIL-STD-1186 shall be waived when the item is preserved, packaged, and packed for immediate use or when the drop tests of MIL-P-116 are applicable.

Source: https://assist.dla.mil -- Downloaded: 2014-09-07T19:20Z

Downloaded from http://www.everyspec.com

5.3 Marking for shipment. Interior and exterior containers shall be marked in accordance with MIL-STD-129.

6. NOTES

6.1 Intended use. The duct covered by this specification is intended for use in delivering of high-flow, low-pressure air to aircraft starting and air conditioning systems.

6.2 Ordering data.

6.2.1 Aquisition requirements. Aquisition documents should specify the following:

a. Title, number, and date of this specification.

b. Type and class required (see 1.2).

c. Military part number (see 1.3 and 6.5).

d. Special marking, if required (see 3.8).

e. Level of packing (see 5.1).

6.3 Data. For the information of Contractors and Contracting Officers, any of the data specified in (a) applicable documents listed in Section 2 of this specification, or (b) referenced lower tier documents need not be prepared for the Government and shall not be furnished to the Government unless specified in the contract or order. The data to be furnished shall be listed on DD Form 1423 (Contractor Data Requirements List), which shall be attached to and made part of the contract or order.

6.4 Qualification. With respect to products requiring qualification, awards will be made only for products which are, at the time set for opening of bids, qualified for inclusion on the applicable Qualified Products List whether or not such products have actually been so listed by that date. The attention of the contractors is called to these requirements and manufacturers are urged to arrange to have the products that they propose to offer to the Federal Government tested for qualification in order that they may be eligible to be awarded contracts or purchase orders for the products covered by this specification. The activity responsible for the Qualified Products List is the Commander, Naval Air Systems Command, Department of the Navy, Washington, DC 20361, Attention: AIR-55231; information pertaining to qualification of products may be obtained from the Naval Air Enginering Center, Lakehurst, NJ 08733, Attention: 92613.

Downloaded from http://www.everyspec.com

6.5 Military part numbering system.

Example of Part Numbering:

M 22706 - X - XX = Part Number: M22706-D-30

- XX — Duct or Scuff Cover Length
- X — D designates duct only; S designates scuff cover only; DS designates duct and scuff cover
- 22706 — Specification number
- M — Prefix meaning MIL specification item

6.6 Changes from previous issue. Asterisks are not used in this revision to identify changes with respect to the previous issue, due to the extensiveness of the changes.

Preparing Activity:
Navy - AS
(Project No. 4720-N697)

Downloaded from http://www.everyspec.com

SECURING DUCT AND SCUFF COVER ASSEMBLY TO MS17833 AND MS17835 FITTINGS

Apparatus Manufacturer.

1. Band-It Division, Houdaille Industries Inc., Denver, CO 80216, Code Identification No. 70847

10. SCOPE

10.1 Scope. This appendix covers procedures to attach MS17833 and MS17835 fittings to the duct and scuff cover.

The duct shall be secured to male (MS17833) and female (MS17835) fittings with Band-It buckles (part number C-256) and bands (part number C-206).

To install the bands and buckles, place three 3/4 inch bands and three buckles on each end of the duct assembly for the purpose of attching the duct to the MS17833 and MS17835 fittings. The first two banks of MS17833 fittings (closest to the flanged end) shall have one band on each bank that will secure only the duct to the fitting. The third bank shall have a band on the exterior of the scuff cover to secure the cover to the fitting. Radially locate the buckles 120° apart around the duct. Install the clamps using the tool (C001) and nut (C040) manufactured by Band-It. Torque the clamps to a value of 100 inch pounds. While torquing, tap around the clamp to seat it firmly. Use the same procedures for the MS17835 fitting on the opposite end.

Downloaded from http://www.everyspec.com

(TO DETACH THIS FORM, CUT ALONG THIS LINE.)

STANDARDIZATION DOCUMENT IMPROVEMENT PROPOSAL

(See Instructions – Reverse Side)

1. DOCUMENT NUMBER	2. DOCUMENT TITLE
MIL-D-22706E(AS)	Duct and Scuff Cover, Pneumatic, Flexible

3a. NAME OF SUBMITTING ORGANIZATION	4. TYPE OF ORGANIZATION *(Mark one)*
	☐ VENDOR
b. ADDRESS *(Street, City, State, ZIP Code)*	☐ USER
	☐ MANUFACTURER
	☐ OTHER *(Specify)*:

5. PROBLEM AREAS

a. Paragraph Number and Wording:

b. Recommended Wording:

c. Reason/Rationale for Recommendation:

6. REMARKS

7a. NAME OF SUBMITTER *(Last, First, MI)* – Optional	b. WORK TELEPHONE NUMBER *(Include Area Code)* – Optional
c. MAILING ADDRESS *(Street, City, State, ZIP Code)* – Optional	8. DATE OF SUBMISSION *(YYMMDD)*

DD FORM 1426 PREVIOUS EDITION IS OBSOLETE.