Downloaded from http://www.everyspec.com

MIL-D-17847E(SH)
29 September 1987
SUPERSEDING
MIL-D-17847D(SHIPS)
27 June 1966
(See 6.8)

MILITARY SPECIFICATION

DEHYDRATOR, DESICCANT, SEMI-AUTOMATIC, HIGH PRESSURE AIR

This specification is approved for use within the Naval Sea Systems Command, Department of the Navy, and is available for use by all Departments and Agencies of the Department of Defense.

1. SCOPE

1.1 Scope. This specification covers adsorptive purification and dehydration equipment for removing solid contaminants and particulate and vaporous water and oil from shipboard high pressure air systems. The word dehydrator will be used to denote the entire complex of equipment throughout this specification.

1.2 Classification.

1.2.1 Classes. Dehydrators shall be of the following classes, as specified (see 6.2).

Class I - 3000 pounds per square inch (lb/in^2) gauge working pressure.
Class II - 5000 lb/in^2 gauge working pressure.

1.2.2 Capacity. The required capacity of the dehydrator shall be as specified (see 6.2). When practical, a unit with one of the following standard flow ratings should be selected.

(a) F-75 - 75 standard cubic feet per minute (ft^3/min) minimum capacity.
(b) F-100 - 100 ft^3/min minimum capacity.
(c) F-150 - 150 ft^3/min minimum capacity.

Beneficial comments (recommendations, additions, deletions) and any pertinent data which may be of use in improving this document should be addressed to: Commander, Naval Sea Systems Command, SEA 5523, Department of the Navy, Washington, DC 20362-5101 by using the self-addressed Standardization Document Improvement Proposal (DD Form 1426) appearing at the end of this document or by letter.

AMSC N/A FSC 4460
DISTRIBUTION STATEMENT A Approved for public release; distribution unlimited

Downloaded from http://www.everyspec.com

2. APPLICABLE DOCUMENTS

2.1 Government documents.

2.1.1 Specifications and standards. The following specifications and standards form a part of this specification to the extent specified herein. Unless otherwise specified, the issues of these documents shall be those listed in the issue of the Department of Defense Index of Specifications and Standards (DoDISS) and supplement thereto, cited in the solicitation.

SPECIFICATIONS

FEDERAL

QQ-N-288	- Nickel-Copper Alloy and Nickel-Copper-Silicon Alloy Castings.
QQ-S-763	- Steel Bars, Wire, Shapes, and Forgings, Corrosion-Resisting.

MILITARY

MIL-R-196	- Repair Parts, Accessories, and Kits, Mechanical; Packaging of.
MIL-S-901	- Shock Tests, H.I. (High-Impact); Shipboard Machinery, Equipment and Systems, Requirements for.
MIL-E-917	- Electrical Power Equipment, Basic Requirements for (Naval Shipboard Use).
DOD-D-1000	- Drawings, Engineering, and Associated Lists.
MIL-C-2212	- Controllers, Electric Motor A.C. or D.C., and Associated Switching Devices.
MIL-S-2940	- Snubbers, Fluid Pressure, Instrument Protection.
MIL-V-2961	- Valves, Pressure Reducing, For Gas Service (Sizes 1/4 to 2 Inches IPS).
MIL-G-5514	- Gland Design; Packings, Hydraulic, General Requirements for.
MIL-Q-9858	- Quality Program Requirements.
MIL-P-15024	- Plates, Tags and Bands for Identification of Equipment.
MIL-P-15024/5	- Plates, Identification.
MIL-M-15071	- Manuals, Technical: Equipments and Systems Content Requirements for.
MIL-P-15137	- Provisioning Technical Documentation for Repair Parts for Electrical and Mechanical Equipment (Naval Shipboard Use).
MIL-C-15726	- Copper-Nickel Alloy, Rod, Flat Products (Flat Wire, Strip, Sheet, Bar, and Plate) and Forgings.
MIL-I-16411	- Insulation Felt, Thermal, Glass Fiber.
MIL-T-16420	- Tube, Copper-Nickel Alloy, Seamless and Welded (Copper Alloy Numbers 715 and 706).
MIL-L-17331	- Lubricating Oil, Steam Turbine and Gear, Moderate Service.
MIL-E-17555	- Electronic and Electrical Equipment, Accessories, and Provisioned Items (Repair Parts): Packaging of.

Downloaded from http://www.everyspec.com

MIL-F-18866 - Fittings, Hydraulic Tube, Flared, 37 Degree and Flareless: Steel.
MIL-I-18997 - Indicator, Pressure, Panel Mounted or Case Supported, General Specification for.
MIL-R-19523 - Relays, Control, Naval Shipboard.
MIL-H-22577 - Heating Elements, Electrical; Cartridge, Strip and Tubular Type.
MIL-V-24109 - Valves, Globe, Angle, Quick Change Cartridge Trim, High Pressure (H.P.) Hydraulic and Pneumatic (Sizes 1/8 - 1-1/4 Inches.)
MIL-R-83248 - Rubber, Fluorocarbon Elastomer, High Temperature, Fluid, and Compression Set Resistant.

STANDARDS

MILITARY

DOD-STD-100 - Engineering Drawing Practices.
MIL-STD-105 - Sampling Procedures and Tables for Inspection by Attributes.
MIL-STD-167-1 - Mechanical Vibrations of Shipboard Equipment (Type I - Environmental and Type II - Internally Excited).
MIL-STD-271 - Requirements for Nondestructive Testing Methods.
MIL-STD-278 - Welding and Casting Standard.
MIL-STD-758 - Packaging Procedures for Submarine Repair Parts.
MIL-STD-769 - Thermal Insulation Requirements for Machinery and Piping.
DOD-STD-1399, Section 300 - Interface Standard for Shipboard Systems Electric Power, Alternating Current. (Metric)

2.1.2 Other Government drawings and publications. The following other Government drawings and publications form a part of this specification to the extent specified herein. Unless otherwise specified, the issues shall be those in effect on the date of the solicitation.

DRAWINGS

MILITARY

810-1385884 - Unions Fittings and Adapters, Butt and Socket Welding, 6000 PSI, WOG, Oxygen (IPS).
810-1385941 - Fittings, Silver-Brazing, WOG, 3000 PSI for U.T. Inspection.
810-1385943 - Unions, Silver Brazing, 3000 PSI, WOG, IPS for U.T. Inspection.
810-1385963 - Fittings, Silver-Brazing, Nickel-Aluminum-Bronze, for U.T. Inspection (IPS) 3000 and 5000 WOG.
9000-S6202-P-73907 - Light, Indicator (Switchboard), 2 Lamp, SPF, Types B-27A through B-27C.

Downloaded from http://www.everyspec.com

PUBLICATIONS

NAVAL SEA SYSTEMS COMMAND (NAVSEA)

0900-LP-001-7000 - Fabrication and Inspection of Brazed Piping Systems.

0938-LP-013-5010 - Technical Manual for Dehydrator-Desiccant, Semi-Automatic High-Pressure Air Model 1 SAHP 5000 EHE.

NAVSHIPS 250-537-1 - Radiographic Standards for Bronze Castings.

NAVSHIPS 250-537-2 - Radiographic Standards for Bronze Castings for Radium, Cobalt (60) and High Voltage X-Rays (1000 KVP and Over).

(Copies of specifications, standards, drawings and publications required by contractors in connection with specific acquisition functions should be obtained from the contracting activity or as directed by the contracting activity.)

(NAVSHIPS 250-537-1 available as P.B. #131854 and 250-537-2 available as P.B. #151351 from the Clearing House for Federal Scientific Technical Information, Department of Commerce, 2585 Port Royal Road, Springfield, VA 22151.)

NAVSHIPS 250-692-13 - Radiographic Standards for Steel Castings - Supplement 1 for Nickel-Copper, Copper-Nickel and Aluminum-Bronze Alloy Castings.

(Copies of Supplement 1 should be obtained from Naval Ship Engineering Center, Code 6634, Department of the Navy, Washington, DC 20360.)

2.2 Other publications. The following documents form a part of this specification to the extent specified herein. Unless otherwise specified, the issues of the documents which are DoD adopted shall be those listed in the issue of the DoDISS specified in the solicitation. Unless otherwise specified, the issues of documents not listed in the DoDISS shall be the issue of the nongovernment documents which is current on the date of the solicitation.

AMERICAN NATIONAL STANDARDS INSTITUTE (ANSI)

B16.11 - Forged Steel Fittings, Socket-Welding and Threaded. (DoD adopted)

(Application for copies should be addressed to the American National Standards Institute, 1430 Broadway, New York, NY 10018.)

AMERICAN SOCIETY OF MECHANICAL ENGINEERS (ASME)

Boiler and Pressure Vessel Code.

(Application for copies should be addressed to the American Society of Mechanical Engineers, 345 East 47th Street, New York, NY 10017).

Downloaded from http://www.everyspec.com

AMERICAN SOCIETY FOR TESTING AND MATERIALS (ASTM)

A 312 - Standard Specification for Seamless and Welded Austenitic Stainless Steel Pipe. (DoD adopted)

A 484 - Standard Specification for General Requirements for Stainless and Heat-Resisting Bars, Billets and Forgings. (DoD adopted)

A 555 - Standard Specification for General Requirements for Stainless and Heat Resisting Steel Wire and Wire Rods. (DoD adopted)

A 581 - Standard Specification for Free-Machining Stainless and Heat-Resisting Steel Wire. (DoD adopted)

A 582 - Standard Specification for Free-Machining Stainless and Heat-Resisting Steel Bars, Hot-Rolled or Cold-Finished. (DoD adopted)

E 446 - Standard Reference Radiographs for Steel Castings Up to 2 in. (51 mm) in Thickness. (DoD adopted)

(Application for copies should be addressed to the American Society for Testing and Materials, 1916 Race Street, Philadelphia, PA 19103.)

UNIFORM CLASSIFICATION COMMITTEE AGENT

Uniform Freight Classification Ratings, Rules and Regulations

(Application for copies should be addressed to the Uniform Classification Committee Agent, Tariff Publication Officer, Room 1106, 222 South Riverside Plaza, Chicago, IL 60606.)

(Nongovernment standards and other publications are normally available from the organizations which prepare or which distribute the documents. These documents also may be available in or through libraries or other informational services.)

2.3 Order of precedence. In the event of a conflict between the text of this specification and the references cited herein (except for associated detail specifications, specification sheets or MS standards), the text of this specification shall take precedence. Nothing in this specification, however, shall supersede applicable laws and regulations unless a specific exemption has been obtained.

3. REQUIREMENTS

3.1 First article. When specified in the contract or purchase order, a sample shall be subjected to first article inspection (see 4.3 and 6.4).

3.2 Quality program requirements. Dehydrators furnished under this specification shall be manufactured under a quality program which has been accepted as meeting the requirements of MIL-Q-9858.

3.3 General requirements. Dehydrators furnished under this specification shall be self-reactivating, dual tower, disiccant type units utilizing heat for reactivation. Operation of these units shall be semi-automatic as defined in 6.5(i). The basic configuration is shown schematically on figure 1. Additional general requirements are as follows:

Downloaded from http://www.everyspec.com

(a) Dehydrators shall be suitable for both continuous and intermittent operation.

(b) The dehydrator shall meet the effluent air requirements specified in 3.6.2 for a minimum of 1000 cycles without changing desiccant. This is based on the influent air conditions specified in 3.6.1 for each dehydration period (see 6.5(c)) and an ambient temperature range of 60 to 130 degrees Farenheit (°F).

(c) Reactivation air requirement shall not exceed 10 percent of the dehydrator design capacity.

(d) Air flow through the towers shall be downward during dehydration and depressurization periods.

(e) All filters, valving, instrumentation, heating elements, terminal connections, controls, and dehydration towers shall be accessible for maintenance, repair, and cleaning from the front of the dehydrator. No external connections shall be piped or wired to the back of the dehydrator.

(f) All piping and pressure containing components shall operate at the working pressure specified (see 1.2.1) and shall be constructed in accordance with the applicable sections of the ASME Boiler Construction Code for Unfired Pressure Vessels, or as specified herein.

(g) Lugs, suitable for use with a chain hoist or similar lifting equipment, shall be provided on the dehydrator.

(h) The dehydrator shall be operable from the shipboard 440 volt, 3 phase, 60 cycle, type I power supply as specified in DOD-STD-1399, section 300. It shall operate from one phase as shown on figure 2.

(j) The following components shall be conveniently located for operation and visibility:

(1) Flow selector valves.
(2) Reactivating air exhaust valves.
(3) Tower depressurization valves.
(4) Pre-filter drain valve.
(5) All pressure and temperature gauges.
(6) Control panel.

3.4 Materials. All materials shall be corrosion-resistant and suitable for use in a marine atmosphere. Material selections shall be as approved by the contracting activity.

3.4.1 Recovered materials. Unless otherwise specified herein, all equipment, material, and articles incorporated in the products covered by this specification shall be new and may be fabricated using materials produced from recovered materials to the maximum extent practicable without jeopardizing the intended use. The term "recovered materials" means materials which have been collected or recovered from solid waste and reprocessed to become a source of raw materials, as opposed to virgin raw materials. None of the above shall be interpreted to mean that the use of used or rebuilt products is allowed under this specification unless otherwise specifically specified.

Downloaded from http://www.everyspec.com

3.5 Construction.

3.5.1 Piping. Piping shall be seamless construction in accordance with either composition 70-30 of MIL-T-16420 or grade TP-316L or 304L of ASTM A 312. Minimum allowable wall thickness shall be determined by the following formula:

$$T = \frac{PD}{2(S + 0.4P)}$$

Where:

T = Minimum allowable design wall thickness in inches.

D = Nominal outside diameter in inches.

P = Working pressure (see 1.2.1).

S = Maximum allowable material fiber stress due to internal pressure at the system operating temperature.

In no case shall pipe with nominal wall thickness less than schedule 80 be used.

3.5.2 Fittings. Taper pipe thread connections shall not be used. Fittings in accordance with MIL-F-18866 may be used for gauge piping.

3.5.2.1 Class I, dehydrators. Fittings used in line piping shall be welding end fittings specified in 3.5.2.2 or silver-brazing end fittings in accordance with Drawing 810-1385941 or 810-1385963. For takedown joints, unions in accordance with Drawing 810-1385884 or 810-1385943 shall be used, except that the union nuts materials shall be either H monel, composition B of QQ-N-288 or corrosion-resisting steel, composition 303 Se or 416 Se of ASTM A 484, A 582, A 555 or A 581.

3.5.2.2 Class II dehydrators. Fittings used in line piping shall be in accordance with ANSI B16.11. The materials of these fittings shall be forged copper-nickel alloy in accordance with MIL-C-15726 or corrosion-resisting steel, Class 316 or 304 L of QQ-S-763. For take-down joints, unions in accordance with Drawing 810-1385884 shall be used, except that the union nuts materials shall be either H monel, composition B of QQ-N-288 or corrosion-resisting steel, composition 303 Se or 416 Se of ASTM A 484, A 582, A 555 or A 581.

3.5.3 Manifold assemblies. Manifold assemblies (see figure 1) shall be as follows:

(a) Valves 1, 2, 3, 4, 5 and 6 and the orifice shall be furnished as a manifold assembly. Provision shall be made to connect pressure gauges 7, 8, and 9 and pressure switches 10, 11, and 12 to the manifold. Provisions shall be made to limit the temperature of this manifold to 180°F. Valve cartridges shall be in accordance with MIL-V-24109. Pressure gauges shall be in accordance with MIL-I-18997 modified to meet the shock requirements of MIL-S-901. These gauges shall be fitted with snubbing devices in accordance with MIL-S-2940. The purge pressure gauge shall be protected from pressures exceeding its design working pressure.

Downloaded from http://www.everyspec.com

(b) Valves 13, 14, 15 and 16 and filters 17 and 18 shall be furnished as a manifold assembly. Combination Pump Valve Company Number 665 check valve cartridge, or equal, modified for 400°F service shall be used. Filter elements shall withstand a differential pressure equal to the working pressure specified (see 1.2.1) in the normal flow direction during adsorption and a differential pressure equal to 500 lb/in^2 in reverse flow during reactivation and have a 5 micrometer nominal, 18 micrometer absolute removal rating for gas service.

3.5.4 Pressure reducing valve. The reactivating air pressure reducing valve, item 19 of figure 1, shall be in accordance with MIL-V-2961. Design of the valve shall emphasize ruggedness, reliability, simplicity and ease of maintenance. The valve shall require no adjustments after assembly other than the set point adjustment. The valve shall be of basic balanced poppet design and shall maintain the specified accuracy of regulation with inlet pressure variations over a range of 500 to 4500 lb/in^2 gauge. The valve shall be sized to pass the required purge flow with an inlet pressure of 500 lb/in^2 gauge.

3.5.5 Back pressure valve. The basic material and construction requirements for the back pressure regulating valve, item 20 of figure 1, shall be the same as those invoked on the pressure reducing valve in 3.5.4. The valve shall have an accuracy of regulation sufficient to prevent the air velocities through the towers from exceeding the design limits when the back pressure varies over the range of zero to 4500 lb/in^2 gauge. The valve shall be sized to pass rated flow of the dehydrator with a pressure drop of no more than 30 lb/in^2.

3.5.6 Solenoid valve. The two-way two-position solenoid valve, item 21 of figure 1, shall open and close against an inlet pressure differential of 5000 lb/in^2. The valve shall incorporate a soft seating feature and all trim shall be designed for rapid replacement. Materials shall be in accordance with MIL-V-2961. The solenoids shall conform to the electrical requirements of MIL-E-917. Design of the valve shall emphasize ruggedness, reliability, simplicity, and ease of maintenance.

3.5.7 Pre-filter. The pre-filter, item 22 of figure 1, shall remove solid contaminants, particulate oil and water and oil vapor. The filter sump shall be provided with a valve drain line. The valve shall incorporate a soft seating feature.

3.5.8 Gaskets. Gaskets shall be suitable for the pressure and temperatures to which they will be subjected and shall be compatible with 2190 TEP lubricating oil of MIL-L-17331. Pressure seals shall be type I of MIL-R-83248 for temperatures below 180°F, and as approved by the command or agency concerned for temperatures over 180°F.

3.5.8.1 Gland finishes and dimensions. O-ring gland finishes and dimensions shall meet the requirements of MIL-G-5514. Back-up rings shall be provided to prevent O-ring extrusion for pressures exceeding 1500 lb/in^2.

Downloaded from http://www.everyspec.com

3.5.9 Dehydration towers. Dehydration towers, items 25 and 26 of figure 1, shall be as follows:

(a) Towers shall have a removable head to facilitate replacement of desiccant and inspection of tower internals. Removal of the head shall give access to the full inside diameter of the tower.
(b) The desiccant beds shall be fully packed and spring loaded to preclude desiccant break-up due to shock, vibration, and attrition. The springs shall be compressed or provided with a restraint to limit spring movement to a maximum of 1/2 inch under a compressive load.

3.5.10 Desiccant. The following properties shall be optimized in selecting a desiccant:

(a) Ability to maintain a low dew point (see 6.5(a)).
(b) Good physical strength.
(c) Low pressure drop.
(d) Resistance to fouling.
(e) Ability to remove hydrocarbons.
(f) A 400°F maximum required reactivation air temperature.

3.5.11 Heater. Heater, item 27 of figure 1, shall be as follows:

(a) Tubular type heater elements with hermetic end seals in accordance with MIL-H-22577 shall be used. These elements shall operate at 5000 lb/in^2 gauge pressure.
(b) A temperature controller with an adjustable set point and indicating feature shall be provided to limit the maximum temperature of the reactivating air.

3.5.12 Control panel. A control panel shall be provided which incorporates the following features (see figure 3):

(a) Power on-off switch and indicator light.
(b) A timer to record tower dehydration operating time for each cycle (see 6.1(b)).
(c) Indicator lights for each tower to show:
  (1) When tower is on dehydration service.
  (2) When tower is being reactivated, that is, the heating and cooling period (see 6.1(e) and (f)).
  (3) When tower is on stand-by (see 6.5(g)), that is, end of heating and cooling period.
(d) Reactivation cycle indicator to show position of the repeat cycle program timer.
(e) A reactivation start switch.
(f) An indicator light to show when heater is on.
(g) An indicator light to show when heater temperature is too high.
(h) A test switch to check condition of indicator lights.

3.5.13 Control circuit. A control circuit as shown schematically on figure 2 shall be provided. A number of safety and convenience features shall be incorporated in this circuit to:

Downloaded from http://www.everyspec.com

(a) Keep tower reactivation in phase with the repeat cycle program timer.
(b) Secure heater when the reactivating air temperature is too high and actuate a warning light.
(c) Secure heater, heater on light, reactivating light, and repeat cycle timer when:
  (1) No reactivating air is available.
  (2) Depressurization valve on tower being reactivated is inadvertently left open.
  (3) Flow selector valve on tower being reactivated is inadvertently left open.
  (4) Reactivating air exhaust valve on tower being reactivated is inadvertently left closed.
(d) Secure reactivating air at end of cooling period.
(e) Stop the dehydration timer when the compressor stops.

3.5.14 Indicator lights. Indicator lights shall be in accordance with types B-27A or B-27F of Drawing 9000-S6202-F-73907.

3.5.15 Contactors and switches. Contactors and switches (excluding pressure switches and relays) shall be in accordance with MIL-C-2212.

3.5.15.1 Relays. Relays shall be in accordance with MIL-R-19523.

3.5.15.2 Pressure switches. Pressure switches shall be as approved by the contracting activity. The switches shall:

(a) Have a dripproof enclosure.
(b) Be capable of at least 25,000 operations at rated voltage and current.
(c) Repeat within plus or minus 1 percent.
(d) Comply with MIL-E-917.
(e) Have an insulation resistance not less than 10 megohms.
(f) Have the pressure connection in accordance with 3.5.2.
(g) Have the pressure capsule material in accordance with 3.4.
(h) Have a minimum proof pressure of 1-1/2 times the working pressure specified (see 1.2.1) with the following exception. A minimum proof pressure equal to the working pressure would be acceptable for the purge air pressure switch provided a protection device is installed to limit air pressure to the pressure switch from exceeding working pressure.

3.5.16 Timers.

3.5.16.1 Repeat cycle timer. The repeat cycle program timer shall:

(a) Have a normal switch life of 50,000 operations, minimum, at rated voltage and current.
(b) Have a motor life of at least 10,000 hours.
(c) Have an insulation resistance not less than 10 megohms.
(d) Suspend operation in case of power failure and then automatically resume operation when power is restored.
(e) Indicate visually the different phases of reactivation cycle (see figure 3).

Downloaded from http://www.everyspec.com

3.5.16.2 Dehydration timer. The dehydration timer shall incorporate the features of (b), (c) and (d) of 3.5.16.1 and the following:

(a) Have an adjustable automatic shut-off point.
(b) Have a manual reset.
(c) Have a repeat accuracy within plus or minus 1/2 of 1 percent of full scale.
(d) Have a 24-hour read-out time (see figure 3).
(e) Have an adjustable marker to indicate permissible dehydration time for one tower. This time (T) is a function of the actual flow conditions of the system in which the dehydrator is to be installed. Time (T) may be determined by the following equation:

$$T = 4 \text{ hours} \times \frac{\text{Flow rating (see 1.2.2)}}{\text{Actual flow (standard ft}^3\text{/min)}}$$

3.5.17 Safety. The desiccant towers and heater shall be insulated to prevent injury to operating personnel. The insulation material shall be glass fiber felt in accordance with MIL-I-16411 and the nominal thickness of the material shall be in accordance with the requirements of MIL-STD-769 for thickness of insulating materials for hot surfaces of machinery and equipment up to 850°F. Metal lagging, in accordance with the requirements of MIL-STD-769 for metal lagging, shall be provided to contain and protect the insulation material.

3.5.18 Welding. Welding and allied processes shall be in accordance with MIL-STD-278.

3.5.19 Brazing. Fabrication and inspection of all brazed joints shall be in accordance with NAVSHIPS 0900-LP-001-7000. In addition, quality control records for each brazed piping joint shall be maintained in accordance with the requirements of NAVSHIPS 0900-LP-001-7000 for quality control records.

3.5.20 Radiography. Radiographic examination shall be performed in accordance with MIL-STD-271 on all pressure containing castings as specified in table I.

TABLE I. Radiography requirements.

Dehydrator class	Casting size	Alloy type	Wall thickness	Acceptance standard	Acceptance class
I	Over 2 inch nps	Ferrous	Less than 1 inch	NAVSHIPS 250-692-13 or ASTM E 446	Class 1
			1 inch and over		Class 2
		Nickel base, copper-nickel or aluminum-bronze	1 inch or less	NAVSHIPS 250-692-13 and Supplement 1 thereto and ASTM E 446	Class 2
			Over 1 inch		Class 3
		Tin bronze	1/2 inch and less	NAVSHIPS 250-537-1	Class 2 with no restriction shrinkage
			Over 1/2 inch	NAVSHIPS 250-537-2	Class 3 except shrinkage may be class 4
II	1/2 inch and larger	Ferrous	Less than 1 inch	NAVSHIPS 250-692-13 or ASTM E 446	Class 1
			1 inch and over		Class 2
		Nickel base, copper-nickel or aluminum-bronze	1 inch and less	NAVSHIPS 250-692-13 and Supplement 1 thereto and ASTM E 446	Class 2
			Over 1 inch		Class 3
		Tin bronze	1/2 inch and less	NAVSHIPS 250-537-1	Class 2 with no restriction on shrinkage
			Over 1/2 inch	NAVSHIPS 250-537-2	Class 3 except shrinkage may be class 4

Downloaded from http://www.everyspec.com

Downloaded from http://www.everyspec.com

3.5.21 Interchangeability. In no case shall parts be physically interchangeable or reversible unless such parts are also interchangeable or reversible with regard to function, performance and strength.

3.6 Performance.

3.6.1 Influent air conditions. Influent air conditions shall be as follows:

(a) Temperature 105°F.
(b) Pressure as specified (see 1.2.1).
(c) Flow as specified (see 1.2.2).
(d) Water content - saturated (see 6.5(h)).
(e) Oil content (lubricating oil symbol 2190 TEP in accordance with MIL-L-17331) - 1.0 part per million by weight.

3.6.2 Effluent air requirements. Effluent air requirements shall be as follows:

(a) Temperature - 115°F maximum.
(b) Water content - not to exceed a dew point of minus 60°F at operating pressure.
(c) Oil content - not to exceed 0.1 part per million by weight.
(d) Dirt or particulate contaminant - 18 micrometers maximum.

3.6.3 Dehydration period. The dehydration period, with air at the conditions specified in 3.6.1, shall be not less than 4 hours.

3.6.4 Reactivation period (see 6.5(d)). The required reactivation period shall not exceed 4 hours.

3.6.5 Pressure drop. The dehydrator shall pass the influent air specified in 3.6.1 with a maximum pressure drop of 50 lb/in^2.

3.6.6 Shock and vibration. The dehydrator shall be resistant to mechanical shock and vibration as encountered on board ship. The dehydrator shall pass the shock and vibration tests specified (see 4.6.3).

3.7 Marking.

3.7.1 Nameplate markings. The following data shall be included on nameplates in legible markings:

(a) Manufacturer's name, identification or model number, serial number, contract or order number, date of manufacture and any other pertinent information.
(b) Design characteristics; namely, working pressure, capacity, electrical data (for example voltage) dew point and oil content of influent and effluent air, and any other pertinent information.

Downloaded from http://www.everyspec.com

3.7.2 Identification plates. Identification plates in accordance with MIL-P-15024 and MIL-P-15024/5 shall be installed on the equipment. They shall be securely attached to a part of the equipment which will not be ordinarily renewed during normal service life. They shall be located in a readily accessible position where they can be read at all times without danger to personnel.

3.7.3 Piping connections. Inlet and outlet air connections shall be designated.

3.7.4 Electrical and mechanical controls. Electrical and mechanical controls shall be suitably marked.

3.7.5 Instruction plate. An operating and safety instruction plate in accordance with MIL-P-15024 and MIL-P-15024/5 shall be provided to give the operator a clear, consise, step-by-step procedure for energizing the dehydrator and for shifting from one desiccant tower to another. It shall include operation of the timer control and the control valves in conjunction with the various indicator lights. The instruction plate shall also include a schematic flow diagram with the components identified therein. Any safety precautions required for safe operation and maintenance shall also be included.

3.8 Drawings. When the Government has limited rights in the data shown on these drawings as determined by the contractural provisions regarding rights in technical data, the drawings furnished herewith should be marked with the following restrictive legend:

> "Furnished under United States Government Contract No._____. Shall not be either released outside the Government, or duplicated, or disclosed in whole or in part for manufacture or procurement, without the written permission of _____, except for: (a) emergency repair or overhaul work by or for the Government, where the item or process concerned is not otherwise reasonably available to enable timely performance of the work; or (b) release to a foreign government, as the interests of the United States may require; provided that in either case the release, use, duplication or disclosure hereof shall be subject to the foregoing limitations. This legend shall be marked on any reproduction hereof in whole or in part."

3.8.1 Bid drawings. Drawings which are sufficient to permit evaluation of the design and approval of materials shall be submitted as specified (see 6.3). The drawings shall show the following:

(a) Accurately scaled cross-sectional assembly and subassemblies which clearly depict the design and construction of the equipment.
(b) Bill of material listing specifications, grade, condition or other data adequate to identify materials proposed.
(c) Outlined dimensions, disassembly space, location and size of end connections and location of mounts.
(d) Estimated dry weight and limitations on installation.
(e) Location of center of gravity.
(f) Wiring diagrams and schematics.
(g) Flow diagram.

Downloaded from http://www.everyspec.com

3.8.2 Ship equipment drawing. Ship equipment drawings shall be in accordance with DOD-STD-100 and DOD-D-1000.

3.8.2.1 Preliminary drawings. Preliminary drawings shall be submitted to the command or agency for approval prior to starting fabrication. The drawings shall include the information required by 3.8.1, and the following:

(a) Assembly and details of all piping components. "Form, fit, and function" data shall be specified on the drawings. Detail drawings shall show dimensions, finishes, concentricity, parallelism and squareness requirements, material condition requirements and all other information applicable to the manufacture and inspection of the part detailed.
(b) Assembly drawings of all other components.
(c) Fabrication drawings depicting all pressure vessel, piping component, and piping welds. Welding and inspection procedures shall be specified on the drawings.
(d) Fabrication drawings listing welding and inspection procedures for any other welded assembly which requires procedure approval as specified in MIL-STD-278.
(e) Fabrication drawings depicting all pressure containing brazed joints. Brazing and inspection procedures shall be specified on the drawings, and qualification test results submitted when required by NAVSHIPS 0900-LP-001-7000.

3.8.2.2 Final drawings. Final drawings shall include all changes required by the drawings approved by the command or agency concerned and the information indicating validation by the command or agency concerned granting approval. The drawings shall depict the equipment actually furnished.

3.9 Manuals. Manuals shall be in accordance with type I of MIL-M-15071. The manuals shall contain all information necessary for installation, operation, and maintenance, and repair of the basic equipment and sub-components without the services of the manufacturer. The format, extent of details and completeness shall be at least comparable to NAVSHIPS 0938-LP-013-5010.

3.10 Repair parts. On board and stock repair parts shall be furnished in accordance with MIL-P-15137. On board and stock repair parts shall consist of the following:

Item	Quantity
Timers	100 percent
After filter elements	100 percent
Temperature switch	100 percent
Gasket and seals	200 percent
Pre-filter element	100 percent
H.p. pressure switch	50 percent
Heating element	1 each
Desiccant	1 recharge

3.10.1 Other repair parts as recommended by the supplier and approved by the command or agency concerned shall also be included.

Downloaded from http://www.everyspec.com

3.11 Special tools. If required, special tools or equipment shall be furnished for adjusting, disassembly and servicing of the unit. Special tools are defined as those tools not listed in the Federal Supply Catalog (copies of this catalog may be consulted in the office of the Defense Contract Administration Services Management Area (DCASMA)).

4. QUALITY ASSURANCE PROVISIONS

4.1 Responsibility for inspection. Unless otherwise specified in the contract or purchase order, the contractor is responsible for the performance of all inspection requirements as specified herein. Except as otherwise specified in the contract or purchase order, the contractor may use his own or any other facilities suitable for the performance of the inspection requirements specified herein, unless disapproved by the Government. The Government reserves the right to perform any of the inspections set forth in the specification where such inspections are deemed necessary to assure supplies and services conform to prescribed requirements.

4.1.1 Responsibility for compliance. All items must meet all requirements of sections 3 and 5. The inspection set forth in this specification shall become a part of the contractor's overall inspection system or quality program. The absence of any inspection requirements in the specification shall not relieve the contractor of the responsibility of assuring that all products or supplies submitted to the Government for acceptance comply with all requirements of the contract. Sampling in quality conformance does not authorize submission of known defective material, either indicated or actual, nor does it commit the Government to acceptance of defective material.

4.2 Classification of inspections. The inspection requirements specified herein are classified as follows:

(a) First article inspection (see 4.3).
(b) Quality conformance inspection (see 4.4).

4.3 First article inspection. One dehydrator of each class and capacity representing production equipment in all respects, shall be submitted to the U.S. Navy Marine Engineering Laboratory, Annapolis, Maryland for examination and testing to determine conformance to the requirements of this specification. This inspection shall include and be in the following order:

(a) Examination (see 4.5).
(b) Hydrostatic test (see 4.6.4).
(c) Air leakage test (see 4.6.5).
(d) Performance test (see 4.6.1).
(e) Vibration test (see 4.6.3).
(f) Mechanical shock test (see 4.6.3).

4.3.1 Prior to submission of the dehydrator for first article inspection, the contractor shall perform all necessary tests, including oil and dirt removal, hydrostatic, leakage and operating test (see 4.6.2, 4.6.4, 4.6.5, and 4.6.6) to insure that the design is sound and the dryer will meet the first article inspection requirements. The first article unit shall be shipped with the desiccant removed from the towers and filters as applicable. Desiccants shall be packaged in separate packages and in proper proportions for each use.

Downloaded from http://www.everyspec.com

4.3.2 Waiver of first article inspection. A waiver of the first article inspection will be granted on subsequent orders for the same application and may be granted when the manufacturer has verifiable evidence that the dehydrator he proposes can meet the specified performance requirements, providing such evidence contains actual test, examination, or other verifiable quality data. No changes from the first article unit examined and tested will be acceptable without the approval of the command or agency concerned.

4.4 Quality conformance inspection.

4.4.1 Lot. All dehydrators of the same class and capacity offered for delivery at one time under one contract or order shall be considered a lot for purposes of quality conformance inspection.

4.4.2 Sampling for examination and hydrostatic and leakage tests. A random sample of dehydrators shall be selected from each lot, in accordance with inspection level II of MIL-STD-105, for the examination of 4.5 and the tests of 4.6.4 and 4.6.5. The acceptable quality level (AQL) shall be 1.5 percent defective. For sample size 15 the acceptance number shall be zero, and for 25 it shall be one.

4.4.3 Sampling for operating test. All dehydrators offered for delivery, shall be subjected to the operating test specified in 4.6.6.

4.5 Examination. Each sample dehydrator selected in accordance with 4.4.2 shall be examined to determine conformance to the requirements of this specification and the approved drawings. Equipment shall be surface examined including visual examination for defects, workmanship, dimensions and any other requirements not involving tests.

4.6 Tests.

4.6.1 Performance test. The complete dehydrator shall be assembled with all controls, indicators, dessicant, and accessory apparatus. It shall operate for 150 hours with normal operating pressure and rated capacity. The operating period shall include normal daily shutdown and startup, some of which shall be arranged to occur at intervals not coinciding with the start of a drying cycle. During this test, all manual and automatic devices and all instruments shall be observed and operability shall be demonstrated. During this test the drying performance shall meet the requirements specified in 3.6.2. At least one measurement of dew point shall be taken per hour.

4.6.2 Oil and dirt removal test. Tests shall be conducted to determine the ability of the dehydrator to meet the oil and dirt removal requirement specified in 3.6.2. The test installation shall consist of a closed system into which measured amounts of contaminants can be introduced. Full flow sampling of effluent air shall be used to determine the efficiency of purification. The sample collecting arrangement shall consist of filtering devices arranged in series, some having the capability of removing particulate matter down to 0.3 micrometers and other being able to adsorb vapors.

Downloaded from http://www.everyspec.com

4.6.3 Vibration and shock test. Upon successful conclusion of the tests specified in 4.6.1 and 4.6.2, the dehydrator shall be tested for resistance to vibration in accordance with MIL-STD-167-1 and for resistance to shock in accordance with grade A, class I of MIL-S-901. During these tests, the unit shall be subjected to hydrostatic (water) pressure equal to the normal operating pressure. After completion of these tests, and if examination reveals no serious damage, the unit shall be operated a sufficient length of time to demonstrate normal performance.

4.6.4 Hydrostatic test. Each sample dehydrator selected in accordance with 4.4.2 shall be hydrostatically tested to 150 percent of normal operating pressure for 1/2 hour. Any leakage, porosity or permanent deformation will be cause for rejection.

4.6.5 Leakage test. Each sample dehydrator selected in accordance with 4.4.2 shall be tested for leakage with air at the normal operating pressure for 1/2 hour. The leakage rate shall not exceed one percent of the design flow rate.

4.6.6 Operating test. All dehydrators offered for delivery shall be operated to verify that automatic features, electrical equipment, and instrumentation are working properly. Reduced pressures and flow rates may be used for this purpose.

4.7 Inspection of packaging. Sample packages and packs, and the inspection of the preservation-packaging, packing and marking for shipment and storage shall be in accordance with the requirements of section 5 and the documents specified therein.

5. PACKAGING

(The packaging requirements specified herein apply only for direct Government acquisition. For the extent of applicability of the packaging requirements of reference documents listed in section 2, see 6.6.)

5.1 Domestic shipment and early equipment installation and for storage of on board repair parts.

5.1.1 Dehydrator.

5.1.1.1 Preservation and packaging. Preservation and packaging which may be the contractor's commercial practice, shall be sufficient to afford adequate protection against corrosion, deterioration and physical damage during shipment from the supply source to the using activity and until early installation.

5.1.1.2 Packing. Packing shall be accomplished in a manner which will insure acceptance by common carrier at the lowest rate and will afford protection against physical or mechanical damage during direct shipment from the supply source to the using activity for early installation. The shipping containers or method of packing shall conform to the Uniform Freight Classification Ratings, Rules and Regulations or other carrier regulations as applicable to the mode of transportation and may conform to the contractor's commercial practice.

Downloaded from http://www.everyspec.com

5.1.1.3 Marking. Shipment marking information shall be provided on interior packages and exterior shipping containers in accordance with contractor's commerical practice. The information shall include nomenclature, National stock number or manufacturer's part number, contract or order number, contractor's name and destination.

5.1.2 On board repair parts. On board repair parts shall be preserved and packaged level A, packed level C, and marked levels A and C respectively in accordance with MIL-E-17555 and MIL-R-196 as applicable. For submarine application, level A preservation and packaging methods shall be modified in accordance with MIL-STD-758.

5.2 Domestic shipment and storage or overseas shipment and for stock repair parts. The requirements and levels of preservation, packaging, packing, and marking for shipment shall be as specified by the contracting activity (see 6.2).

5.2.1 The following provides various levels of protection during domestic shipment and storage or overseas shipment which may be required when acquisition is made.

5.2.2.1 Preservation and packaging. Preservation and packaging shall be level A or C as specified in accordance with MIL-R-196 or MIL-E-17555, as applicable. For submarine applications, level A preservation and packaging shall be modified in accordance with MIL-STD-758.

5.2.1.2 Packing. Packing shall be levels A or B as specified in accordance with MIL-R-196 and MIL-E-17555, as applicable.

5.2.1.3 Marking. Marking shall be as specified in accordance with MIL-R-196 and MIL-E-17555, as applicable.

6. NOTES

6.1 Intended use. The dehydrators covered by this specification will be connected to the discharge side of a constant displacement air compressor. These compressors are used to charge high pressure air bottles from atmospheric conditions to working pressure.

6.2 Ordering data. Acquisition documents should specify the following:

(a) Title, number, and date of this specification.
(b) Class required (see 1.2.1).
(c) Capacity required (see 1.2.2).
(d) Preservation, packaging, packing and marking required, if other than specified in 5.1 (see 5.2).
(e) Mounting (deck or bulkhead).
(f) Size limitations (height, length and width).

6.3 Bid data. Bid data should include the drawings specified in 3.8.1.

Downloaded from http://www.everyspec.com

6.4 First article. When a first article inspection is required, the item should be a first article sample. The first article should consist of one unit. The contracting officer should include specific instructions in acquisition documents regarding arrangements for examinations, approval of first article test results and disposition of first articles. Invitations for bids should provide that the Government reserves the right to waive the requirement for samples for first article inspection to those bidders offering a product which has been previously acquired or tested by the Government, and that bidders offering such products, who wish to rely on such production or test, must furnish evidence with the bid that prior Government approval is presently appropriate for the pending contract.

6.5 Definitions. The following definitions are included to provide a common basis for dehydrator design and to insure that the requirements specified herein are interpreted properly:

(a) Dew point. The temperature at which a vapor begins to deposit as a liquid or frost below 32°F.
(b) Cycle. The time allowed for a desiccant bed to be in dehydrating service, reactivated, and returned to dehydrating service.
(c) Dehydration period. The portion of a cycle during which the desiccant bed performs the dehydrating function.
(d) Reactivation period. That portion of the cycle during which the adsorbed moisture is removed from the desiccant bed and the desiccant is returned to its original condition. The reactivation period includes the time required for depressurization, heating, cooling and repressurization of the desiccant tower.
(e) Heating period. That portion of the reactivation period during which heat is introduced into the desiccant bed.
(f) Cooling period. That portion of the reactivation cycle during which heat previously introduced is removed.
(g) Stand-by period. That portion of the reactivation period when the cooling period has ended and the dehydration tower is ready to be pressurized and placed on dehydrating service.
(h) Saturated air. Air which, at a given pressure and temperature, contains as much moisture as it can retain in the presence of an excess of moisture.
(i) Semi-automatic dehydrator. A machine requiring operator attention to switch towers and start the reactivation period. The reactivation period is terminated automatically.

6.6 Sub-contracted material and parts. The packaging requirements of referenced documents listed in section 2 do not apply when materials and parts are acquired by the contractor for incorporation into the equipment and lose their separate identity when the equipment is shipped.

Downloaded from http://www.everyspec.com

6.7 Subject term (key word) listing.

Adsorption
Contaminants
Dehydration
Purification

6.8 Changes from previous issue. Asterisks are not used in this revision to identify changes with respect to the previous issue due to the extensiveness of the changes.

Preparing activity:
Navy - SH
(Project 4460-N039)

Downloaded from http://www.everyspec.com

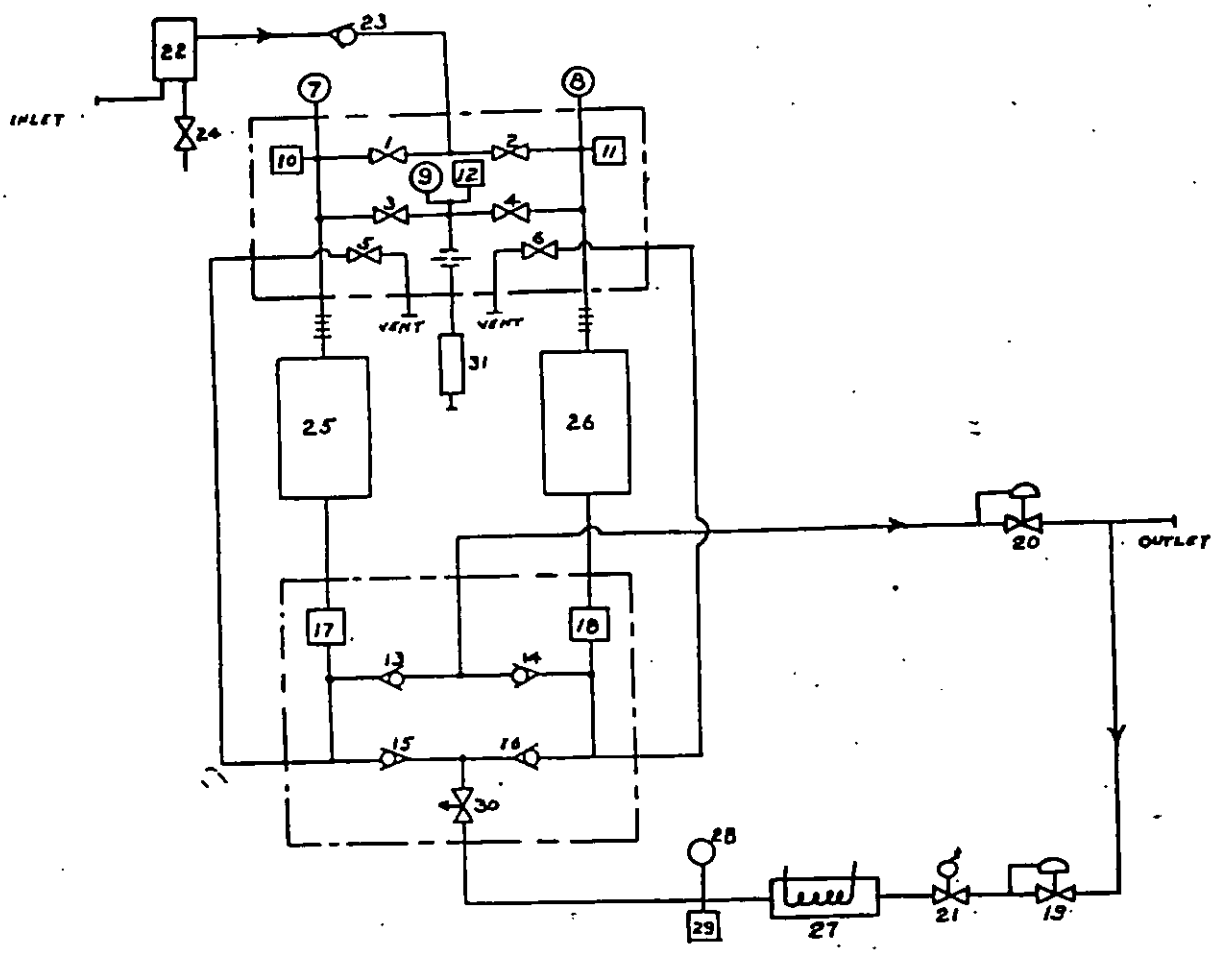

FIGURE 1. Flow diagram.

Downloaded from http://www.everyspec.com

Component identification

Item number	Description
1	Left tower flow selector valve
2	Right tower flow selector valve
3	Left tower reactivating air exhaust valve
4	Right tower reactivating air exhaust valve
5	Left tower depressurization valve
6	Right tower depressurization valve
7	Left tower pressure gauge
8	Right tower pressure gauge
9	Reactivation air pressure gauge
10	Number 1 pressure switch
11	Number 2 pressure switch
12	Number 3 pressure switch
13, 14, 15, and 16	Check valve
17, 18	After filters
19	Reactivating air reducing valve
20	Back pressure regulating valve
21	Reactivating air solenoid stop valve
22	Pre-filter
23	Inlet check valve
24	Pre-filter drain valve
25	Left dehydration tower
26	Right dehydration tower
27	Reactivating air heater
28	Reactivating air temperature gauge
29	Reactivating air high temperature switch
30	Reactivating air flow control valve
31	Muffler

FIGURE 1. Flow diagram. - Continued

Downloaded from http://www.everyspec.com

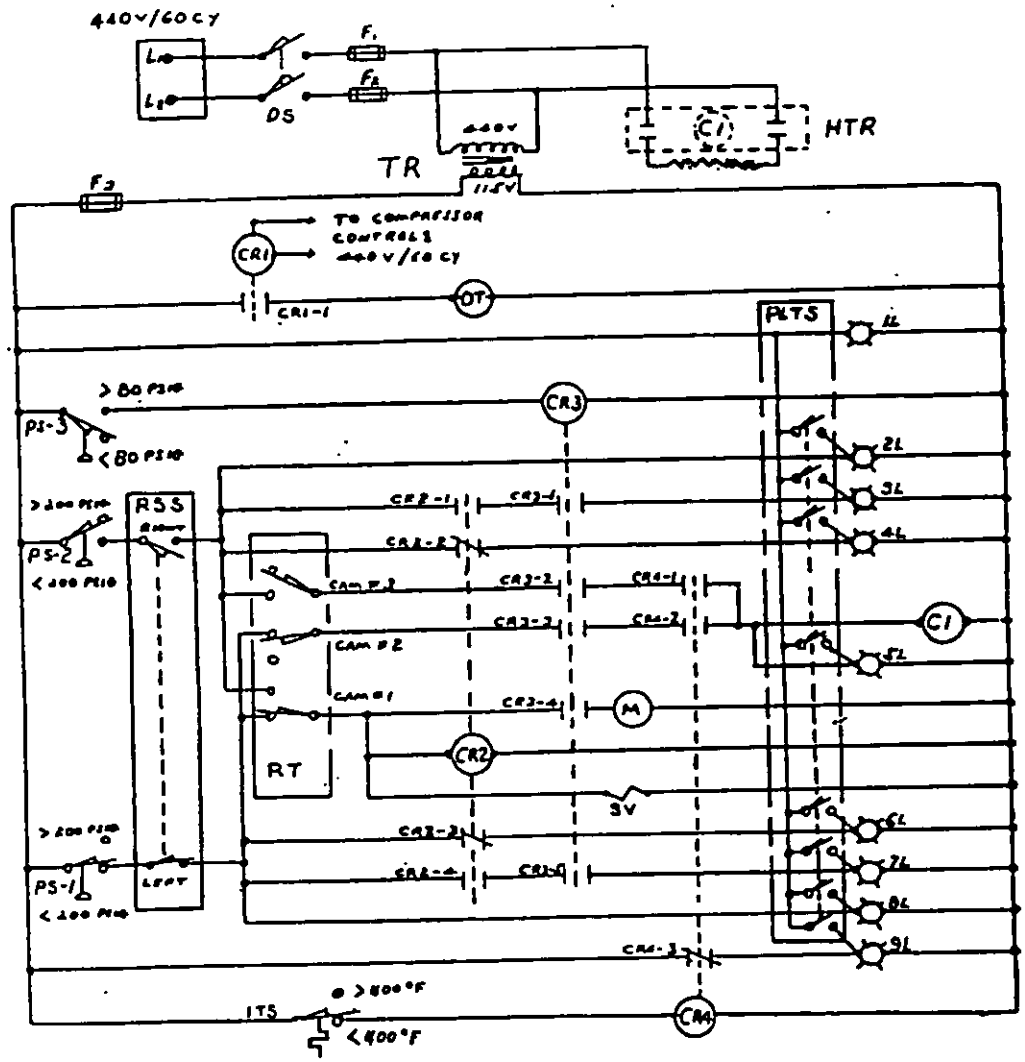

FIGURE 2. Electrical control schematic.

Notes to figure 2:

1. Schematic diagram shown with left tower depressurized and right tower dehydrating.
2. Timer is at the zero degree rotation position.
3. All the control relays are shown with the contacts in their normal de-energized positions.
4. Set points shown for pressure and temperature switches are representative only.

Downloaded from http://www.everyspec.com

LEGEND

DT - Dehydration timer
RT - Reactivation timer
C1 - Power relay
CR - Control relay
DS - Disconnect switch
F - Fuse
HTR - Heater
M - Reactivation timer motor
ITS - Indicating temperature switch
PS - Pressure switch
PLTS - Pilots light test switch
RSS - Reactivation selector switch
SV - Solenoid valve
TR - Transformer

PILOT LIGHTS

1L - Power on
2L - Left tower dehydration
3L - Right tower reactivating
4L - Right tower stand-by
5L - Heater on
6L - Left tower stand-by
7L - Left tower reactivating
8L - Right tower dehydration
9L - Heater temperature high

FIGURE 2. Electrical control schematic. - Continued

Downloaded from http://www.everyspec.com

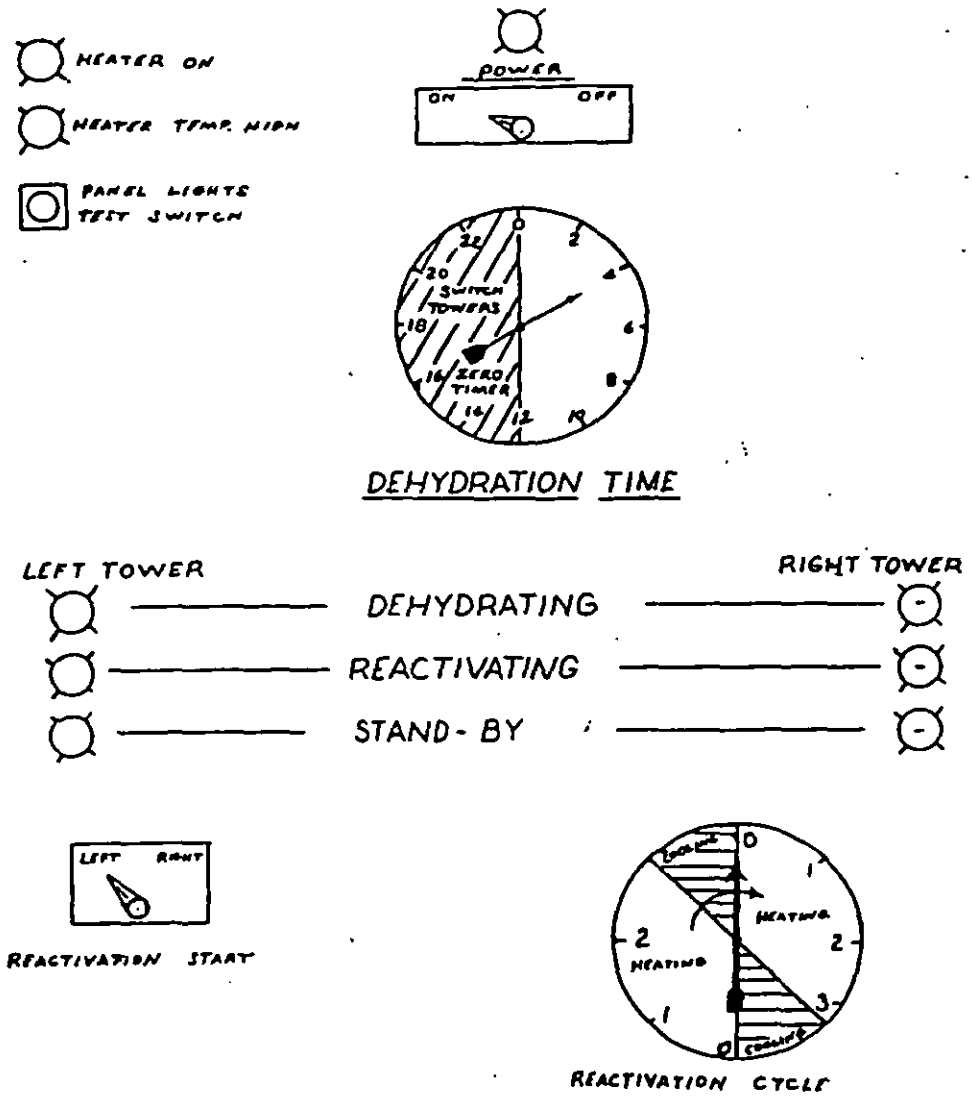

FIGURE 3. Dehydrator flow schematic.