INCH-POUND

MIL-C-87261 (USAF)
11 February 1992

MILITARY SPECIFICATION

CLOTH, LAMINATED, POLYBENZIMIDAZOLE/ARAMID SUBSTRATE, ACTIVATED CARBON SPHERE, FIRE RESISTANT AND CHEMICAL PROTECTIVE

This specification is approved for use by all Departments and Agencies of the Department of Defense

1. SCOPE. This specification covers the requirements for chemical protective and flame resistant fabric with activated carbon spheres laminated between polybenzimidazole/aramid blended woven outer layer cloth and knit inner layer cloth

2. APPLICABLE DOCUMENTS

2.1 Government documents

2.1.1 Specifications and standards. Unless otherwise specified (see 6.2), the following specifications and standards of the issue listed in that issue of the Department of Defense Index of Specifications and Standards (DoDISS) specified in the solicitation, form a part of this specification to the extent specified herein

Beneficial comments (recommendations, additions, deletions) and any pertinent data which may be of use in improving this document should be addressed to ASD/ENES, Wright-Patterson AFB OH 45433-6503 by using the self-addressed Standardization Document Improvement Proposal (DD Form 1426) appearing at the end of this document or by letter.

AMSC N/A FSC 8305

SPECIFICATIONS

FEDERAL

PPP-P-1136 – Packaging of Coated (Plastic, Rubber) and Laminated Fabrics

MILITARY

MIL-C-87262 – Cloth, Plain Weave, Polybenzimidazole/Aramid Blend
MIL-C-87263 – Cloth, Knit, Jersey, Polybenzimidazole/Aramid Blend
MIL-T-44100 – Thread, Para-Aramid, Spun, Intermediate Modulus

STANDARDS

FEDERAL

FED-STD-4 – Glossary of Fabric Imperfections
FED-STD-191 – Textile Test Methods
FED-STD-595 – Colors Used in Government Procurement

MILITARY

MIL-STD-105 – Sampling Procedures and Tables for Inspection by Attributes

(Copies of specifications, standards, drawings and publications required by suppliers in connection with specific procurement functions should be obtained form the procuring activity or as directed by the contracting officer)

2.1.2 Other Government documents, drawings, and publications. The following other Government documents form a part of this specification to the extent specified herein.

Rules and Regulations Under the Textile Fiber Products Identification Act

(Copies may be obtained without charge from the Federal Trade Commission, Washington D.C. 20580)

CRDC-SP-84010 – Laboratory Methods for Evaluating Protective Clothing Systems Against Chemical Agents

(Application for copies should be addressed to the Commander, Chemical Research and Development Center, ATTN· DRSMC-CLJ-IR (A), Aberdeen Proving Ground, Maryland 21010.)

2.1.3 Other publications. The following documents, of the issue in effect on date of invitation for bids or request for proposal, forms a part of this specification to the extent specified herein

Technical Manual of the American Association of Textile Chemists and Colorists

Method Number 135-1987 – Dimensional Changes in Automatic Home Laundering of Durable Press Woven or Knit Fabric

(Applications for copies of the AATCC Manual should be addressed to the AATCC National Headquarters, P.O. Box 12215, Research Triangle Park, North Carolina 27709)

Annual Book of ASTM Standards. Volume 15.01 – Refractories, Carbon and Graphite Products, Activated Carbon

Designation C 819–77	–	Special Surface Area of Carbon or Graphite (BET Method)
Designation D 2854–83	–	Apparent Density of Activated Carbon
Designation D 2862–82	–	Particle Size Distribution of Granular Activated Carbon
Designation D 4607–86	–	Determination of Iodine Number of Activated Carbon

(Applications for copies of the ASTM Annual Book of ASTM Standards: Volume 15.01 should be addressed to. ASTM, 1916 Race Street, Philadelphia, PA 19103–1187)

2.2 Order of precedence. In the event of a conflict between the text of this specification and the references cited herein, the text of this specification shall take precedence

3. REQUIREMENTS

3.1 Standard sample. The laminated fabric shall match the standard sample for shade and shall be equal to or better than the standard sample with respect to all characteristics for which the standard sample is referenced (see 6.3). (As referenced in FED–STD–595.)

3.2 First article. This specification contains provisions for first article inspection and approval (see 4.2 and 6.2)

3.3 Material

3.3.1 Outer layer cloth. The flame resistant, woven outer layer cloth of the laminated fabric shall conform to the requirements of MIL–C–87262.

3.3.2 Inner layer cloth. The flame resistant, circular knit jersey inner layer cloth of the laminated fabric shall conform to the requirements of MIL–C–87263.

3.3.3 Activated carbon. The activated carbon spherical sorbent shall be treated to render the activated carbon water insensitive The activated carbon spheres shall meet the physical and chemical requirements as specified in table I when tested as specified in 4 7

3.3.4 Laminated fabric. The activated carbon spheres shall be applied with continuous, uniform distribution to one side of the outer layer cloth with a suitable adhesive The inner layer cloth shall then be bonded to the exposed activated carbon spheres with a suitable adhesive

TABLE I Activated carbon requirements.

Characteristic	Requirements
Type Spherical	
Size	
Diameter range (mm)	0 1 – 0 45
Average diameter (minimum)	0.35 mm
Surface area, single point Brunaver–Emmett–Teller (BET) (minimum)	
before detergent exposure	900 m^2/gm
after detergent exposure	800 m^2/gm
Active surface, iodine number (minimum)	
before detergent exposure	900 mg/gm
after detergent exposure	800 mg/gm
Carbon tetrachloride sorption	
before detergent exposure	150 mg/gm
after detergent exposure	100 mg/gm

3.4 Physical requirements. The physical requirements of the finished fabric shall be as specified in table II when tested as specified in 4.7.

3.5 Width. Unless otherwise specified (see 6 2), the width shall be 56 inches inclusive of selvages

3.6 Carbon tetrachloride sorption. The laminated fabric shall absorb 2 5 mg/cm^2 (minimum) of carbon tetrachloride both before and after ten (10) launderings when tested as specified in 4 7.1.1

TABLE II. Physical requirements.

Characteristics	Requirements
Weight (ounces/square yard) (maximum)	13.5
Thickness (inches) (maximum)	0.050
Flex Stiffness (mg – cm) (maximum)	
Warp	8,000
Filling	2,500
Breaking Strength (pounds) (minimum)	
Warp	160
Filling	100
Seam efficiency (percent) (minimum)	
Warp	70
Filling	70
Tearing strength (pounds) (minimum)	
Warp	6
Filling	4
Adhesion Strength (ounces/inch) (minimum)	
Before laundering	
Warp	30
Filling	20
After laundering	
Warp	24
Filling	16
Air permeability (feet3/minute/feet2 at 1/2-inch water pressure) (minimum)	42
Flame resistance	
(FSTM-191-5903)	
Flaming time (seconds)(maximum)	8
Glow time (seconds)(maximum)	10
Char length (inches)(maximum)(average)	2
(FSTM-191-5905)	
First burn flaming time (seconds)(maximum)	10
Second burn flaming time (seconds)(maximum)	10
Percent consumed (maximum)(average)	20

3.7 Chemical agent protection. The laminated fabric shall provide chemical agent protection against the agent concentration levels and exposure times given in table III after ten (10) launderings when tested as specified in 4 7 2 2

TABLE III Chemical agent protection requirements

Test	Agent	Agent Concentration (minimum)	Exposure Time (minimum)	Breakthrough Criteria
Vapor Agent Contamination/ Vapor Penetration	HD	20 ug/l	24 hours	4 ug/cm^2
Liquid Agent Contamination/ Vapor Permeation	HD	2 g/m^2	6 hours	4 ug/cm^2

3.8 Dimensional stability. The laminated fabric shall not shrink more than 4 5 percent in the direction of the warp nor more than 2 5 percent in the direction of the filling, after five launderings when tested as specified in 4.7

3.9 Laundering durability. The laminated fabric shall not separate nor shall the outer layer fabric pucker after ten (10) launderings when tested as specified in 4 7.

3.10 Length and put-up. Unless otherwise specified (see 6.2), the laminated fabric shall be furnished in continuous lengths each not less than 25 yards Each length shall be put-up in full width rolls as specified in PPP-P-1136

3.11 Labeling. An information label shall be securely attached to each roll from each lot of finished fabric The label shall identify day, month and year of manufacture and manufacturer's name

3.12 Workmanship. The finished cloth shall conform to the quality and grade of product established by this specification The occurrence of defects shall not exceed the point level specified

4. QUALITY ASSURANCE PROVISIONS

4.1 Responsibility for inspection. Unless otherwise specified in the contract or purchase order, the contractor is responsible for the performance of all inspection requirements (examinations and tests) as specified herein Except as otherwise specified in the contract or purchase order, the contractor may use his own or any other facilities suitable for the performance of the inspection requirements specified herein, unless disapproved by the Government The Government reserves the right to perform any of the inspections set forth in the specification where such inspections are deemed necessary to assure supplies and services conform to prescribed requirements

4.1.1 Responsibility for compliance. All items shall meet all requirements of sections 3 and 5. The inspection set forth in this specification shall become a part of the contractor's overall inspection system or quality program The absence of any inspection requirements in the specification shall not relieve the contractor of the responsibility of insuring that all products or supplies submitted to the Government for acceptance comply with all requirements of the contract. Sampling inspection, as part of manufacturing operations is an acceptable practice to ascertain compliance to requirements, however, this does not authorize submission of known defective material, either indicated or actual, nor does it commit the Government to accept defective material.

4.1.2 Certificate of compliance. Where certificates of compliance are submitted, the Government reserves the right to check test such items to determine the validity of the certification

4.2 Classification of inspections. The inspection requirements specified herein are classified as follows

a First article inspection (see 4.4)

b. Quality conformance inspection (see 4.5)

4.3 Inspection conditions. Unless otherwise specified, all inspections shall be performed in accordance with the test conditions specified in sections 4.4, 4 5 and 4.6 of this specification.

4.4 First article inspection. The first article inspection shall consist of specified examinations and tests performed on samples of chemical protective laminated cloth and activated carbon spheres to determine that the production item conforms to the requirements of this specification

4.4.1 First article samples. Unless otherwise specified, as soon as practical after the award of the contract or order, the manufacturer shall submit five linear yards of the chemical protective laminated cloth and 1.0 kilogram of the activated carbon spheres for subjection to the examinations and tests specified in 4.4.2 The samples shall be representative of the construction, workmanship, components and materials to be used during production

4.4.2 First article tests. The first article samples shall be subjected to tests specified in section 3 in accordance with methods specified in 4.7 of this specification.

4.5 Quality Conformance Inspection. Sampling for inspection shall be performed in accordance with MIL-STD-105, except where otherwise indicated hereinafter

4.5.1 Component and material inspection. In accordance with 4.1 above, components and materials shall be tested in accordance with all the requirements or referenced specifications, drawings, and standards, unless otherwise excluded, amended, modified or qualified in this specification or applicable purchase documents.

4.5.2 Examination of the end item. Examination of the end item shall be in accordance with the provisions of 4.5.2.1 through 4.5.2.2 2

4.5.2.1 Yard-by-yard examination. Each roll in the sample shall be examined on the outer layer (woven) and inner layer (knit) sides and visual defects as defined herein shall be classified as listed in table IV All defects found shall be counted regardless of their proximity one to another except where two or more defects represent a single local condition of the cloth, in which case only the more serious defect shall be counted. A continuous defect shall be counted as one sample unit for each lengthwise yard or fraction thereof in which it occurs The sample unit for this examination shall be one linear yard. The sample size shall be in accordance with Inspection Level II of MIL-STD-105. The Acceptable Quality Level (AQL) shall be 4.0 major defects and 10.0 minor defects per 100 units (yards) The total size shall be expressed in units of one linear yard An approximate equal number of yards shall be examined from each roll selected for yard by yard examination

TABLE IV. End item inspection. 1/

Defect	Classification: Major	Classification: Minor
Part A – Outer layer (woven cloth) side		
1. Any cut, tear, hole, mend or burn through laminated cloth over 1/4 inch long	X	
2 Any misweave, slub, smash, float, broken or missing yarn or thin place		X
3. Color not as specified, shade bar or dye streak		X
4 Area of delamination over 1-inch in diameter	X	
5 Spot or stain (grease, oil or ink)	X	
Part B – Inner layer (knit cloth) side		
1. Any cut, tear, or hole through liner		
– over 1-inch long	X	
– less than 1-inch long		X
2 Mends in liner over 2-inches long		X
3. Folds or creases in liner		X
4. Color not as specified		X
5 Foreign matter under liner	X	

1/ Clearly visible at normal inspection distance (3 feet)

NOTE As referenced in FED-STD-4

4.5.2.2 Examination for length

4.5.2.2.1 Individual rolls. During the yard-by-yard examination, each roll in the sample shall be examined for length. Any length found to be less than the minimum specified or more than two yards less than the length marked on the ticket shall be considered a defect with respect to length The lot shall be unacceptable if two or more rolls in the sample are defective in respect to length.

4.5.2.2.2 Total yardage in sample. The lot shall be unacceptable if the total of the actual lengths of rolls in the sample is less than the total of the lengths marked on the ticket

4.6 Examination of preparation for delivery requirements. An examination shall be made in accordance with the provisions of PPP-P-1136, to determine that packaging, packing, and marking complies with the section 5 requirements

4.7 Quality conformance tests

4.7.1 Testing of the activated carbon spheres. Compliance with activated carbon sphere requirements of table I shall be determined on activated carbon spheres as specified in 4.7.1.1 and table V. The physical and chemical values specified in section 3, except where otherwise specified, apply to the results of the determinations made on a sample unit for test purposes as specified in the applicable test method The sample unit shall be 500 grams of the activated carbon spheres All test reports shall contain the individual values utilized in expressing the final result. The lot size shall be expressed in units of 1 kilogram The lot shall be unacceptable if one or more units fail to meet any requirement specified The sample size (number of sample units) shall be as follows:

Lot size (kilograms)	Sample size
less than 5500	2
5501 and over	3

4.7.1.1 Carbon tetrachloride sorption

4.7.1.1.1 Apparatus and reagents

4.7.1.1.1.1 Nitrogen/carbon tetrachloride gas mixture. A mixture of 500 ± 50 parts per million carbon tetrachloride vapor and nitrogen gas shall be used to pass through the test cup containing the sample. The flow through the test cup shall be 250 ± 10 cc/min. The rate of flow shall be controlled with a digital flowmeter and rotometer Gas shall be pre-mixed by manufacturer (see 6 4)

4.7.1.1.1.2 Nitrogen gas. Pure nitrogen gas shall be used to purge apparatus lines Nitrogen gas shall be used for calibration of infrared detection device. The rate of nitrogen gas flow shall be controlled with a digital flowmeter and rotometer

4.7.1.1.1.3 Fabric/carbon sphere sample cup. The fabric/carbon sphere sample cup shall conform to the requirements shown in figure 1.

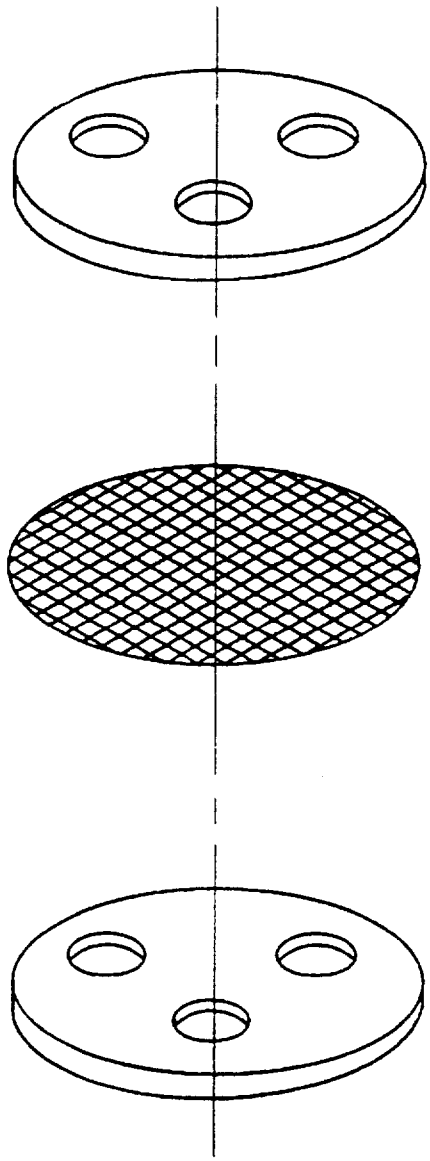

FIGURE 1. Carbon sphere sample holder.

TABLE V Activated carbon sphere test methods.

Characteristic	Requirement paragraph	Test method
Type	3.3.3	1/
Size	3.3.3	ASTM D 2862-82 2/
Surface area, single point BET area	3.3.3	ASTM C 819-77 3/
Active surface, iodine number	3.3.3	ASTM D 4607-86 3/
Carbon tetrachloride sorption	3.3.3	4.5.1 3/

1/ Unless otherwise specified, a certificate of compliance shall be submitted and will be acceptable for the stated requirements

2/ Carbon sphere size is calculated by multiplying the sieve opening size by the percentage of spheres remaining on the sieve. Values for each sieve are totaled for a we ighted average sphere size.

3/ For detergent exposure, soak 80 grams of carbon spheres for 60 minutes in a solution of 1.0 ounce AATCC #124 detergent with optical brightener per 2 0 liters water Detergent/carbon sphere dispersion shall be blended for 20 seconds in an industrial blender Solution containing carbon spheres shall be mechanically stirred and held at temperature of 60° C (140° F) throughout detergent soaking period. Carbon spheres shall be rinsed three (3) times for minimum 5 minutes each in distilled water at 38° C (100° F) with stirring. Prior to testing, carbon spheres shall be dried for minimum 3 hours at temperature of 60° C (140° F) in a convection oven.

4.7.1.1.1.4 Infrared Analyzer. The infrared analyzer shall continuously determine the amount in parts per million of carbon tetrachloride vapor passing through the sample Internal analyzer temperature shall be 44° C ± 5° C (110° F ± 10° F) The analyzer reference cell shall be configured for carbon tetrachloride measurement (see 6.6)

4.7.1.1.1.5 Gas line desiccators. In-line desiccators shall be used on nitrogen gas lines between source tank and fabric sample cup

4.7.1.1.1.6 Charter recorder. The chart recorder shall have a one (1.0) volt input The recorder shall be capable of one centimeter per minute chart speed

4.7.1.1.1.7 Vacuum oven. Vacuum oven shall be capable of continuously maintaining temperature of 120° C (250° F) with 69 KPa (10 psi) vacuum.

4.7.1.1.1.8 Convection oven. Convection oven shall be capable of continuously maintaining temperature of 120° C (250° F)

4.7.1.1.1.9 Desiccator

4.7.1.1.1.10 Analytical balance

4.7.1.1.1.11 Schwartz-type drying tube with stop-cocks. The tube shall be filled with activated charcoal, loosely packed, as shown in figure 2 Glass wool, loosely packed, shall be placed on top of the activated carbon The filled tubes shall be stored in a desiccator when not in use.

4.7.1.1.1.12 Charcoal, coconut, activated, 6 to 14 mesh

4.7.1.1.1.13 Particulate filter. A porous in-line particulate filter shall be placed on gas line between fabric sample cup and infrared analyzer

4.7.1.2 Determination of carbon tetrachloride concentration. Carbon tetrachloride concentration should be determined with each new tank of premixed nitrogen/carbon tetrachloride

4.7.1.2.1 Drying tube preparation. Prepare activated carbon filled Schwartz-type drying tube (see figure 2) by removing stopcocks and placing stopcocks and tube in vacuum oven for 6 hours at 105° C (220° F) and 69 KPa (10 psi). After removal from vacuum oven replace stopcocks and place sealed tube in desiccator for one hour

4.7.1.2.2 Tare weight of drying tube. Weigh sealed tube to the nearest milligram Handle tube with cloth gloves

4.7.1.2.3 Determination of carbon tetrachloride concentration. Start nitrogen/carbon tetrachloride gas flow through analyzer system at a 250 cc/minute rate Allow flow to stabilize for 10 minutes Connect nitrogen/ carbon tetrachloride inlet hose from fabric/carbon sphere sample cup to Schwartz tube Open stopcocks on tube and allow the gas to flow through the activated carbon for 45 minutes Close stopcocks and disconnect Schwartz-type tube drying tube Weigh the tube to the nearest milligram

4.7.1.2.4 Calculation. The carbon tetrachloride (CCl_4) concentration (parts per million) is determined by first dividing the weight pickup of the Schwartz-type tube (mg) by the sampling time (min) and flow rate (liter/min), resulting in concentration in terms of milligrams/liter. This value is then converted to terms of parts per million by determining its equivalent mole weight (millimoles/liter), dividing by mole weight of one liter of nitrogen (millimoles/liter), and multiplying by 1 million. An example of the calculation follows:

Given 1 mole of carbon tetrachloride weighs 154 grams
44 6 millimoles nitrogen has volume of 1 0 liter (at standard conditions)

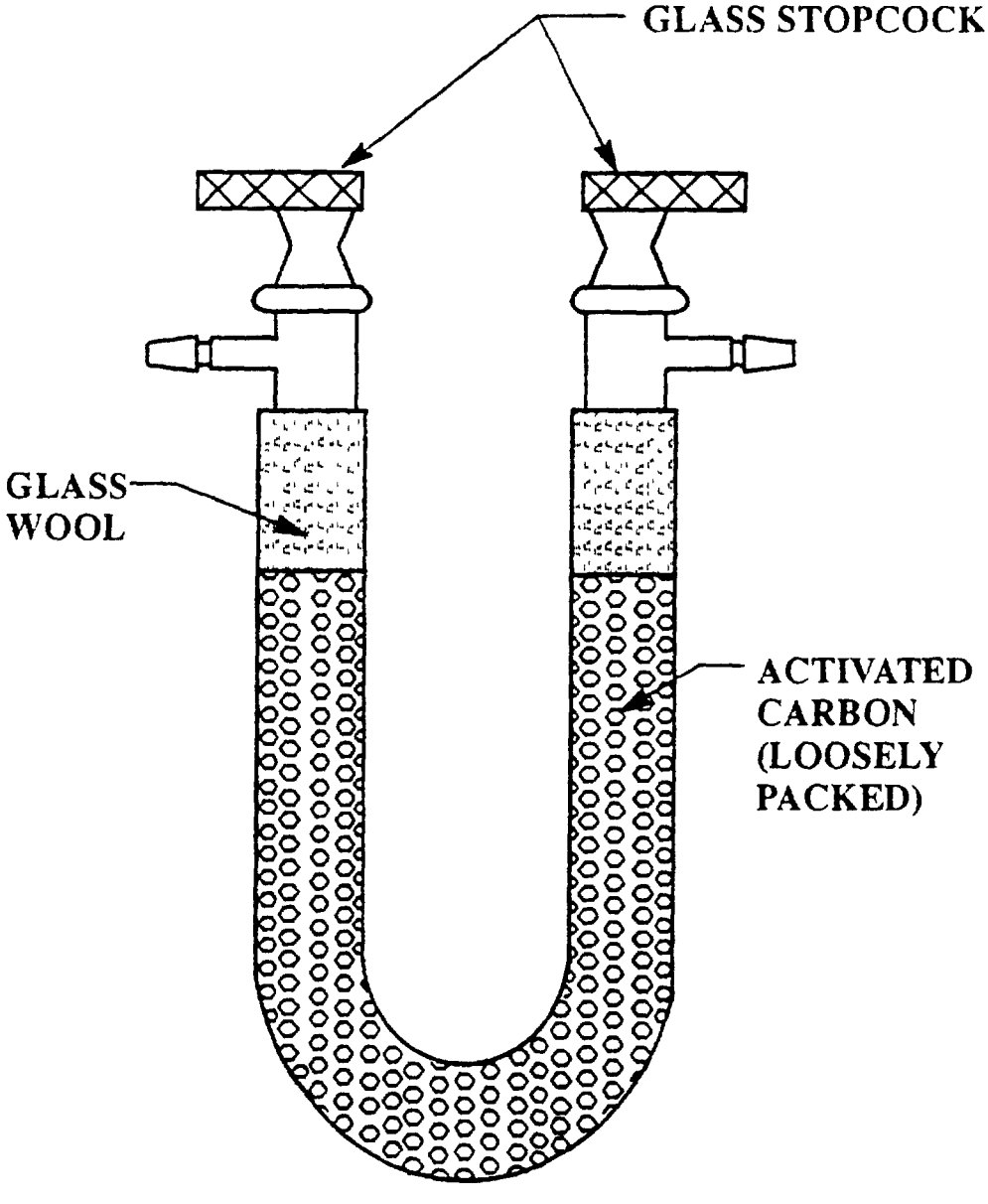

FIGURE 2 Schwartz type drying tube

a Determine milligrams per liter CCl_4 adsorbed

$$\frac{CCl_4 \text{ adsorbed (mg)}}{\text{time(min)} \times \text{flow rate(l/min)}} = CCl_4 \text{ adsorbed (mg/l)}$$

b. Determine the amount of CCl_4 per volume of gas

$$\frac{\text{Concentration } CCl_4 \text{ (mg/l)}}{154\ CCl_4 \text{ mg/millimole}} = \text{concentration } CCl_4 \text{ (millimoles/l)}$$

c Determine parts per million of CCl_4

$$\frac{\text{Concentration } CCl_4 \text{ (millimoles/l)}}{44.6 \text{ nitrogen (millimoles/l)}} \times 1{,}000{,}000 = \text{carbon tetrachloride (parts per million)}$$

4.7.1.3 Test atmospheric conditions. Test apparatus shall be installed in an area with temperature of 21° C ± 1° C (70° F ± 2° F) and relative humidity of 65% ± 2%.

4.7.1.4 Calibration of sorption apparatus. Turn on nitrogen gas cylinder to initiate flow through sorption test apparatus Digital flow-meter shall read within required flow rate. Turn on recorder and chart drive Set chart input on 1 volt and chart speed of one centimeter per minute Stabilize chart recorder by running for five minutes, then adjust pen to zero. Adjust analyzer scale to read zero Turn off nitrogen gas cylinder and allow lines to bleed When no flow is indicated on flowmeter, initiate nitrogen/carbon tetrachloride gas flow through sorption test apparatus. Digital flow-meter shall read within required flow rate. Allow system to stabilize for several minutes. Recorder and analyzer should read 500 parts per million or the predetermined concentration of the gas mixture Turn off nitrogen/carbon tetrachloride gas and purge lines with nitrogen gas. Recorder and analyzer should return to zero If recorder and analyzer do not return to zero, infrared cell realignment may be required. Complete calibration by turning off nitrogen gas cylinder and allowing lines to bleed When no flow is indicated on flowmeter, initiate nitrogen/carbon tetrachloride gas flow through sorption test apparatus. Sorption test apparatus shall be calibrated daily prior to sample testing

4.7.1.5 Test specimen preparation

4.7.1.5.1 Fabric test specimen. The fabric test specimen shall be a 6.8 ± 0.1 cm (2-11/16 ± 1/16 inches) diameter piece of laundered or unlaundered finished fabric For each 1 yard sample cut 1 specimen from the left side, 1 specimen from the right side, and 1 specimen from the center of the sample Condition samples in desiccator at least one hour prior to testing Each specimen shall be tested. Diameter of sample exposed to nitrogen/carbon tetrachloride gas mixture shall be 5.1 ± 0.1 cm (2 0 ± 1/16 inches)

4.7.1.5.2 Carbon sphere test specimen. The carbon sphere test specimen shall be 0 6 grams of fresh or detergent exposed activated carbon spheres Carbon spheres shall be spread into holes on holder as shown in figure 3 Condition carbon spheres in desiccator at least one hour prior to testing Three carbon sphere samples shall be tested and averaged for each data point

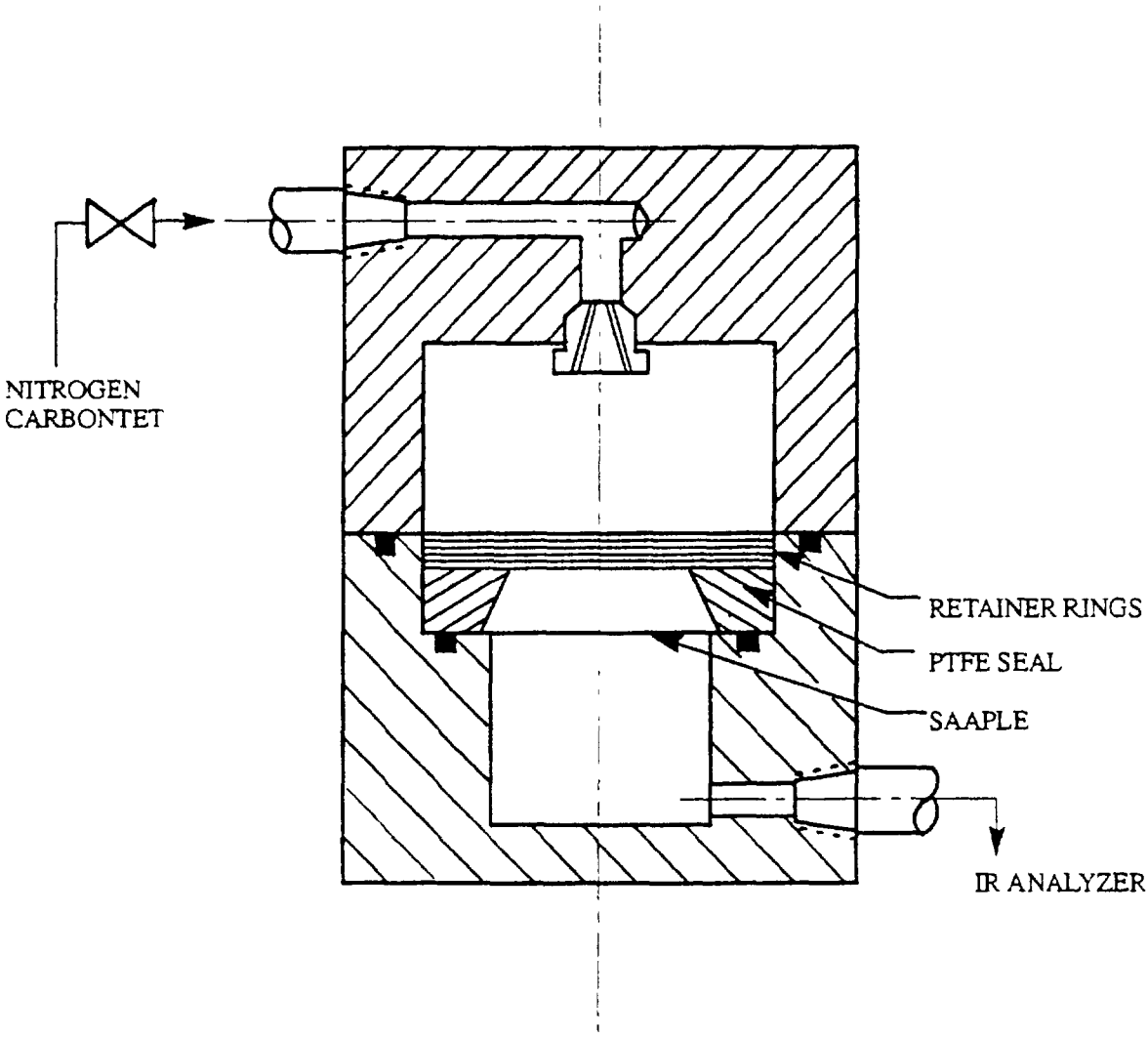

FIGURE 3. Fabric/carbon sphere sample cup

4.7.1.6 Procedure. Assemble the complete apparatus as shown in figure 4. After apparatus calibration mount one carbon sphere filled holder or fabric sample, liner side down, in the lower portion of the test cup. The upper side of the cup is the inlet side in respect to carbon tetrachloride flow Place sample over o-ring and place PTFE seal and retainer rings over fabric sample or holder Lock sample or holder securely in position to prevent leaks Replace bottom of test cell and tighten. Nitrogen/carbon tetrachloride mixture should be flowing through top portion of test cup during sample mounting. Recorder/analyzer indicators shall drop to within 100 ppm from zero, otherwise the test shall be discontinued and the sample failed As the test progresses and sample sorptive capacity is exceeded CCl4 level indicated by analyzer and recorder will slowly rise. When change in concentration of CCl4 from the low point reaches 35 ppm, failure or breakthrough has occurred Determine time to breakthrough by counting time interval from insertion of test specimen to a 35 part per million recovery from low point After breakthrough remove sample from test cell. Allow analyzer to stabilize at the calibrated carbon tetrachloride concentration before inserting another sample

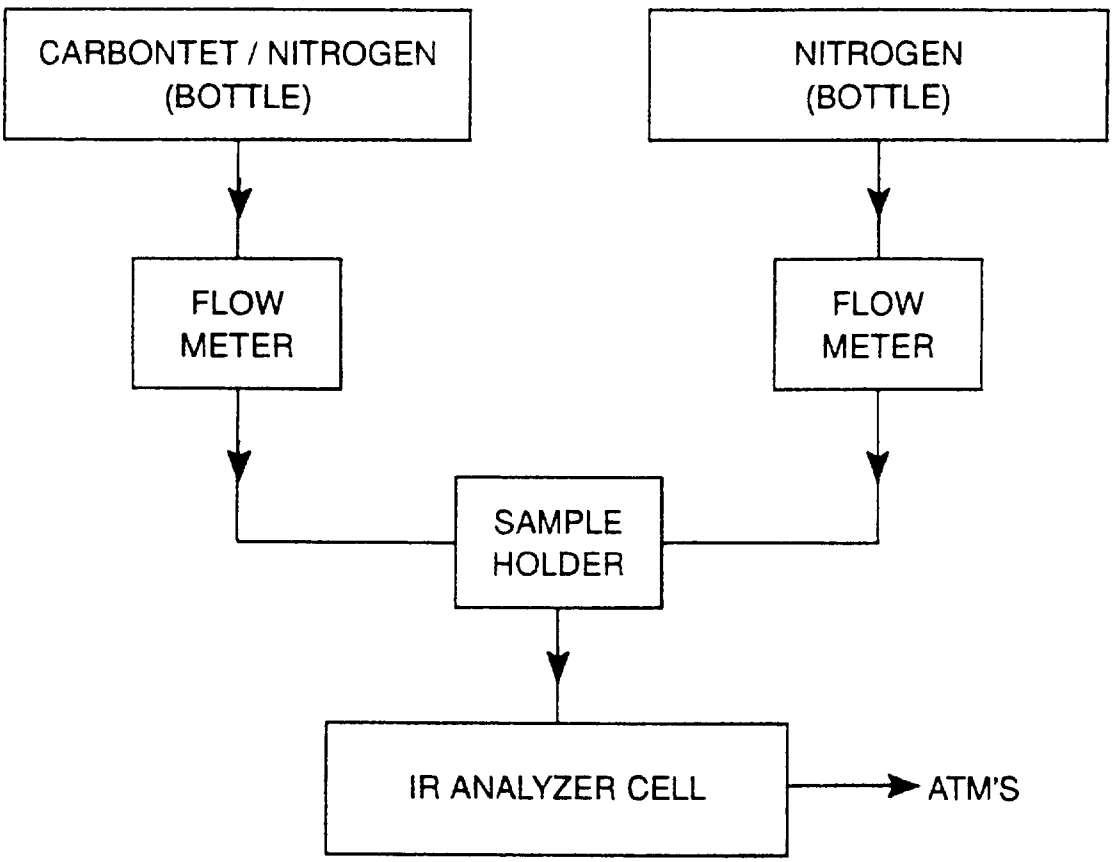

FIGURE 4 Flow diagram CCl_4 test device

4.7.1.7 Calculation. The carbon tetrachloride sorption shall be calculated as follows

a Fabric samples

$$mg/cm^2 = \frac{T \times C}{A} \times F$$

Where: T = breakthrough time (minutes)
C = concentration of carbon tetrachloride (mg/liter)
A = area of test specimen (20.3 sq cm)
F = flow rate (liter/minute)

b Carbon sphere samples

$$mg/g = \frac{T \times C}{M} \times F$$

Where T = breakthrough time (minutes)
C = concentration of carbon tetrachloride (mg/liter)
M = mass of test specimen (gm)
F = flow rate (liter/minute)

4.7.2 Testing of the end item

4.7.2.1 Physical and chemical property testing. Compliance with physical and chemical property requirements of section 3 shall be determined on chemical protective laminated fabric as specified in table VI The physical and chemical values specified in section 3, except where otherwise specified, apply to the results of the determinations made on a sample unit for test purposes as specified in the applicable test method. The sample unit shall be 3 continuous yards (2 75 meters), full width, of the finished cloth. All test reports shall contain the individual values utilized in expressing the final result The lot size shall be expressed in units of a linear yard The lot shall be unacceptable if one or more units fail to meet any requirement specified The sample size (number of sample units) shall be as follows:

Lot size (yards)	Sample size
800 or less	2
801 thru 22,000	3
22,001 and over	5

TABLE VI. End item test methods

Characteristic	Requirement paragraph	FED-STD-191 Test method
Weight	3 4	5041 1/
Thickness	3 4	5030
Breaking Strength		
Warp	3 4	5100
Filling	3 4	5100
Tearing Strength		
Warp	3 4	5132
Filling	3.4	5132
Air permeability	3 4	5450
Cantilever stiffness	3.4	5206 2/
Adhesion strength	3 4	5951 3/ 4/ 5/
Flame resistance	3 4	5903 & 5905 6/
Carbon tetrachloride sorption	3 6	4 7.1.1 3/ 4/ 5/
Dimensional stability		
After five launderings	3.7	3/
Seam efficiency	3.8	5110 7/
Laundering durability	3.9	3/ 4/ 5/ 8/

1/ Samples shall be bone dried for 2 hours in circulating oven at 220° F (105° C) Sample shall be cooled in desiccator for 30 minutes and immediately weighed

2/ Chemical protective laminated fabric shall be tested liner side up

3/ AATCC 135–1987 version – delicate wash cycle, 41 ± 3° C (105 ± 5° F) water temperature, 15 grams AATCC standard detergent #124 with optical brightener and permanent press tumble dry procedure

4/ Samples shall be laundered ten (10) times

5/ Washed samples shall be full width of laminated fabric and 1/2 yard in length Five samples shall be placed in each washer load

6/ Chemical protective laminated fabric char length and percent consumed shall be measured on the side of the fabric (shell or liner) with the largest charred area.

7/ The needle shall be ball point, size 20, classified 125 at the blade The thread shall be T35, 30/2 para aramid conforming to MIL-T-44100.

8/ Unless otherwise specified, a certificate of compliance shall be submitted and will be acceptable for the stated requirements

4.7.2.2 Chemical agent protection testing. Compliance with chemical agent protection requirements of table III shall be determined on chemical protective laminated fabric as specified in table VII The chemical values specified in section 3, except where otherwise specified, apply to the results of the determinations made on a sample unit for test purposes as specified in the applicable test method The sample unit shall be 2 continuous yards (1.8 meters), full width, of the finished cloth. Sample shall be submitted only to government approved laboratories (see 6 7) for testing. The lot size shall be expressed in units of 1 yard The lot shall be unacceptable if one or more units fail to meet any requirement specified. The sample size (number of sample units) shall be as follows

Lot size (yards)	Sample size
8,000 or less	1
8,001 thru 50,000	2
50,001 and over	3

TABLE VII. Chemical agent protection test methods.

Test	Agent	Test Method	Reference
Vapor Agent Contamination/ Vapor Penetration	HD	2.1	CRDC-SP-84010 1/
Liquid Agent Contamination/ Vapor Penetration	HD	2.2	CRDC-SP-84010 1/

1/ AATCC 135-1987 version – delicate wash cycle, 41 ± 3° C (105 ± 5° F) water temperature, 15 grams AATCC standard detergent 124 with optical brightener and permanent press tumble dry procedure. Samples shall be laundered ten (10) times. Three samples shall be placed in each washer load.

5. PACKAGING

5.1 Put-up. Put-up shall be level A or C as specified (see 6.2).

5.1.1 Levels A and C. The cloth shall be put-up in accordance with the applicable requirements of PPP-P-1136.

5.2 Packaging. Packaging shall be level A or C as specified (see 6.2)

5.2.1 Levels A and C. The cloth shall be packaged in accordance with the applicable requirements of PPP-P-1136

5.3 Marking. In addition to any special marking required by the contract or order, shipments shall be marked in accordance with PPP-P-1136.

6. NOTES

6.1 Intended use. The cloth covered by this specification is intended for use in the fabrication of chemical protective flight, shipboard and ground combat clothing.

6.2 Ordering data. Procurement documents should specify the following

a Title number and date of this specification

b First article (see 3.2 and 4.2).

c Width of cloth required when other than specified (see 3.5)

d. Length required if other than specified (see 3.10)

e Selection of applicable levels of packaging and packing (see 5 1, 5.2 and 5.3).

6.3 Standard sample. For access to standard sample, address the procuring office issuing the invitation for bids (see 3.1)

6.4 Toxicity. Due to the toxicity of carbon tetrachloride, the effluent must be vented into a hood (see 4.7.1.1).

6.5 Warning. During the manufacturing process. the chemical protective laminated fabric should be protected from exposure to chemical vapors, such as solvents, to prevent contamination of the activated carbon.

6.6 Infrared analyzer. Suitable infrared analyzer for this test is Beckman Instruments, Inc. – Model 865 or 880 (see 4.7 1.1 4). A mass spectrophotometer may also be used

6.7 Chemical agent protection. A list of government approved laboratories for chemical agent testing is available from Commander, Chemical Research and Development Center, ATTN: SMCCR-CMC, Aberdeen Proving Ground, Maryland 21010 (see 4.7.2.2).

6.8 Subject term (key word) listing

Activated carbon sphere
Aramid substrate
Carbon tetrachloride
Chemical agent protection
Cloth
Detergen exposure
Flame resistant
Laminated fabric
Launderings
Material
Nitrogen gas
Polybenzimidazole
Shrink

Custodian:
Air Force – 11

Review Activity.
DLA – CT

User
Air Force – 45

Preparing Activity.
Air Force – 11

Project No 8305-F452

STANDARDIZATION DOCUMENT IMPROVEMENT PROPOSAL

INSTRUCTIONS

1 The preparing activity must complete blocks 1, 2, 3, and 8 In block 1, both the document number and revision letter should be given

2 The submitter of this form must complete blocks 4, 5, 6, and 7

3 The preparing activity must provide a reply within 30 days from receipt of the form

NOTE This form may not be used to request copies of documents, not to request waivers, or clarification of requirements on current contracts Comments submitted on this form do not constitute or imply authorization to waive any portion of the referenced document(s) or to amend contractural requirements

I RECOMMEND A CHANGE:	1 DOCUMENT NUMBER MIL-C-87261 (USAF)	2 DOCUMENT DATE (YYMMDD) 920211

3 DOCUMENT TITLE
Cloth, Laminated, Polybenzimidazole/Aramid Substrate, Activated Carbon Sphere, Fire Resistant and Chemical Protective

4 NATURE OF CHANGE *(Identify paragraph number and include proposed rewrite, if possible Attach extra sheets as needed)*

5 REASON FOR RECOMMENDATION

6. SUBMITTER

a. NAME *(Last, First, Middle Initial)*	b. ORGANIZATION	
c. ADDRESS *(Include Zip Code)*	d. TELEPHONE *(Include Area Code)* (1) Commercial (2) AUTOVON *(If applicable)*	7 DATE SUBMITTED *(YYMMDD)*

8 PREPARING ACTIVITY

A NAME AF CODE 11	B TELEPHONE *(Include Area Code)* (1) Commercial (513) 255-6281 (2) AUTOVON *(If applicable)* DSN 785-6281
C ADDRESS *(Include Zip Code)* ASD/ENES WRIGHT-PATTERSON AFB OH 45433-6503	IF YOU DO NOT RECEIVE A REPLY WITHIN 45 DAYS, CONTACT Defense Quality and Standardization Office 5203 Leesburg Pike, Suite 1403 Falls Church VA 22041-3466 Telephone (703) 756-2340 AUTOVON 289-2340