Downloaded from http://www.everyspec.com



MILITARY SPECIFICATION SHEET

CONNECTOR, ELECTRICAL, MOUNTING DEVICE, FLANGE TYPE,
3/4 MOUNTING PERIMETER DEVICE, TYPE II (MEDIUM DUTY)

This specification is approved for use by all Departments and Agencies of the Department of Defense.

The complete requirements for acquiring the mounting flanges described herein shall consist of this document and the latest issue of specification MIL-C-85528.

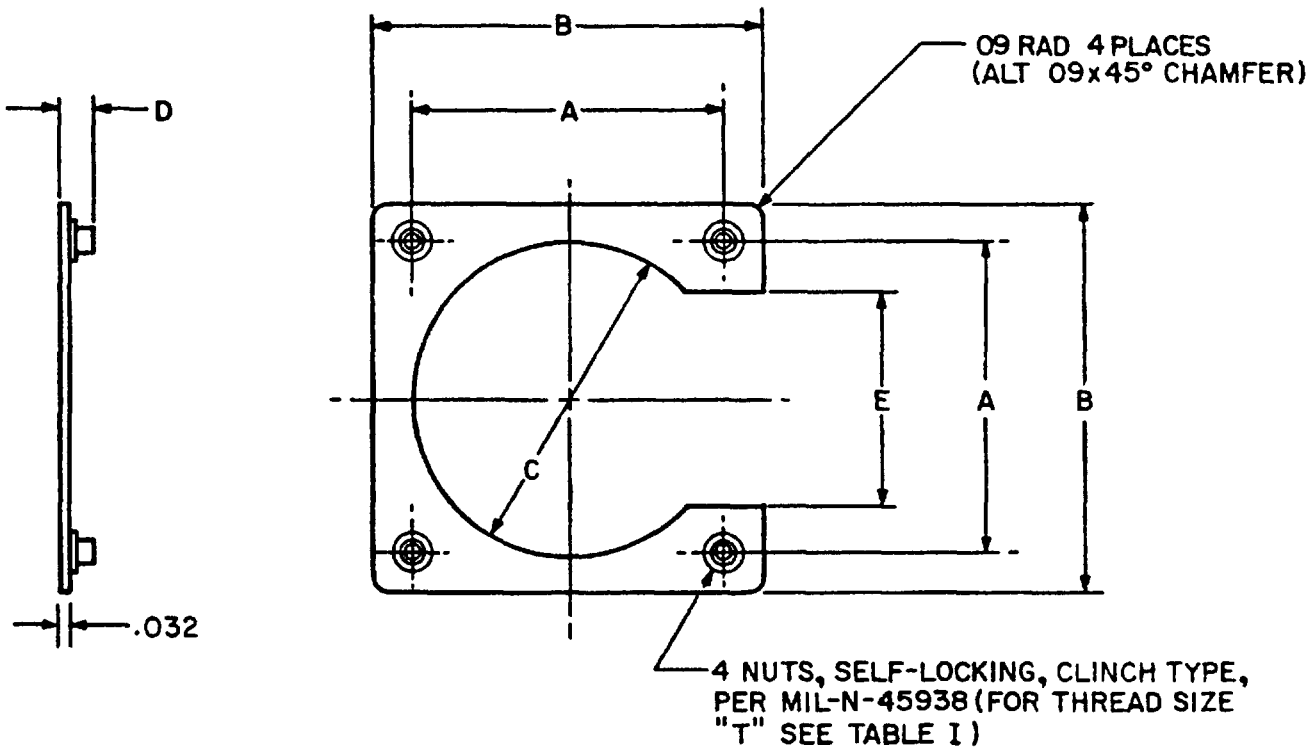


NOTES:
1. Dimensions are in inches.
2. Metric equivalents are given for general information only.
3. Unless otherwise specified, tolerance is ±.010.
4. Classes represents shell size variances (see Table I).
5. Cross referencing-applications (see Tables II and III).

FIGURE 1. Mounting flange, Type II.



FSC 5935

Downloaded from http://www.everyspec.com



REQUIREMENTS:

Physical:

Material:

Mounting flanges - Aluminum alloy .040 thk, 2024-T3 per QQ-A-250/4 and .040 thk, 6061-T6 per QQ-A-250/11

Nut, self-locking, clinch type - Alloy steel per MIL-N-45938; if a corrosion resistant steel is required (use AISI 303 per FED-STD-66 or A286 per AMS 5734). Add -01 to Part No. (see example).

Finish:

Mounting flanges - Alodine per MIL-C-5541. Epoxy polyamide primer, 2 coats applied per MIL-P-23377, if required (see example).

Nut, self-locking, clinch type - Cadmium plate per QQ-P-416, Type II, Class 3, supplementary molybdenum disulfide coating.

MILITARY PART NUMBER:

Example: M85528/2-8-A-01-A

- A — Letter designation "A" indicates primer coat is required. Omission of letter indicates primer coat not required.
- 01 — Numerical designation indicates corrosion resistant nuts are required. Designation omitted indicates alloy steel nut required.
- A — Class
- 8 — Associated drawing shell size
- 2 — Slash sheet
- M85528 — Military designator

Downloaded from http://www.everyspec.com



TABLE I. Mounting flanges.

| PART NUMBER M85528/2- | CLASS | SHELL SIZE | T THRD UNC-3B | A ±.003 | B ±.015 | C +.015 -.000 | D | E +.000 -.030 |
|---|---|---|---|---|---|---|---|---|
| 3 | A | 3 | 4-40 | .625 | .925 | .641 | .106/.166 | .325 |
| 6 | A | 6 | 4-40 | .469 | .755 | .535 | .106/.166 | .183 |
| 7 | A | 7 | 4-40 | .719 | 1.019 | .688 | .106/.166 | .433 |
| 8 | A | 8 | 4-40 | .594 | .880 | .570 | .106/.166 | .308 |
| 10 | A | 10 | 4-40 | .719 | 1.019 | .720 | .106/.166 | .433 |
| | B | | 6-32 | .812 | 1.187 | .749 | .123/.183 | .433 |
| 12 | A | 12 | 4-40 | .812 | 1.104 | .855 | .106/.166 | .530 |
| | B | | 6-32 | .938 | 1.132 | .938 | .123/.183 | .526 |
| 14 | A | 14 | 4-40 | .906 | 1.198 | .984 | .106/.166 | .624 |
| | B | | 6-32 | 1.031 | 1.406 | 1.031 | .123/.183 | .620 |
| 16 | A | 16 | 4-40 | .969 | 1.280 | 1.094 | .106/.166 | .687 |
| | B | | 6-32 | 1.125 | 1.500 | 1.125 | .123/.183 | .683 |
| 18 | A | 18 | 4-40 | 1.062 | 1.406 | 1.220 | .106/.166 | .780 |
| | B | | 6-32 | 1.203 | 1.578 | 1.234 | .123/.183 | .776 |
| 19 | A | 19 | 4-40 | .906 | 1.192 | .953 | .106/.166 | .620 |
| 20 | A | 20 | 4-40 | 1.156 | 1.535 | 1.345 | .106/.166 | .874 |
| | B | | 6-32 | 1.297 | 1.688 | 1.359 | .123/.183 | .865 |
| 22 | A | 22 | 4-40 | 1.250 | 1.665 | 1.478 | .106/.166 | .968 |
| | B | | 6-32 | 1.375 | 1.738 | 1.483 | .123/.183 | .907 |
| 24 | A | 24 | 6-32 | 1.500 | 1.891 | 1.560 | .123/.183 | 1.000 |
| | B | | 6-32 | 1.375 | 1.785 | 1.595 | .123/.183 | 1.031 |
| 25 | A | 25 | 6-32 | 1.500 | 1.891 | 1.658 | .123/.183 | 1.125 |
| 27 | A | 27 | 4-40 | .969 | 1.255 | 1.094 | .106/.166 | .683 |
| 28 | A | 28 | 6-32 | 1.562 | 2.000 | 1.820 | .123/.183 | 1.125 |
| 32 | A | 32 | 6-32 | 1.750 | 2.312 | 2.062 | .123/.183 | 1.188 |
| 36 | A | 36 | 6-32 | 1.938 | 2.500 | 2.312 | .123/.183 | 1.375 |
| 37 | A | 37 | 4-40 | 1.187 | 1.500 | 1.281 | .106/.166 | .874 |
| 61 | A | 61 | 4-40 | 1.437 | 1.812 | 1.594 | .106/.166 | 1.062 |

TABLE II Mounting flange, cross reference Type II, Class A

| PROC SPEC | MIL-STD | SHELL SIZES | PART NO | ASSOCIATED DRAWING SHELL SIZES |
|---|---|---|---|---|
| MIL-C-5015 | 3100 | 8S 10 10SL 12S 12 14S 14 16S 16 18<br>20 22 24 28 32 36 | M85528/2 | 8 10 -- 12 12 14 14 16 16 18<br>20 22 24 -- -- -- |
| | 3102 | 8S 10S 10SL 12S 12 14S 14 16S 16 18<br>20 22 24 28 32 36 | | 8 10 -- 12 12 14 14 16 16 18<br>20 22 24 -- -- -- |
| MIL-C-26482 | 3110 | 8 10 12 14 16 18 20 22 24 | | 8 10 12 14 16 18 20 22 24 |
| | 3112 | 8 10 12 14 16 18 20 22 24 | | -- -- -- -- -- -- -- -- 24 |
| | 3120 | 8 10 12 14 16 18 20 22 24 | | 8 10 12 14 16 18 20 22 24 |
| | 3122 | 8 10 12 14 16 18 20 22 24 | | -- -- -- -- -- -- -- -- 24 |
| | 3470 | 8 10 12 14 16 18 20 22 24 | | -- 10 -- 14 -- -- -- -- -- |
| | 3472 | 8 10 12 14 16 18 20 22 24 | | -- 12 -- -- -- -- -- -- -- |
| MIL-C-81703 | 3130 | 3 7 12 19 27 37 | | -- 10 12 14 16 -- |
| MIL-C-27599 | 20026 | 9 11 13 15 17 19 21 23 25 | | 10 12 14 16 18 20 22 24 |
| | 20030 | 9 11 13 15 17 19 21 23 25 | | 10 12 14 16 18 20 22 24 |
| | 27334 | 8 10 12 14 16 18 20 22 24 | | 8 10 12 14 16 18 20 22 24 |
| | 27335 | 8 10 12 14 16 18 20 22 24 | | 8 10 12 14 16 18 20 22 24 |
| | 27338 | 8 10 12 14 16 18 20 22 24 | | -- 10 12 14 16 18 20 22 24 |
| | 27339 | 8 10 12 14 16 18 20 22 24 | | -- 10 12 14 16 18 20 22 24 |
| MIL-C-38999 | 27466 | 9 11 13 15 17 19 21 23 25 | | 10 12 14 16 18 20 22 24 |
| | 27469 | 9 11 13 15 17 19 21 23 25 | | 10 12 14 16 18 20 22 24 |
| | 27472 | 8 10 12 14 16 18 20 22 24 | | 8 10 12 14 16 18 20 22 24 |
| | 27475 | 8 10 12 14 16 18 20 22 24 | | -- 10 12 14 16 18 20 22 24 |
| | 27476 | 8 10 12 14 16 18 20 22 24 | | -- 10 12 14 16 18 20 22 24 |
| | 27496 | 9 11 13 15 17 19 21 23 25 | | 10 12 14 16 18 20 22 24 |
| | 27497 | 8 10 12 14 16 18 20 22 24 | | -- -- -- 14 -- -- -- -- |
| | 27499 | 8 10 12 14 16 18 20 22 24 | | 8 10 12 14 16 18 20 22 24 |
| | 27505 | 9 11 13 15 17 19 21 23 25 | | 10 12 14 16 18 20 22 24 |
| | 27508 | 8 10 12 14 16 18 20 22 24 | | 8 10 12 14 16 18 20 22 24 |
| | 27513 | 8 10 12 14 16 18 20 22 24 | | 8 10 12 14 16 18 20 22 24 |
| | 27515 | 9 11 13 15 17 19 21 23 25 | | 10 12 14 16 18 20 22 24 |
| MIL-C-81511 | ----- | -- -- -- -- -- -- -- -- -- | | -- -- -- -- -- -- -- -- -- |
| MIL-C-83723 | /1A | 8 10 12 14 16 18 20 22 24 | | 8 10 12 14 16 18 20 22 24 |
| | /2B | 8 10 12 14 16 18 20 22 24 | | 8 10 12 14 16 18 20 22 24 |
| | /3B | 10 12 14 16 18 20 22 24 | | 12 -- -- -- -- -- -- 24 |
| | /4B | 10 12 14 16 18 20 22 24 | | -- -- -- -- -- -- -- 24 |



Downloaded from http://www.everyspec.com

TABLE III Mounting flange, cross reference Type II, Class B

| PROC SPEC | MIL-STD | SHELL SIZES | PART NO | ASSOCIATED DRAWING SHELL SIZES |
|---|---|---|---|---|
| MIL-C-5015 | 3100 | 8S 10 10SL 12S 12 14S 14 16S 16 18 | M85528/2 | -- -- -- -- -- -- -- -- -- |
| | | 20 22 24 28 32 36 | | -- -- -- -- -- -- |
| | 3102 | 8S 10S 10SL 12S 12 14S 14 16S 16 18 | | -- -- -- -- -- -- -- -- -- |
| | | 20 22 24 28 32 36 | | -- -- -- -- -- -- |
| MIL-C-26482 | 3110 | 8 10 12 14 16 18 20 22 24 | | -- -- -- -- -- -- -- -- 22 |
| | 3112 | 8 10 12 14 16 18 20 22 24 | | -- -- -- -- -- -- -- -- 22 |
| | 3120 | 8 10 12 14 16 18 20 22 24 | | -- -- -- -- -- -- -- -- 22 |
| | 3122 | 8 10 12 14 16 18 20 22 24 | | -- -- -- -- -- -- -- -- 22 |
| | 3470 | 8 10 12 14 16 18 20 22 24 | | -- -- -- -- -- -- -- -- -- |
| | 3472 | 8 10 12 14 16 18 20 22 24 | | -- -- -- -- -- -- -- -- -- |
| MIL-C-81703 | 3130 | 3 7 12 19 27 37 | | -- -- -- -- -- -- |
| MIL-C-27599 | 20026 | 9 11 13 15 17 19 21 23 25 | | -- -- -- -- -- -- -- 22 24 |
| | 20030 | 9 11 13 15 17 19 21 23 25 | | -- -- -- -- -- -- -- -- -- |
| | 27334 | 8 10 12 14 16 18 20 22 24 | | -- -- -- -- -- -- -- -- -- |
| | 27335 | 8 10 12 14 16 18 20 22 24 | | -- -- -- -- -- -- -- -- 22 |
| | 27338 | 8 10 12 14 16 18 20 22 24 | | -- -- -- -- -- -- -- -- -- |
| | 27339 | 8 10 12 14 16 18 20 22 24 | | -- -- -- -- -- -- -- -- -- |
| MIL-C-38999 | 27466 | 9 11 13 15 17 19 21 23 25 | | -- -- -- -- -- -- -- 22 -- |
| | 27469 | 9 11 13 15 17 19 21 23 25 | | -- -- -- -- -- -- -- -- -- |
| | 27472 | 8 10 12 14 16 18 20 22 24 | | -- -- -- -- -- -- -- -- -- |
| | 27475 | 8 10 12 14 16 18 20 22 24 | | -- -- -- -- -- -- -- -- -- |
| | 27476 | 8 10 12 14 16 18 20 22 24 | | -- -- -- -- -- -- -- -- -- |
| | 27496 | 9 11 13 15 17 19 21 23 25 | | -- -- -- -- -- -- -- 22 24 |
| | 27497 | 8 10 12 14 16 18 20 22 24 | | -- -- -- -- -- -- -- -- -- |
| | 27499 | 8 10 12 14 16 18 20 22 24 | | -- -- -- -- -- -- -- -- 22 |
| | 27505 | 9 11 13 15 17 19 21 23 25 | | -- -- -- -- -- -- -- 22 -- |
| | 27508 | 8 10 12 14 16 18 20 22 24 | | -- -- -- -- -- -- -- -- -- |
| | 27513 | 8 10 12 14 16 18 20 22 24 | | -- -- -- -- -- -- -- -- 22 |
| | 27515 | 9 11 13 15 17 19 21 23 25 | | -- -- -- -- -- -- -- 22 -- |
| MIL-C-81511 | ----- | -- -- -- -- -- -- -- -- -- | | -- -- -- -- -- -- -- -- -- |
| MIL-C-83723 | /1A | 8 10 12 14 16 18 20 22 24 | | -- -- -- -- -- -- -- -- 22 |
| | /2B | 8 10 12 14 16 18 20 22 24 | | -- -- -- -- -- -- -- -- 22 |
| | /3B | 10 12 14 16 18 20 22 24 -- | | 10 12 14 16 18 20 22 24 |
| | /4B | 10 12 14 16 18 20 22 24 -- | | 10 12 14 16 18 20 22 24 |



Downloaded from http://www.everyspec.com

Downloaded from http://www.everyspec.com



Custodians:
Army - CR
Navy - AS
Air Force - 85

Review activities:
Army - AR, MI
Navy - EC, SH
Air Force - 11, 99
DLA - ES

User activities:
Army
Navy
Air Force

Preparing activity:
Navy - AS
(Project No. 5935-3284-2)