MIL-C-6499E
7 July 1970

SUPERSEDING
MIL-C-006499D(USAF)
11 May 1964
MIL-C-6499C
15 August 1961

MILITARY SPECIFICATION

CLOCK, AIRCRAFT, MECHANICAL, TYPE A-13A

This specification is mandatory for use by all Departments and Agencies of the Department of Defense.

1. SCOPE

1.1 This specification covers the requirements for an unlighted mechanical aircraft clock having a 1-7/8-inch dial and a 1-hour elapsed time capability, designated as Clock, Aircraft, Mechanical, Type A-13A.

1.2 Classification. The clock shall be one of the two following types:

a. Type A-13A-1, having fluorescent luminescent hand and dial markings.

b. Type A-13A-2, having lusterless white hand and dial markings.

2. APPLICABLE DOCUMENTS

2.1 The following documents, of the issue in effect on date of invitation for bids or request for proposal, form a part of this specification to the extent specified herein.

SPECIFICATIONS

Federal

DD-G-451	Glass, Flat and Corrugated, For Glazing, Mirrors, and Other Uses
PPP-B-601	Box, Wood, Cleated-Plywood
PPP-T-360	Time Measuring Instruments; Packing of

Military

MIL-C-675	Coating of Glass Optical Elements (Anti-Reflection)
MIL-D-1000	Drawings, Engineering and Associated Lists
MIL-R-6855	Rubber; Synthetic, Sheet, Molded, and Extruded, for Aircraft Applications
MIL-A-8625	Anodic Coatings, For Aluminum and Aluminum Alloys
MIL-L-25142	Luminescent Material, Fluorescent
MIL-B-27497	Bearing, Jewel, Sapphire, Synthetic

STANDARDS

Federal

FED-STD-595	Colors

Military

MIL-STD-130	Identification Marking of U. S. Military Property
MIL-STD-143	Specifications and Standards, Order of Precedence For The Selection of
MIL-STD-810	Environmental Test Methods for Aerospace and Ground Equipment
MIL-STD-831	Test Reports, Preparation of
MIL-STD-889	Dissimilar Metals
MS33558	Numerals and Letters, Aircraft Instrument Dial, Standard Form of
MS51053	Setscrew-Fluted Socket, Alloy Steel, Cadmium Plated, NC-3A

Air Force - Navy Aeronautical

AN 565	Setscrew-Hexagon and Fluted Socket, Headless

(Copies of documents required by contractors in connection with specific procurement functions should be obtained from the procuring activity or as directed by the contracting officer.)

3. REQUIREMENTS

3.1 Preproduction. This specification provides for preproduction testing.

3.2 Selection of specification and standards. Specifications and standards for necessary commodities and services not specified herein shall be selected in accordance with MIL-STD-143.

3.3 Materials and parts

3.3.1 Metals. Metals shall be of the corrosion-resistant type or suitably treated to resist corrosion due to fuels, salt spray, or other atmospheric conditions likely to be met in storage or normal service.

3.3.1.1 Dissimilar metals. Unless suitably protected against electrolytic corrosion, dissimilar metals shall not be used in intimate contact with each other. Dissimilar metals are defined in MIL-STD-889.

3.3.1.2 Light metal alloys. Aluminum, magnesium, and other lightweight alloys shall be used for all metal parts of the clock except where stressing, fire-resistance, or other requirements dictate the use of steel or other heavy metals.

3.3.2 Antimagnetic materials. Antimagnetic materials shall be used for all parts of the clock, except where magnetic materials are essential. When the use of magnetic material is necessary, all magnetic material shall be demagnetized prior to fabrication of parts.

3.3.3 Fungus-inert materials. Materials that are not nutrients for fungi shall be used to the greatest extent practicable. In cases where materials that are nutrient for fungi must be used and are not sealed, such materials shall be treated with a fingicidal agent acceptable to the procuring activity.

3.4 Design and construction. The type A-13/A clock shall be designed and sealed to insure that sand, dust, humidity, salt air, and fungus producing conditions in service life will not interfere with the proper operation of the equipment. The clock shall be so constructed that no parts will work loose in service. The clock shall be built to withstand without failure the strains, jars, vibrations, and other conditions incident to shipping, storage, installation, and service use.

3.4.1 Clock case. The clock case shall conform to figure 1. (See 6.4)

* 3.4.1.1 Case material. The case shall be constructed from aluminum alloy and shall be finished with a durable lusterless black, color 37038 of FED-STD-595.

3.4.1.2 Cover glass

3.4.1.2.1 Cover glass material. The case cover glass shall conform to type II, quality AA of DD-G-451. Any flaws permitted by DD-G-451 shall not interfere with reading the clock. The edges of the glass shall be ground or otherwise treated to remove roughness, nicks, or sharpness.

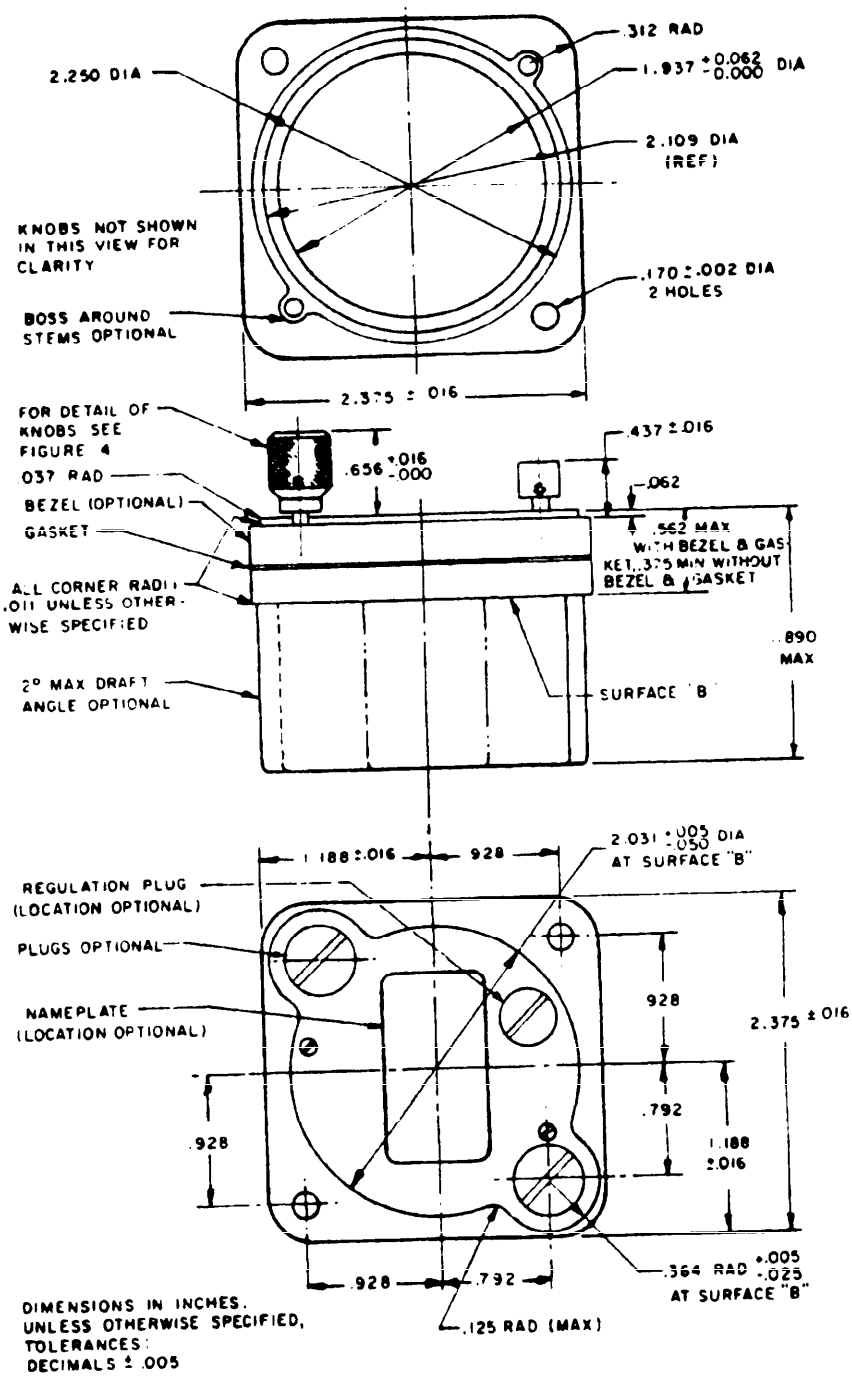

Figure 1. Clock case

3.4.1.2.2 Dimensions. The diameter of the cover glass shall be 2.052 ±0.010 inch. The thickness shall be 0.062 +0.016 or -0.000 inch.

3.4.1.2.3 Anti-reflection coating. Both surfaces of the cover glass shall be coated with a reflection-reducing coating in accordance with MIL-C-675.

3.4.1.2.4 Cover glass gasket. The cover glass gasket shall conform to class 2, grade 60, of MIL-R-6855, or a non-shrinking material acceptable to the procuring activity.

3.4.1.3 Snap or screw rings. If used, snap or screw rings shall be removable from the case without damage or breaking the case or cover glass. Steel snap or screw rings shall not be used.

* 3.4.1.4 Bezel. If a separate bezel is used (see figure 1), it shall be constructed from the same aluminum alloy as the case and shall be finished with a durable lusterless black, color 37038 of FED-STD-595. The bezel shall be held in place by at least 4 screws.

3.4.2 Hands and dial

3.4.2.1 Hands. The clock hands shall conform to the dimensions shown on figure 2, with a thickness equal to accepted commercial requirements. The hands shall be lightweight, sufficiently rigid to prevent oscillation under vibration, firmly attached to the mechanism, yet readily adjustable.

3.4.2.2 Dial. The clock dial shall be constructed from aluminum or aluminum alloy and shall have a step arrangement as shown on figure 2. The dial dimensions and markings shall conform to figure 3. The dial shall be so securely fastened by at least two screws into the case or frame of the mechanism that it will not loosen or turn when the clock is vibrated.

* 3.4.2.2.1 Dial and cover glass location. The distance between the inside surface of the cover glass and the main portion of the dial shall not exceed 0.25 inch. When attached to the movement mechanism frame the dial shall be as close to the cover glass as possible.

3.4.2.3 Finishes for dial and hands. The dial background and the unshaded area of the hands as shown on Figure 2 shall be lusterless black conforming to color 37038 of FED-STD-595. The shaded area of the hands as shown on figure 2 and the dial graduations and numerals shall be as follows:

a. For the type A-13A-1 clock, they shall be finished in fluorescent luminescent material conforming to type III of MIL-L-25142.

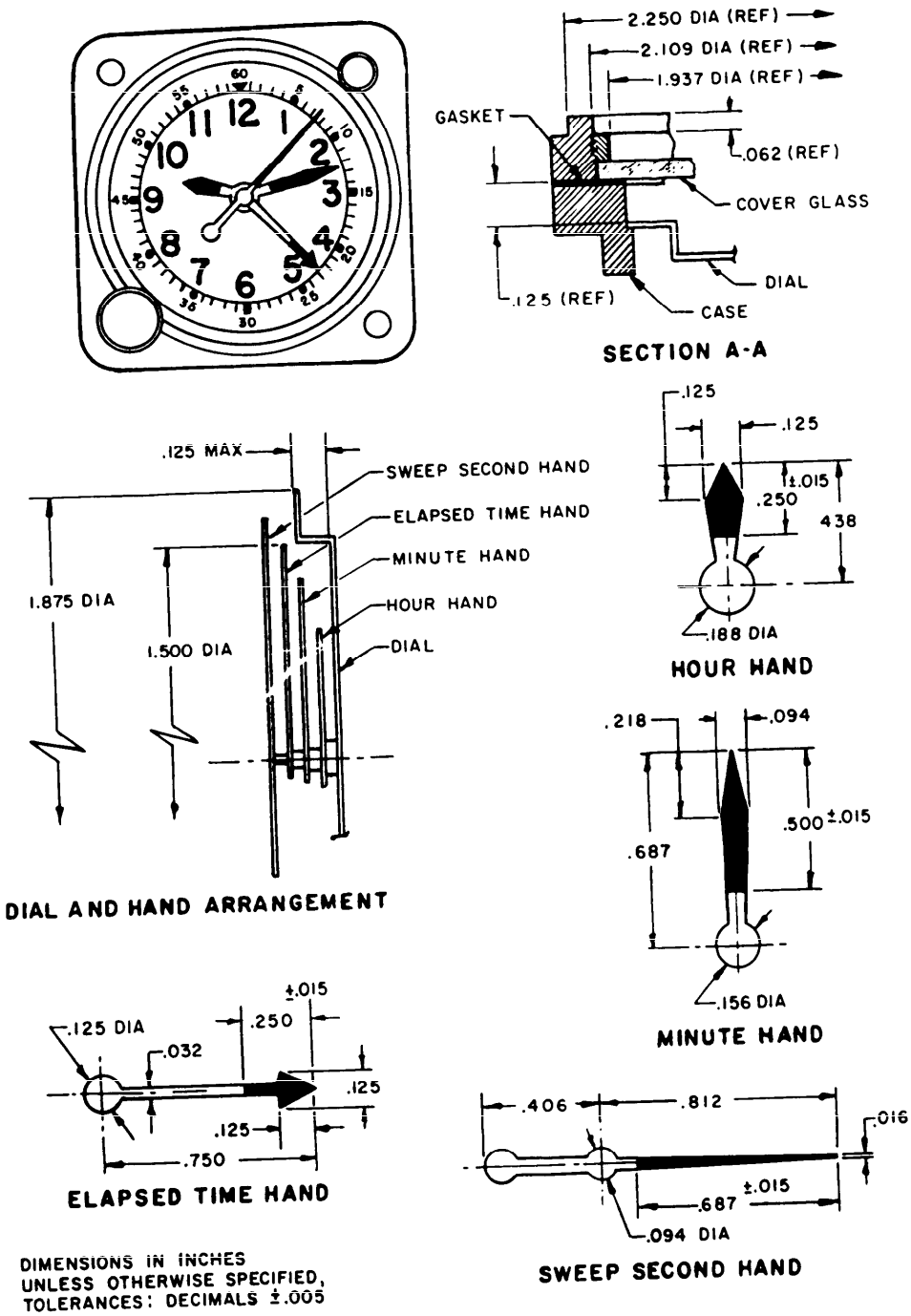

Figure 2. Clock hands

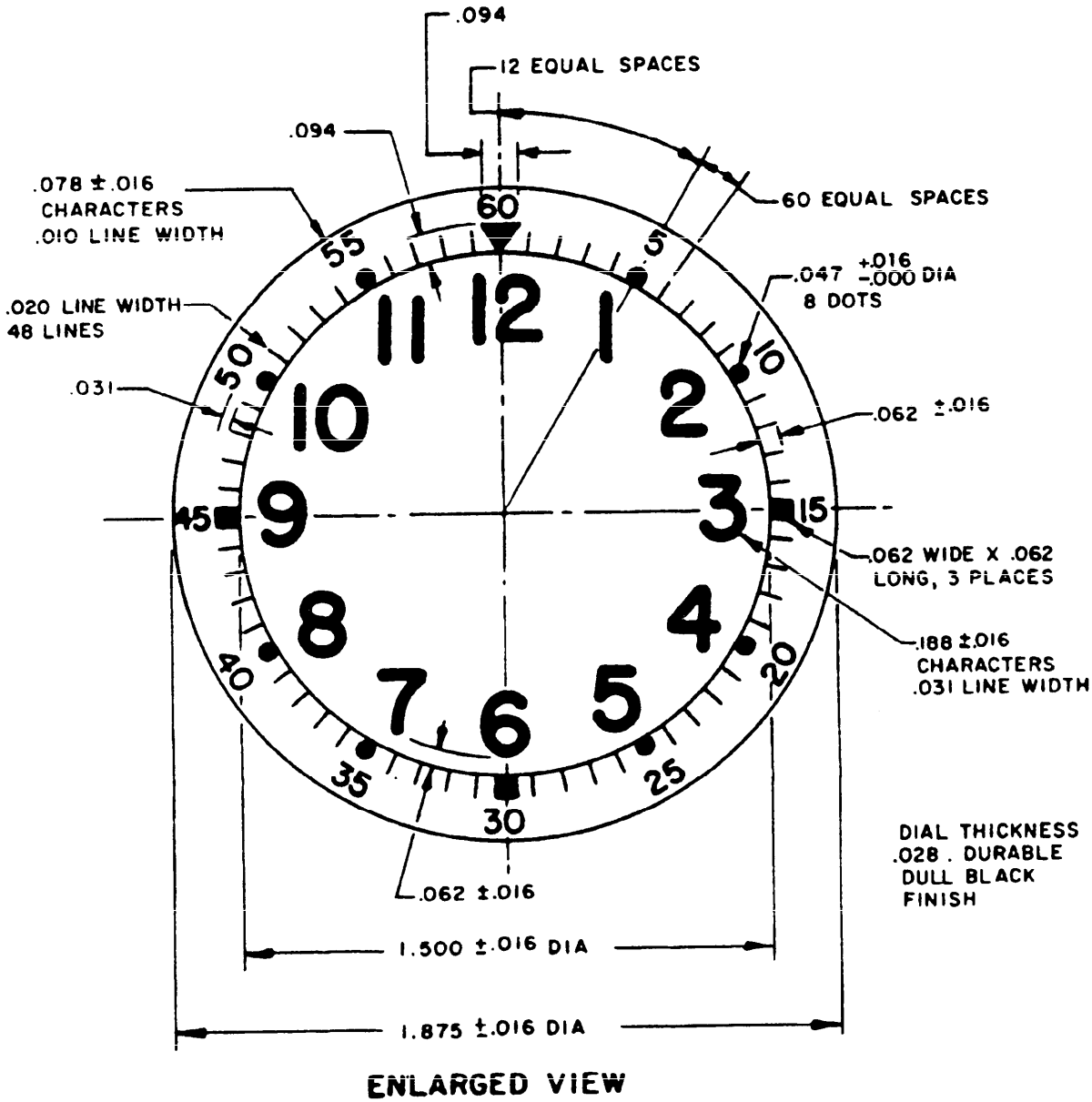

Figure 3. Clock dial

b. For the type A-13A-2 clock, they shall be finished in lusterless white conforming to color 37875 of FED-STD-595.

3.4.3 Clock controls

* 3.4.3.1 Winding and setting knob. A winding and setting knob conforming to the dimensions of figure 4 and located in the lower left-hand corner of the clock case shall wind the mainspring of the clock when turned in a clockwise direction and shall engage the setting gear for the hour and minute hands of the clock when pulled out into the setting position. The knob and shaft shall return to winding position when released. The knob shall have a diamond knurl surface and shall be fastened to the shaft with two setscrews, MS510534102 or AN565DC2L-2. The knob shall be free to turn counterclockwise with a ratchet gear.

* 3.4.3.2 Elapsed time knob. An elapsed time knob conforming to the dimensions on figure 4 and located in the upper right-hand corner of the clock case shall control the elapsed time function of the clock. Pushing the knob shall operate the three phases of this function as follows: when the elapsed time and sweep second hands are at rest at "60" on the dial, pushing the knob shall cause them to start; if the hands are moving, pushing the knob shall cause them to stop; of the hands are stopped elesewhere on the dial than at "60", pushing the knob shall cause them to fly back to "60". The elapsed time function shall not interfere with the hour and minute time hands. The knob shall be fastened to the shaft with one setscrew conforming to MS51053-102 or AN565DC2L-2.

* 3.4.3.3 Stems. The winding stem and the elapsed time stem shall be made of steel with a minimum carbon content of 0.75 percent and with a minimum degree of hardness equal to 45 on the Rockwell "C" scale. Each stem shall be milled to conform to the diameter shown on figure 4. Flats shall be provided for "seating" the setscrews but shall not extend to the end of the stems, causing them to appear to be notched.

3.4.4 Balance wheel and hairspring unit. The balance wheel and hairspring unit shall be temperature compensated.

3.4.4.1 Balance staff. The balance staff shall be readily removable and replaceable without disturbing the poise of the balance wheel.

3.4.4.2 Hairspring. The hairspring shall be constructed from corrosion-resisting metal.

3.4.4.3 Escapement. A fully jeweled lever escapement, including a roller jewel and two pallet stones, shall be provided.

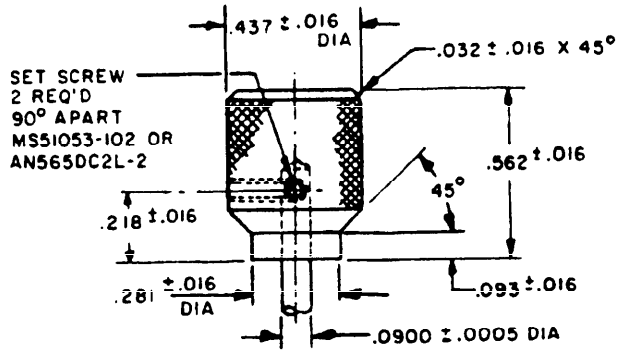

WINDING AND SETTING KNOB

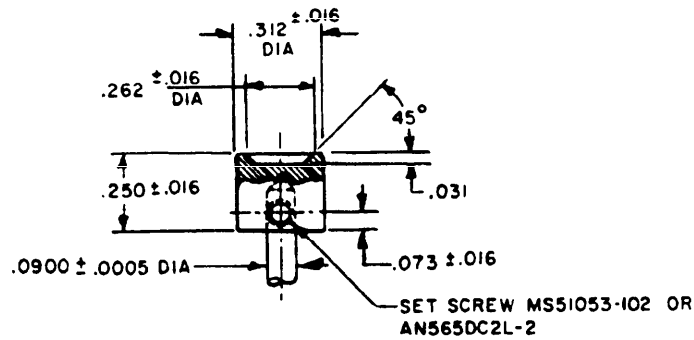

ELAPSED TIME KNOB

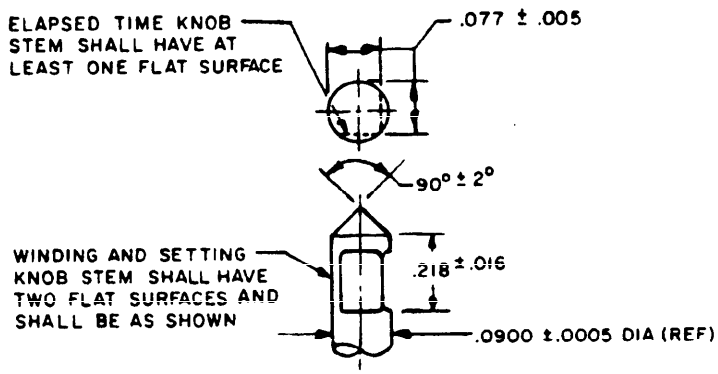

KNOB STEM

DIMENSIONS IN INCHES.
UNLESS OTHERWISE SPECIFIED,
TOLERANCES: DECIMALS ± .005

Figure 4. Clock knobs

3.4.4.4 Pallet, lever and escape wheel. The pallet, lever and escape wheel shall be made of steel with a minimum carbon content of 0.75 percent and with a minimum degree of hardness equal to 45 on the Rockwell "C" scale.

3.4.5 Lever regulator. A lever regulator to adjust the clock time rate shall be accessible from the regulator opening on the case and shall be centered on the regulator scale, within 10 percent of either the "fast" or "slow" scale range.

3.4.6 Movement. The clock shall have an 8-day movement with not less than 15 jewels. All jeweled bearings shall be in accordance with MIL-B-27497, except that deviations from the dimensions specified on the applicable MS standards will be permitted when approved by the procuring activity. End stone jewels shall be securely mounted in removable caps to facilitate cleaning and oiling. Location of the jewels shall be as follows:

Location	Number of jewels
Lever pallet	2
Roller	1
Balance (upper and lower pivot)	4 (2 each)
Pallet (upper and lower pivot)	2 (1 each)
Escape wheel (upper and lower pivot)	2 (1 each)
4th wheel (upper and lower pivot)	2 (1 each)
3rd wheel (upper and lower pivot)	2 (1 each)

3.4.6.1 Mainspring. The material for the mainspring shall be a corrosion resistant, high strength, unbreakable alloy.

3.4.7 Mounting screws and nuts

3.4.7.1 Mounting screws for installing the clock shall be type 6-32UNC-2 roundhead brass machine screws, having lusterless black oxidized or black nickel finish conforming to color 37038 of FED-STD-595. The screw length shall be sufficient to mount the clock on a 3/16-inch-thick panel.

3.4.7.2 Removable spring nuts, type 6-32UNC-2, shall be furnished to fit each mounting lug.

3.4.7.3 A sufficient number of these screws and nuts shall be furnished in a marked envelope, size 2-1/4 by 4 inches, and packaged with each clock.

3.4.7.3.1 Envelope marking. The envelope shall be marked as follows:

IMPORTANT

This envelope contains mounting screws and nuts.

3.4.8 Reliability. The clock shall be designed and constructed to provide maximum practical periods of time between failures of the clock. The clock shall have a mean-time-between failures (MTBF) of at least 2500 hours.

3.4.9 Maintenance provisions. The design of the clock shall permit ease and speed of maintainability for preventive and corrective maintenance.

3.4.10 Lubrication. The clock shall be sufficiently lubricated for at least 2 years' operation. The lubricant shall be of such quality that satisfactory lubrication will be provided when the clock is run at temperatures of +55°C to -35°C (+131°F to -31°F).

3.5 Performance. The performance of the clock shall be as specified herein and shall show no deterioration as a result of the tests specified in section 4.

* 3.5.1 Elapsed time function operation. When the elapsed time knob is pushed either easy or hard, it shall operate one of the three phases of the elapsed time functions specified in 3.4.3.2. The triangle under the number "60" shall be the zero position. On the fly-back or zero push, both the sweepsecond and the elapsed time hands shall return to the zero triangle and shall remain at this position until the knob is pushed for the starting function.

3.5.2 Rundown time. After being fully wound, the clock shall operate for a minimum of 8 days (192 hours) before stopping.

3.5.3 Rate and accuracy

3.5.3.1 Room temperature rate

3.5.3.1.1 Daily rate. The average of the daily rates for 4 consecutive days shall not exceed 30 seconds.

3.5.3.1.2 Accuracy criterion. No daily rate for the 4-day period shall differ from the average daily rate by more than 15 seconds.

3.5.3.2 Temperature compensation rates

3.5.3.2.1 Zero° C temperature. The rate of the clock when operated in an enviroment of 0°C for 6 hours shall not vary from the starting error by more than 10 seconds.

3.5.3.2.2 Minus 35°C temperature. The rate of the clock when operated in an environment of -35°C for 6 hours shall not vary from the starting error by more than 75 seconds.

3.5.3.2.3 Plus 55°C temperature. The rate of the clock when operated in an environment of +55°C for 6 hours shall not vary from the starting error by more than 15 seconds.

3.5.3.3 Vibration error rate. The rate of the clock when subjected to vibration as specified in 4.6.8 shall not vary from the starting error by more than 15 seconds during a period of 4-1/2 hours. During vibration, the oscillation at the tip of the minute and second hands shall not exceed 0.0625 inch. No screws or parts shall be loosened nor any parts damaged as a result of the vibration error test.

3.5.3.4 Rates after environmental exposure. The rate of the clock for 6 consecutive hours, starting no later than 1 hour after exposure to each of the following environmental conditions, shall not vary from the starting error by more than the number of seconds specified:

* a. Temperatures of +71°C and -62°C, nonoperating; +55°C and -35°C, operating : 15 seconds

b. 120 hours of relative humidity up to 100 percent: 20 seconds

c. Shock of 15g to be attained within 11 milliseconds ±10 percent: 20 seconds

* d. Vibration up to 10g within the range of 5 to 500 CPS: 20 seconds

* e. Magnetic field intensity of 60 ±1: 15 seconds.

3.6 Part numbering of interchangeable parts. All parts having the same manufacturer's part number shall be functionally and dimensionally interchangeable. The identification and part numbering requirements of MIL-D-1000 shall govern the manufacturer's part numbers and changes thereto.

3.7 Weight. The weight of the clock shall not exceed 12 ounces.

3.8 Finishes and protective coatings

3.8.1 Aluminum-alloy parts. Aluminum-alloy parts that are not sealed shall be covered with an anodic film conforming to MIL-A-8625. Aluminum-alloy dials and small holes and parts on which anodic film would interfere with proper performance need not be anodized.

3.8.2 The use of any protective coating that will crack, chip, or scale with age or extremes of atmospheric conditions shall not be used.

3.9 Operation markings

3.9.1 Dial scale. The dial scale numerals shall distinctly indicate the graduation to which each applies.

* 3.9.2 Dial markings. The form of letters and numerals on the dial shall conform to MS33558. All markings shall be durable to withstand usage encountered in service. The dial shall be marked in accordance with figure 3.

3.10 Identification of product. The equipment, assemblies, and parts shall be marked for identification in accordance with MIL-STD-130.

3.10.1 Movement marking. The clock movement shall be permanently stamped, engraved, or etched with the following information:

Manufacturer's name:
Manufacturer's trademark or code:
Manufacturer's movement serial number:
Number of jewels:
As applicable: Compensated or uncompensated

3.10.2 The clock case shall have a nameplate with the following information:

Clock, Aircraft, Mechanical, Type A-13A- (1 or 2, as applicable)
Specification MIL-C-6499
Manufacturer's part number:
Manufacturer's serial number (prefixed by year)
Contract or Order Nr:
Stock Number: FSN 6645-
Manufacturer's name:
U. S. Property

3.11 Workmanship. The aircraft clock, including all parts and accessories shall be finished in a thoroughly workmanlike manner. Particular attention shall be given to neatness and marking of assemblies, and to insuring that they are free from burrs and sharp edges.

3.11.1 Screw assemblies. Assembly screws and bolts shall be tight. The work "tight" means that the screw or bolt cannot be appreciably tightened further without damage or injury to the screws, bolts, or threads.

3.11.2 Cleaning. The aircraft clock shall be thoroughly cleaned of metal chips and other foreign material at final assembly.

3.11.2.1 Assembly area cleanliness. The minimum cleanliness conditions under which an aircraft clock shall be assembled shall be as follows:

a. A temperature and humidity-controlled room at a temperature of 23°C ±1.4°C at a distance of 36 inches above the floor with relative humidity not to exceed 45 percent at the temperature control point.

b. Inside a filtered air work station located in the temperature and humidity controlled room.

4. QUALITY ASSURANCE PROVISIONS

4.1 Responsibility for inspection. Unless otherwise specified in the contract or purchase order, the supplier is responsible for the performance of all inspection requirements as specified herein. Except as otherwise specified in the contract or order, the supplier may use his own or any other facilities suitable for the performance of the inspection requirements specified herein, unless disapproved by the Government. The Government reserves the right to perform any of the inspection set forth in the specification where such inspections are deemed necessary to assure supplies and services conform to prescribed requirements.

4.2 Classification of inspections. The examining and testing of the Type A-13A clock shall be classified as follows:

a. Preproduction inspections (4.4)

b. Quality conformance inspections (4.5).

4.3 Test conditions

4.3.1 Standard atmospheric conditions. Unless otherwise specified, all tests shall be made at standard atmospheric pressure (approximately 29.92 inches of mercury) and at room temperature (approximately 25°C (77°F). When tests are made with atmospheric pressure or room temperature differing materially from the above values, proper allowance shall be made for the change in instrument reading.

4.3.2 Attitude. Unless otherwise specified, the clock shall be tested in its normal operating position with the face vertical.

4.3.3 Temperature test precaution. To prevent condensation of moisture on the mechanism following exposure to the specified temperatures in the 0°C compensation test and the -35°C compensation test, the clock shall remain in the closed test chamber until the temperature has returned to normal.

4.3.4 Vibration stand. A vibration stand shall be used that will vibrate at any desired frequency between 500 and 3000 cycles per minute and will so subject the instrument to vibration that a point on the instrument case will describe, in a plane inclined 45 degrees to the horizontal, a circle as specified in 4.6.8.

4.4 Preproduction inspection

4.4.1 Preproduction test samples. The test samples shall consist of 10 clocks representative of the production clock. The samples shall be identified with the manufacturer's part number and shall be accompanied by such other information as required by the procuring activity. They shall be tested under the conditions specified herein and at the location designated by the contract.

4.4.1.1 Data to accompany test samples. The test samples shall be accompanied by the following data:

a. Brief operating data to enable test personnel to correctly operate the clock.

b. Engineering data in the form of assemblv drawings (2 sets) and calibration record charts of test chambers, meter gauges, and stands used to conduct preproduction tests.

4.4.1.2 Testing schedule. The sample clocks shall be subjected to the tests as specified in table I.

4.4.1.3 Preproduction for reliability. The clock shall be considered to have passed the reliability requirement of 3.4.9 if the 10 samples pass without failure the following tests when conducted as part of the preproduction testing specified in table I.

Test	Applicable paragraph
Operation of elapsed time function	4.6.2
Rundown	4.6.3
Room temperature rate	4.6.4
Zero degree compensation	4.6.5
Minus 35°C compensation	4.6.6
Plus 55°C compensation	4.6.7
Vibration error	4.6.8

Table I. Preproduction Tests

Type of Test	Sample Number										Applicable Paragraph
	1	2	3	4	5	6	7	8	9	10	
Examination of product	x	x	x	x	x	x	x	x	x	x	4.6.1
Operation of elapsed time function	x	x	x	x	x	x	x	x	x	x	4.6.2
Rundown	x	x	x	x	x	x	x	x	x	x	4.6.3
Room temperature rate	x	x	x	x	x	x	x	x	x	x	4.6.4
Zero degree temperature	x	x	x	x	x	x	x	x	x	x	4.6.5
Minus 35°C temperature	x	x	x	x	x	x	x	x	x	x	4.6.6
Plus 55°C temperature	x	x	x	x	x	x	x	x	x	x	4.6.7
Vibration error	x	x	x	x	x	x	x	x	x	x	4.6.8
High temperature	x	x									4.6.9.1
Low temperature			x	x							4.6.9.2
Humidity					x	x					4.6.9.3
Shock								x	x	x	4.6.9.4
Vibration									x	x	4.6.9.5
Operation in a magnetic field	x	x	x	x	x	x	x	x	x	x	4.6.9.6

4.4.2 Test report, test samples, and data for preproduction testing approval. The contractor shall furnish to the procuring activity a report of the preproduction tests, including the following:

a. Test report: Three notarized copies of the test report in accordance with MIL-STD-831.

b. Test samples: Two tested samples of the clocks and two clocks that have passed the tests specified in 4.6.1, 4.6.2, and 4.6.4.

c. Data: The data required under 4.4.1.1.

4.4.3 Preproduction tests. Preproduction tests shall consist of the tests specified under 4.6, subject to the test conditions specified herein.

4.5 Quality conformance inspections. Quality conformance inspections shall consist of individual tests and sampling plans and tests.

4.5.1 Individual tests. Each clock shall be subjected to the following tests:

Tests	Applicable paragraph
Examination of product	4.6.1
Operation of elapsed time function	4.6.2
Room Temperature rate	4.6.4
Reliability acceptance	4.6.10

4.5.2 Sampling plans and tests

4.5.2.1 Sampling plan A. Unless otherwise specified by the procuring activity, 2 clocks shall be selected at random from the first 20 clocks of the initial production run and, having passed the individual tests, shall be subjected to the following tests:

Tests	Sample Nr 1	Sample Nr 2	Applicable paragraph
High temperature		x	4.6.9.1
Low temperature		x	4.6.9.2
Humidity	x		4.6.9.3
Vibration	x		4.6.9.5
Operation in a magnetic field	x		4.6.9.6

4.5.2.2 Sampling plan B. Four clocks shall be selected at random from every 50, or fraction thereof, manufactured on the production run and shall be subjected to the following tests:

Tests	Applicable paragraph
Rundown	4.6.3
Zero degree temperature	4.6.5
Minus 35°C temperature	4.6.6
Plus 55°C temperature	4.6.7
Vibration error	4.6.8
Shock	4.6.9.4

4.5.2.3 Rejection and retest. When one clock selected from the production run fails to meet the specification, no items still on hand or later produced shall be accepted until the extent and cause of failure have been determined and appropriately corrected. The contractor shall explain to the Government representative the cause of failure and the action taken to preclude recurrence. After correction, all of the tests shall be repeated.

4.5.2.4 Individual tests may continue. For the production reasons, individual tests may be continued pending the investigation of a sampling test failure. But final acceptance of the clocks on hand or later produced shall not be made until it is determined that all clocks meet all the requirements of the specification.

4.5.3 Defects in clocks already accepted. The investigation of a test failure could indicate that defects may exist in clocks already accepted. If so, the contractor shall fully advise the procuring activity of all defects likely to be found and methods of correcting them.

4.6 Test methods

4.6.1 Examination of product. The clock shall be inspected to verify that the materials, design and construction, necessary mechanical measurements, markings, and workmanship comply with this specification.

4.6.2 Operation of elapsed time function. The clock shall be fully wound and tested for action of the sweep second and elapsed time hands on start, stop, and fly-back operation.

4.6.2.1 Elapsed time fly-back (15-minute interval). The clock shall be tested for 4 successive operations of the sweep second and elapsed time hands over intervals of approximately 15 minutes, starting from zero (60) index. Upon operation of the fly-back mechanism, the hands shall return to the exact index position.

4.6.2.2 Elapsed time fly-back (30-minute interval). The clock shall be tested for 8 successive operations of the sweep second and elapsed time hands over intervals of approximately 30 minutes, starting from zero (60) index. Upon operation of the fly-back mechanism, the ahnds shall return to the exact index position.

4.6.3 Rundown. The clock shall be fully wound and allowed to run down. It shall not run down before 8 days (192 hours). The actual running time shall be recorded.

4.6.3.1 This test may be run in conjunction with the rate test specfied in 4.6.4.

4.6.4 Room temperature rate test. The clock shall run for at least 1 day to break in the parts. The clock shall then be fully wound and the starting error recorded. The room temperature rate test shall continue for 4 consecutive days with daily readings and without rewinding. The elapsed time function shall be running continually. The daily rate, average daily rate, and the variation form the average daily rate shall be computed from the test data. (see 6.3.3)

4.6.4.1 Average daily rate. The average daily rate for the consecutive 4-day test period shall not exceed 30 seconds.

4.6.4.2 Accuracy verification. The difference between any daily rate and the average daily rate shall not exceed 15 seconds.

4.6.5 Zero° C temperature test. The clock shall be fully wound and then subjected to a temperature of 0° C ±2° C (32°F ±3.6°F) for a period of 6 hours. The clock shall not gain nor lose more than 10 seconds during this period.

4.6.6 Minus 35° C temperature test. The clock shall be fully wound and then subjected to a temperature of -35° C ±2° C (131°F ±3.6° F) for a period of 6 hours. The clock shall not gain nor lose more than 15 seconds during this period.

4.6.7 Plus 55° C temperature test. The clock shall be fully wound and then subjected to a temperature of ±55° C ±2° C (-31° F ±3.6° F) for a period of 6 hours. The clock shall not gain nor lose more than 75 seconds during this period.

4.6.8 Vibration error test. The clock shall be fully wound and mounted in its normal upright position on a vibration stand with all hands operating. The clock shall be so vibrated for periods of 30 minutes at each of the following frequencies: 500, 750, 1000, 1250, 1500, 1750, 2000, 2500, and 3000 cpm, that a point on the clock describes a circle, the diameter of which shall be 0.009 to 0.011 inch. The oscillation of the hands shall not exceed 0.0625 inch. The clock shall not gain nor lose more than 15 seconds during this period. After the vibration error test, the clock shall be carefully examined for loosened screws or other parts and damage that would affect subsequent operation.

4.6.9 Environmental tests. The equipment shall be subjected to the following environmental tests in accordance with the methods of MIL-STD-810, except for the magnetic field test which shall be conducted in accordance with the method specified herein. The procedures of MIL-STD-810 as specified herein shall be used with exceptions and additions where indicated. It shall not be necessary to operate the clock at ambient conditions prior to conducting the environmental tests in order to collect comparison data for the "pretest performance record" as specified in MIL-STD-810; the required data may be collected in conjunction with the rate test of 4.6.4 and used for comparison in checking clock performance after exposure to environmental limits.

4.6.9.1 High temperature test. The clock shall be subjected to a high temperature test in accordance with method 501, procedure I, except that exposure to a temperature of 71° C shall be for 24 hours and the test specified in 4.6.9.1.1 shall be substituted for the phase of the test calling for operation at highest operating temperature.

4.6.9.1.1 Rate check. After completion (within 1 hour) of the 24-hour high temperature exposure, the clock shall be fully wound and operated for 6 consecutive hours at room temperature. The clock shall not gain nor lose more than 15 seconds during this 6-hour period.

4.6.9.2 Low temperature test. The clock shall be subjected to a low temperature test in accordance with method 502, procedure I, except that exposure to a temperature of -62°C shall be for 24 hours and the test specified in 4.6.9.2.1 shall be substituted for the phase of the test calling for operation at lowest operating temperature.

4.6.9.2.1 Rate check. After completion (within 1 hour) of the low temperature exposure test, the clock shall be fully wound and operated for 6 consecutive hours at room temperature. The clock shall not gain nor lose more than 15 seconds during this 6-hour period.

4.6.9.3 Humidity test. The clock shall be subjected to a humidity test in accordance with method 507, procedure I, except that the total test time shall be 120 hours (5 cycles).

4.6.9.3.1 Rate check. Within 1 hour after completion of the humidity test, the clock shall be fully wound and operated for 6 consecutive hours. The clock shall not gain nor lose more than 20 seconds during this 6-hour period.

* 4.6.9.4 Shock test. The clock shall be subjected to a shock test in accordance with method 516, procedure I. An acceleration of 15g shall be attained with the clock operating and being oriented in each of the

following positions:

a. Face up

b. Face down

c. Face vertical and the numeral "15" up

d. Face vertical and the numeral "30" up

e. Face vertical and the numeral "45" up

f. Face vertical and the numberal "60" up

4.6.9.4.1 Rate check. Within 1 hour after completion of the shock test, the clock shall be examined for evidence of damage that would adversely affect subsequent operation. The clock shall then be fully wound and operated for 6 consecutive hours. The clock shall not gain nor lose more than 20 seconds during this 6-hour period.

* 4.6.9.5 Vibration test. The clock shall be subjected to a vibration test in accordance with method 514 and shall be designated as equipment category (a). The test shall be performed in accordance with procedure I and curve Z. All clock hands shall be operating during the test.

4.6.9.5.1 Rate check. Within 1 hour after completion of the vibration test, the clock shall be fully wound and operated for 6 consecutive hours. The clock shall not gain nor lose more than 20 seconds during this 6-hour period.

* 4.6.9.6 Operation in a magnetic field. The clock shall be subjected, for at least 10 seconds, to a magnetic field strength of 60 ±1 oersted.

4.6.9.6.1 Rate check. Immediately upon removal from the field strength subjection, the clock shall be fully wound and operated for 6 consecutive hours. The clock rate shall not differ from the average daily rate by more than 15 seconds during this 6-hour period.

4.6.10 Reliability acceptance test. The reliability acceptance criterion specified in this paragraph shall be applied to each production run. This criterion shall be that no clocks shall fail to pass the room temperature rate test specified in 4.6.4.

4.6.10.1 Rejection. When one or more clocks from a production run fail to pass the test as specified in 4.6.10 because of rate tolerance, the clock may be regulated and the test rerun. If the failure is complete stoppage, indicating defective jewels, bearings, gear binding, other damaged or broken parts, or dirt particles, all clocks on the production run shall be withheld until full particulars concerning the cause, extent of failure, and corrective action taken are furnished to the procuring activity.

5. PREPARATION FOR DELIVERY

* 5.1 Packaging, packing, and marking. Packaging, packing, marking, and the level of packaging and packing as specified in the contract or purchase order (see 6.2) shall be in accordance with PPP-T-360, group 3, except as follows:

a. Containers for level A packing shall be the overseas type, and surface treated, in accordance with the requirements of PPP-B-601.

b. Fiberboard boxes for level B packing shall be of the weather-resistant class.

5.2 Precautionary marking. The following precautionary marking shall appear on two opposite sides of each interior package, whenever practicable, depending on the size of the carton, and shall also appear on the exterior shipping container:

FRAGILE
DELICATE INSTRUMENT
HANDLE WITH CARE

6. NOTES

6.1 Intended use. The clocks covered by this specification are intended for use as the primary timepiece and to provide an elapsed time capability in aircraft requiring an unlighted clock.

6.2 Ordering data. Procurement documents should specify the requirements specified herein.

6.2.1 Procurement requirements

a. Title, number, and date of this specification

b. Applicable clock type

c. Preproduction samples and tests

(1) Number of preproduction samples

(2) Point of inspection

(3) Requirement for concurrent delivery of each sample and its test data.

The procuring activity should be given at least 10 days prior notice when the preproduction tests are to be conducted so that they may be supervised or witnessed, if desired, by a Government representative.

d. Selection of applicable levels of packaging and packing (see 5.1).

6.2.2 Contract data requirements. Data specified under 4.4.2 and other data required will be delivered as identified on a numbered DD Form 1664 when specified on a DD Form 1423 incorporated into the contract.

6.3 Definitions. For the purpose of this specification the following definitions shall apply.

6.3.1 Error. Algebraic time difference in seconds between the test clock and National Bureau of Standards broadcast time. (Station WWV).

6.3.1.1 Starting error. Error at start of test period.

6.3.2 Rate. Difference between the error at the start and the error at the end of a given time interval.

6.3.2.1 Daily rate. Rate in a 24-hour interval.

6.3.3 Example of rate and accuracy computation (measurements in seconds):

	Daily Reading	Daily Rate	Difference between each Daily Rate (DR) and the Average Daily Rate (ADR)
Starting error	0		
1st day	+30	+30	30: variation from 20 = 10
2nd day	+50	+20	20: no variation
3rd day	+60	+10	10: variation form 20 = 10
4th day	+80	+20	20: no variation
		80	Therefore, no DR differs from the
		80÷4=20	ADR by more than 15 seconds
		20=ADR	

6.4 International standardization agreements. Certain provisions under 3.4.1 of this specification are the subject of international standardization agreements STANAG 3405 and ABC Air Standard 10/32. When amendment, revision, or cancellation of this specification is proposed which will effect or violate the international agreement concerned, the preparing activity will take appropriate reconciliation action through international standardization channels including departmental standardization offices, if required.

6.5 The margins of this specification are marked with an asterisk to indicate where changes (additions, modifications, corrections, deletions) from the previous issue were made. This was done as a convenience only and the Government assumes no liability whatsoever for any inaccuracies in these notations. Bidders and contractors are cautioned to evaluate the requirements of this document based on the entire content irrespective of the marignal notations and relationship to the previous issue.

Custodian:
Air Force - 11
Army - MU
Navy - AS

Reviewers:
Air Force - 82
Army - AV

Users:
Navy - CG, MC

Preparing activity:
Air Force - 11

Project no. 6645-0251

INSTRUCTIONS: In a continuing effort to make our standardization documents better, the DoD provides this form for use in submitting comments and suggestions for improvements. All users of military standardization documents are invited to provide suggestions. This form may be detached, folded along the lines indicated, taped along the loose edge *(DO NOT STAPLE)*, and mailed. In block 5, be as specific as possible about particular problem areas such as wording which required interpretation, was too rigid, restrictive, loose, ambiguous, or was incompatible, and give proposed wording changes which would alleviate the problems. Enter in block 6 any remarks not related to a specific paragraph of the document. If block 7 is filled out, an acknowledgement will be mailed to you within 30 days to let you know that your comments were received and are being considered.

NOTE: This form may not be used to request copies of documents, nor to request waivers, deviations, or clarification of specification requirements on current contracts. Comments submitted on this form do not constitute or imply authorization to waive any portion of the referenced document*(s)* or to amend contractual requirements.

(Fold along this line)

(Fold along this line)

DEPARTMENT OF THE AIR FORCE

NO POSTAGE NECESSARY IF MAILED IN THE UNITED STATES

OFFICIAL BUSINESS
PENALTY FOR PRIVATE USE $300

BUSINESS REPLY MAIL
FIRST CLASS PERMIT NO. 73236 WASHINGTON D. C.

POSTAGE WILL BE PAID BY THE DEPARTMENT OF THE AIR FORCE

ASD/(ASNPS)
Wright-Patterson AFB, O 45433

(TO DETACH THIS FORM, CUT ALONG THIS LINE.)

STANDARDIZATION DOCUMENT IMPROVEMENT PROPOSAL

(See Instructions – Reverse Side)

1. DOCUMENT NUMBER

2. DOCUMENT TITLE

3a. NAME OF SUBMITTING ORGANIZATION

4. TYPE OF ORGANIZATION *(Mark one)*

- ☐ VENDOR
- ☐ USER
- ☐ MANUFACTURER
- ☐ OTHER *(Specify)*: _____

b. ADDRESS *(Street, City, State, ZIP Code)*

5. PROBLEM AREAS

a. Paragraph Number and Wording:

b. Recommended Wording:

c. Reason/Rationale for Recommendation:

6. REMARKS

7a. NAME OF SUBMITTER *(Last, First, MI)* – Optional

b. WORK TELEPHONE NUMBER *(Include Area Code)* – Optional

c. MAILING ADDRESS *(Street, City, State, ZIP Code)* – Optional

8. DATE OF SUBMISSION *(YYMMDD)*

DD FORM 82 MAR 1426

PREVIOUS EDITION IS OBSOLETE.