MIL-C-5898D(USAF)
04 JUNE 1985
SUPERSEDING
MIL-C-5898C(USAF)
1 July 1970

MILITARY SPECIFICATION

CORDS, ELECTRICAL
(WF-5/U, WF-14/U, WD-34/U, WM-53/U, WM-85/U)

This specification is approved for use by the Department of the Air Force, and is available for use by all Departments and Agencies of the Department of Defense.

1. SCOPE

1.1 Scope. This specification covers conductor insulated, jacketed, electrical cords used to fabricate combination headset-microphone extension cords, and microphone extension cords for installations in military aircraft equipped with intercommunication sets.

1.2 Classification. Cords shall be of the types specified in table I.

TABLE I. Types of cords

Type	Number of conductors
WF-5/U	4
WF-14/U	4
WD-34/U	2
WM-53/U	5
WM-85/U	5

2. APPLICABLE DOCUMENTS

2.1 Government documents.

2.1.1 Specifications and standards. Unless otherwise specified, the following specifications and standards of the issue listed in that issue of the Department of Defense Index of Specifications and Standards (DoDISS) specified in the solicitation, form a part of this specification to the extent specified herein.

SPECIFICATIONS

FEDERAL

QQ-W-343 - Wire, Electrical, Copper (Uninsulated).

MILITARY

MIL-C-572 - Cord, Yarns and Monofilaments Organic Synthetic Fiber.
MIL-I-4997 - Insulating and Jacketing Compounds for use in Cords, Cordages, and Cables.

Beneficial comments (recommendations, additions, deletions) and any pertinent data which may be of use in improving this document should be addressed to: Electronic Support Division AFLC, 2750 ABW/ES, Gentile AF Station, Dayton, OH 45444 by using the self-addressed Standardization Document Improvement Proposal (DD Form 1426) appearing at the end of this document or by letter.

MIL-W-5088 - Wiring, Aerospace Vehicle.
MIL-C-12000 - Cable, Cord, and Wire, Electric; Packaging of.
MIL-Y-16698 - Yarn, Cotton.

STANDARDS

FEDERAL

FED-STD-228 - Cable and Wire, Insulated, Methods of Testing.

MILITARY

MIL-STD-104 - Limit for Electrical Insulation Color.
MIL-STD-105 - Sampling Procedures and Tables for Inspection by Attributes.

MIL-STD-130 - Identification Marking of U.S. Military Property.
MIL-STD-202 - Test Methods For Electronic And Electrical Component Parts.
MIL-STD-810 - Environmental Test Methods and Engineering Guidelines.
MIL-STD-831 - Test Reports, Preparation of.

(Copies of specifications, standards, handbooks, drawings, and publications required by manufacturers in connection with specific acquisition functions should be obtained from the contracting activity or as directed by the contracting officer.)

2.2 Other publications. The following documents form a part of this specification to the extent specified herein. The issues of the documents which are indicated as DoD adopted shall be the issue listed in the current DoDISS and the supplement thereto, if applicable.

AMERICAN SOCIETY FOR TESTING MATERIALS (ASTM)

ASTM-B-33 - Tinned Soft or Annealed Copper Wire for Electrical Purposes.

(Application for copies should be addressed to the American Society for Testing Material, 1916 Race Street, Philadelphia, PA 19103.)

INSULATED CABLE ENGINEERS ASSOCIATION (ICEA)

ICEA-S-66-524 Cross-Linked-Thermosetting-Polyethylene-Insulated Wire and Cable for the Transmission and Distribution of Electrical Energy.

(Application for copies should be addressed to the National Electrical Manufacturers Association, 2101 L Street, NW, Washington, DC 20036.)

(Industry association specifications and standards are generally available for reference from libraries. They are also distributed among technical groups and using federal agencies.)

2.3 Order of precedence. In the event of a conflict between the text of this specification and the references cited herein, the text of this specification shall take precedence.

3. REQUIREMENTS

3.1 First article. When specified, a sample shall be subjected to first article inspection (see 4.3 and 6.2).

3.2 Insulated conductors.

3.2.1 Individual strands. The individual strands shall be AWG number 40 (0.0031 inch diameter) cadmium bronze wire and shall be tinned before bunching. The minimum tensile strength of the strands after tinning shall be 90,000 pounds per square inch and shall be of at least 80 percent conductivity grade.

3.2.2 Conductors. The conductors shall be bunch stranded and the lay of the strands shall be approximately one-half inch. The nominal area of each conductor shall be 442 circular mils and the minimum area 430 circular mils.

3.2.3 Wrap. Wrapping material shall comply with MIL-C-572. The yarn may be omitted provided the conductors in the finished cords are free stripping and free from any detrimental effects which will interfere with normal soldering of the strands of the conductors in the finished cord.

3.2.4 Insulation. The insulation compound for the individual conductors shall be formulated to provide a material to meet the electrical, ozone, cold bend, aging, oil immersion, and bending requirements as specified herein. (See MIL-W-5088).

3.2.4.1 Physical requirements of insulation. The insulation shall show no evidence of cracking or other damage as a result of the aging and bending tests as specified herein. The conductor shall be flexible and resilient throughout the temperature range from -55°C to +85°C. The thickness of the insulation at any point along the conductor shall be not less than 0.010 inch (0.25 mm).

3.2.4.2 Outside diameter of insulated conductor. The outside diameter of the insulated conductor shall be 0.060 inch (1.52 mm) nominal.

3.2.5 Coloring of insulation. The insulation of individual conductors shall be colored in accordance with table II for type cords specified in the contract. The colors shall be class 1, nominal chip conforming to MIL-STD-104.

TABLE II. Color coding.

	Color				
Order	WF-57U	WF-147U	WD-347U	WM-537U	WM-857U
1	White	Red	Red	White	Red
2	Red	Green	Green	Red	Green
3	Green	White	---	Green	White
4	Black	Black	---	Black	Black
5	---	---	---	Yellow	Yellow

3.2.6 Copper braid. The copper braid where used shall be fabric cored and shall be composed of 8 carriers of AWG number 36 tinned copper wire, three ends per carrier having a height of spiral of 0.200 ±0.020 inch (50.8 ±0.51 mm). The tinned copper wire shall be in accordance with ASTM B-33. The fabric core shall be fungus-resistant cotton, and the finished braid shall be capable of 2,000 flexing cycles without electrical discontinuity.

3.2.7 Staycord. The staycord shall be braided of fungus-resistant cotton threads. The staycord for all cords except type WD-34 shall have a diameter of 0.052 ±0.010 inch (1.32 ±0.25 mm) and shall have a breaking strength of not less than 30 pounds. The staycord for cord type WD-34 shall have a maximum diameter of 0.055 inch (1.40 mm) and shall have a breaking strength of not less than 15 pounds. The staycord shall not damage the insulation of the conductors when the cord is bent or stretched.

3.3 Cabling.

3.3.1 Cabling of WF-14/U.

a. The red and green conductors shall be twisted together with a left hand lay of approximately 0.750 inch (19.05 mm). The white and black conductors shall be twisted together with a left hand lay of approximately 1.250 inches (31.75 mm).

b. A close wind consisting of a minimum of 32 ends of conducting cotton shall be applied over each twisted pair. The conducting-cotton wind shall be constructed of fungus-resistant number 60, 2-ply yarn having a maximum resistance of 1.2 megohms per inch. The maximum resistance of the wind in the completed cord shall be 1.5 megohms per foot.

c. The two conducting-cotton-wrapped pairs shall be twisted together with a right hand lay of approximately 1.500 inches (38.10 mm) with a copper braid in one interstice and a staycord in the other interstice. Fungus-resistant cotton filler shall be used in each interstice to give the cord a reasonably circular cross section. The two pairs and the copper braid shall be twisted in such a manner as to insure contact between the braid and both conducting-cotton-wraps.

3.3.2 Cabling of WM-85/U. The cabling of cord WM-85/U shall be as specified in 3.3.1a through 3.3.1c except a yellow conductor shall be used in the interstice with the staycord.

3.3.3 Cabling of WM-53/U. Five conductors in the order specified in table II shall be spiralled around a central core with a lay of approximately 0.531 inch (13.49 mm). The central core shall contain a staycord. The conductors shall be wrapped around the central core in such a manner as to provide relatively free movement of the conductors over the staycord when the finished cord is bent or stretched.

3.3.4 Cabling of WF-5/U. The cabling of cord WF-5/U shall be as specified in 3.3.3 except the yellow conductor shall not be used.

3.3.5 Cabling of WD-34/U.

a. The two conductors as specified in table II shall be twisted together with two staycords with approximately 0.500 inch (12.70 mm) left hand lay.

b. A close wrap of fine fungus-resistant cotton shall be applied with a right hand lay over the cabled assembly.

3.4 Jacketing. After cabling, the assembly shall be covered overall and shall be centered in a jacket compound so formulated to fulfill the requirements specified herein. The jacketing material shall not adhere to the conductor insulation. Optionally, a thin fungus-resistant, cotton wrapping may be applied over the assembly before the jacket is applied provided suitable flexibility is maintained in the finished cord. After jacketing, the cord shall be reasonably smooth, firmly bound, tough, elastic, and a homogeneous mass.

3.4.1 Jacketing compound. The jacketing compound shall be low-temperature polychloroprene or crosslinked polyolefin and shall meet the material and physical property requirements of table IV and operating temperature range and cold bend as specified in MIL-I-4997. (For the cold bend test, cord types WF-14/U and WM-85/U shall use a mandrel size 3.0 by outside diameter.)

3.4.2 Wall thickness. The minimum wall thickness of the jacketing material shall be as specified in table III.

3.5 Outside diameter of cord. The outside diameter of the finished cord shall be in accordance with table III.

TABLE III. Wall thickness and outside diameter.

Cord type	WF-5/U	WF-14/U	WO-34/U	WM-53/U	WM-85/U
Thickness (inch)	0.025 (.64 mm)	0.025 (.64 mm)	0.012 (.31 mm)	0.025 (.64 mm)	0.025 (.64 mm)
Outside diameter (inch)	0.280 ±0.010 (7.11 ±0.25 mm)	0.300 ±0.010 (7.62 ±0.25 mm)	0.160 ±0.010 (4.06 ±0.25 mm)	0.280 ±0.010 (7.11 ±0.25 mm)	0.305 ±0.010 (7.75 ±0.25 mm)

TABLE IV. Physical property requirements for jacketing compounds of finished cord specimens.

Wall thickness, inch property	0.014 to 0.019 (0.04 to 0.48 mm)	0.020 to 0.030 (0.51 to 0.76 mm)	over 0.030 (0.76 mm)
Unaged:			
Tensile strength minimum, lbf/in^2	1200	1500	1800
Elongation, minimum, percent	250	250	300
Set, maximum, inch	----	----	.375
After 166 hours aging in air oven test at 70°C:			
Tensile strength, minimum percent of original	75	75	75
Elongation, minimum, percent of original	75	75	75
After oil immersion:			
Tensile strength, minimum percent of original	50	50	60
Elongation, minimum percent of original	50	50	60
Ozone resistance:	no cracks	no cracks	no cracks
After 2 days when wrapped 4 times around the outside mandrel at room temperature, and 7 days in atmosphere, containing 25 parts ±5 parts ozone per one hundred million parts of air at a temperature of 50°C			
Flame resistance: Burn or charr of flag	25% or less	25% or less	25% or less

3.6 Flexing.

3.6.1 Cord. The finished cord shall be capable of withstanding at least 25,000 flexing cycles without showing evidence of:

a. Serious damage to the jacket such as splits or ruptures.

b. Damage to the insulation of the individual conductors.

c. Electrical discontinuity or short circuit.

3.7 Fungus-resistant treatment. Materials used in the fabrication which are not fungus inert shall be subjected to such treatment as to render the material fungus-resistant. The fungicide used shall have no detrimental effects on the finished cord.

3.8 Electrical requirements. The finished cord shall meet the following electrical requirements.

3.8.1 Dielectric strength. The insulation on conductors of the finished cord shall withstand, without flashover or breakdown, the application of 500 volts alternating potential of commercial line frequency for 5 seconds.

3.8.2 Insulation resistance. The insulation resistance of the finished cord shall be not less than 100 megohms per 1,000 feet when measured at or corrected to 15.6°C.

3.8.3 Conductor resistance. The resistance per conductor per 100 feet of the finished cord shall not exceed 4.0 ohms.

3.8.4 Isolation. The minimum isolation shall be in accordance with table V.

TABLE V. Isolation.

Frequency	Electrostatic		Electromagnetic	
	WF-14/U	WM-85/U	WF-14/U	WM-85/U
20,000	62	60	48	45
15,000	63	60.5	49	45
10,000	64	61	50	45
5,000	65	61.5	51	45
1,000	66	62	51	46

3.9 Identification. The cord shall be marked for identification in accordance with MIL-STD-130 by applying ink stamping on the jacket at 12 to 24 inch intervals throughout the entire length. The identification shall read lengthwise along the cord as specified in table VI.

TABLE VI. Identification for marking.

Type	Manufacturer part number	Military specification	Manufacturer name
WM-53/U	*	MIL-C-5898(USAF)	*
WF-5/U	*	MIL-C-5898(USAF)	*
WF-14/U	*	MIL-C-5898(USAF)	*
WD-34/U	*	MIL-C-5898(USAF)	*
WM-85/U	*	MIL-C-5898(USAF)	*

*Applicable information to be supplied by the manufacturer.

3.10 Solderability. The finished cord shall be tested as specified in the solderability tests in 4.5.10 and when tinning the wire, the insulation shall not shrink more than 0.031 inch (.79 mm) length wise and shall not expand outward from the wire.

3.11 Ozone resistance. The finished cord shall be subject to the ozone resistance test as specified in 4.5.11. NOTE: The ozone resistance test is not required if crosslinked polyolefin material is used for jacket insulation compound.

3.12 Flammability. Flammability test shall be performed on the cord specimen in accordance with 4.5.5.1 and 4.5.5.2.

3.13 Cable lengths. The cords shall be furnished on spools, in spool or reel type package, or on reels. Each spool, package or reel shall contain not less than 450 feet nor more than 550 feet. The maximum number of continuous lengths per spool, package or reel shall be three. The length of any one piece thereof shall be not less than 50 feet.

3.14 Workmanship. All workmanship shall be in accordance with the best commercial practices. The cords shall be processed in such a manner as to be uniform in quality and shall be free from defects that will affect life, serviceability, or appearance.

4. QUALITY ASSURANCE PROVISIONS

4.1 Responsibility for inspection. Unless otherwise specified in the contract or purchase order, the contractor is responsible for the performance of all inspection requirements as specified herein. Except as otherwise specified in the contract or purchase order, the contractor may use his own or any other facilities suitable for the performance of the inspection requirements specified herein, unless disapproved by the Government. The Government reserves the right to perform any of the inspections set forth in the specification where such inspections are deemed necessary to assure supplies and services conform to prescribed requirements.

4.2 Definitions.

4.2.1 Test conditions. Unless otherwise specified, or indicated, the specimen under inspection shall be tested under the following environmental conditions.

a. Temperature: +15°C to +35°C.

b. Pressure: Normal atmospheric.

c. Humidity: Prevailing ambient (25 to 90 percent relative).

4.2.2 Lot. A lot shall consist of all cord, of the same type, manufactured under the same basic conditions and offered for inspection at one time.

4.2.3 Unit of product. The unit of product is defined as each continuous length of cord and shall not exceed 550 feet.

4.2.4 Classification of inspections. The inspection requirements for cords covered by this specification shall be classified as follows:

a. First article inspection (see 4.3).

b. Quality conformance inspection (see 4.4).

4.3 First article inspection. First article inspection shall be performed on a representative sample of cord which would normally represent the product fabricated under the manufacturer's production methods. The sample shall meet all requirements specified in table VII.

TABLE VII. First article inspection.

Inspection	Requirement paragraph	Test paragraph
Conductor	3.2	---
Strands, conductors, wrap	3.2.1, 3.2.2, 3.2.3	4.4
Insulation	3.2.4	---
Material properties	3.2.4	4.5.3
Aging and bending	3.2.4.1	4.5.2
Wall thickness	3.2.4.1	4.5.1
Outside diameter	3.2.4.2	4.5.1
Color	See table II	4.5.1
Staycord	3.2.7	---
Material	3.2.7	4.4
Breaking strength	3.2.7	4.5.7
Dimensions	3.2.7	4.5.1
Copper braid, design and material	3.2.6	4.4
Conducting cotton	3.3.1b	4.4
Cabling	3.3	---
Conductors	3.3.1	---
Lay	thru	---
Filler		4.4
Wrap	3.3.5	4.4
Jacket	3.4	---
Compound	3.4.1	4.5.1
Wall thickness	See table III	4.5.1
Outside diameter	See table III	4.5.1
Identification	See table VI	4.5.1
Wrap	3.4	4.4
Environmental	---	---
Air oven aging	3.4.1	4.5.2
Oil immersion	3.4.1	4.5.4
Flammability	3.4.1	4.5.5
Ozone 1/	3.4.1	4.5.11
Flexing, conductor life	3.6.1	4.5.7.2
Flexing, braid life	3.2.6	4.5.7.3
Fungus resistant	3.7	4.5.3
Solderability	3.10	4.5.10
Electrical	3.8	---
Conductor resistance	3.8.3	4.5.6.1
Insulation resistance	3.8.2	4.5.6.3
Dielectric strength	3.8.1	4.5.6.2
Isolation	3.8.4	4.5.9

1/ The ozone resistance test is not required if crosslinked polyolefin material is used for jacket insulating compound.

4.3.1 First article test program. Prior to any formal testing, the manufacturer shall submit a draft of his proposed test program to the acquiring activity for approval. The proposed test program shall include the following:

a. List of tests to be performed.

b. Detailed test procedures of each test to be performed.

c. List of test equipment to be used, identified by manufacturer and type number.

d. Copies of data record forms to be used.

4.3.2 First article inspection approval. Three certified copies of the first article test report shall be prepared in accordance with MIL-STD-831 and shall be submitted to the cognizant engineering agency through the acquiring activity for approval. The first article test reports shall be accompanied with the following data:

a. Identification of all materials used.

b. The Government contract or purchase order number.

c. Manufacturer's name and part number.

d. A minimum of 20 feet of cord to be furnished on the contract.

4.4 Quality conformance inspection. Quality conformance inspection shall consist of individual inspection and sampling inspection.

4.4.1 Individual inspection. Each finished length of cord shall be subjected to the following:

a. Conductor resistance.

b. Dielectric strength.

c. Insulation resistance.

d. Workmanship.

4.4.1.2 Sampling inspection. Unless otherwise specified herein, statistical sampling for inspection shall be in accordance with MIL-STD-105 for general inspection level II. The acceptable quality level (AQL) shall be as specified in table VIII.

4.4.2 Inspection of packaging. The sampling and inspection of the preservation, packing, and container marking shall be in accordance with the requirements of MIL-C-12000.

TABLE VIII. Sampling tests.

Inspection	Requirement paragraph	Method paragraph	AQL
Identification	See table VI	4.5.1	4.0
Outside diameter of conductor	3.2.4.2	4.5.1	4.0
Outside diameter of cord	See table III	4.5.1	4.0
Staycord, diameter	3.2.7	4.5.1	4.0
Staycord, breaking strength	3.2.7	4.5.8	1.0
Isolation	3.8.4	4.5.9	1.0

4.4.3 Statements. The manufacturer shall issue certified statements that the following, where applicable, conforms to the requirements specified herein.

a. Cadmium bronze.

b. Conducting cotton yarn in accordance with MIL-Y-16698.

c. Tinned copper wire in accordance with QQ-W-343.

d. Fungus resistant materials in accordance with MIL-STD-810.

4.5 Methods of inspection.

4.5.1 Visual and dimensional inspection. The finished cords shall be given a visual and dimensional inspection to determine conformance of:

a. Color of conductors.

b. Identification.

c. Workmanship.

d. Outside diameter of individual conductors.

e. Thickness of conductor insulation.

f. Thickness of jacketing material.

g. Outside diameter of cords.

h. Diameter of staycord.

4.5.2 Aging and bending test. A conductor specimen shall be selected from each 20,000 feet of cord, or one month's production, whichever is less, and aged in air oven test of ICEA S-66-524 except that the aging period and temperature shall be as specified in table IV. After aging, the specimen shall be wrapped five times around a 0.156 inch (3.96 mm) diameter mandrel.

4.5.3 Cord specimen. A cord specimen shall be selected from each 250,000 feet of cord, or six month's production, whichever is less, and shall be subjected to a 28-day fungus-resistant test, procedure I, in accordance with MIL-STD-810, method 508, procedure II.

4.5.4 Oil immersion. Oil immersion shall be performed on sheath specimens in accordance with method 4223 of FED-STD-228.

4.5.5 Flammability.

4.5.5.1 Apparatus. This test is to be conducted in a 3-sided enclosure that is 12 inches wide (305 mm), 14 inches deep (355 mm), and 24 inches high (610 mm). The top and front are to be open. The specimen is to be secured with its longitudinal axis vertical in the center of the enclosure (see figure 1).

A flat, horizontal layer of untreated surgical cotton is to be placed on the floor of the enclosure and centered under the specimen. The upper surface of the cotton is to be no more than 9.5 inches (241 mm) below point B, which is the point at which the tip of the blue inner cone of the test flame will touch the specimen (see figure 1).

A Tirrill gas burner with or without a gas pilot light attached is to supply the flame. The barrel of the burner is to extend 4 inches (102 mm) above the air inlets, and its inside diameter is to be .375 inch (9.53 mm). While the barrel is vertical, the overall height of the flame is to be adjusted to 5 inches (127 mm). The blue inner cone is to be 1.500 inches high (38.10 mm) and the temperature at its tip is to be 836°C (1500°F) or higher. Without disturbing the adjustments for the height of the flame, the valve supplying gas to the burner flame and the separate valve supplying gas to any pilot flame are to be closed.

A wedge to which the base of the burner can be secured is to be provided for tilting the barrel 20° from the vertical while the longitudinal axis of the barrel remains in a vertical plane. The burner is to be secured to the wedge and the assembly is to be placed in an adjustable support fixture.

4.5.5.2 Procedure. The fixture is to be adjusted laterally (see figure 1) to place the longitudinal axis of the barrel in the same vertical plane as the longitudinal axis of the specimen. The plane is to be parallel to the sides of the enclosure. The fixture is also to be adjusted toward the rear or front of the enclosure (see figure 1) to position the point A, which is the intersection of the longitudinal axis of the barrel with the plane of the tip of the barrel, 1.500 inches (38.10 mm) from the point.

A .500 inch wide (12.7 mm) strip of unreinforced 5 mil thick (approximately 0.1 millimeter) 60-pound kraft paper, (five hundred 25 x 36-inch ungummed sheets (635 x 914 millimeters) have a mass of 60 pounds (27.2 kilograms mass) that is gummed on one side is to be used to make an indicator flag. The gumming is to be moistened just sufficiently to permit adhesion. With the gum toward the specimen, the strip is to be wrapped around the specimen once with its lower edge 10 inches (254 mm) above B, the point at which the blue inner cone will touch the specimen. The ends of the strip are to be pasted together evenly and trimmed to provide a flag which projects .750 inch (19.05 mm) from the specimen toward the rear of the enclosure (see figure 1).

If the burner has a gas pilot light, the valve supplying gas to the pilot is to be opened and the pilot lit. If the burner does not have a gas pilot light, it is to be supported as indicated above in a position away from the specimen and then lit. This operation and the remainder of the test are to be conducted under a forced-draft hood operating to provide adequate ventilation but avoiding drafts which affect the flame.

If the burner has a gas pilot light, the valve supplying gas to the burner is to be opened to apply the flame to the specimen automatically. This valve is to be held open for 15 seconds, closed for 15 seconds, opened for 15 seconds, etc., for a total of five 15-second applications of flame to the specimen with 15 seconds between applications. If the burner does not have a gas pilot light, the burner is to be moved into position to apply the flame to the specimen, kept there for 15 seconds, removed for 15 seconds, etc., for a total of five 15-second applications with 15 seconds between applications.

In any case, the flame is not to be reapplied until any flaming caused by the previous application ceases of its own accord, even though the time interval between applications may exceed 15 seconds.

Counting from the instant of the last removal of the burner flame, the duration of any flaming of the specimen is to be noted and recorded. Note also is to be taken and recorded of whether any flaming or glowing particles or flaming drops fall from the specimen.

If more than 25 percent of the indicator flag is burned or charred (soot that can be removed with a cloth or the fingers, and brown scorching are be ignored) after any of the five applications of flame or if flaming or glowing particles or flaming drops fall from the specimen and ignite the cotton at any time during the test (flameless charring of the cotton is to be ignored), the wire or cable of which the specimen is representative is to be judged to have conveyed flame. Any wire or cable from which a specimen continues to flame longer than 60 seconds after any application of the flame is not acceptable.

4.5.6 Electrical tests.

4.5.6.1 Conductor resistance. The resistance of each conductor of the cord shall be measured in a bridge circuit. The arithmetical average of the measured values shall be used to calculate the conductor resistance.

4.5.6.2 Dielectric strength. An alternating potential as specified in 3.8.1 shall be applied between two terminals, one being each conductor in turn and the other terminal being all the remaining conductors tied together. The voltage source shall have a capacity of not less than 3 kVA.

4.5.6.3 Insulation resistance. Immediately after successfully passing the dielectric strength test, the insulation resistance shall be measured using a galvanometer with shunts and a dc voltage source of not less than 125 V dc. The connections shall be as specified in 4.5.6.2. The test may be terminated when the galvanometer indicates a steady insulation resistance value has been obtained. The measured insulation resistance values shall be corrected to 15.6°C if measurements are made at temperature other than 15.6°C.

4.5.7 Flexing test. Sample lengths of cord shall be selected from each 100,000 feet or one month's production, whichever is less, and subjected to the following:

4.5.7.1 Preparation. Five specimens, each approximately 1.5 feet (457 mm) long shall be clamped and suspended through holes in a rectangular (.500 inch by 0.625 inch) (12.70 mm by 15.88 mm) metal bar. The diameter of the 0.625 inch (15.88 mm) through holes shall be 0.005 inch (0.13 mm) to 0.010 inch (0.25 mm) greater than the diameter of the cord undergoing the tests. The through holes shall incorporate a 0.125 inch (3.18 mm) radius at the end from which the cords emerge (bending point). The cords shall be clamped in such a manner that they will not turn in the holes during flexing. The clamping points shall be immediately above the metal bar and cord clamps shall rest on top of the metal bar. A knot shall be tied near the free end of each cord and a 3 pound weight shall be suspended from each knot, except type WD-34/U, which shall have 1 pound weights suspended from the knots. The metal bar, supported horizontally, shall be positioned in a test jig which will enable oscillation about its longitudinal axis through an angle of 120° (60° each side of vertical).

4.5.7.2 Conductor flexing life. The conductors of each specimen shall be connected in series with a 6-volt lamp and a suitable power supply to indicate electrical continuity. The metal bar shall then be oscillated at approximately 85 cycles per minute until electrical discontinuity occurs. The conductor flexing life shall be calculated by summing the total number of flexing cycles per specimen and dividing by the total number of specimens.

4.5.7.3 Braid flexing life. Where applicable, the metal braid shall be connected in series with the circuit described in 4.5.7.2. The metal bar shall be oscillated at approximately 85 cycles per minute until electrical discontinuity occurs. The arithmetical average of the number of flexing cycles per specimen shall be taken as the braid flexing life.

4.5.8 Staycord strength. A suitable device shall be used to determine the breaking strength of the staycord.

4.5.9 Isolation tests. Where applicable, a specimen of 55 feet ±2 inches (50.8 mm) shall be tested in circuits as shown on figure 2 for both electrostatic and electromagnetic isolation. Calculations shall be as shown on figure 2.

4.5.10 Solderability test (see 3.10). The outer jacket is to be stripped in approximately 3 inches (76.2 mm); each individual wire is to be stripped approximately 0.250 inch (6.35 mm). The bare wire is to be twisted by hand and remain at its minimum diameter in 5 twists or less and shall not spread or fray at the end. The insulation must have a melting point higher than 600°F. Solder in accordance with MIL-STD-202, method 208.

4.5.11 Ozone resistance (see 3.11). The cable shall be wrapped around a mandrel that is four times the outside diameter of the specimen in such a manner that they are kept taut throughout the test. The mandrels and specimens shall be kept at room temperature for 2 days, after which they shall be placed in an atmosphere containing 25 parts ±5 parts of ozone per one hundred million parts of air. The temperature of 50°C shall be maintained for a period of 7 days. After the test has been completed, the jacket of the specimen shall be inspected through a magnifying glass of a least 3 diameters.

4.6 Rejection and retest. When one item selected from a production fails to meet the requirements of the specification, no item still on hand or later produced shall be accepted until the extent and cause of failure are determined. Final acceptance of items on hand or later produced shall not be made until it is determined that items meet all the requirements of this specification.

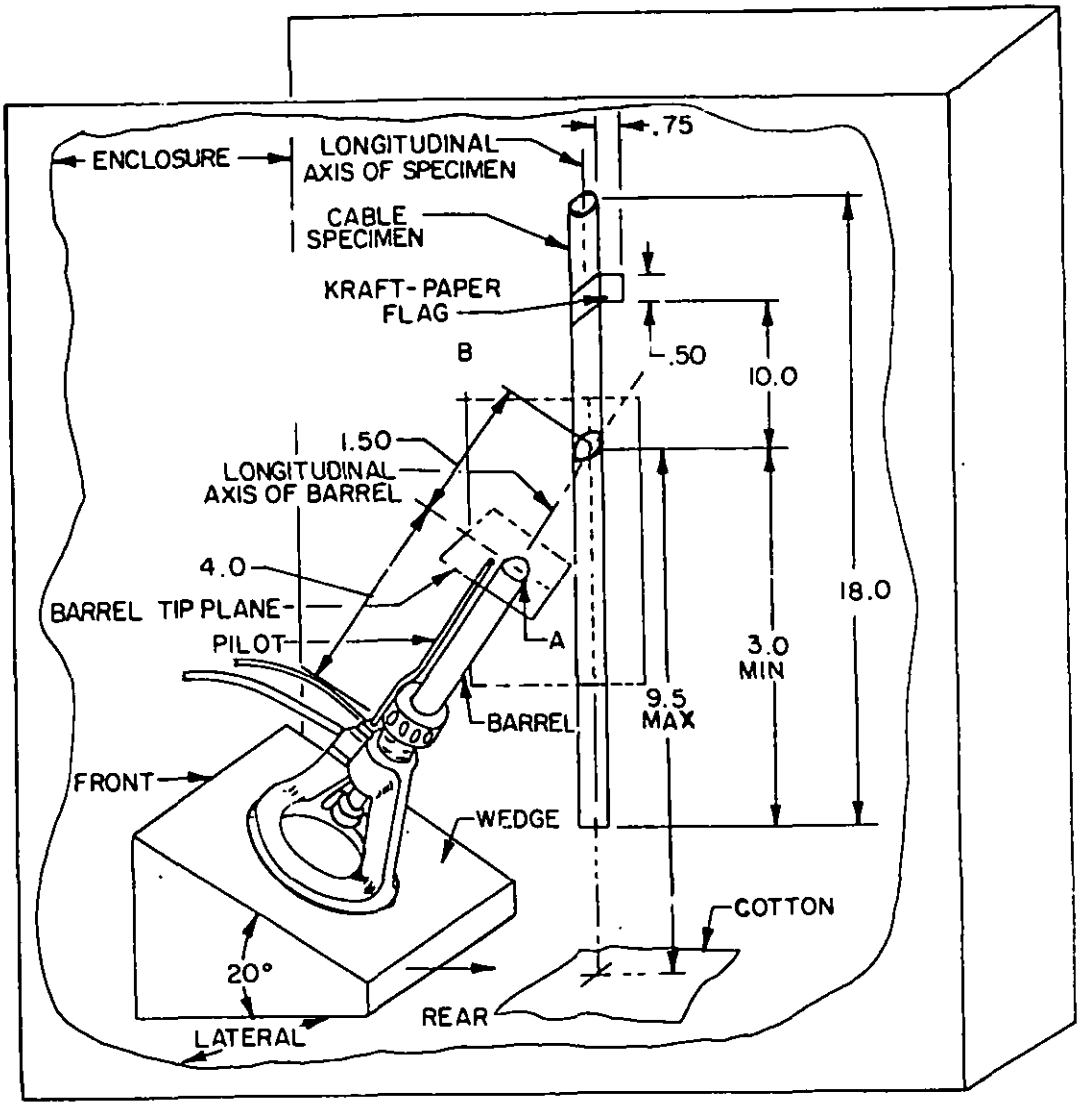

Vertical plane parallel to sides of enclosure and containing longitudinal axis of specimen and longitudinal axis of barrel.

NOTE:
1. Dimensions are in inches.
2. Metric equivalents are given for general information only.
3. Unless otherwise specified, tolerance is ±1.0 (25.4 mm).

FIGURE 1. Flammability test apparatus.

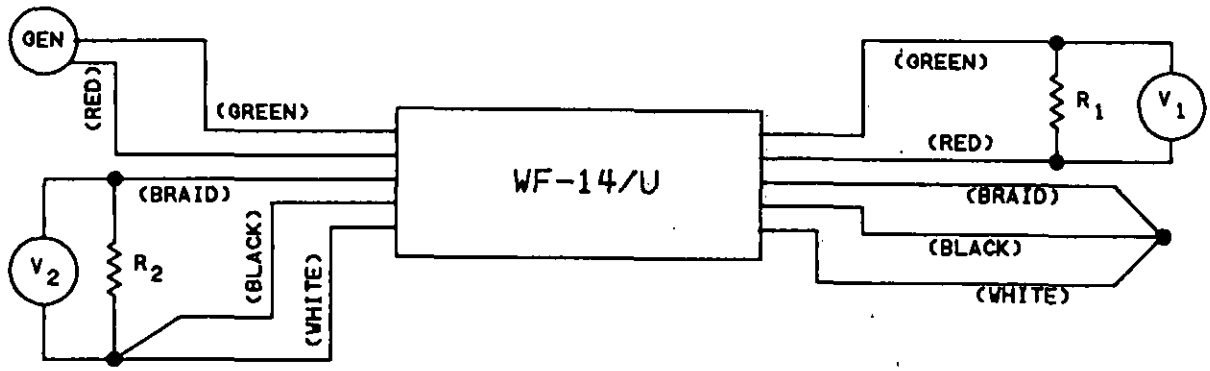

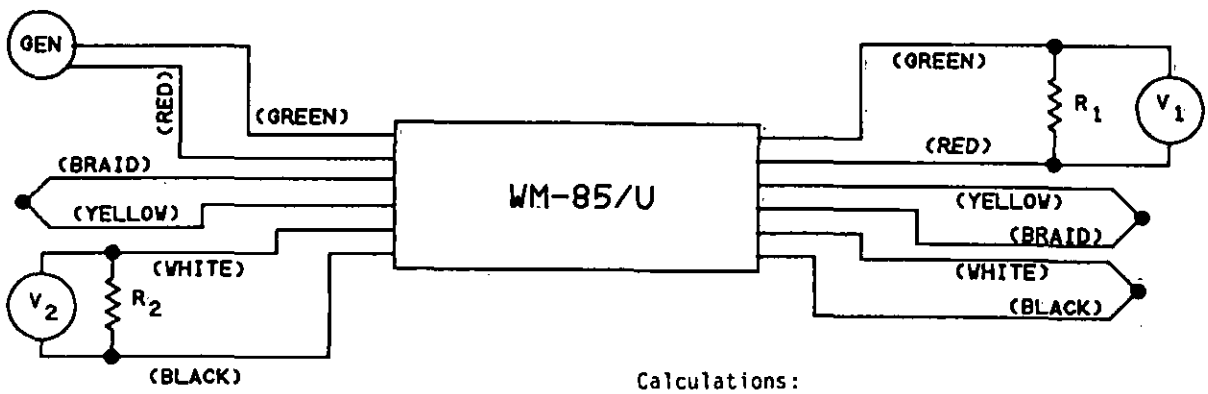

Calculations:

db - dBm reading of V_1 -dBm reading of V_2

NOTES:

1. For electrostatic isolation tests:
   $R_1 = R_2 = 1$ megohm $\pm$ 5%.
2. For electromagnetic tests:
   $R_1 = 4.5$ ohms $\pm$ 1%
   $R_2 = 1$ megohm $\pm$ 5%
3. The waveform to be sinusoidal, 15 volts rms, minimum.

FIGURE 2. Isolation tests.

5. PACKAGING

5.1 Packaging requirements. The requirements for packaging shall be in accordance with MIL-C-12000.

6. NOTES

6.1 Intended use. The cords are used to make up combination headset-microphone extension cords and microphone cords for installation in military aircraft with intercommunication sets.

a. WM-85/U is used with plug connector U-94()/U to make up combination headset-microphone extension cords with a protable microphone switch.

b. WD-34/U is used as a microphone cord with the M-3A/A, M-32()/AIC and M-33()/AIC microphones.

c. WF-5/U is used with Jack U-61/U to make up headset-microphone extension cords.

d. WM-53/U is used with Jack U-82/U to make up combination headset-microphone extension cords with a portable microphone switch.

e. WF-14/U is used with Jack U-92()/U to make up combination headset-microphone extension cords.

6.2 Ordering data. Acquisition documents should specify the following:

a. Title, number and date of this specification.

b. Type designation (see 1.2).

c. The number of first article samples.

d. Production approval activity (see 4.3).

6.3 Changes from previous issue. Asterisks are not used in this revision to identify changes with respect to the previous issue due to the extensiveness of the changes.

Custodian:
Air Force - 85

Review activity:
DLA - IS

Agent:
DLA - ES

Preparing activity:
Air Force - 85

(Project 6145-F095)

INSTRUCTIONS: In a continuing effort to make our standardization documents better, the DoD provides this form for use in submitting comments and suggestions for improvements. All users of military standardization documents are invited to provide suggestions. This form may be detached, folded along the lines indicated, taped along the loose edge *(DO NOT STAPLE)*, and mailed. In block 5, be as specific as possible about particular problem areas such as wording which required interpretation, was too rigid, restrictive, loose, ambiguous, or was incompatible, and give proposed wording changes which would alleviate the problems. Enter in block 6 any remarks not related to a specific paragraph of the document. If block 7 is filled out, an acknowledgement will be mailed to you within 30 days to let you know that your comments were received and are being considered.

NOTE: This form may not be used to request copies of documents, nor to request waivers, deviations, or clarification of specification requirements on current contracts. Comments submitted on this form do not constitute or imply authorization to waive any portion of the referenced document*(s)* or to amend contractual requirements.

(Fold along this line)

(Fold along this line)

DEPARTMENT OF THE AIR FORCE

NO POSTAGE NECESSARY IF MAILED IN THE UNITED STATES

OFFICIAL BUSINESS
PENALTY FOR PRIVATE USE $300

BUSINESS REPLY MAIL
FIRST CLASS PERMIT NO. 73236 WASHINGTON D. C.

POSTAGE WILL BE PAID BY THE DEPARTMENT OF THE AIR FORCE

Electronic Support Division
AFLC 2750 ABW/ES
Gentile AF Station
Dayton OH 45444

STANDARDIZATION DOCUMENT IMPROVEMENT PROPOSAL

(See Instructions – Reverse Side)

1. DOCUMENT NUMBER	2. DOCUMENT TITLE
3a. NAME OF SUBMITTING ORGANIZATION	4. TYPE OF ORGANIZATION *(Mark one)* ☐ VENDOR ☐ USER ☐ MANUFACTURER ☐ OTHER *(Specify)*: _____
b. ADDRESS *(Street, City, State, ZIP Code)*	

5. PROBLEM AREAS

a. Paragraph Number and Wording:

b. Recommended Wording:

c. Reason/Rationale for Recommendation:

6. REMARKS

7a. NAME OF SUBMITTER *(Last, First, MI)* – Optional	b. WORK TELEPHONE NUMBER *(Include Area Code)* – Optional
c. MAILING ADDRESS *(Street, City, State, ZIP Code)* – Optional	8. DATE OF SUBMISSION *(YYMMDD)*

DD FORM 82 MAR 1426

PREVIOUS EDITION IS OBSOLETE.