INCH-POUND

MIL-C-5809G
AMENDMENT 1
23 September 1992

MILITARY SPECIFICATION

CIRCUIT BREAKERS, TRIP-FREE, AIRCRAFT,
GENERAL SPECIFICATION FOR

This amendment forms a part of MIL-C-5809G, dated 30 November 1987, and is approved for use by all Departments and Agencies of the Department of Defense.

PAGE 4

2.1.1: Under Military Standards, delete "DOD-STD-100 Engineering Drawing Practices" and substitute "MIL-STD-100 Engineering Drawing Practices."

2.1.1: Under Military Standards, delete "MIL-STD-143 Standards and Specifications, Order of Precedence for the Selection of" and substitute "MIL-STD-970 Standards and Specifications, Order of Preference for the Selection of."

PAGE 6

3.3.5: In last line, delete "MIL-STD-143" and substitute "MIL-STD-970."

PAGE 8

3.5: In third line, delete "DOD-STD-100" and substitute "MIL-STD-100."

PAGE 23

4.7.4.3, subparagraph c, line 5: Add "1/" after jammed push button.

At bottom of page, add "1/ A jammed push button is a push button exhibiting high pullout or reset forces in excess of specification limits."

PAGE 25

4.7.7: Delete and substitute:

"4.7.7 Calibration. Single pole circuit breakers shall be subjected to calibration tests specified in 4.7.7.1 to 4.7.7.5. Each section of multipole breakers shall be subjected to the calibration current specified, with the remaining pole or poles passing no current. Multipole breakers shall also be

AMSC N/A FSC 5925

subjected to tests in which each of the poles is carrying the specified current simultaneously Minimum limit of ultimate trip (see 4.7.7.1) and maximum limit of ultimate trip (see 4 7 7 2) shall be treated as separate tests Circuit breakers shall be stabilized at room ambient while carrying no current for a minimum of one hour before proceeding to the next test "

4.7.7.5: Delete and substitute:

"4.7.7.5 Ambient effect on calibration. The circuit breaker shall be tested at the ambient temperatures and loads specified on the applicable military standard or specification sheet and shall be monitored for operation within the time limits specified. Tests shall be performed in chambers with the air flow adjusted to the still air environment specified in 4.7.7.5.1."

Add new paragraph 4.7.7 5.1:

"4 7.7.5.1 Still air environment. Still air environment is the area surrounding the circuit breakers within a given chamber where any reduction in air·velocity within the area of the circuit breakers would cause a maximum 2°C rise in temperature. The still air environment for temperature chambers 4 cubic feet and larger shall be obtained by using the fixture shown on figure 2a. Fixture dimensions are shown on figures 2b and 2c. The test fixture shall be placed in the temperature chamber so that the rear lead port of the fixture is facing away from the direct air flow created by the chamber circulating fan. A typical installation is shown on figure 2d The distance of the rear lead port from the chamber wall shall be determined by first placing a fully loaded fixture beginning at 1 inch from the chamber wall and performing the minimum limit of ultimate trip test at both extremes of temperature. The temperature rise inside the fixture shall be monitored during the test. If the internal temperature exceeds the 2°C limit, the test shall be stopped and the fixture moved away from the chamber wall in small increments until the fixture internal temperature maintains the temperature gradient of +2°C within the area of the circuit breakers. During the performance of all calibration tests, a minimum of 18 inches of lead length shall be kept inside the chamber to cancel any of the effects of heat conduction from the circuit breakers through the leads Room ambient tests shall be performed inside a temperature chamber set at 25°C. Alternate means of obtaining the still air environment must be approved by the Qualifying Activity.

For chambers that are less than 4 cubic feet in volume, the fixture dimensions stated for the chambers that are 4 cubic feet and larger can be modified and the number of circuit breakers that can be tested at one time can be reduced in order to meet the still air requirements."

After 4.7.7.5.1, insert the attached figures 2a through 2d.

PAGE 34

6: Under NOTES add: "(This section contains information of a general or explanatory nature that may be helpful, but is not mandatory.)"

6.3. In lines 13 and 14, delete "Naval Publications and Forms Center, 5801 Tabor Avenue, Philadelphia PA 19120" and substitute "DODSSP Standardization Documents Order Desk, 700 Robbins Avenue, Bldg. 4D, Philadelphia, PA 19111-5094."

Custodians:
Navy-AS
Air Force-85
Army- ER

Reviewers:
Army-AR, AT, AV, MI

Preparing Activity:
Navy-AS
(Project 5925-0234)

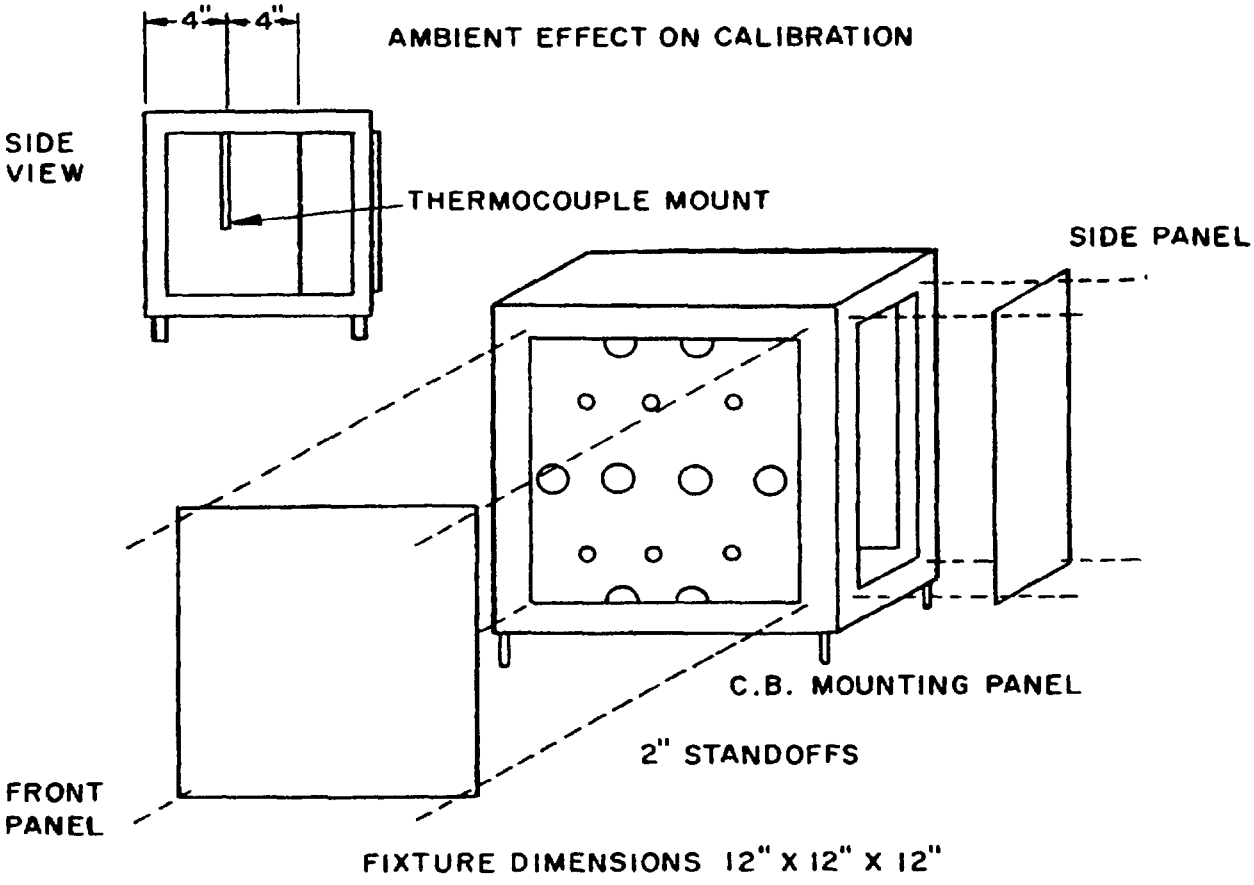

FIGURE 2a. Sample fixture.

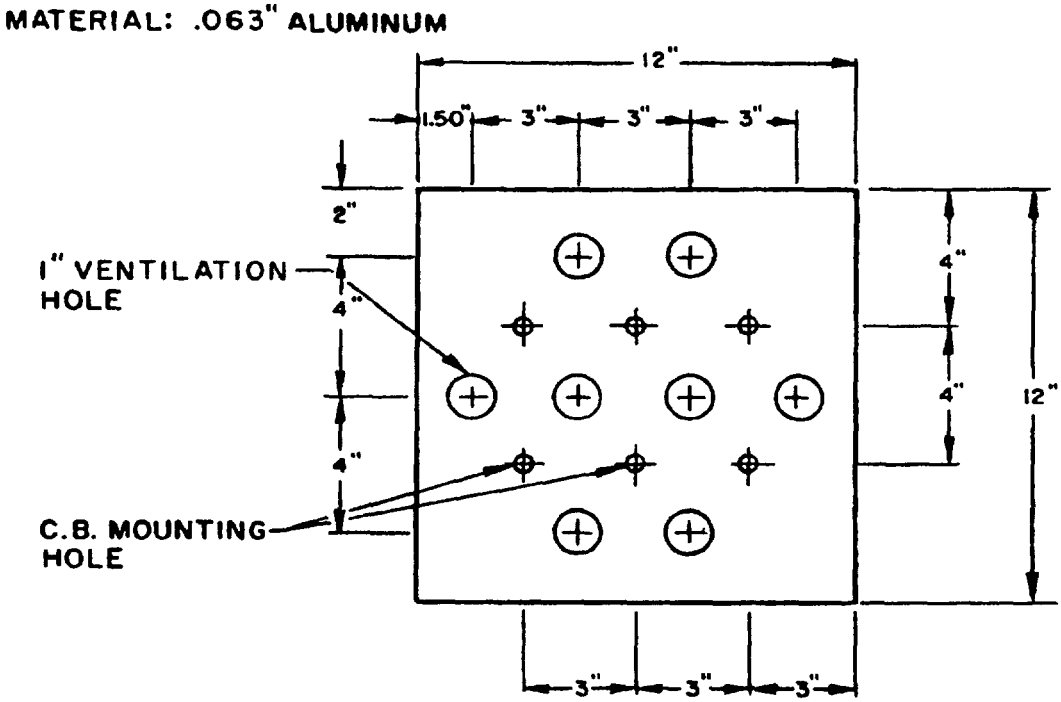

FIGURE 2b. Mounting panel.

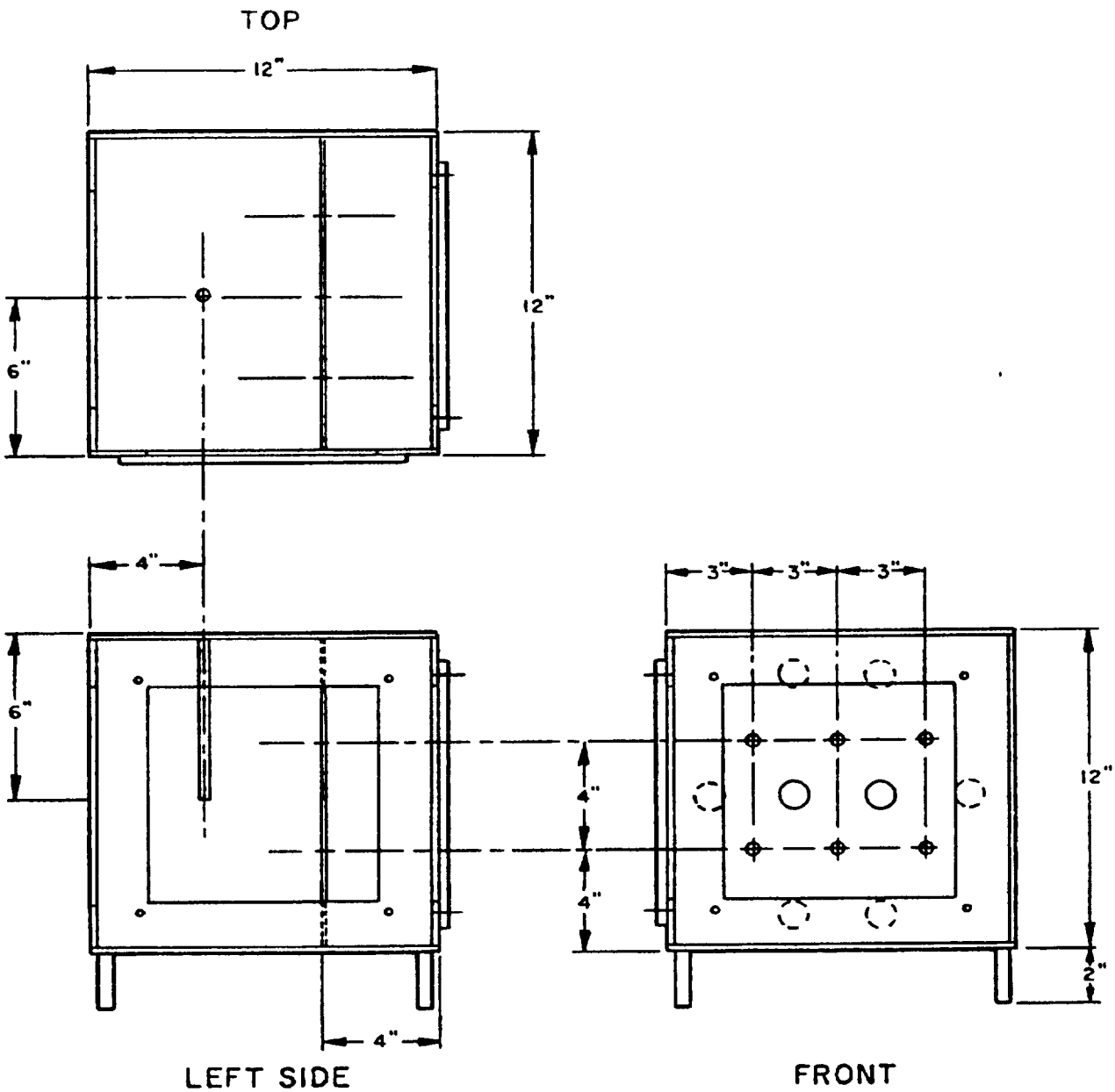

FIGURE 2c. Fixture dimensions.

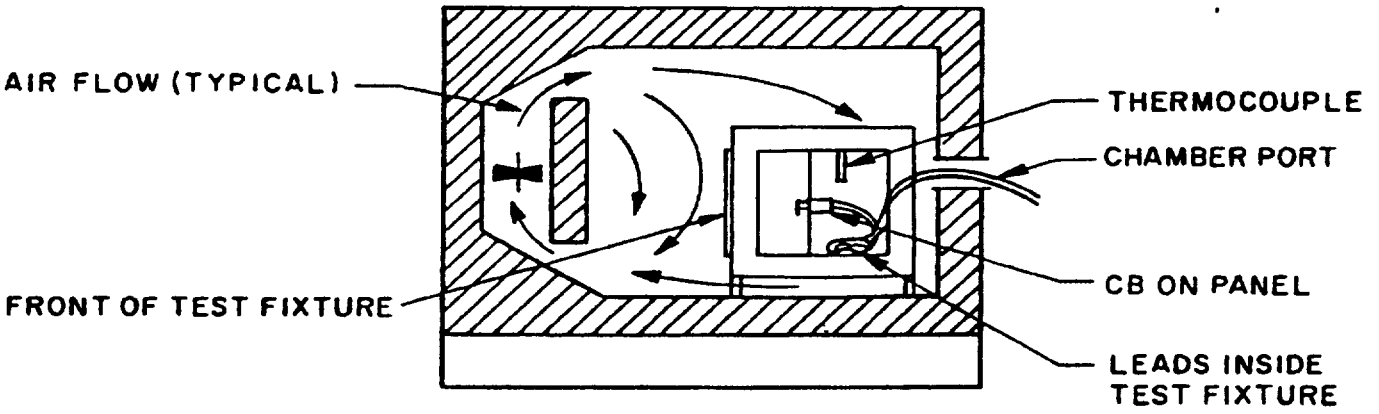

FIGURE 2d. Typical chamber installation.