Downloaded from http://www.everyspec.com

MIL-C-5537A
21 MAY 1953

Superseding
MIL-C-5537
9 January 1950

MILITARY SPECIFICATION

CELLULOSE ACETATE BUTYRATE

This specification has been approved by the Departments of the Army, the Navy, and the Air Force.

1. SCOPE

1.1 This specification covers one type and grade of cellulose acetate butyrate. In powder or pellet form, it is used in organic protective coatings.

2. APPLICABLE SPECIFICATIONS, STANDARDS, DRAWINGS, AND PUBLICATIONS

2.1 The following specifications and standard, of the issue in effect on date of invitation for bids, form a part of this specification to the extent specified herein:

SPECIFICATIONS

Federal

O-A-51	Acetone
O-A-396	Alcohol; Ethyl
TT-P-141	Paint, Varnish, Lacquer, and Related Materials; Methods of Inspection, Sampling, and Testing
TT-P-143	Paint, Varnish, Lacquer, and Related Materials; General Specification for Packaging, Packing, and Marking

STANDARDS

MIL-STD-129	Marking of Shipments

(Copies of specifications, standards, and drawings required by contractors in connection with specific procurement functions should be obtained from the procuring activity or as directed by the contracting officer.)

Downloaded from http://www.everyspec.com

3. REQUIREMENTS

3.1 Material.- Cellulose acetate butyrate shall be a product of esterification from newly prepared purified cellulose. No reworked material from other processes shall be employed.

3.2 Esterification.-

3.2.1 Acetyl content.- The acetyl content shall be between 27.0 and 32.0 percent by weight (37.7 - 44.6 percent combined acetic acid).

3.2.2 Butyral content.- The butyral content shall be between 15 and 19 percent by weight (18.6 - 23.6 percent combined butyric acid).

3.2.3 Hydroxyl content.- The free hydroxyl content shall be between 0.8 and 1.8 percent.

3.3 Acidity.- The acidity shall be less than 0.12 percent calculated as acetic acid.

3.4 Viscosity.- The viscosity of the cellulose acetate butyrate in a 20-percent solution by weight in acetone, conforming to Specification O-A-51, shall be between 10 and 16 seconds.

3.5 Bronzing properties.- A vehicle containing 10 percent of cellulose acetate butyrate and 90-percent acetone, conforming to Specification O-A-51, by weight, shall exhibit no gelation after standing for 15 hours, when used for the Bronzing test.

3.6 Stability.-

3.6.1 Boiling water.- The cellulose acetate butyrate when boiled in water for 7 hours, shall not show an increase in acidity of more than 0.10 percent calculated as acetic acid.

3.6.2 Heat.- The cellulose acetate butyrate shall not darken in spots, melt, or be any darker than a light tan, when heated at 190°C (374°F) for 1 hour.

3.7 Solubility.-

3.7.1 Ethylene dichloride.- A solution containing 12 parts of cellulose acetate butyrate to 88 parts of ethylene dichloride by weight, shall be clear and smooth after agitation for 16 hours.

3.7.2 Alcohol and acetone.- Cellulose acetate butyrate shall exhibit at least 95 percent solubility when 1/10 gram is added to a mixture of 5 ml of acetone and 3 ml of ethyl alcohol, in accordance with Specification O-A-396, and less than 70 percent solubility when 1/10 gram is added to a mixture of 5 ml of acetone and 8 ml of ethyl alcohol, at a temperature of 25°C (77°F).

3.8 Color.- A solution containing one part of cellulose acetate butyrate to four parts acetone by weight shall exhibit a color value less than a standard No. 4 Hazen solution.

3.9 Clarity.- A solution containing one part cellulose acetate butyrate to nine parts acetone by weight shall have a haze value of not more than 11.5 percent when determined as specified in Section 4.

Downloaded from http://www.everyspec.com

3.10 Moisture content.- The cellulose acetate butyrate shall contain not more than 3 percent moisture.

3.11 Workmanship.- The component ingredients shall be intimately processed, as required, in accordance with the best practice for a high-quality cellulose acetate butyrate which is stable and not subject to change in a sealed container.

4. SAMPLING, INSPECTION, AND TEST PROCEDURES

4.1 General.- All the tests required herein for the testing of cellulose acetate butyrate are classified as Inspection tests, for which necessary sampling techniques and methods of testing are specified in this section.

4.2 Test conditions.- The laboratory testing conditions shall be in accordance with Specification TT-P-141 and as described herein.

4.3 Sampling tests.-

4.3.1 Sampling.- Samples shall be selected as required by Specification TT-P-141.

4.3.2 Tests.- The following tests shall be conducted in accordance with the applicable method specified in Specification TT-P-141 and as described herein:

	Test	Method
(a)	Viscosity	427.2
(b)	Bronzing	538.1
(c)	Color	424.3

4.3.2.1 Esterification.-

4.3.2.1.1 Acetyl and butyral content.- The method shall consist of an analysis to determine the total acetyl content of the ester, isolation of a mixture of the combined acids, and a determination of the molar ratio of the acids in the mixture. From these data, the composition of the ester may be calculated by means of simultaneous equations.

4.3.2.1.1.1 Acetyl content.- A sample of cellulose acetate butyrate shall be so ground in a Wiley mill or equivalent grinder that 100 percent of the sample will pass a No. 20 sieve. Duplicate 1-gram samples shall be weighed and transferred into glass-stoppered weighing bottles, dried for 2 hours at 100° to 105°C, cooled in a desiccator, and weighed accurately. The samples shall be transferred to 250-ml Erlenmeyer flasks and the empty bottles reweighed to obtain the weight of the dry samples by difference. Forty ml of ethyl alcohol (75 percent) shall be added to each flask and the flasks immersed in

Downloaded from http://www.everyspec.com

a water bath at 50° to 60°C for 30 minutes. After adding 40 ml of 0.5N NaOH to each, the flasks shall be stoppered loosely with a rubber stopper, and immersed in the bath for 15 minutes. The flasks shall then be kept at room temperature, shaking occasionally, for 24 hours. At the end of this time, the flasks shall be rinsed with 50 to 75 ml of distilled water and 3 to 4 drops of phenolphthalein indicator added. The solution shall be titrated with 0.5N-HCL until the indicator changes color and then 5 ml 0.5N-HCL added in excess. The flasks shall be stoppered, allowed to stand for 15 minutes, occasionally shaken, and the excess titrated with 0.5N NaOH.

Calculations:
combined acetic acid (percent) =

$$\frac{(\text{ml NaOH x normality - ml HCL x normality}) \times 6.004}{\text{Weight of sample}} \qquad (1)$$

Acetyl; percent = combined acetic acid percent x 0.7167

4.3.2.1.1.2 Isolation of the mixed acids.- Duplicate 3-gram portions of sample (not especially dried nor accurately weighed) shall be weighed and 60 ml of approximately 1N NaOH added to 500 ml, round-bottom, chemically-resistant glass flasks. The flasks shall be heated in a water bath at 40°C (104°F) for 48 to 72 hours. At the end of this time, 60 ml of 1M-H_3PO_4 solution shall be added to each flask (enough to form monosodium phosphate, which liberates the organic acids from their sodium salts). The vacuum-distillation apparatus shall be assembled as shown in figure 1. The 500-ml round-bottom flask containing the sample shall be heated in a water bath and the acid solution vacuum distilled to dryness. A small stream of air bubbles should be permitted to enter to avoid bumping. The receiver shall be maintained at 0°C (32°F). Twenty-five ml of distilled water shall be added to the residue of each flask and again distilled to dryness and the distillation repeated with an additional portion of 25 ml of distilled water. The necessity of this operation to work with quantitative accuracy at all stages shall not be required, but to obtain water solutions in the same ratios as they occur in the esters shall be required. The volume of the distillate and rinsings will be 200 to 250 ml, which in the majority of cases will automatically adjust the acidity of the distillate to from 0.06 to 0.12 N (a range desired for subsequent extractions).

4.3.2.1.1.3 Determination of the molar ratios of the acids.- A 25-ml portion of the distillate of paragraph 4.3.2.1.1.2, shall be titrated with 0.1N NaOH, using phenolphthalein as the indicator. The volume of NaOH required shall be designated as "M." A 30-ml portion of the distillate with 15 ml of n - butyl acetate shall be shaken in a separatory funnel. These volumes shall be measured accurately in pipettes or burettes. The mixture shall be thoroughly shaken for 1 minute and the layers allowed to separate for 2 minutes and the (lower) aqueous layer drawn off. A pipette shall be rinsed with 2 - 3 ml of this solution, and 25 ml of solution shall be drawn and titrated against 0.1 N NaOH. The volume of NaOH required shall be designated as "M_1." The percentage distribution ratio of the acids in the distillate shall be calculated as follows:

$$K = \frac{M_1}{M} \times 100 \qquad (2)$$

In the same manner, the distribution ratios shall be determined for acetic and butyric acids. A sample of each acid shall be diluted with distilled water to give approximately 1/10 normal solution. Twenty-five ml portions shall be titrated and 30-ml portions extracted by exactly the same technique used for the mixtures. The following partition coefficients shall be thus determined:

Downloaded from http://www.everyspec.com

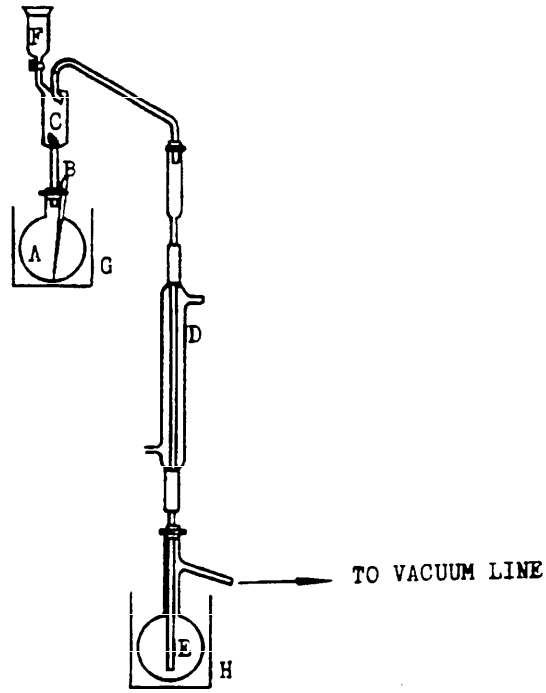

A - FLASK CONTAINING SAMPLE (500-ML, ROUND-BOTTOM)
B - CAPILLARY INLET TUBE
C - KJELDAHL DISTILLING HEAD
D - CONDENSER
E - RECEIVER (500-ML DISTILLING FLASK)
F - FUNNEL FOR ADDING WATER
G - WATER BATH FOR HEATING SAMPLE
H - COOLING BATH FOR RECEIVER

FIGURE 1. Vacuum distillation apparatus

Downloaded from http://www.everyspec.com

$$K_a = \frac{M_1}{M} \text{ (using acetic acid)}$$

$$K_b = \frac{M_1}{M} \text{ (using butyric acid)} \qquad (3)$$

wherein:

K_a = partition coefficient of acetic acid under the conditions described

K_b = partition coefficient of butyric acid under the conditions described

The constants shall be checked occasionally and shall be determined by each operator for each supply of butyl acetate. Blanks should be run on the butyl acetate, since it may develop acidity on standing, particularly if it contains a little water. All measurements shall be made with good pipettes or burettes, and extreme care and cleanliness observed during the whole operation. The accuracy of the procedure can be checked by testing an acid mixture of known composition.

The molar ratios of butyric and acetic acids in the mixed acids shall be calculated as follows:

$$B = \frac{K - 100\ Ka}{K_b - K_a} \qquad (4)$$

$$A = 100 - B$$

wherein:

A = mole percentage of acetic acid

B = mole percentage of butyric acid

K = percentage distribution ratio of the acids in the distillate

K_a = distribution ratio of acetic acid

K_b = distribution ratio of butyric acid

In order to evaluate two unknowns, two simultaneous algebraic equations involving the two unknown quantities are necessary. In the case of a binary acid mixture, the sum of the mole percentages of the acids present, represent the total acidity, or 100 percent. If A and B represents the mole percentages of acetic and butyric acid respectively:

$$A + B = 100$$

$$AK_a + BK_b = K \qquad (5)$$

The distribution ratios K_a and K_b are known and refer to the pure individual acids, whereas the distribution ratio "K" refers to the binary mixture. By solving these equations for B, the formula given for molar percentage of butyric and acetic acid may be derived.

Downloaded from http://www.everyspec.com

4.3.2.1.1.4 Calculation of acetyl and butyral content.- The percentages by weight of acetyl and butyral content shall be calculated as follows:

$$\begin{aligned} \text{percentage acetyl} &= AC \\ \text{percentage butyral} &= BC \times \frac{71}{43} \end{aligned} \qquad (6)$$

wherein:

A = mole percentage of acetic acid

B = mole percentage of butyric acid

C = percentage by weight of apparent acetyl (see paragraph 4.3.2.1.1.1)

4.3.2.1.2 Hydroxyl content.-

4.3.2.1.2.1 Reagents and apparatus.- The reagents shall consist of acetic anhydride, commercial grade (97-percent acetic anhydride) and pyridine, reagent grade (water content of 0.1 percent). A solution of 50 ml of acetic anhydride and 950 ml of the pyridine shall be prepared. If the water content of the pyridine is greater than 0.1 percent, an additional 5 ml of anhydride shall be added for each 0.1 percent of water present. The solution shall be mixed thoroughly and allowed to stand for 24 to 48 hours in an all-glass container before use. A standard alkali solution used shall be 0.5 Normal NaOH. The apparatus shall consist of an Erlenmeyer 250-ml flask connected by means of ground-glass joints to suitable reflux condensers, and electrometric titration apparatus, such as a Beckmann industrial model pH meter fitted with extension glass and calomel electrodes.

4.3.2.1.2.2 Procedure.- The sample to be tested is thoroughly dried, usually for 2 hours at 100° to 110°C (212° to 230°F), and cooled in a desiccator. One-gram samples shall be weighed out and placed in 250-ml Erlenmeyer flasks. Forty ml of the acetic anhydride-pyridine reagent shall be added to each sample and also to the flasks to serve as blanks. Since this reagent is of approximately one normal concentration, it shall be measured very accurately. The flasks shall be fitted with reflux condensers using ground-glass joints, and heated for about 24 to 48 hours at 75° to 80°C (167° to 176°F). After acetylation, the excess acetic anhydride is decomposed and the ester precipitated in a soft, fine form by use of the following technique:

Approximately 5 ml of distilled water is added through the condenser and mixed by swirling. Heating is continued for a few moments to complete the decomposition of anhydride and the flask is cooled and removed from the condenser. The condenser is then rinsed down with 100 to 150 ml of distilled water which is caught in a 600-ml beaker. The reaction dope, thinned if necessary with pyridine, is poured slowly into the water with very vigorous stirring. The precipitate must be soft, fine, and easily penetrable. If it is lumpy or hard, the determination shall be repeated.

The solution in the beaker is then titrated with 0.5 N sodium hydroxide to an endpoint preferably determined electrometrically. Alkali is added slowly and carefully with stirring until the observed pH rises to 9.0, which is taken as the endpoint. The electrometric method shall be used for all reference tests; however, for production checking a colorimetric method may be used. Colorimetric endpoints cannot be located accurately because interfering colors are formed by side reactions and are usually accurate only to ±0.2 percent. A large amount of indicator must be used to produce a color which is clearly distinguishable over these colors and in the presence of the finely divided precipitate. This introduces an error which may not be completely neutralized by the blank titration.

Downloaded from http://www.everyspec.com

4.3.2.1.2.3 Calculations.-

The results can be calculated as percent free hydroxyl by the following equation:

$$\frac{(\text{ml NaOH for blank} - \text{ml NaOH for sample}) \times \text{normality} \times 1.7}{\text{weight of sample}} = \text{percent free OH} \qquad (7)$$

4.3.2.2 Acidity.- One gram of material shall be dissolved in 100-ml neutral acetone plus 10-ml distilled water. When completely dissolved, 25 ml of water shall be added and the solution well shaken. Three drops of methyl red indicator shall be added and the solution titrated to lemon-yellow end point with 0.01 N NaOH. A blank shall be run and the ml of alkali used in the titration of the blank shall be subtracted from that used in titrating the sample.

$$\frac{\text{ml of NaOH} \times \text{normality} \times .060 \times 100}{\text{weight of sample}} = \text{percent acetic acid} \qquad (8)$$

4.3.2.3 Stability.-

4.3.2.3.1 Boiling water.- A 2-gram sample shall be placed in a clean, dry pyrex ignition test tube, 10 mm in diameter by 150 mm in length. After adding 2 ml of distilled water, the tube shall be stoppered with a clean rubber stopper which has previously been boiled thoroughly with water. The tube shall be placed in a heavy iron test tube rack equipped with a frame over the top of the tube and a thumbscrew which can be tightened to the top of the stopper. The rack shall then be placed in boiling water and heated for 7 hours. At the end of this period, the test tube shall be removed from the rack and the contents washed onto a filter paper in a funnel, using about 150 ml of boiled distilled water for this washing. The filtrates shall be titrated immediately with 0.01 N Na(OH) using phenolphthalein as the indicator. Carry a sample of the distilled water through the same filtration, titrate hot as a blank, and apply the indicated correction. The net titration shall be calculated to percent acetic acid. Subtract the original acidity from this value which will give the measure of stability of the material to boiling water,

4.3.2.3.2 Heat.- A modified German test bath shall be used with wells being only 6 inches deep, and the liquid being a diethylene glycol-water mix to give 190°C (374°F) vapor temperature. About 1 gram of the ester shall be placed in a 6- by 1/2-inch test tube. The top of the tube shall be drawn down to a capillary about 0.2 - 0.5 mm in diameter in a flame, carefully avoiding heat on the ester. The tube shall be placed in the test bath for 1 hour, removed, cooled, and the ester inspected for evidence of brownish patches, black spots, or melting. The capillary shall be heat-sealed and the test tube labeled and kept as a test record.

4.3.2.4 Solubility.-

4.3.2.4.1 Ethylene dichloride.- A mixture consisting of 200 grams of cellulose acetate butyrate in the ratio by weight of 12 parts of cellulose acetate butyrate to 88 parts of ethylene dichloride shall be placed in a 200-ml (minimum) bottle and tumble. The mixture after agitation for 16 hours shall be examined visually for clarity and smoothness.

4.3.2.4.2 Alcohol and acetone.- Tests shall be run in nine tubes (1/2 inch by 6 inches). Five ml of acetone shall be added to each of the nine tubes. To the first tube, 1 ml of ethyl alcohol (95-percent ethanol by volume) shall be added; to the second tube 2 ml; etc. One tenth of a gram of cellulose acetate butyrate shall then be added to each of the test tubes, the tubes corked with tin-foiled stoppers, and shaken for 12 hours and examined.

Downloaded from http://www.everyspec.com

4.3.2.5 Haze value.- Haze value shall be measured by means of the absorption cell and hazeometer as described below.

4.3.2.5.1 Apparatus.- The absorption cell shall be made of pyrex glass. All joints shall be fused. The inside length between faces of windows shall be [illegible] mm. The parallelism of the inside glass interfaces shall be within 0.025 mm. The flatness of the windows after fusing shall be within six wave lengths. The parallelism of the faces of each window shall be within 15 minutes. The cell shall be 41-mm outside diameter (approximately 35-mm inside diameter). It shall have an open mouth with ground glass cover and a flat bottom.

4.3.2.5.1.1 Hazeometer.- This instrument is illustrated diagrammatically in Figure 2. The light source shall consist of a 6-volt automobile type bulb mounted in front of a reflector. It shall be placed within a cylindrical shield, the inside of which is blackened. The base of the cylindrical shield opposite the reflector shall be closed and equipped with a 1-inch circular aperture. A circular blackened disk containing a similar aperture shall be mounted in front of a photoelectric cell 18 inches from the first aperture. The photoelectric cell shall be the Weston phototronic cell, type I with Viscor filter. The cell shall be connected to an ammeter with a 100-microampere range and an internal resistance of 50 ohms. The light source unit and the photoelectric cell unit shall be mounted in a suitable box finished on the inside in dull black to reduce reflection to a minimum. If the apparatus is not set up in a dark room, then the box lid, also finished in dull black on the inside, shall fit tightly to prevent any external light from reaching the photoelectric cell, and the lid shall be closed when making measurements. A 6- or 8-volt storage battery shall be used to operate the lamp. The intensity of the lamp shall be adjustable by means of a rheostat. The battery and meter need not be attached to the box containing the other elements of the hazeometer.

4.3.2.5.2 Procedure.- The solution is prepared by adding the cellulose acetate butyrate to the acetone and shaking for at least 2 hours on a mechanical shaker. The haze measurement shall be made after removal of the solution from the shaking machine. The solution is poured into the absorption cell and measured within 20 minutes. Air bubbles shall not be present. The intensity of the lamp of the hazeometer shall be so adjusted that a current of 100 microamperes is obtained from the photoelectric cell with no solution in the hazeometer. The absorption cell containing the solution shall be so placed against the lamp shield aperture (aperture B, figure 2) that all the light from the lamp shall pass through the solution. The lamp shield apertures should be covered with 1/4-inch thick felt washers in order that the window cannot be scratched on the shield. Only that portion of the light which has not been caused to deviate from its path by passage through the absorption cell will enter the photoelectric cell aperture (aperture A, figure 2). The haze value is the percentage of the total light transmitted at position aperture A which is scattered when the absorption cell is placed at position aperture B. It is calculated as follows:

$$\text{haze value} = \frac{(a-b) \times 100}{a} \qquad (9)$$

where "a" and "b" represent readings obtained with the absorption cell in positions aperture A and aperture B, respectively. "A" and "b" shall be averages of six or more readings. One-half of the readings shall be made with one window of the absorption cell facing the photoelectric cell, and the other half shall be made with the opposite window facing the photoelectric cell.

4.3.2.6 Moisture.- Five grams of the sample shall be accurately weighed into a tared dish (fitted with a lid) and dried in an oven for 2 hours at 100° to 105°C (212° to 221°F). The dish shall be removed from the oven, covered and cooled in a desiccator, and weighed, and the moisture loss calculated.

Downloaded from http://www.everyspec.com

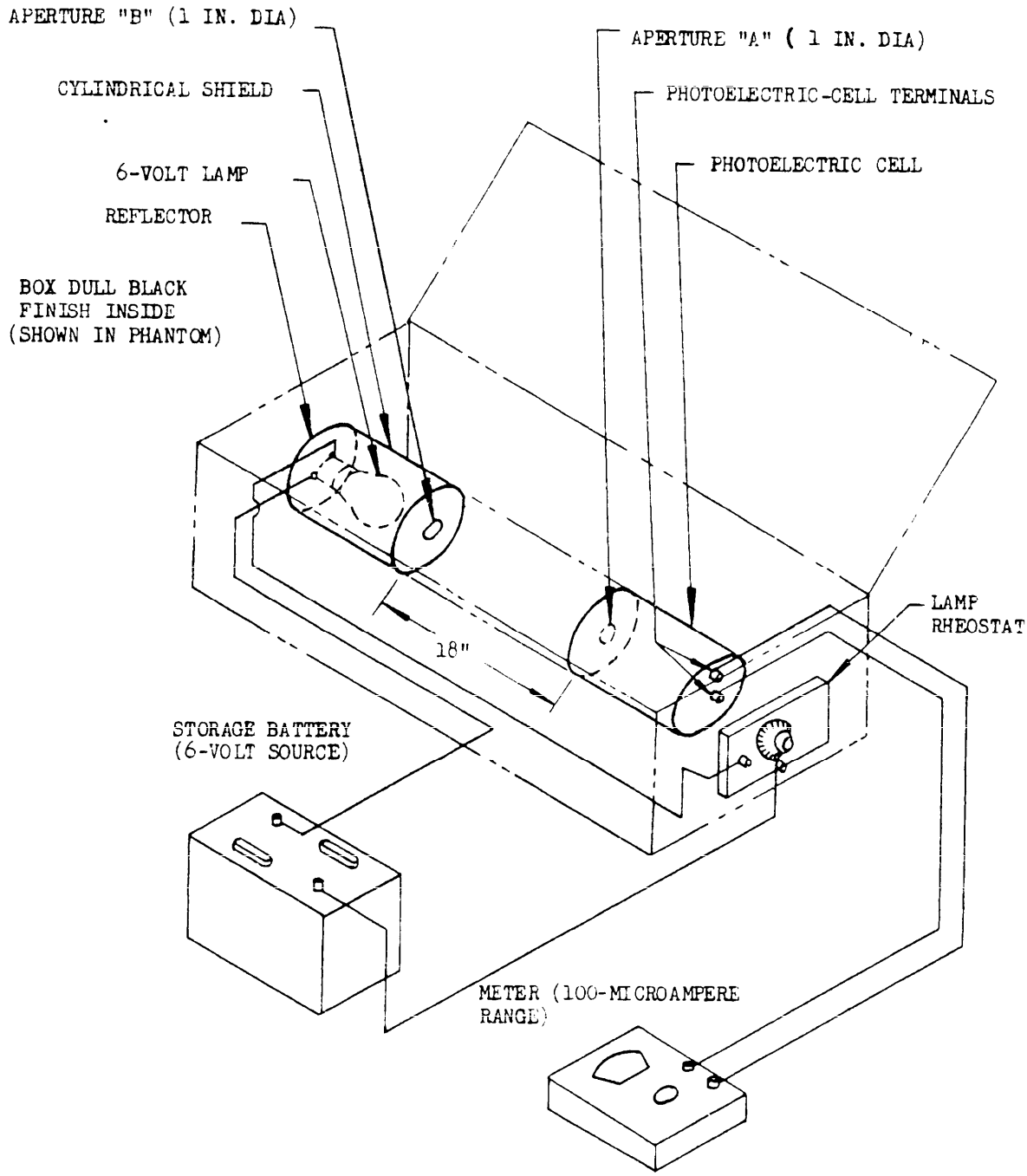

FIGURE 2. Hazeometer (Diagrammatic)

Downloaded from http://www.everyspec.com

4.3.3 Rejection and retest.- Material which has been rejected may be reworked or replaced to correct the defects, and resubmitted for acceptance. Before resubmitting, full particulars concerning previous rejection and the action taken to correct the defects found in the original shall be furnished the Government Inspector. Material rejected after retest shall not be resubmitted without the specific approval of the procuring activity.

5. PREPARATION FOR DELIVERY

5.1 Application.- The requirements specified herein apply only to direct purchases by or direct shipments to the Government.

5.2 Packaging and packing.- The packaging and packing for shipment shall be in accordance with Specification TT-P-143.

5.3 Marking of shipments.- Interior packages and shipping containers shall be marked in accordance with Standard MIL-STD-129. The nomenclature shall be as follows:

Cellulose Acetate Butyrate, Specification MIL-C-5537A

6. NOTES

6.1 Intended use.- Cellulose acetate butyrate covered by this specification is intended for use in the manufacture of organic protective coatings used on aircraft.

6.2 Ordering data.- Requisitions, contracts, and orders shall state the size of the containers in which the cellulose acetate butyrate is to be furnished and whether overseas packing is required (see Section 5). The material shall be purchased on a dry basis, the unit being 1 pound.

6.3 Superseding data.- This specification supersedes Specification MIL-C-5537 which was the number assigned by cover sheet to Specification AN-C-89.

NOTICE: When Government drawings, specifications, or other data are used for any purpose other than in connection with a definitely related Government procurement operation, the United States Government thereby incurs no responsibility nor any obligation whatsoever; and the fact that the Government may have formulated, furnished, or in any way supplied the said drawings, specifications, or other data, is not to be regarded by implication or otherwise as in any manner licensing the holder or any other person or corporation, or conveying any rights or permission to manufacture, use, or sell any patented invention that may in any way be related thereto.

Custodians:
Army - Ordnance Corps
Navy - Bureau of Aeronautics
Air Force

Other interest:
Army - CMQ
Navy - Y

Downloaded from http://www.everyspec.com

SPECIFICATION ANALYSIS SHEET

Form Approved
Budget Bureau No. 119-R004

INSTRUCTIONS

This sheet is to be filled out by personnel either Government or contractor, involved in the use of the specification in procurement of products for ultimate use by the Department of Defense. This sheet is provided for obtaining information on the use of this specification which will insure that suitable products can be procured with a minimum amount of delay and at the least cost. Comments and the return of this form will be appreciated. Fold on lines on reverse side, staple in corner, and send to preparing activity *(as indicated on reverse hereof)*.

SPECIFICATION

ORGANIZATION *(Of submitter)*	CITY AND STATE

CONTRACT NO.	QUANTITY OF ITEMS PROCURED	DOLLAR AMOUNT
		$

MATERIAL PROCURED UNDER A

☐ DIRECT GOVERNMENT CONTRACT ☐ SUBCONTRACT

1. HAS ANY PART OF THE SPECIFICATION CREATED PROBLEMS OR REQUIRED INTERPRETATION IN PROCUREMENT USE?

A. GIVE PARAGRAPH NUMBER AND WORDING.

B. RECOMMENDATIONS FOR CORRECTING THE DEFICIENCIES.

2. COMMENTS ON ANY SPECIFICATION REQUIREMENT CONSIDERED TOO RIGID

3. IS THE SPECIFICATION RESTRICTIVE?

☐ YES ☐ NO IF "YES", IN WHAT WAY?

4. REMARKS *(Attach any pertinent data which may be of use in improving this specification. If there are additional papers, attach to form and place both in an envelope addressed to preparing activity)*

SUBMITTED BY *(Printed or typed name and activity)*	DATE

DD FORM 1 APR 63 1426 REPLACES NAVSHIPS FORM 4863, WHICH IS OBSOLETE PLATE NO. 15419

Downloaded from http://www.everyspec.com

FOLD

DEPARTMENT OF THE NAVY

POSTAGE AND FEES PAI
NAVY DEPARTMENT

OFFICIAL BUSINESS

CHIEF, BUREAU OF NAVAL WEAPONS
ENGINEERING DIVISION
ATTN: CODE RREN-5
DEPARTMENT OF THE NAVY
WASHINGTON, D.C. 20360

FOLD