Downloaded from http://www.everyspec.com

MIL-C-43368E(GL)
28 June 1985
SUPERSEEDING
MIL-C-43368D(GL)
30 June 1982

MILITARY SPECIFICATION

COATS MEN'S, TROPICAL AND SERGE, POLYESTER/WOOL, ARMY GREEN 344

This specification is approved for use by Natick Research and Development Center, Department of the Army, and is available for use by all Departments and Agencies of the Department of Defense.

1. SCOPE

1.1 Scope. This document covers a polyester/wool tropical worsted, wool serge, and polyester and wool serge coat.

1.2 Classification. The coat shall be of the following types, classes, and sizes as specified (see 6.2).

Type:

Type I - Polyester/Wool Tropical, Army Green 344, 10.0 ounce.
Type III - Polyester and Wool Serge, Army Green 344, 11.3 ounce.

Class:

Class 1 - General Officers.
Class 2 - Other Officers and Warrant Officers.
Class 3 - Enlisted Men.

Beneficial comments (recommendations, additions, deletions) and any pertinent data which may be of use in improving this document should be addressed to: U.S. Army Natick Research and Development Center, Natick, MA 01760-5014 by using the self-addressed Standardization Document Improvement Proposal (DD Form 1426) appearing at the end of this document or by letter.

FSC 8405

DISTRIBUTION STATEMENT A. Approved for public release; distribution is unlimited.

Downloaded from http://www.everyspec.com

Schedule of Sizes (Chest)

Extra short	Short	Regular	Long	Extra long
		30		
		31		
	32	32		
	33	33	33	
34	34	34	34	
35	35	35	35	
36	36	36	36	36
37	37	37	37	37
38	38	38	38	38
39	39	39	39	39
40	40	40	40	40
41	41	41	41	41
42	42	42	42	42
43	43	43	43	43
	44	44	44	44
	46	46	46	46
	48	48	48	48
	50	50	50	

1.3 Uniform. When coat specified in this document and trousers specified in MIL-T-43957 are procured as a uniform, the coat and trousers shall be cut from the same roll of material, the shades shall match and the uniform shall conform to the type and class as follows (see 6.2 and 6.5):

Coat	Trousers
Type I	Class 3
Type III	Class 6

2. APPLICABLE DOCUMENTS

2.1 Government documents. Unless otherwise specified, the following documents of the issue in effect on date of invitation for bids or request for proposal, form a part of this document to the extent specified herein.

SPECIFICATIONS

FEDERAL

V-T-280 - Thread, Gimp, Cotton, Buttonhole
V-T-295 - Thread, Nylon
V-T-301 - Thread, Silk

Downloaded from http://www.everyspec.com

CCC-C-438 - Cloth, Buckram, Woven and Nonwoven
DDD-L-20 - Label: For Clothing, Equipage, and Tentage (General Use)
DDD-T-86 - Tape, Textile; Cotton, General Purpose (Unbleached, Bleached, or Dyed)
PPP-B-636 - Boxes, Shipping, Fiberboard
PPP-T-45 - Tape, Gummed, Paper, Reinforced and Plain, for Sealing and Securing

MILITARY

MIL-C-297 - Cloth, Interlining, Cotton Warp, and Spun Hair-Wool or Rayon Filling
MIL-C-368 - Cloth, Satin, Rayon and Cloth, Twill, Rayon
MIL-B-371 - Braid, Textile, Tubular
MIL-B-593 Braid, Textile (Flat)
MIL-C-823 - Cloth, Serge; Wool, Wool and Nylon, Polyester and Wool
MIL-B-3461 - Button, Insignia, Metal, Uniform and Cap
MIL-C-15062 - Cloth, Flannel, Wool, Undercollar Cloth
MIL-P-15064 - Pads, Shoulder and Sleeve-Head
MIL-C-15065 - Coat Fronts
MIL-C-16375 - Cloth, Wigan, Cotton
MIL-C-21115 - Cloth, Tropical: Wool, Polyester/Wool
MIL-C-29137 - Cloth, Felt Fabric Composite, Undercollar
MIL-T-43548 - Thread, Polyester, Cotton-Covered and Rayon Covered
MIL-C-43718 - Cloth, Twill, Polyester; Polyester and Cotton; Polyester and Rayon
MIL-T-43957 - Trouser's Men's, Dress, Wool and Polyester/Wool
MIL-C-44121 - Cloth, Twill, Polyester

STANDARDS

FEDERAL

FED-STD-751 - Stitches, Seams, and Stitching

MILITARY

MIL-STD-129 - Marking for Shipment and Storage
MIL-STD-147 - Palletized Unit Loads
MIL-STD-1490 - Provisions for Evaluating Quality of Coats, Men's, Dress

(Copies of documents required by manufacturers in connection with specific acquisition functions should be obtained from the contracting activity or as directed by the contracting officer.)

Downloaded from http://www.everyspec.com

2.2 Other publications. Unless otherwise specified, the following documents of the issue in effect on date of invitation for bids or request for proposal, form a part of this document to the extent specified herein.

AMERICAN SOCIETY FOR TESTING AND MATERIALS (ASTM)

D 3951 - Standard Practice for Commercial Packaging

(Application for copies should be addressed to the American Society for Testing and Materials, 1916 Race Street, Philadelphia, PA 19103.)

(Technical society and technical association documents are generally available for reference from libraries. They are also distributed among technical groups and using Federal agencies.)

3. REQUIREMENTS

3.1 Guide sample. Samples, when furnished, are solely for guidance and information to the contractor (see 6.3). Variation from the document may appear in the sample, in which case the document shall govern.

3.2 Material (see 6.6).

3.2.1 Type I coat. The basic material shall be polyester and wool serge, Army Green 344, conforming to type III, class 3 of MIL-C-21115.

3.2.1.1 Type III coat. The basic material shall be polyester and wool serge, Army Green 344, conforming to type III, class 3 of MIL-C-823.

3.2.2 Lining. The material for lining fronts, sleeves, yoke, back vent, and facings for inside right breast pocket and as an option for pocket flaps and lower pocket facings shall be rayon lining, 3.7 ounces per square yard, Army Green 45, conforming to class 1 of MIL-C-368. As an alternate, the lining material may be a polyester twill cloth, Army Green 461, conforming to MIL-C-44121.

3.2.3 Binding. The binding for the coat shall be bias cut rayon, Army Green 45, 5/8 to 7/8 inch, and shall be made of the same material as the coat lining (see 3.2.2).

3.2.4 Collar interlining. The material for the collar interlining shall be cotton buckram cloth, natural or bleached, conforming to type I, class 2 of CCC-C-438.

3.2.5 Interlinings for coat fronts. The coat front interlinings shall conform to type I of MIL-C-15065.

Downloaded from http://www.everyspec.com

3.2.6 Twill cloth. The material for inside breast pocket, lower hanging pockets, armholes, shoulder, and pocket stays shall be polyester and cotton, or polyester and rayon matching the shade of the basic material or dyed black, conforming to class 1 of MIL-C-43718 except that the nonfibrous material content and colorfastness requirements for perspiration and crocking shall not apply.

3.2.7 Shoulder loop interlining. The material for the shoulder loop interlining shall be cotton warp and hair-wool filling interlining cloth conforming to type III, class 1 or 2 of MIL-C-297.

3.2.8 Undercollar material. The material shall be wool flannel cloth, Army Green 48, conforming to MIL-C-15062 except that the colorfastness requirements for perspiration and crocking shall not apply. As an alternate, the material may be a wool blend felt-fabric composite, Army Green 48, conforming to MIL-C-29137.

3.2.9 Wigan for sleeve bottoms. The interlining for sleeve bottoms shall be cotton wigan cloth, natural color, conforming to type I of MIL-C-16375.

3.2.10 Labels. Each coat shall have a combination size-identification label, a size label, and instruction label and a cardboard instruction folder. All labels, except for the instruction folder, shall conform to DDD-L-20, and shall show fastness to dry cleaning.

3.2.10.1 Combination size-identification label. The combination label shall conform to type VI, classes 1 And 2 combined.

3.2.10.2 Size label. The size label shall conform to type VI, class 2.

3.2.10.3 Instruction label. The instruction label shall conform to type VI , class 3. The letters for the caption shall be not less than 3/16 inch in height and all other lettering shall be not less than 1/8 inch in height. The contents of the label shall be as follows:

COAT, MEN'S, ARMY GREEN

1. Dry clean only.
2. Remove wrinkles or gloss with a steam iron or with a hot iron using a damp press cloth.
3. Roll press sleeves and lapels.

3.2.10.4 Uniform size tickets. When coats and trousers are procured as a uniform, a size ticket made of suitable commercial cardboard and measuring not less than 2-1/8 by 1-1/4 inches shall be included with both the coat and trousers. The corners may be double perforated for tacking. The ticket shall be legibly printed with the following information, for example:

Downloaded from http://www.everyspec.com

UNIFORM, MEN'S, ARMY GREEN

Coat - 38 Regular
Trousers - 32 Regular
Army Green 344

The item description shall be printed in letters and numerals not less than 1/8 inch in height. The shade number shall be printed in letters and numerals not less than 1/16 inch in height. The nomenclature, Coat and Trousers, together with the adjective size shall be in letters not less than 1/8 inch in height and may be abbreviated. The size shall be printed in numerals not less than 1/4 inch in height. The coat size ticket shall be tacked on the outside of waistband above the right hip pocket between the belt loops. The tickets shall be machine or hand tacked on four corners with two or three stitches to each hole.

3.2.10.5 Cardboard instruction folder. The printed cardboard instruction folder of commercial type shall be attached by a string 12 inches in length, looped through a hole 1/4 inch in diameter and attached to the right breast pocket flap button. The cardboard folders shall measure 4 ± 1/4 inches by 6 ± 1/4 inches by 3 ± 1/8 inches. The text of the instruction folder shall be as shown on figure 3. The letters for the instructions shall be not less than 1/8 inch in height.

3.2.11 Shoulder pads. The shoulder pads shall conform to the requirements of type I, class 1 of MIL-P-15064.

3.2.12 Sleeve-head pads. The sleeve-head pad shall conform to the requirements of type IV of MIL-P-15064.

3.2.13 Stay tapes. The tapes for bridle at breakline of coat and for staying armhole shall be cotton, preshrunk, conforming to type I, class 1 or 2 of DDD-T-86 in the following widths, except that the nonfibrous material content shall not apply:

5/8 inch for bridle at breakline of coat
1/4 inch for staying armhole

The 5/8 inch bridle tape may be dyed black, conforming to class 3 and shall show fastness to wet-drycleaning. In the event a standard sample has not been established, the dyed tape shall show an adjective fastness rating of "good". The tape for staying the front edges of the coat shall be cross-cut, 1/2 inch wide, made from natural, or dyed black polyester and cotton or rayon cloth conforming to class 1 of MIL-C-43718, except that the nonfibrous material content shall not apply. The raw edges of the tape shall be treated with a synthetic resin to prevent raveling.

Downloaded from http://www.everyspec.com

3.2.14 Braid.

3.2.14.1 Hanger braid. The braid for coat hanger shall be cotton or rayon tubular braid, flat, 1/8 to 3/16 inch wide, Army Green 44, conforming to type IX, class 1 of MIL-B-371.

3.2.14.2 Sleeve braid (class 1 and 2 coats). The sleeve braids shall be flat mohair or cotton braid Army Black 194, conforming to type I, class 3 or type III, class 2 of MIL-B-593 in the following widths, except that the colorfastness requirement to perspiration shall not apply:

Class 1 coat - 1-1/2 inch wide
Class 2 coat - 3/4 inch wide

3.2.15 Thread.

3.2.15.1 Thread, polyester, cotton-covered and rayon covered. The cotton-covered and rayon covered polyester thread shall conform to MIL-T-43548 in the sizes and manufacturing uses as follows:

Use	Ticket	Ply
Seaming and stitching of coat	30, 50, 70	2 or 3
Overedging	70	2 or 3
Blindstitching, and machine felling (except when the use of silk or alternate nylon is indicated in table I)	70	2 or 3
Button sewing, hand	30	2 or 3
Button sewing, machine (except automatic sew and shank type (see 3.2.15.2))	30	2 or 3
Braid stitching (class 1 and 2 coats only)	50 (black)	2 or 3
Tacking armhole and attaching sleevehead and pads	30 (white)	2 or 3

3.2.15.2 Automatic button sewing. If an automatic machine which sews and shanks (wraps) the buttons in one operation is used, the thread shall be waxed nylon monocord special No. 5, having a minimum breaking strength of 16 pounds

Downloaded from http://www.everyspec.com

and a minimum length per unit weight of 2150 yards per pound and shall be tested for these requirements and for colorfastness (see 3.2.16.1) in accordance with the test methods as specified in V-T-295.

3.2.15.3 Thread, silk. The silk thread shall conform to V-T-301 in the types, sizes, classes and manufacturing uses as follows, except the requirements prohibiting weighting and loading materials shall not apply for type III thread.

Use	Type	Size	Class
Machine-made buttonholes	I	B and C	--
Hand tailored buttonholes	II	10	1,Subclass A or B
Hand felling	III	A or C	--
Machine type felling	III	A	--
Outside trim stitching	I	O	--

3.2.15.4 Thread, nylon. Nylon thread may be used as an alternate to silk thread as indicated in 3.5.3 and table I. The nylon thread shall conform to the following types and sizes of V-T-295 (see 6.4).

Use	Type	Size	Class
Hand or machine type felling	IV	A and C	A
Making buttonholes and bartacks	V	10	A
Machine stitching	VI	B, F and O	A

3.2.15.5 Thread, basting. The thread for basting shall be a good commercial grade bleached or unbleached cotton thread. As an alternate, the cotton-covered polyester thread used for seaming and stitching may be used for basting.

3.2.15.6 Color. The color of the cotton-covered or rayon covered polyester, silk, and nylon threads shall be Army Green E, C.A. 66034 except that the thread for stitching the sleeve braid shall be black AA, C.A. 66043, and the thread for tacking the armholes and attaching sleeve-head and pads shall be white.

Downloaded from http://www.everyspec.com

3.2.15.6.1 Colorfastness. All dyed threads shall show colorfastness to light and wet drycleaning, equal to or better than the standard sample. When no standard is available, the dyed thread shall show "good" fastness to light and wet drycleaning.

3.2.16 Gimp. The gimp for reinforcing the buttonholes shall be cotton size No. 8 conforming to type I or II of V-T-280.

3.2.16.1 Color and colorfastness. The color of the gimp thread shall be Army Green E, C.A. 66034. The dyed gimp shall show colorfastness to wet dry cleaning, equal to or better than the standard sample. When no standard sample is available, the dyed gimp shall show "good" fastness to wet dry cleaning.

3.2.17 Buttons, uniform. The buttons for the front shall be 36 line, hopper back; and for the pockets and shoulder loops shall be 25-line, hopper back, conforming to type I, style 2 of MIL-B-3461, class A or B for class 1, 2 and 3 coats.

3.2.17.1 Toggles (optional). Split or ring type toggles, when used to fasten buttons to the breast pocket flaps and lower pocket flaps, shall conform to MIL-B-3461.

3.2.18 Fasteners. The snap fasteners for the breast patch pockets and flaps shall be rounded or square rolled-edge (sew-on type) size 0 or 00 brass black commercial finish.

3.3 Design. The design is a four-button single breasted coat with notched collar and peak lapels, front and underarm darts, two-pieced back with vent, two top pleated patch pockets with flaps, two lower inside hanging pockets with flaps, and shoulder loops to button. Inside of coat is 3/8-lined with yoke back, fully lined sleeves and one inside breast pocket (see figure 1).

3.4 Patterns. Standard patterns to be used for cutting the contractor's working patterns will be furnished by the Government. The working patterns shall be identical to the standard patterns and shall not be altered in any way. The patterns provide seam allowance as follows:

1/4 inch	-	For lapel and front edge seams, points of shoulder loops, and joining pocket flaps to coat
5/16 inch	-	For armholes, darts, and shoulder seams
3/8 inch	-	For all other seams and lining seams, unless otherwise indicated
5/8 inch	-	For side and back center seams
2-1/4 inch	-	For the coat sleeve bottom turn up
1-3/4 inch	-	For the lining sleeve bottom turn up

Downloaded from http://www.everyspec.com

3.4.1 List of pattern parts. The component parts of the coat shall be cut from materials as specified according to the pattern parts indicated:

Material	Pattern nomenclature	Cut parts
Basic material (see 3.2.1 or 3.2.1.1)	Front	2
	Back	2
	Right front facing	1
	Left front facing	1
	Top collar (conventional and alternate construction)	1
	Top sleeve	2
	Under sleeve	2
	Shoulder loop	2
	Breast pocket	2
	Breast pocket flap	2
	Lower pocket flap	2
	Lower pocket cord	2
	Lower pocket top and bottom pipings	2 each
	Breast pocket flap lining	2 1/
	Lower pocket flap lining	2
	Armhole shield (one piece)	2
Cloth, rayon lining	Front	2
	Back yoke	1
	Top sleeve	2
	Under sleeve	2
	Lower pocket facing	2 2/
	Inside breast pocket piping	1
	Back vent lining	1
Cloth, twill, polyester and cotton or polyester and rayon	Lower pocket	2
	Inside breast pocket	1
	Lower pocket stay	2
	Inside breast pocket stay	1
	Flap and breast pocket stay	2
Cloth, cotton warp, hair-wool filling	Shoulder loop interlining	2
Cloth, cotton, wigan	Sleeve interlining	2
Cloth, cotton, buckram	Collar interlining	2 3/

Downloaded from http://www.everyspec.com

Material	Pattern nomenclature	Cut parts
Cloth, wool, flannel or felt-fabric composite	Undercollar	2 4/
	Undercollar	1
Templates	Front (right and left) shaper	-
	Left facing shaper	-
	Lapel shaper	-
	Finished lapel and collar shaper	-
	Undercollar shaper (conventional wool flannel cloth)	-
	Undercollar shaper (alternate felt-fabric composite)	-
	Top collar marker (conventional undercollar construction)	-
	Top collar marker (alternate undercollar construction)	-
	Undercollar stand shaper (conventional wool flannel cloth	-
	Undercollar stand shaper (alternate felt-fabric composite)	-
	Shoulder loop shaper	-
	Breast patch pocket shaper	-
	Breast patch pocket flap shaper	-
	Breast patch pocket pleat shaper	-
	Lower pocket flap shaper	-
	Gorge shaper	-
	Bottom shaper	-

1/ Breast flap lining and lower flap lining may be cut of rayon lining in place of the basic material.

2/ The pocket facings may be cut of basic material in place of the rayon lining.

3/ The collar interlining may be cut in one piece with center seam allowances omitted.

4/ The undercollar may be cut in one piece with center seam allowances omitted.

3.5 Construction.

Downloaded from http://www.everyspec.com

3.5.1 Stitches, seams and stitching. Stitch, seam, stitching types and stitches per inch specified in table I, shall conform to FED-STD-751. Where two or more seam or stitch types are given for the same part of an operation, any one of then may be used. Seam allowances shall be maintained with seams sewn so that no raw edges, run-offs, twists, pleates, puckers, or open seams will result.

3.5.1.1 Type 301 and 306 stitching. Ends of stitching shall be backstitched or overstitched not less than 1/4 inch except where ends are caught in other seams or stitching. ends of a continuous line of stitching (except label) shall be overlapped not less than 1/2 inch. The ends of the label (type VI) and hand stitching shall be overlapped not less than three stitches. Thread tensions shall be maintained so that there will be no loose stitching resulting in loose bobbin or needle thread or excessively tight stitching resulting in puckering of the materials sewn. The lock shall be imbedded in the materials sewn.

3.5.1.1.1 Repairs of type 301 and 306 stitching. Repairs or types 301 and 306 stitching shall be as follows:

a. When thread breaks or bobbin run-outs occur during stitching, the stitching shall be reported by restarting the stitching a minimum of 1/2 inch back of the end of the stitching. 1/

b. Thread breaks, or two or more consecutive skipped or run-off stitches noted during inspection of the item shall be repaired by overstitching. The stitching shall start a minimum of 1/2 inch in back of the defective area, continue over the defective area a minimum of 1/2 inch beyond the defective area onto the existing stitching. Loose or excessively tight stitching shall be repaired by removing the defective stitching without damaging the materials and restitching in the required manner. 1/

1/ When making the above repairs, the ends of the stitching are not required to be backstitched.

3.5.1.2 Type 401, 502, 503 and 504 stitching. Thread tension shall be maintained so that there will be no loose stitching. Where 401 stitch type is used the looper (underthread) shall be on the inside. All repairs shall be in accordance with 3.5.1.1.1.a. and b. except substitute 3/4 inch for one inch wherever one inch appears. Repairs to stitch 401 may be accomplished by use of stitch type 301.

3.5.1.3 Type 101 and 103 stitching. Tension of 101 stitch tacking shall be adjusted and maintained so there will be no loose stitching resulting in either loose underneath or top thread, or excessively tight stitching puckering outward appearance of coats. The underneath loop shall be on the inside of the coat, unless otherwise specified in the table of operations.

Downloaded from http://www.everyspec.com

3.5.1.3.1 Repairs of type 101 and 103 stitching. Repairs shall be accomplished by superimposing new tack or blindstitching in same location after removing threads of first broken tack or blindstitching. When repairing blindstitching superimpose stitching 1/2 inch over loose ends of broken stitching.

3.5.2 Buttonholes. The buttonholes shall be the eyelet end, square bar, cut first type, reinforced with gimp. The purl of the buttonhole shall be on the outside of the coat. The ends of the gimp shall be pulled through to the underside. The ends of the buttonhole stitching shall be tacked by hand or by machine, the width of the bar section, catching the ends of the buttonhole stitching and the gimp. The finished size of the buttonhole cut is specified in table I. When toggles are used to attach button to pocket flaps (see operation 44. of table I) only the eyelet of the buttonholes shall be cut and the ends of the gimp shall be caught in the bar.

3.5.3 Outside trim stitching. All outside trim stitching shall be done with either silk or nylon thread as specified in table I, however, only one type of thread shall be used in the outside trim stitching of any one coat.

3.6 Manufacturing operation requirements. The costs shall be made by and with the use of all operations listed in table I. The contractor is not required to follow the exact sequence of operations listed. Any additional basting or holding stitching used to facilitate manufacture is permissible providing the thread is removed or does not show on the finished coat.

3.6.1 Pressing Pressing specified in table I shall performed by use of a heated pressing iron or machine as commercially used for dress coats.

3.6.2 Figures. Figures 1 and 2 are furnished solely for guidance and information. Should variation from the written document appear in figures 1 and 2, the written document shall govern.

3.6.3 Use of automated apparel equipment. Automated apparel equipment may be used to perform any of the operations specified in table I, providing that the seam and stitch type are as specified and the finished component conforms to the required configuration. When a government finished shaper pattern is furnished, the component shall conform to that pattern.

NO.	TABLE I. MANUFACTURING OPERATIONS REQUIREMENTS	STITCH TYPE	SEAM AND STITCHING TYPE	STITCHES PER INCH	THREAD		
					NEEDLE	BOBBIN/ LOOPER	COVER
1.	<u>Cut basic material.</u> a. Spread the material without tension in a suitable number of plies for the applicable fabric. The cut parts from the the top and bottom ply shall match and correspond to the pattern. b. Lay the material in uniform widths and lengths. The plies shall not be stretched, pulled nor full, and one side of the lay shall be even. c. Cut coat parts in strict accordance with patterns which show directional lines, size, shape, placement of pockets and flaps, and notches for proper assembling of all parts. Use of drill holes for pocket and flap locations are prohibited. d. Cut all parts of the coat out of one piece of material, except flap linings, armhole shields and lower pocket piping pieces which may be cut from ends. Cut piping pieces in the warp direction. When armhole shields are cut from ends, the shields shall match each other. The pocket flap linings and shoulder loops may be cut in either the warp of filling direction. e. Cut underarm darts as indicated on pattern. f. The left front shall be dressed in the front shaping operation after the bottoms are shaped as defined in operation 19.d. and 19 f.						

NATICK Form 903
1 Dec 76 EDITION OF 1 OCT 76 WILL BE USED UNTIL EXHAUSTED.

Downloaded from http://www.everyspec.com

NO.	TABLE I. (cont'd) MANUFACTURING OPERATIONS REQUIREMENTS	STITCH TYPE	SEAM AND STITCHING TYPE	STITCHES PER INCH	THREAD		
					NEEDLE	BOBBIN/ LOOPER	COVER
1.	Cut basic material. (cont'd) g. When the coat is cut as part of the uniform, the coat and the trousers shall be cut from the same roll of material, except those parts which may be cut from ends.						
2.	Cut lining. a. Cut lining for body of coat, sleeves, yoke lining, vent lining, and right inside breast pocket facing in the direction of the warp, and in strict accordance with patterns furnished. The lower pocket facings may be cut in the direction of the warp or filling and in strict accordance with patterns furnished. The pocket flap linings, lower pocket facings and sleeve linings may be cut from ends. b. When sleeve linings are cut from ends, the parts shall approximately match the shade of the body lining and the sleeves shall match each other.						
3.	Cut trimmings. a. Cut twill cloth for armhole and shoulder stays on the bias. Cut twill cloth for inside breast pocket, flap and breast pocket stays, and lower hanging pockets in the direction of the warp. b. Cut wool flannel undercloth and collar interlining on the bias or cut alternate felt-fabric composite undercollar material.						

NATICK Form 903
1 Dec 76 EDITION OF 1 OCT 76 WILL BE USED UNTIL EXHAUSTED.

Downloaded from http://www.everyspec.com

NO.	TABLE I. (cont'd) MANUFACTURING OPERATIONS REQUIREMENTS	STITCH TYPE	SEAM AND STITCHING TYPE	STITCHES PER INCH	THREAD		
					NEEDLE	BOBBIN/ LOOPER	COVER
3.	Cut trimmings. (cont'd)						
	c. Cut wigan for sleeve bottoms on the bias.						
	d. Cut cotton warp and hair-wool filling cloth for shoulder loop interlining in either the warp or filling direction.						
4.	Replacement of damaged parts.						
	Care shall be exercised during the spreading, cutting, and manufacturing operations to assure that material defects and damages, as classified in MIL-STD-1490, are excluded and replaced with non-defective and properly matched material.						
5.	Shade marking.						
	All component parts of the basic material and linings, including sleeve linings whether cut from ends or in the main lay, shall be marked or ticketed to assure a uniform shade throughout the coat. Other parts cut from ends need not be shade marked. Any method may be used except:						
	a. Corrosive metal fastening devices. No metal device or sew-on type markings shall be used on rayon lining.						
	b. Adhesive-type tickets which discolor, leave traces of paper or adhesive on the material after removal of tickets.						

NATICK Form 903
1 Dec 76 EDITION OF 1 OCT 76 WILL BE USED UNTIL EXHAUSTED.

Downloaded from http://www.everyspec.com

NO.	TABLE I. (cont'd) MANUFACTURING OPERATIONS REQUIREMENTS	STITCH TYPE	SEAM AND STITCHING TYPE	STITCHES PER INCH	THREAD NEEDLE	THREAD BOBBIN/ LOOPER	THREAD COVER
5.	Shade marking. (cont'd)						
	NOTE: The use of ink pad numbering machine, rubber stamp or pencil is allowed, provided the numbering does not show on the outside of the coat, and wherever possible, is covered by the seam allowance.						
6.	Make shoulder loops.						
	Finished appearance. The shoulder loops shall be uniformly stitched and shall finish smooth and flat, without twists, gathers, puckers, pleats or raw edges and shall be uniform in shape and size in accordance with the finished shoulder loop shaper. The buttonholes shall be clean cut, well made, properly positioned, and the stitching shall be securely caught in the basic material. The pulling of the buttonholes shall be on the outside of the shoulder loops.						
	a. Fold loop in half lengthwise and seam raw side edges.	301 or 401	SSa-1 SSa-1	10-14 10-14	50 50	50 50	
	b. Press seam open and flat with seam off center of loop.						
	c. Seam point of loop.	301 or 401	SS-2(a) SSe-2(a)	10-14 10-14	50 50	50 70	
	d. Seam interlining to shoulder loop seam, positioned to reinforce buttonhole.	301	SSe-2(a)	8-12	50	50	

NATICK Form 903
1 Dec 76 EDITION OF 1 OCT 76 WILL BE USED UNTIL EXHAUSTED.

Downloaded from http://www.everyspec.com

TABLE I. (cont'd)

NO.	MANUFACTURING OPERATIONS REQUIREMENTS	STITCH TYPE	SEAM AND STITCHING TYPE	STITCHES PER INCH	THREAD NEEDLE	THREAD BOBBIN/ LOOPER	THREAD COVER
6.	Make shoulder loops. (cont'd)						
	or						
	Blind stitch interlining to side edges of shoulder loop.	103 or 301	SSm-1 SSm-1	4-8 4-8	70 50	 50	
	e. Turn loop with the seam on the underside, work out point and edges and press shoulder loop smooth and flat. The loop shall be uniform in shape and size in accordance with shoulder loop shaper. The loop shall finish 2-1/4 ± 1/8 inches wide at sleeve head tapering to 1-1/2 ± 1/8 inches at the base of point.						
	f. Edge stitch along sides and point, 1/16 to 3/32 inch from turned edges.	301	OSF-1 SSe-2(b)	10-14	0 silk or 0 nylon	0 silk or 0 nylon	
	g. Make a buttonhole centered on the narrow end of each loop. The inside edge of the eyelet shall be so positioned that the corresponding button will finish as specified in operation 44.c. The cut of the finished buttonhole after tacking shall measure not less than 5/8 inch or more than 3/4 inch (see 3.5.2).	Machine Hand		42-48 per buttonhole 46-50 per buttonhole	C silk or B nylon or B nylon 10 silk or 10 nylon	B silk or B nylon or F nylon	

NATICK Form 903
1 Dec 76 EDITION OF 1 OCT 76 WILL BE USED UNTIL EXHAUSTED.

Downloaded from http://www.everyspec.com

TABLE I. (cont'd)

NO.	MANUFACTURING OPERATIONS REQUIREMENTS	STITCH TYPE	SEAM AND STITCHING TYPE	STITCHES PER INCH	THREAD NEEDLE	THREAD BOBBIN/ LOOPER	THREAD COVER
6.	Make shoulder loops. (cont'd)						
	h. Tack ends of buttonhole stitching and gimp by hand or machine with a 1/4 inch bartack (see 3.5.2).	Buttonhole Machine or		21 per bartack	B silk or B nylon	B silk or B nylon	
		Hand		6 per tack	10 silk or 10 nylon		
7.	Make breast and lower pocket flaps.						
	Finished appearance. The pocket flaps shall be uniformly stitched and shall finish smooth and flat, without twists, gathers, puckers, pleats or raw edges and shall be uniform in shape and size in accordance with the finished pocket flap shaper. The seemed edges, the corners and points of the flaps shall be well worked out and the lining shall not be visible on the outside of the flaps. The buttonholes shall be clean cut, well made, properly positioned, and the stitching shall be securely caught in the basic material.						
	a. Seam lining to flaps, notch seam allowance on the bottom edge between corners and trim corners. When lining and flaps are trimmed during sewing operation to 3/16 inch or less, it will not be necessary to notch.	301 or	SSe-2(a)	10-14	50 or 0 silk or 0 nylon	50 or 0 silk or 0 nylon	
		401	SSe-2(a)		50 or 0 silk or 0 nylon	70 or 0 silk or 0 nylon	

NATICK Form 903
1 Dec 76 EDITION OF 1 OCT 76 WILL BE USED UNTIL EXHAUSTED.

Downloaded from http://www.everyspec.com

NO.	TABLE I. (cont'd) MANUFACTURING OPERATIONS REQUIREMENTS	STITCH TYPE	SEAM AND STITCHING TYPE	STITCHES PER INCH	THREAD NEEDLE	THREAD BOBBIN/ LOOPER	THREAD COVER
7.	Make breast and lower pocket flaps. (cont'd)						
	b. Turn; work out edges, points, and corners; and edge stitch 1/16 to 3/32 inch from turned edges. The lining shall not show on outside of flap.	301	SSe-2(b)	10-14	0 silk or 0 nylon	0 silk or 0 nylon	
	c. Make a vertical buttonhole in each flap centered between the side edges and with the inside edge of the eyelet 3/8 to 1/2 inch from the point of flap. The cut of the finished buttonhole after tacking shall measure not less than 5/8 inch or more than 3/4 inch (see 3.5.2).	Buttonhole Machine or		42-48 per buttonhole	C silk or B nylon or B nylon	B silk or B nylon or F nylon	
		Hand		46-50 per buttonhole	10 silk or 10 nylon		
	d. Tack ends of buttonhole stitching and gimp by hand or by machine stitching with a 1/4 inch bartack (see 3.5.2).	Machine or		21 per bartack	B silk or B nylon	B silk or B nylon	
		Hand		6 per tack	10 silk or 10 nylon		
	e. Overedge stitch together the top raw edges, of the flap, 1/8 to 3/16 inch gage.	502 or 503	SSa-1 SSa-1	6-8 6-8	50 50	50 50	
	NOTE: Care shall be exercised so that the material does not stretch when overedging. Overedge stitching has a tendency to stretch the raw edges to the point where the ends may protrude beyond the sides of the flap when stitched to coat.						

NATICK Form 903
1 Dec 76 EDITION OF 1 OCT 76 WILL BE USED UNTIL EXHAUSTED.

Downloaded from http://www.everyspec.com

NO.	TABLE I. (cont'd) MANUFACTURING OPERATIONS REQUIREMENTS	STITCH TYPE	SEAM AND STITCHING TYPE	STITCHES PER INCH	THREAD NEEDLE	THREAD BOBBIN/ LOOPER	THREAD COVER
7.	Make breast and lower pocket flaps. (cont'd)						
	f. Press breast and lower pocket flaps smooth and flat.						
8.	Make two breast patch pockets.						
	Finished appearance. The patch pockets shall conform to finished pocket shaper, be uniform in appearance and lie flat and smooth without twists, puckers, or raw edges. The binding shall have no raw edges showing on the outer side and be caught in the fabric, or the top edge of the pocket area may be overedge stitched.						
	a. Machine folded construction-when used.						
	(1) Form a 1-1/2 ± 1/8 inch wide vertical box pleat on the outside in the center of the pocket by a creasing machine or an automatic pleater to conform with finished patch pocket pleat shaper.						
	(2) Blindstitch the abutted edges of the pleat together.	103 or 301	SSm-1	4-8	50 50	 50	
	b. Hand folded construction-when used.						
	(1) Fold pocket vertically on the outside, matching cut edges of pocket and stitch 1-1/2 ± 1/8 inch from folded edge.	301	OSf-1	12-16	50	50	

NATICK Form 903
1 Dec 76 EDITION OF 1 OCT 76 WILL BE USED UNTIL EXHAUSTED.

Downloaded from http://www.everyspec.com

Downloaded from http://www.everyspec.com

NO.	TABLE I. (cont'd) MANUFACTURING OPERATIONS REQUIREMENTS	STITCH TYPE	SEAM AND STITCHING TYPE	STITCHES PER INCH	THREAD NEEDLE	THREAD BOBBIN/LOOPER	THREAD COVER
8.	Make two breast patch pockets. (cont'd)						
	b. Hand folded construction-when used. (cont'd)						
	(2) Form a 1-1/2 ± 1/8 inch wide vertical box pleat to the outside in the center of pocket and stitch across top and bottom of pleat 1/8 to 3/16 inch from raw edge to conform with finished patch pocket pleat shaper.	301	SSa-1	12-16	50	50	
	(3) Press pleat in center of pocket, flat and smooth.						
	c. Trim the bottom corners of the pockets.						
	d. Turn the sides and bottom edges of the pockets and crease to conform to the finished pocket shaper.						
	e. Put the shaper on the pocket and trim top edge if necessary.						
	f. Bind the top edge of pocket. The raw edges of the binding may be turned in and caught within the binding or the inside of the binding may be a raw edge.	301	BSc-1 or BSb-1	12-16	50	50	
	or						
	The top edge of the pocket may be overedge stitched.	502 or 503 or 504	EFd-1	6-10	50	50	
	g. Press pockets smooth and flat						

NATICK Form 903
1 Dec 76 EDITION OF 1 OCT 76 WILL BE USED UNTIL EXHAUSTED.

Downloaded from http://www.everyspec.com

NO.	TABLE I. (cont'd) MANUFACTURING OPERATIONS REQUIREMENTS	STITCH TYPE	SEAM AND STITCHING TYPE	STITCHES PER INCH	THREAD NEEDLE	THREAD BOBBIN/LOOPER	THREAD COVER
9.	Make collar.						
	Finished appearance. The collar shall be uniform in appearance and the edges shall be smooth and flat without twisting, gathers, puckers, or raw edges (top and sides). The interlining shall not show after the collar is set.						
	a. Wool flannel cloth (when used).						
	(1) Join wool undercollar pieces. Press undercollar seam open and flat is two-piece construction is used.	301	SSa-1	10-14	50	50	
	(2) The bottom raw edge of the undercollar may be overedge stitched.	502 or 503	EFd-1 EFd-1	8-10 8-10	50 50	50 50	
	(3) Join collar interlining if two-piece construction is used.	301	LSa-1	10-14	50	50	
	(4) Pad interlining to undercollar with seven to eight rows of blindstitching with fullness between rows of blindstitching.	103	SSm7 or 8	4-8	70		
	(5) Press undercloth flat.						
	(6) Mark and cut the undercollar in accordance with undercollar shaper or undercollar may be die cut to conform to pattern shaper. Trim undercollar interlining 1/8 to 3/16 inch away from lower edge of undercollar.						

NATICK Form 903
1 Dec 76 EDITION OF 1 OCT 76 WILL BE USED UNTIL EXHAUSTED.

TABLE I. (cont'd)

NO.	MANUFACTURING OPERATIONS REQUIREMENTS	STITCH TYPE	SEAM AND STITCHING TYPE	STITCHES PER INCH	THREAD NEEDLE	THREAD BOBBIN/ LOOPER	THREAD COVER
9.	Make collar. (cont'd)						
	a. Wool flannel cloth (when used). (cont'd)						
	(7) Mark the breakline of undercollar with the undercollar stand marker.						
	(8) Seam top and side edges of undercollar 1/2 ± 1/8 inch from edge.	301	SSa-1	10-14	50	50	
	(9) Seam undercollar to interlining at breakline; stand shall be 1-1/4 ± 1/8 inches at center.	301	SSa-1	10-14	50	50	
	(10) Mark top collar with pattern shaper.						
	(11) Position upper edge of top collar between upper edges of undercollar and interlining matching notches. Seam top collar to interlining. When operation 9.a.(15) (top edge) is performed by machine, the top collar need not be sewn to interlining.	301	LSa-1	4-6	50	50	
	(12) Baste ends, upper edge of collar, and at crease line.	Hand or 101			commercial		
	(13) In lieu of operations 9.a.(11) and 9.a.(12) baste the top collar to the undercollar along crease-line and outer edge matching notches.	Hand or 101			commercial		
	(14) Trim and turn edges of top collar over interlining between undercollar and interlining, and baste edges.	Hand or machine			commercial		

NATICK Form 903
1 Dec 76 EDITION OF 1 OCT 76 WILL BE USED UNTIL EXHAUSTED.

Downloaded from http://www.everyspec.com

NO.	TABLE I. (cont'd) MANUFACTURING OPERATIONS REQUIREMENTS	STITCH TYPE	SEAM AND STITCHING TYPE	STITCHES PER INCH	THREAD NEEDLE	THREAD BOBBIN/ LOOPER	THREAD COVER
9.	Make collar. (cont'd)						
	(15) Fell top and side edges of top collar to undercollar by hand, or top edge may be machine felled with simulated hand stitching. The corners and sides shall be felled by hand. When simulated hand stitching is used, the operation shall precede collar basting.		Hand		8-10 or C nylon	C silk	
		or					
		Machine (simulated hand felling)		6-10	A silk or B nylon		
	or						
	The slide edges may be 301 stitched 1/16 inch from finished shaped edge through the collar interlining. Trim top collar material only, 1/4 inch to 3/8 inch from finished seam line.	301		10-14	50	50	
	(16) Trim bottom edge of top collar to allow for seaming.						
	(17) Press and crease stand of undercollar holding creaseline short and stretch outer edge of collar across the shoulders. Center area of creaseline shall be straight for a distance of 3 to 4 inches.						
	b. Felt-fabric composite (when used).						
	Finished appearance. The collar shall be uniform in appearance and the edges shall be smooth and flat without twisting, gathers, puckers, or raw edges (top and sides). The composite undercollar shall be one piece and collar interlining is not required.						

NATICK Form 903
1 Dec 76 EDITION OF 1 OCT 76 WILL BE USED UNTIL EXHAUSTED.

Downloaded from http://www.everyspec.com

NO.	TABLE I. (cont'd) MANUFACTURING OPERATIONS REQUIREMENTS	STITCH TYPE	SEAM AND STITCHING TYPE	STITCHES PER INCH	THREAD NEEDLE	THREAD BOBBIN/ LOOPER	THREAD COVER
9.	Make collar. (cont'd)						
	b. Felt-fabric composite (when used). (cont'd)						
	(1) Mark and shape undercollar to conform to pattern shaper. Cut in accordance with undercollar shaper, or undercollar may be die-cut to conform to pattern shaper.						
	(2) Mark the breakline of undercollar with the undercollar stand marker.						
	(3) Stitch undercollar at breakline, stand shall be 1-1/4 ± 1/8 inches at center.	301	SSa-1	10-14	50	50	
	(4) Mark top collar with pattern shaper.						
	(5) Baste top edge of finished undercollar along straight top edge of top collar matching the notches and distributing fullness of top collar between the notches on outer edge of undercollar and top collar.	Hand or Machine			commercial		
	NOTE: When top edge of collar is machine felled with simulated hand felling, operation 9b (5) may be omitted.						
	(6) Baste the top collar to undercollar along creaseline and outer edge, putting in proper fullness.	Hand or Machine			commercial		
	(7) Trim, turn, and baste edges of top collar.	Hand or Machine			commercial		

NATICK Form 903
1 Dec 76 EDITION OF 1 OCT 76 WILL BE USED UNTIL EXHAUSTED.

Downloaded from http://www.everyspec.com

TABLE I. (cont'd)

NO.	MANUFACTURING OPERATIONS REQUIREMENTS	STITCH TYPE	SEAM AND STITCHING TYPE	STITCHES PER INCH	THREAD NEEDLE	THREAD BOBBIN/ LOOPER	THREAD COVER
9.	Make collar. (cont'd)						
	b. Felt-fabric composite (when used). (cont'd)						
	(8) Fell top and side edges of top collar to finished undercollar by hand, or top edge may be machine felled with simulated hand felling. The corners and sides shall be felled by hand	Hand or Machine (simulated hand felling)		8-10 6-10	C silk or A silk or B nylon		
	or						
	The side edges may be 301 stitched 1/16 inch from the finished shaped edge through all plies. Trim top collar material only 1/4 to 3/8 inch from finished seam line.	301		10-14	50	50	
	NOTE: When simulated handstitching is used, the operation shall precede collar basting, and fullness of top collar shall be distributed between the matched notches on outer edge of undercollar and top collar.						
	(9) Trim bottom (neck) edge of top collar to allow for seaming.						
	(10) Press and crease the stand of the top collar and the undercollar together in one operation to shape, holding the creaseline short and stretching the outer edge of the collar across the area of the shoulders.						

NATICK Form 903
1 Dec 76 EDITION OF 1 OCT 76 WILL BE USED UNTIL EXHAUSTED.

Downloaded from http://www.everyspec.com

Downloaded from http://www.everyspec.com

TABLE I. (cont'd)

NO.	MANUFACTURING OPERATIONS REQUIREMENTS	STITCH TYPE	SEAM AND STITCHING TYPE	STITCHES PER INCH	THREAD NEEDLE	THREAD BOBBIN/LOOPER	THREAD COVER
10.	Make sleeves.						
	Finished appearance. The sleeves shall be uniform in width. The seams shall be pressed smooth and flat and shall be without gathers, puckers, pleats, or raw edges. The blindstitches for tacking turn-up of sleeves shall catch the wigan only. The linings and wigan shall not be short or tight at bottom of sleeves.						
	a. Join forearm seam of sleeve, distributing fullness between notches.	301 401	SSa-1 SSa-1	10-14 10-14	30 30	30 50	
	b. Press forearm seam open and flat holding seam short.						
	c. Seam wigan piece to forearm seam and sides of backarm seam allowances. Bottom edge of wigan shall be 1/2 to 3/4 inch below turn-up notches. Trim ends of wigan even with edges of sleeve.	301	SSa-1	6-10	30	30	
	d. Baste the turn-up of bottom sleeve as indicated by notches on pattern.	101 or hand			commercial		
	e. Mark sleeve for braid (class 1 and 2 coats only). Lower edge of braid shall be 3 ± 1/8 inches from finished bottom edge of sleeve.						
	f. Seam braid to sleeve (class 1 and 2 coats only) at marks, with a row of stitching on each edge not more than 1/16 inch from edge. The ends of braid shall be even with sleeve edges and be caught in the backarm seam.	301		10-14	50	50	

NATICK Form 903
1 Dec 76 EDITION OF 1 OCT 76 WILL BE USED UNTIL EXHAUSTED.

NO.	TABLE I. (cont'd) MANUFACTURING OPERATIONS REQUIREMENTS	STITCH TYPE	SEAM AND STITCHING TYPE	STITCHES PER INCH	THREAD NEEDLE	THREAD BOBBIN/LOOPER	THREAD COVER
10.	Make sleeves. (cont'd)						
	g. Press bottom of sleeve, and remove basting at bottom of sleeve.						
	h. Join backarm seam of sleeves.	301 or 401	SSa-1 SSa-1	10-14 10-14	30 30	30 30	
	i. Press backarm seam open and flat.						
	j. Blindstitch turn-up of sleeve to wigan.	103 or 301	EFc-1(b) EFc-1(b)	4-8	70 70	70 70	
	k. Join backarm seam and forearm seam of sleeve linings.	301 or 401	SSa-1 SSa-1	10-14 10-14	50 50	50 70	
	l. The sleeve linings shall extend not less than 3/4 inch above the top of sleeve. Tack forearm seam and backarm seam of sleeve lining to forearm seam and backarm seam of sleeves respectively; tacking to extend from not more than 6 inches below top to not more than 6 inches above creased bottom edge. When tacking is done by hand, both ends of stitching shall be securely backstitched with not less than three stitches. A hand basting stitch 1-1/2 inches long will be acceptable.	Hand or 301		2-3 4-8	50 50	 50	
	m. Pull sleeve through lining and baste turn-up of sleeve lining. Sleeve lining shall have not less than 1-1/4 inches turn-up. The sleeve lining may be felled without basting (see operation 38.c.).	101 or Hand			commercial		

NATICK Form 903
1 Dec 76 EDITION OF 1 OCT 76 WILL BE USED UNTIL EXHAUSTED.

Downloaded from http://www.everyspec.com

TABLE I. (cont'd)

NO.	MANUFACTURING OPERATIONS REQUIREMENTS	STITCH TYPE	SEAM AND STITCHING TYPE	STITCHES PER INCH	THREAD NEEDLE	THREAD BOBBIN/ LOOPER	THREAD COVER
10.	Make sleeves. (cont'd)						
	n. Turn sleeves and assemble in pairs.						
	o. Sleeve may be rolled pressed prior to hanging to facilitate check on balance of sleeve during sleeve setting operation.						
11.	Make front linings.						
	Finished appearance. The lining shall finish without pleats or puckers. The pocket shall be positioned as indicated on patterns and of correct size.						
	a. Seam underarm darts in front linings; the edges of the darts shall be toward the back of coat.	301 or 401	SSa-1 SSa-1	10-14 10-14	50 50	50 70	
	b. Seam front lining to facings placing fullness on the lining to allow facing to lie smooth and flat.	301 or 401	SSa-1 SSa-1	10-14 10-14	50 50	50 70	
12.	Make inside breast pocket and attach combination size-identification and instruction label.						
	a. Mark position for a 3/16 to 1/4 inch double piped pocket on right front lining as indicated by pattern.						
	b. The top and bottom raw edges of the facing shall be turned in and seemed to the twill cloth pocket, catching the top edge of the combination size-identification label in the seaming of the lower edge. When either edge is selvage, the edge need not be turned in.	301	LSd-1	10-14	50	50	

Downloaded from http://www.everyspec.com

Downloaded from http://www.everyspec.com

TABLE I. (cont'd)

NO.	MANUFACTURING OPERATIONS REQUIREMENTS	STITCH TYPE	SEAM AND STITCHING TYPE	STITCHES PER INCH	THREAD NEEDLE	THREAD BOBBIN/LOOPER	THREAD COVER
12.	Make inside breast pocket and attach combination size-identification and instruction label. (cont'd)						
	c. Seam the remaining three sides of the combination size-identification lable to the twill cloth pocket, not more than 3/16 inch from edges of label.	301		10-14	50	50	
	d. Seam twill cloth pocket, positioned at marks on coat facing and lining, with twill cloth stay, extending to the armhole, on the underside, with rwo rows of stitching, not less than 1/4 inch or more than 3/8 inch apart.	301	SSv-2	10-14	50	50	
	e. Cut opening of the pocket and tongue notch the ends of the opening. The finished length of the pocket opening shall be not less than 4-3/4 inches and it shall not extend into the facing more than 1-1/2 inches not extend into the armhole.						
	f. Turn pocket through cut opening, make and stitch top and bottom piping, and tack corners through tongue notch.	301		10-14	50	50	
	or						
	g. Pocket opening may be accomplished with a double piped pocket machine which stitches, cuts, and turns stitched piped edges in one operation. When machine is used, the lining for the piping may be trimmed to permit insertion into the machine. The joining seam of the top and bottom piped edges shall be raise stitched through lining and coat facing prior to pocket closing, and top edgestitched through all plies. Tack ends of pocket opening.	101 and 301		10-14	50 A silk or 0 nylon	50	
				10-14	50 or A silk or 0 nylon	50 or A silk or 0 nylon	

NATICK Form 903
1 Dec 76 EDITION OF 1 OCT 76 WILL BE USED UNTIL EXHAUSTED.

Downloaded from http://www.everyspec.com

TABLE I. (cont'd)

NO.	MANUFACTURING OPERATIONS REQUIREMENTS	STITCH TYPE	SEAM AND STITCHING TYPE	STITCHES PER INCH	THREAD NEEDLE	THREAD BOBBIN/LOOPER	THREAD COVER
12.	Make inside breast pocket and attach combination size-identification and instruction label. (cont'd)						
	NOTE: When this machine is used, the contractor may utilize the machine manufacturer's recommended Piping Reinforcement material in addition to the twill cloth.						
	h. Seam instruction label on all four sides, to the lining through one ply twill cloth pocket, positioned with top edge 1/8 to 1/4 inch below joining seam of lower inside pocket piping at center of pocket opening.	301		10-14	50	50	
	i. Turn pocket into position and stitch sides and bottom edge of the pocket. The finished pocket shall measure not less than 5-1/2 inches in depth for all sizes. The back part of the pocket twill cloth shall be held taut to prevent gapping at the pocket opening.	301	SSa-1	10-14	50	50	
	j. Stitch twill cloth stay through lining from back end of pocket to armhole. Notch top of pocket at front edge of the full width of seam allowance and blindstitch inner ply of pocket to facing (see operation 38.e., for alternate operation).	301	SSv-1 and	10-14	50	50	
		103 or	SSm-1	2-4	70		
		306	SSm-1	2-4	70	70	
	k. Press seam joining front body lining to the facings and darts flat to one side toward side seam: press pocket smooth and flat; press open bottom of joining seam.						

NATICK Form 903
1 Dec 76 EDITION OF 1 OCT 76 WILL BE USED UNTIL EXHAUSTED.

NO.	TABLE I. (cont'd) MANUFACTURING OPERATIONS REQUIREMENTS	STITCH TYPE	SEAM AND STITCHING TYPE	STITCHES PER INCH	THREAD NEEDLE	THREAD BOBBIN/ LOOPER	THREAD COVER
13.	Make sweat shields and yoke.						
	a. Bind the bottom raw edge of shield (see 3.2.3).	301	BSc-1	10-14	50	50	
	b. Seam a 1/2 ± 1/8 inch hem on bottom of one piece yoke lining with the stitching 1/8 ± 1/16 inch from turned in edge.	301	EF-1	10-14	50	50	
	c. Press a 3/4 to 1 inch pleat at center and press across bottom edge of yoke. Fold shall be to left side as worn.						
14.	Make backs and attach size label.						
	Finished appearance. The backs shall be joined without gathers, puckers, or pleats. The right vent lining and left vent shall finish smooth and flat without puckers, gathers or pleats.						
	a. Turn under edges of center back and side seam allowances of back parts, 1/4 ± 1/16 inch and blindstitch. The blindstitching of center back shall terminate at top of vent opening.	103	SSba-3(a)	3-6	70		
	b. Join center backs with a 5/8 inch seam with stitching terminating at vent notch. Slash right seam allowances at top of vent and press back seam open	301 or 401	SSba-3 (b & c)	10-14	30	30	
			SSba-3 (b & c)	10-14	30	50	
	c. Fold back left vent, in line with center back turned edge and bottom notch and stitch from top to bottom of vent 3/16 ± 1/16 inch from the raw edge.	301 or 401	SSa-1	10-14	50	50	
				10-14	50	70	

NATICK Form 903
1 Dec 76 EDITION OF 1 OCT 76 WILL BE USED UNTIL EXHAUSTED.

Downloaded from http://www.everyspec.com

TABLE I. (cont'd)

NO.	MANUFACTURING OPERATIONS REQUIREMENTS	STITCH TYPE	SEAM AND STITCHING TYPE	STITCHES PER INCH	THREAD NEEDLE	THREAD BOBBIN/ LOOPER	THREAD COVER
14.	Make backs and attach size label. (cont'd)						
	d. Fold back left vent in line with center seam and bottom notch, and press left vent.						
	e. Fold top of vent lining and position to right vent, face to face, with side raw edges even and stitch lining to right vent, 1/16 to 1/8 inch from edge. Turn vent to inside even with folded back seam allowance, fold lining to inside and stitch from top to bottom of vent 1/32 to 1/16 inch from folded edge.	301 301	SSa-1 SSb-12	10-14 10-14	50 50	50 50	
	f. Stitch top of vent lining to the right back seam allowance (viewing coat from inside) with the stitching continuing vertically down seam for a distance of 3/8 ± 1/8 inches.	301		10-14	50	50	
	g. Stitch top of vent lining to the left back seam allowance with the stitching continuing vertically down seam for a distance of 3/8 ± 1/8 inch.	301		10-14	50	50	
	h. Tack diagonally across top of vent through all plies, the width of the left vent allowance.	301		10-14	0 silk or 0 nylon	0 silk or 0 nylon	
	i. Baste yoke to inside of back in center maintaining the center pleat in the lining, across shoulder area, and armhole.	Hand or 301		4-8 10-14	commercial		
	j. Sew on hanger and size label to center of back at collar seam with the stitching through all plies. Label shall be plainly visible. Hanger shall measure finished 2 ± 1/2 inches long.	301	SSa-1	10-14	50	50	

NATICK Form 903
1 Dec 76 EDITION OF 1 OCT 76 WILL BE USED UNTIL EXHAUSTED.

Downloaded from http://www.everyspec.com

NO.	TABLE I. (cont'd) MANUFACTURING OPERATIONS REQUIREMENTS	STITCH TYPE	SEAM AND STITCHING TYPE	STITCHES PER INCH	THREAD NEEDLE	THREAD BOBBIN/ LOOPER	THREAD COVER
15.	Make fronts.						
	Finished appearance. All darts, pockets, and flaps shall be positioned and finished without pleats or gathers. The front edges and pleats of patch pockets and front edge of coat, point of flap shall be at center of pleat, and top edge of patch pocket flaps shall be at a right angle to front edge when coat is buttoned (see Fig 2, Views A and C). The width of pocket cords or pipings, pocket openings, and depth of pockets shall be correct and uniform.						
	a. Seam the cut underarm darts on fronts with the dart ends armhole even.	301 or 401	SSa-1 SSa-1	10-14 10-14	50 50	50 70	
	b. Seam the vertical cut darts on fronts.	301 or 401	SSa-1 SSa-1	10-14 10-14	50 50	50 70	
	c. Press dart seams open and flat holding front waist dart short and front of coat straight.						
	d. Mark fronts for position of breast pockets, breast pocket flaps, lower pocket openings, and lower pocket flaps as indicated by pattern.						
	e. Seam breast pockets on fronts at marks 1/16 to 3/32 inch from pocket edges, with the ends of the binding turned in. Seaming shall be through twill cloth stay on the underside of front.	301		10-14	0 silk or 0 nylon	0 silk or 0 nylon	

NATICK Form 903
1 Dec 76 EDITION OF 1 OCT 76 WILL BE USED UNTIL EXHAUSTED.

Downloaded from http://www.everyspec.com

TABLE I. (cont'd)

NO.	MANUFACTURING OPERATIONS REQUIREMENTS	STITCH TYPE	SEAM AND STITCHING TYPE	STITCHES PER INCH	THREAD NEEDLE	THREAD BOBBIN/ LOOPER	THREAD COVER
15	Make fronts. (cont'd)						
	f. Seam breast pocket flaps on fronts at marks 3/16 ± 1/16 inch from overedge top of flaps. Sew on top and through the marked line as indicated on the pattern through twill cloth stay on the underside of front. Turn down flap over pocket opening and raise stitch 1/16 to 3/32 inch. Top of pocket and flap shall be stitched through twill cloth stay, which shall extend to and be caught in the armhole tacking.	301		10-14	0 silk or 0 nylon	0 silk or 0 nylon	
	g. Sew snap fasteners on breast flaps and patch pockets.						
	Finished appearance. The snap fastener shall be so positioned as to effect a smooth, flat closure and the stitching shall not show on outside of flaps. The snap fasteners shall be securely attached.						
	(1) Sew a snap fastener stud to underside of breast patch pocket flap at each corner, centered on the edge stitching and completely hidden from outside view. When attached by machine, the stud shall be sewn to lining through a small reinforcement piece of twill cloth and not more than 7/16 inch from sides and bottom edges of flap.	Hand or 101 or 301		3-4 double thread 21-22 per fastener 14-16 per fastener	A or C silk 50 50	 50	

NATICK Form 903
1 Dec 76 EDITION OF 1 OCT 76 WILL BE USED UNTIL EXHAUSTED.

Downloaded from http://www.everyspec.com

TABLE I. (cont'd)

NO.	MANUFACTURING OPERATIONS REQUIREMENTS	STITCH TYPE	SEAM AND STITCHING TYPE	STITCHES PER INCH	THREAD NEEDLE	THREAD BOBBIN/ LOOPER	THREAD COVER
13.	Make sweat shields and yoke.						
	a. Bind the bottom raw edge of shield (see 3.2.3).	301	BSc-1	10-14	50	50	
	b. Seam a 1/2 ± 1/8 inch hem on bottom of one piece yoke lining with the stitching 1/8 ± 1/16 inch from turned in edge.	301	EF-1	10-14	50	50	
	c. Press a 3/4 to 1 inch pleat at center and press across bottom edge of yoke. Fold shall be to left side as worn.						
14.	Make backs and attach size label.						
	Finished appearance. The backs shall be joined without gathers, puckers, or pleats. The right vent lining and left vent shall finish smooth and flat without puckers, gathers or pleats.						
	a. Turn under edges of center back and side seam allowances of back parts, 1/4 ± 1/16 inch and blindstitch. The blindstitching of center back shall terminate at top of vent opening.	103	SSba-3(a)	3-6	70		
	b. Join center backs with a 5/8 inch seam with stitching terminating at vent notch. Slash right seam allowances at top of vent and press back seam open	301 or 401	SSba-3 (b & c)	10-14	30	30	
			SSba-3 (b & c)	10-14	30	50	
	c. Fold back left vent, in line with center back turned edge and bottom notch and stitch from top to bottom of vent 3/16 ± 1/16 inch from the raw edge.	301 or 401	SSa-1	10-14	50	50	
				10-14	50	70	

NATICK Form 903
1 Dec 76 EDITION OF 1 OCT 76 WILL BE USED UNTIL EXHAUSTED.

Downloaded from http://www.everyspec.com

TABLE I. (cont'd)

NO.	MANUFACTURING OPERATIONS REQUIREMENTS	STITCH TYPE	SEAM AND STITCHING TYPE	STITCHES PER INCH	THREAD NEEDLE	THREAD BOBBIN/ LOOPER	THREAD COVER
14.	Make backs and attach size label. (cont'd)						
	d. Fold back left vent in line with center seam and bottom notch, and press left vent.						
	e. Fold top of vent lining and position to right vent, face to face, with side raw edges even and stitch lining to right vent, 1/16 to 1/8 inch from edge. Turn vent to inside even with folded back seam allowance, fold lining to inside and stitch from top to bottom of vent 1/32 to 1/16 inch from folded edge.	301 301	SSa-1 SSb-12	10-14 10-14	50 50	50 50	
	f. Stitch top of vent lining to the right back seam allowance (viewing coat from inside) with the stitching continuing vertically down seam for a distance of 3/8 ± 1/8 inches.	301		10-14	50	50	
	g. Stitch top of vent lining to the left back seam allowance with the stitching continuing vertically down seam for a distance of 3/8 ± 1/8 inch.	301		10-14	50	50	
	h. Tack diagonally across top of vent through all plies, the width of the left vent allowance.	301		10-14	0 silk or 0 nylon	0 silk or 0 nylon	
	i. Baste yoke to inside of back in center maintaining the center pleat in the lining, across shoulder area, and armhole.	Hand or 301		4-8 10-14	commercial		
	j. Sew on hanger and size label to center of back at collar seam with the stitching through all plies. Label shall be plainly visible. Hanger shall measure finished 2 ± 1/2 inches long.	301	SSa-1	10-14	50	50	

NATICK Form 903
1 Dec 76 EDITION OF 1 OCT 76 WILL BE USED UNTIL EXHAUSTED.

Downloaded from http://www.everyspec.com

NO.	TABLE I. (cont'd) MANUFACTURING OPERATIONS REQUIREMENTS	STITCH TYPE	SEAM AND STITCHING TYPE	STITCHES PER INCH	THREAD NEEDLE	THREAD BOBBIN/ LOOPER	THREAD COVER
15.	Make fronts.						
	Finished appearance. All darts, pockets, and flaps shall be positioned and finished without pleats or gathers. The front edges and pleats of patch pockets and front edge of coat, point of flap shall be at center of pleat, and top edge of patch pocket flaps shall be at a right angle to front edge when coat is buttoned (see Fig 2, Views A and C). The width of pocket cords or pipings, pocket openings, and depth of pockets shall be correct and uniform.						
	a. Seam the cut underarm darts on fronts with the dart ends armhole even.	301 or 401	SSa-1 SSa-1	10-14 10-14	50 50	50 70	
	b. Seam the vertical cut darts on fronts.	301 or 401	SSa-1 SSa-1	10-14 10-14	50 50	50 70	
	c. Press dart seams open and flat holding front waist dart short and front of coat straight.						
	d. Mark fronts for position of breast pockets, breast pocket flaps, lower pocket openings, and lower pocket flaps as indicated by pattern.						
	e. Seam breast pockets on fronts at marks 1/16 to 3/32 inch from pocket edges, with the ends of the binding turned in. Seaming shall be through twill cloth stay on the underside of front.	301		10-14	0 silk or 0 nylon	0 silk or 0 nylon	

NATICK Form 903
1 Dec 76 EDITION OF 1 OCT 76 WILL BE USED UNTIL EXHAUSTED.

Downloaded from http://www.everyspec.com

TABLE I. (cont'd)

NO.	MANUFACTURING OPERATIONS REQUIREMENTS	STITCH TYPE	SEAM AND STITCHING TYPE	STITCHES PER INCH	THREAD NEEDLE	THREAD BOBBIN/ LOOPER	THREAD COVER
15	Make fronts. (cont'd)						
	f. Seam breast pocket flaps on fronts at marks 3/16 ± 1/16 inch from overedge top of flaps. Sew on top and through the marked line as indicated on the pattern through twill cloth stay on the underside of front. Turn down flap over pocket opening and raise stitch 1/16 to 3/32 inch. Top of pocket and flap shall be stitched through twill cloth stay, which shall extend to and be caught in the armhole tacking.	301		10-14	0 silk or 0 nylon	0 silk or 0 nylon	
	g. Sew snap fasteners on breast flaps and patch pockets.						
	Finished appearance. The snap fastener shall be so positioned as to effect a smooth, flat closure and the stitching shall not show on outside of flaps. The snap fasteners shall be securely attached.						
	(1) Sew a snap fastener stud to underside of breast patch pocket flap at each corner, centered on the edge stitching and completely hidden from outside view. When attached by machine, the stud shall be sewn to lining through a small reinforcement piece of twill cloth and not more than 7/16 inch from sides and bottom edges of flap.	Hand or 101 or 301		3-4 double thread 21-22 per fastener 14-16 per fastener	A or C silk 50 50	 50	

NATICK Form 903
1 Dec 76 EDITION OF 1 OCT 76 WILL BE USED UNTIL EXHAUSTED.

Downloaded from http://www.everyspec.com

NO.	TABLE I. (cont'd) MANUFACTURING OPERATIONS REQUIREMENTS	STITCH TYPE	SEAM AND STITCHING TYPE	STITCHES PER INCH	THREAD NEEDLE	THREAD BOBBIN/ LOOPER	THREAD COVER
15.	Make fronts. (cont'd)						
	(2) Sew on snap fastener socket at each side of each breast patchpocket to correspond with with fastener studs on flaps. Hand stitching shall be tacked off with not less than two stitches. When pocket is attached to front, the stitching may be through the pocket and forepart of coat only.	Hand or 101 or 301		3-4 double thread 21-22 per fastener 14-16 per fastener	A or C silk 50 50	 50	
16.	Make two lower pockets.						
	a. Double piping construction-when used.						
	(1) Position top edge of facing piece on twill cloth pocket as indicated by notches on patterns; turn in the bottom edge of facing piece and seam to twill cloth pocket. Selvage edge need not be turned in:	301	LSd-1	10-14	50	50	
	(2) Position the wide piping piece on twill cloth pocket with edge even with opposite end of twill cloth pocket and single stitch 1/4 to 3/8 inch from edge.	301	SSa-1	10-14	50	50	
	(3) Position piping pieces on outside of coat front at mark and seam through coat and twill cloth stay piece on underside of coat. The narrow piping piece shall be used to form the upper piping.	301		10-14	50	50	
	(4) Cut open through coat and twill cloth stay on underside of coat and tongue notch the ends of the pocket opening. Turn pocket through opening.						

NATICK Form 903
1 Dec 76 EDITION OF 1 OCT 76 WILL BE USED UNTIL EXHAUSTED.

Downloaded from http://www.everyspec.com

NO.	TABLE I. (cont'd) MANUFACTURING OPERATIONS REQUIREMENTS	STITCH TYPE	SEAM AND STITCHING TYPE	STITCHES PER INCH	THREAD NEEDLE	THREAD BOBBIN/ LOOPER	THREAD COVER
16.	Make two lower pockets. (cont'd)						
	a. Double piping construction-when used. (cont'd)						
	(5) Open seam and fold each piping piece to form a firm 1/8 to 1/4 inch piping and seam between the folds through seam. The stitching shall be imbedded in the seam.	301	SSaf-2(b)	10-14	50	50	
	(6) Turn twill cloth pocket up and stitch across top of pocket adjacent to top piping piece; stitch, catching facing and twill cloth pocket in the stitching, closing top of pocket.	301	SSa-1	10-14	50	50	
	(7) Adjust pipings, tongues, and twill cloth stay piece and tack ends of pocket opening, continue stitching around the twill cloth pocket.	301		10-14	50	50	
	b. One piece cord construction-when used.						
	(1) Edges at pocket openings may be finished with 1/8 to 3/16 inch cord as follows:						
	(2) Position top edge of facing piece on twill cloth pocket as indicated by notches on pattern. Turn in the bottom edge of facing piece and seam to twill cloth pocket. Selvage edge need not be turned in.	301	LSd-1	10-14	50	50	
	(3) Position the twill cloth stay pieces on the underside of coat with the cord piece positioned on the outside of coat as indicated by marks on pattern.						

Downloaded from http://www.everyspec.com

NO.	TABLE I. (cont'd) MANUFACTURING OPERATIONS REQUIREMENTS	STITCH TYPE	SEAM AND STITCHING TYPE	STITCHES PER INCH	THREAD NEEDLE	THREAD BOBBIN/ LOOPER	THREAD COVER
16.	Make two lower pockets. (cont'd)						
	b. One piece cord construction-when used. (cont'd)						
	(4) Seam through cord piece, coat, and twill cloth piece on underside of coat. (A special two-needle pocket machine with cutting knife may be used for this operation).	301		10-14	50	50	
	(5) Cut pocket opening through cord piece, coat, and twill cloth stay piece. Turn pocket through opening and stitch to form a 1/8 to 3/16 inch cord at lower edge of opening. Seam twill cloth hanging pocket to lower edge of cord piece.	301		10-14	50	50	
	(6) Pull top cord piece through pocket opening.						
	(7) Turn up pocket and position above the top cord and stitch to form a 1/8 to 3/16 inch cord edge. Upper cord edge may be formed separately and the pocket closed as specified in operation 16.a. (6) above.	301		10-14	50	50	
	(8) Smooth out pocket, cord pieces and twill cloth stay pieces, securely tacking ends of pocket opening and stitch around the twill cloth pocket.	301	SSa-1	10-14	50	50	
	c. Double piped pocket machine construction-when used.						
	Operation 16.b. may be accomplished with a double piped pocket machine which stitches, cuts, and turns stitched piped edges in one operation. When this machine is used, the welt piece may be trimmed to permit insertion into this machine.	101 and		10-14	50 or A-3 or 0 nylon		

NATICK Form 903
1 Dec 76 EDITION OF 1 OCT 76 WILL BE USED UNTIL EXHAUSTED.

Downloaded from http://www.everyspec.com

NO.	TABLE I. (cont'd) MANUFACTURING OPERATIONS REQUIREMENTS	STITCH TYPE	SEAM AND STITCHING TYPE	STITCHES PER INCH	THREAD NEEDLE	THREAD BOBBIN/ LOOPER	THREAD COVER
16.	Make two lower pockets. (cont'd)						
	c. Double piped pocket machine construction-when used. (cont'd)						
	The joining seam of the bottom piping piece shall be raised stitched through front and piping piece, and the joining seam of the top piping piece shall be raised stitched through all plies in the closing of the top of pocket. Ends of pocket shall be securely tacked. The finished length of the pocket opening shall be not less than 6-1/4 nor more than 6-3/4 inches long for all sizes.	301		10-14	50 A-3 or 0 nylon	50 A-3 or 0 nylon	
	d. Seam the two lower flaps to fronts 3/16 ± 1/16 inch from overedge top of flap. Sew on top and through the marked line as indicated on the pattern through twill cloth stay and top of hanging pocket. Turn down flap over pocket opening and raise stitch 1/16 to 3/32 inch.	301		10-14	0 silk or 0 nylon	0 silk or 0 nylon	
	e. Bartack each end of pocket opening, the width of the double piping or cord edges, through cords, front, and pocket facing.	Bartack		28 per bartack	50	50	
	f. Press pockets. All pockets shall be pressed individually keeping the front edge of the forepart straight before basting interlining.						

Downloaded from http://www.everyspec.com

NO.	TABLE I. (cont'd) MANUFACTURING OPERATIONS REQUIREMENTS	STITCH TYPE	SEAM AND STITCHING TYPE	STITCHES PER INCH	THREAD NEEDLE	THREAD BOBBIN/ LOOPER	THREAD COVER
17.	Baste interlining to fronts.						
	Finished appearance. The interlining shall be basted to the coat fronts and extend well beyond the armhole and shoulder. The coat front interlinings may be wet-out, dried and pressed to shape prior to performing the following operations.						
	a. Baste fronts to interlining from top of breast flap, through patch pocket, along front dart seam to top edge of lower pocket flap, to front end of pocket opening, and down to bottom of coat.	301 or Hand			commercial		
	b. Tack front, back, and across top of upper pocket stay to interlinings. Tack lower pocket stay to interlining at front top corner, and down front edge of inside hanging pocket on seam allowance as far down as interlining will permit.	301 or Hand		2-4	commercial		
	c. Baste across shoulder allowing room for setting shoulder pads. Baste around armhole and down back edge of interlining. Baste along breakline of lapel and down front edge of interlining to bottom of coat.	301 or Hand			commercial		
	d. The gorge step is the starting-reference point for the placement of the bridle tape. Position bridle tape 1/8 to 1/4 inch behind lapel breakline step at the gorge. Baste bridle tape (in a straight line) to finish 3/8 to 1/2 inch behind the breakline) at a point 1-1/2 inches from bottom of lapel (or front edge of forepart). Top of bridle tape shall be caught in the top collar gorge stitching	301 or Hand			commercial		

NATICK Form 903
1 Dec 76 EDITION OF 1 OCT 76 WILL BE USED UNTIL EXHAUSTED.

Downloaded from http://www.everyspec.com

NO.	TABLE I. (cont'd) MANUFACTURING OPERATIONS REQUIREMENTS	STITCH TYPE	SEAM AND STITCHING TYPE	STITCHES PER INCH	THREAD NEEDLE	THREAD BOBBIN/ LOOPER	THREAD COVER
17.	Baste interlining to fronts. (cont'd)						
	and to finish within 1 to 1-1/2 inches from bottom of lapel. Baste tape even and smooth for a distance of 1-1/2 to 2 inches from gorge, then hold tape taut for a distance of 4 to 5 inches to work in not less than 3/8 inch nor more than 1/2 inch breast fullness and the balance of the tape without tautness or fullness. Tape and interlining shall be stamp marked to assure amount of fullness.						
	e. Pad each lapel of coat with six to eight rows of blindstitching with fullness of interlining between rows of stitching to roll lapels.	103	SSm-8	4-8	70		
		or					
		306	SSm-8	4-8	70	70	
	f. Blindstitch both edges of bridle tape to interlining.	103		4-8	70		
		306		4-8	70	70	
18.	Join side seams.						
	a. Turn under edge of side seam allowance of front parts, 1/4 ± 1/16 inch and blindstitch.	103	SSba-3(a)	3-6	70		
	b. Join side seams with a 5/8 inch seam. Press seams open and flat.	301	SSba-3 (b & c)	10-14	30	30	
		or					
		401	SSba-3 (b & c)	10-14	30	50	
	c. Seam 3/4 inch wide bias strips as follows:	301	SSaa-1	8-12	50	50	

NATICK Form 903
1 Dec 76 EDITION OF 1 OCT 76 WILL BE USED UNTIL EXHAUSTED.

Downloaded from http://www.everyspec.com

NO.	TABLE I. (cont'd) MANUFACTURING OPERATIONS REQUIREMENTS	STITCH TYPE	SEAM AND STITCHING TYPE	STITCHES PER INCH	THREAD		
					NEEDLE	BOBBIN/ LOOPER	COVER
18.	Join side seams. (cont'd)						
	(1) On each front along shoulder seam, 1 to 1-1/2 inches from gorge to within 1/2 to 3/4 inch from armhole.						
	(2) A strip 4 to 4-1/2 inches length on each front adjacent to forepart armhole and 3/8 to 3/4 inch from shoulder.						
	(3) A 5 inch strip to center back neckline.						
	d. Seam 1/4 inch tape around armhole from a point 3/4 inch from shoulder seam on back to 1 inch above notch on fronts, holding tape taut. The tape may extend 3/4 to 1 inch over bias cut strip of twill cloth front, provided no extra tautness is placed above front notch of armhole.	301 or 401	SSaa-1 SSaa-1	8-12 8-12	50 50	50 70	
	or						
	Prior to joining the side seams, seam 1/4 inch tape at armhole from side seam to 1 inch above notch on front, and seam 1/4 inch tape on back of armhole from side seam to a point 3/4 inch from shoulder seam.	301 or 401	SSaa-1 SSaa-1	8-12 8-12	50 50	50 70	

NATICK Form 903
1 Dec 76 EDITION OF 1 OCT 76 WILL BE USED UNTIL EXHAUSTED.

Downloaded from http://www.everyspec.com

NO.	TABLE I. (cont'd) MANUFACTURING OPERATIONS REQUIREMENTS	STITCH TYPE	SEAM AND STITCHING TYPE	STITCHES PER INCH	THREAD		
					NEEDLE	BOBBIN/ LOOPER	COVER
19.	<u>Underpress lapels and fronts, and shape lapels.</u> a. After lapels are padded, the left and right fronts of coat shall be pressed individually, on left and right coat chest pressing machine respectively, to conform to the shape of the body. The front edge of forepart shall be straight. b. Mark lapels, fronts and bottom with lapel, front and bottom shapers. c. Position lapel shaper from point of shoulder to the back edges of front shaper and mark as indicated by shaper. NOTE: Step on front shaper is 1/8 inch wider than step on forepart, this giving cloth allowance for trimming at base of lapel. d. Shape the lapels, fronts and bottom of coat matching side seams and matching vent lengths. Trim ends of side seam allowance and trim vent at bottom of coat. e. The left front edge shall be dressed from bottom notch to base of lapel after the bottoms have been shaped. Trim interlining of lapels, bottoms, and front edges (including the button and buttonhole reinforcements) 1/4 to 3/8 inch from edge. When alternate operation 21.b. is utilized, the twill cloth shall be even with the edge of lapel points.						

NATICK Form 903
1 Dec 76 EDITION OF 1 OCT 76 WILL BE USED UNTIL EXHAUSTED.

Downloaded from http://www.everyspec.com

NO.	TABLE I. (cont'd) MANUFACTURING OPERATIONS REQUIREMENTS	STITCH TYPE	SEAM AND STITCHING TYPE	STITCHES PER INCH	THREAD		
					NEEDLE	BOBBIN/ LOOPER	COVER
19.	Underpress lapels and fronts, and shape lapels. (cont'd) f. The interlining at bottom shall be cut diagonally so that the bottom edge is not caught in the tape stitching. or Marking and shaping of lapels and fronts and trimming of bottom shall be performed with a clicker machine using dies conforming to pattern shapers. NOTE: When using alternate dies for shaping, the lapels, fronts and bottoms must be shaped using only the dies. The left front must be dressed after the bottoms are shaped. When using dies to shape coats that will have the bottom raw edge turned in, the die shall have the vertical edge of bottom step long enough to allow for added 1/4 inch turn in and still maintain the same turn up at bottom as when bottom edge is bound.						
20.	Match and baste facings. Match, fit, and baste facings to coat (first basting) putting in proper lapel and breast fullness. The facings shall be held slightly taut at bottom edges of foreparts. NOTE: The stitches shall be no less than one stitch per inch to assure that the breast fullness and the tautness at bottom edges of forepart are maintained.	Hand or 301			commercial		

NATICK Form 903
1 Dec 76 EDITION OF 1 OCT 76 WILL BE USED UNTIL EXHAUSTED.

Downloaded from http://www.everyspec.com

NO.	TABLE I. (cont'd) MANUFACTURING OPERATIONS REQUIREMENTS	STITCH TYPE	SEAM AND STITCHING TYPE	STITCHES PER INCH	THREAD NEEDLE	THREAD BOBBIN/ LOOPER	THREAD COVER
21.	Tape edges.						
	a. Position tape 1/8 to 3/16 inch from edge of coat and stitch 1/16 to 1/8 inch from edge of tape, from lapel notch, across top of lapel; down front and across bottom to back edge of facing. Tape on lapel edge shall be sewn on loose. Tape across top of step on right forepart shall be omitted.	301	SSab-1	10-14	50	50	
	or						
	A twill cloth stay may be positioned under interlining at top edge and point of lapel and caught in the padding stitches, provided that the straight of the material is positioned across the top edge of lapel. When this type stay is used, the edge tape shall be omitted from across the top edge of lapel from notch to not more than 1/2 inch below lapel point.	301		10-14	50	50	
	b. Blindstitch back edge of tape to interlining on fronts and lapels.	103 or Hand	SSm-1	3-4	70		
	c. Press edges flat and smooth, and pull basting threads. Edge seam shall be pressed open.						
22.	Blind bottom edge of coat.						
	Finished appearance. The binding shall be evenly stitched with no raw edges showing and the fabric caught in the stitching. The binding shall not be tight of full causing puckers, gathers, or pleats.						

NATICK Form 903
1 Dec 76 EDITION OF 1 OCT 76 WILL BE USED UNTIL EXHAUSTED.

Downloaded from http://www.everyspec.com

NO.	TABLE I. (cont'd) MANUFACTURING OPERATIONS REQUIREMENTS	STITCH TYPE	SEAM AND STITCHING TYPE	STITCHES PER INCH	THREAD NEEDLE	THREAD BOBBIN/ LOOPER	THREAD COVER
22.	Bind bottom edge of coat. (cont'd)						
	Bind the bottom edge of the coat with the top raw edge turned in and caught within the binding; binding to extend from vent to 2 to 3 inches beyond side seam. The inside of the binding shall be raw.	301	BSb-1	10-14	50	50	
	or						
	In lieu of binding the portion of bottom edge, specified above, turn in raw edge 1/4 ± 1/16 inch and blindstitch.	103	EF1-1	3-6	70		
23.	Baste coat edges and blindstitch bottom turn-up.						
	Finished appearance. Edges, lapel, points, and corners shall be uniformly worked out. The blindstitching of the turn-up at bottom shall not show through the outer side. Fullness shall be uniformly placed at lapel break to point, when basting along breakline and back edge of facing so that lapel will roll. The lower front edges shall close flat and smooth, without rolling outward.						
	a. Notch corner of lapel and trim around lapel points, bottom corners, and front edges. Turn facing, work out lapels and bottom corners of fronts. The edge basting on the left shall be started in a normal fashion (starting at notch) and shall continue to within approximately 1/2 inch of point of right lapel. Baste peak of right lapel from notch to a point 1 to 2 inches beyond the first basting.	101 or Hand			commercial		

NATICK Form 903
1 Dec 76 EDITION OF 1 OCT 76 WILL BE USED UNTIL EXHAUSTED.

Downloaded from http://www.everyspec.com

NO.	TABLE I. (cont'd) MANUFACTURING OPERATIONS REQUIREMENTS	STITCH TYPE	SEAM AND STITCHING TYPE	STITCHES PER INCH	THREAD NEEDLE	THREAD BOBBIN/ LOOPER	THREAD COVER
23.	Baste coat edges and blindstitch bottom turn-up. (cont'd)						
	NOTE: When basting the facings, the stitches shall be no less than one stitch per inch to maintain the fullness over the breast, the lapel roll, and to hold the lower front edge of forepart so as to roll inward.						
	b. Turn up bottom of coat as indicated by patterns, matching lengths of vent opening, and baste by machine or hand.	101 or Hand			commercial		
	c. Blindstitch complete bottom turn-up of coat.	103		6-8	0 silk or 0 nylon		
		306 or		6-8	0 silk or 0 nylon		
		Hand		6-8	A silk or A nylon		
	d. Baste facings along lapel front (second basting) 1 ± 1/2 inch from edge, along fronts to a point in the line with top edge of breast flaps, holding lower corner of coat rolled in such a manner as to cause lower front edge of forepart to roll inward.	301 or Hand			commercial		
	e. Place a row of basting diagonally from lapel break to the point of lapel, placing fullness in lapel to allow lapel to roll.	301 or Hand			commercial		

Downloaded from http://www.everyspec.com

NO.	TABLE I. (cont'd) MANUFACTURING OPERATIONS REQUIREMENTS	STITCH TYPE	SEAM AND STITCHING TYPE	STITCHES PER INCH	THREAD NEEDLE	THREAD BOBBIN/ LOOPER	THREAD COVER
23.	Baste coat edges and blindstitch bottom turn-up. (cont'd)						
	f. Baste along breakline of lapel, allowing fullness in facing, to permit lapel to roll.	301 or Hand			commercial		
	g. Baste back edge of facing, putting fullness over chest.	301 or Hand			commercial		
24.	Sew shoulder pads.						
	Insert shoulder pads between interlining and padding and tack in position leaving cut-in portion of interlining and chest piece free.	301 or Hand		2-4 2-4	commercial		
25.	Tack facings to interlining.						
	a. Tack the back edge of right facing to the interlining with one row of blindstitching from not more than 2-1/2 inches from shoulder seam to not more than 2 inches above the inside pocket opening. Continue the tacking along outer ply of inside pocket seam allowance and seam allowance of facing, to within 2 inches of bottom of coat (see operation 38.e.).	301 or 103 or Hand	SSm-1 SSm-1 SSm-1	2-4 2-4 2-4	50 70 70	50	
	b. Tack back edge of left facing to interlining with one row of blindstitching from not more than 2-1/2 inches from shoulder seam to within 2 inches of bottom of coat.	301 or 103 Hand	SSm-1 SSm-1 SSm-1	2-4 2-4 2-4	50 70 70	50	

Downloaded from http://www.everyspec.com

NO.	TABLE I. (cont'd) MANUFACTURING OPERATIONS REQUIREMENTS	STITCH TYPE	SEAM AND STITCHING TYPE	*STITCHES PER INCH	THREAD NEEDLE	THREAD BOBBIN/ LOOPER	THREAD COVER
26.	Baste lining.						
	a. Baste pleat in shoulder fronts, and baste around armhole, down side seam, and across bottom.	301 or Hand			commercial		
	b. Turn in the bottom and back edge of lining and baste to body of coat; basting to allow room for felling. The raw edge of lining at bottom hem shall be covered.	301 or Hand			commercial		
	c. Trim gorge and the lining of armholes and shoulders with lining extending 1/4 inch from shoulder point at neck and 1/2 inch at shoulder point at armhole; trim even at the lapel notch to a point extending 1/8 inch from gorge to settle even when lapel is turned and creased. The lining at armhole shall extend no less than 1/2 inch to allow for insertion of sleeve-head and shoulder pads.						
27.	Fell lining.						
	Blindstitch the bottom and sides of front body lining to body of coat. The felling stitches shall not be visible on outside of coat.	Hand		6-8	A silk or A nylon		
		301		6-8	o silk or 0 nylon	0 silk or 0 nylon	
28.	Join shoulder seam.						
	Finished appearance. The fullness on the backs at shoulder seams shall be so placed that shoulder will attain correct shape as indicated by shoulder line on front pattern when finished.						

NATICK Form 903
1 Dec 76 EDITION OF 1 OCT 76 WILL BE USED UNTIL EXHAUSTED.

Downloaded from http://www.everyspec.com

TABLE I. (cont'd)

NO.	MANUFACTURING OPERATIONS REQUIREMENTS	STITCH TYPE	SEAM AND STITCHING TYPE	STITCHES PER INCH	THREAD NEEDLE	THREAD BOBBIN/ LOOPER	THREAD COVER
28.	Join shoulder seam. (cont'd)						
	Join shoulder seams of coat, working in fullness on backs.	301 or 401	SSa-1 SSa-1	10-14 10-14	30 30	30 50	
	or						
	The back shoulder seam may be bias taped to draw in the fullness and pressed before joining of shoulder seams.	301	SSaa-1	8-10	50	50	
29.	Press shoulder seams.						
	Finished appearance. The shoulder seams shall finish flat and smooth without distortion and curved as indicated by the shoulder line on the front patterns.						
	Open and press shoulder seam over a suitable block, holding shoulder short.						
30.	Set shoulder loops.						
	Finished appearance. The shoulder loops shall be of a uniform length and setting.						
	Baste or stitch loop to shoulder at armhole. Trim even with armhole. Point of loop shall extend 1/8 inch beyond edge of the gorge outlet; the back edge of loop 1/2 inch back of the shoulder seam at armhole and the point of loop 1/4 to 3/8 inch in front of shoulder seam.	Hand for 301			commercial		

Downloaded from http://www.everyspec.com

NO.	TABLE 1. (cont'd) MANUFACTURING OPERATIONS REQUIREMENTS	STITCH TYPE	SEAM AND STITCHING TYPE	STITCHES PER INCH	THREAD NEEDLE	THREAD BOBBIN/ LOOPER	THREAD COVER
31.	Baste shoulder.						
	a. Position shoulder interlining and lining, and baste upper part of each shoulder on outside and turn coat to inside. Turn edges of back lining at shoulders and baste upper part of each shoulder, continuing basting across neck at back.	Hand or 301			commercial		
32.	Set collar.						
	Finished appearance. The collar shall finish centered on the back seam with the fullness distributed over the shoulder to conform to and hug the neck.						
	a. Mark outlet at neck with gorge shaper.						
	b. Seam top collar to front facing at gorge to a point not less than 1 inch back of lapel breakline. Notch facing at the end of joining seam.	301	SS-a1	10-14	50	50	
	or						
	A strip of twill cloth, cut on the straight 1/4 to 3/8 inch wide, may be stitched to front and facing gorge seams (bias portion) to prevent stretching and facilitate collar setting.	301	SSaa-1	10-14	50	50	
	c. Spread open seam joining top collar to facing and tack the seam allowance of top collar to front at the gorge from lapel notch to end of seam, catching bridle tape in the tacking.	Hand or 301			50 50	50	

Downloaded from http://www.everyspec.com

NO.	TABLE I. (cont'd) MANUFACTURING OPERATIONS REQUIREMENTS	STITCH TYPE	SEAM AND STITCHING TYPE	STITCHES PER INCH	THREAD NEEDLE	THREAD BOBBIN/ LOOPER	THREAD COVER
32	Set collar. (cont'd)						
	d. Baste undercollar to coat, putting in fullness over the shoulder.	Hand or 301			50 50	 50	
	e. Tack outlet at neck to undercollar interlining by hand or blindstitch machine	Hand or 103 or 306	SSm-1 SSm-1 SSm-1	2-4 3-4 3-4	70 70 70	 70	
	f. Turn under lower edge of top collar and baste across neck.	Hand or 301			50 50	 50	
	g. Fell the lower edge of undercollar to coat by hand or machine. The raw edge of the undercollar shall be inclosed within the felling.	Hand or	LSa-1	8-12	C silk or C nylon		
		Machine (duplicate hand felling) or 306	LSa-1 LSa-1	6-10 8-12	A silk or B nylon 0 silk or 0 nylon	 0 silk or 0 nylon	
	h. Blind tack corners of collar and lapels. the tacking shall not show on outside of coat.	Hand		6-8	C silk or C nylon		

Downloaded from http://www.everyspec.com

TABLE I. (cont'd)

NO.	MANUFACTURING OPERATIONS REQUIREMENTS	STITCH TYPE	SEAM AND STITCHING TYPE	STITCHES PER INCH	THREAD NEEDLE	THREAD BOBBIN/ LOOPER	THREAD COVER
32.	Set collar. (cont'd)						
	i. Fell the lower edge of top collar from gorge seam to gorge seam by hand.	Hand		8-10	C silk or C nylon		
	or						
	In lieu of operations 32.e., f. and i., machine stitch lower edge of top collar across neck from gorge seam to gorge seam.	301	Similar to SSbd-1	10-14	50	50	
33.	Stitch front edges and collar.						
	Stitch edges of lapels, fronts, and collar 1/16 to 3/32 inch from edge, stitching to extend across bottom the width of the facings.	301	SSe-2	10-14	0 silk or 0 nylon	0 silk or 0 nylon	
34.	Set in sleeve.						
	Finished appearance. The sleeves shall set uniformly with fullness at front and back armhole distributed without pleats or puckers.						
	Set sleeves matching front sleeve notch with front armhole notch and back arm seam with back armhole notch, distributing the fullness in the and back of armhole evenly and catching the end of shoulder loops in the seam.	301	SSa-1	10-14	30	30	
		or 401	SSa-1	10-14	30	50	

NATICK Form 903
1 Dec 76 EDITION OF 1 OCT 76 WILL BE USED UNTIL EXHAUSTED.

Downloaded from http://www.everyspec.com

TABLE I. (cont'd)

NO.	MANUFACTURING OPERATIONS REQUIREMENTS	STITCH TYPE	SEAM AND STITCHING TYPE	STITCHES PER INCH	THREAD		
					NEEDLE	BOBBIN/ LOOPER	COVER
35.	Press armhole seam.						
	Finished appearance. The armhole seam pressing shall not stretch or distort the armhole. The portion of the shoulder loop seam shall not be pressed back. Shoulder loop shall remain smooth and flat.						
	Press seam open across top from 1 $\pm$1/4 inches above back arm seam to not less than 3 or more than 4 inches forward of shoulder seam, or the seam across top may be pressed toward sleeve in the same direction as loop.						
36.	Baste and tack armholes.						
	a. Baste around outside armholes, positioning lining, yoke and shoulder pad and back of shoulder in place, putting fullness of yoke in place; or back part of armholes may be basted from the lining side. Baste balance of shoulder lining.	Hand or 301			commercial		
	b. Tack all around armhole by hand or machine catching the shields at base of armhole.	301 or Hand		4-6 4-6	30 30	30	
	NOTE: (1) When armhole is tacked by machine, a loosely formed and elastic stitch shall be used, and operation 36.c. may be omitted.						

Downloaded from http://www.everyspec.com

TABLE I. (cont'd)

NO.	MANUFACTURING OPERATIONS REQUIREMENTS	STITCH TYPE	SEAM AND STITCHING TYPE	STITCHES PER INCH	THREAD NEEDLE	THREAD BOBBIN/ LOOPER	THREAD COVER
36.	Baste and tack armholes. (cont'd)						
	(2) When tacking is done by hand, the tacking shall be backstitched every other stitch from front notch, around top of armhole to back notch.						
	c. Tack across base of armhole from sleeve notch on front to side seam.	301	SSa-1	4-6	30	30	
	d. Trim away excess lining and interlining.						
	e. Tack sleeve head wadding to top of armhole from front sleeve notch to back seam of sleeve. The sleeve head wadding shall be positioned with folded edge adjacent to edge of armhole, backing cloth side against sleeve, and in such a manner as to cause the wadding to fold on itself. The tacking shall be adjacent to armhole seam. When armhole is tacked by machine, the sleeve head wadding shall be attached in the armhole tacking operation.	Hand or 301		4-6 4-6	30 white 30	30	
37.	Press left front.						
	Press left front prior to the buttonhole operation.						
38.	Complete hand felling.						
	a. Fell lining all around armholes and backstitch pit of armhole from forearm seam of sleeve to side seam. The sleeve lining shall be seam on seam with sleeve. The sleeve lining may be stitched to the armhole on the inside from forearm seam of sleeve to the back arm seam across undersleeve.	Machine (duplicate hand type felling) or Hand or		6-10 6-10	A silk or 0 nylon C silk or		

NATICK Form 903
1 Dec 76 EDITION OF 1 OCT 76 WILL BE USED UNTIL EXHAUSTED.

Downloaded from http://www.everyspec.com

TABLE I (cont'd)

NO.	MANUFACTURING OPERATIONS REQUIREMENTS	STITCH TYPE	SEAM AND STITCHING TYPE	STITCHES PER INCH	THREAD NEEDLE	THREAD BOBBIN/ LOOPER	THREAD COVER
38.	Complete hand felling.						
	NOTE: Machine duplicated hand felling stitches shall be equal to or better than actual hand type felling stitches. When using the machine duplicated hand type felling stitches shall be over the folded edge of the sleeve lining.	301 and Machine (duplicate hand type felling) or 301 and Hand	SSa-1 SSa-1	10-14 6-10 10-14 6-10	C nylon 50 A silk or 0 nylon 50 C silk or C nylon	50 50	
	b. Fell lining of shoulder, yoke at side seams, corners of linings and facings at bottom, and vent corners.	Hand		8-10	A or C silk or A or C nylon		
	c. Fell the sleeve lining turn-up to the sleeve.	Hand or 306		6-8 6-8	A or C silk A or C nylon 0 silk or 0 nylon	0 silk or 0 nylon	
	d. Tack bottom edge of armhole shields on the underside to lining.	Hand		6-8	A or C silk or A or C nylon		

NATICK Form 903
1 Dec 76 EDITION OF 1 OCT 76 WILL BE USED UNTIL EXHAUSTED.

Downloaded from http://www.everyspec.com

TABLE I. (cont'd)

NO.	MANUFACTURING OPERATIONS REQUIREMENTS	STITCH TYPE	SEAM AND STITCHING TYPE	STITCHES PER INCH	THREAD		
					NEEDLE	BOBBIN/ LOOPER	COVER
38.	Complete hand felling. (cont'd)						
	e. Front edge of inside pocket may be tacked by hand in lieu of operations 25.a., and 12.j. Tack through facing pocket seam allowance catching the interlining, from corner of pocket opening and down for a distance not less than 5 inches.	Hand		2-4	A or silk or A or nylon	C C	
39.	Clean coat.						
	a. Remove all basting threads.						
	b. All ends of stitching shall be trimmed and loose threads removed from the coats.						
	c. All spots, and stains and shade or size markings shall be removed without damage to the material.						
40.	Mark and make buttonholes.						
	Finished appearance. The top front buttonhole shall be positioned in horizontal alignment with center of eyelets in breast pocket flaps, and the bottom buttonhole shall be positioned 3/4 to 1 inch above top edge of lower pocket flaps (see Fig. 2, View B). The remaining two buttonholes shall be evenly spaced between top and bottom buttonholes.						
	a. Mark left for four buttonholes as indicated in finished appearance paragraph.						

Downloaded from http://www.everyspec.com

TABLE I (cont'd)

NO.	MANUFACTURING OPERATIONS REQUIREMENTS	STITCH TYPE	SEAM AND STITCHING TYPE	STITCHES PER INCH	THREAD NEEDLE	THREAD BOBBIN/ LOOPER	THREAD COVER
40.	Mark and make buttonholes (cont'd)						
	b. Make four buttonholes in left front as marked with the inside edge of the eyelet 5/8 to 3/4 inch from the finished edge of the coat. The cut of the finished buttonhole after tacking shall measure not less than 1 inch and not more than 1-1/8 inches (see 3.5.2).	Buttonhole Machine or		63-70 per 1 inch buttonhole and 70-80 per 1-1/8 inch buttonhole	C or B nylon or B nylon	B or B nylon F nylon	
		Hand		70-80 per 1-1/8 inch buttonhole	10 silk or 10 nylon		
41.	Press coat.						
	Finished appearance. The coat shall be pressed smooth and flat, without any gloss or pressing impressions. The top of sleeves shall be blocked and pressed having a rolled effect at front and back. Left front bottom edge shall be even with right, and shall roll inward below bottom front button when buttoned on model form (see Fig. 2, View D).						
	a. Place coat on hanger after first pressing operation until completion of pressing.						
	b. The shoulders shall be pressed on a left and right shoulder pressing machine.						

Downloaded from http://www.everyspec.com

TABLE I. (cont'd)

NO.	MANUFACTURING OPERATIONS REQUIREMENTS	STITCH TYPE	SEAM AND STITCHING TYPE	STITCHES PER INCH	THREAD		
					NEEDLE	BOBBIN/ LOOPER	COVER
41.	Press coat. (cont'd) c. Press edges of lapels, fronts, collar, and bottom of coat on edge pressing machine. d. Press right and left fronts on right and left chest machine respectively. e. Press balance of fronts, side seams, and back on body machine. f. Press collar on collar machine stretching outer edge of collar over shoulder area when required. The pressed crease at breakline of lapel shall extend 2 to 2-1/2 inches below the gorge seam. The lapel and gorge shall be checked with the finished lapel shaper for the proper width. g. Press armhole and shoulders on armhole machine. h. Press armhole solid from the inside, creasing armhole from not less than 1/2 inch above backarm seam to not less than 4 inches from shoulder seam. The armpit and back of armhole shall be held short and pressed flat. i. Roll press sleeves and lapels, starting 2 to 2-1/2 inches below the gorge seam; do not crease.						

NATICK Form 903
1 Dec 76 EDITION OF 1 OCT 76 WILL BE USED UNTIL EXHAUSTED.

Downloaded from http://www.everyspec.com

TABLE I (cont'd)

NO.	MANUFACTURING OPERATIONS REQUIREMENTS	STITCH TYPE	SEAM AND STITCHING TYPE	STITCHES PER INCH	THREAD		
					NEEDLE	BOBBIN/ LOOPER	COVER
42.	Finish pressing.						
	a. Press coat lining smooth.						
	b. Remove gloss, wrinkles, creases, spots, and all pressing impressions.						
	c. Block armhole and shrink top sleeve.						
	d. Brush coat and examine.						
	e. Press any wrinkles missed or caused by previous pressing operations.						
43.	Mark coat for buttons.						
	a. Mark the location of the four buttons on the right front of coat as indicated by patterns, to correspond with buttonholes on left front. Buttons shall be sewn 1-5/8 to 1-7/8 inches from front edge. Buttons shall be in vertical alignment.						
	b. Mark the location of each button on each pocket to correspond to eyelet end of buttonhole on each pocket flap.						
	c. Mark the position of each button on each shoulder to correspond to buttonhole on each shoulder loop.						

Downloaded from http://www.everyspec.com

TABLE I. (cont'd)

NO.	MANUFACTURING OPERATIONS REQUIREMENTS	STITCH TYPE	SEAM AND STITCHING TYPE	STITCHES PER INCH	THREAD NEEDLE	THREAD BOBBIN/ LOOPER	THREAD COVER
44.	Sew on buttons.						
	Finished appearance. The buttons shall be securely sewn to the coat and shall properly engage buttonholes in left front, shoulder loops and upper and lower pocket flaps. All buttons, when sewn by hand shall be backstitched with not less than two stitches and the ends of the thread shall be hidden.						
	a. Sew a 36 - line button at each of the marks on the right front. The button shall be sewn through all plies of material with the eagle in an upright position.	301 or		14-16 per button	30	30	
		101 or		14-16 per button	30		
		Hand or		4-6 per button double thread	30		
		801 (see fig. 5)		12 (min) per button (1 deep set)	5 nylon		
	b. Sew a 25 - line button at the mark on each upper and lower pocket, with the eagle in an upright position.	301 or		14-16 per button	30	30	
		101 or		14-16 per button	30		
		Hand or		4-6 per button double thread	30		
		801 (see fig. 5)		7 (min) per button (1 deep set)	5 nylon		

NATICK Form 903
1 Dec 76 EDITION OF 1 OCT 76 WILL BE USED UNTIL EXHAUSTED.

Downloaded from http://www.everyspec.com

TABLE I. (cont'd)
MANUFACTURING OPERATIONS REQUIREMENTS

NO.		STITCH TYPE	SEAM AND STITCHING TYPE	STITCHES PER INCH	THREAD NEEDLE	THREAD BOBBIN/ LOOPER	THREAD COVER
44.	Sew on buttons. (cont'd)						
	or						
	In lieu of sewing buttons to the pockets the buttons may be attached to the flaps with toggles.						
	c. Sew a 25 - line button at the mark on each shoulder with the spread wings of the eagle in line with shoulder seam, and head in an upright position. The button shall be positioned so that the loop lies flat without bulging. The rim of the button shall be 1/4 ± 1/8 inch from collar edge.	301 or 101 or Hand or 801 (see fig. 5)		14-16 per button 14-16 per button 4-6 per button double thread 7 (min) per button (1 deep set)	30 30 30 5 nylon		

NATICK Form 903
1 Dec 76 EDITION OF 1 OCT 76 WILL BE USED UNTIL EXHAUSTED.

Downloaded from http://www.everyspec.com

Downloaded from http://www.everyspec.com

3.7 Finished measurements. Finished measurements shall conform to table II.

TABLE II. Table of measurements

Size	1/2 breast 1/	Sleeve length 2/	Back length 3/
Extra short	Inches	Inches	Inches
34	18-3/4	15	26-3/4
35	19-1/4	15-1/8	27
36	19-3/4	15-1/4	27-1/4
37	20-1/4	15-3/8	27-1/2
38	20-3/4	15-3/8	27-3/4
39	21-1/4	15-1/2	28
40	21-3/4	15-1/2	28-1/4
41	22-1/4	15-1/2	28-3/8
42	22-3/4	15-1/2	28-1/2
43	23-1/4	15-1/2	28-5/8
Tolerances:			
Plus	1/2	1/2	1/2
Minus	1/2	3/8	1
Short	Inches	Inches	Inches
32	17-3/4	15-3/4	28-1/4
33	18-1/4	15-7/8	28-1/2
34	18-3/4	16	28-5/8
35	19-1/4	16-1/8	28-7/8
36	19-3/4	16-1/4	29
37	20-1/4	16-3/8	29-1/8
38	20-3/4	16-3/8	29-3/8
39	21-1/4	16-1/2	29-1/2
40	21-3/4	16-1/2	29-3/4
41	22-1/4	16-1/2	29-7/8
42	22-3/4	16-1/2	30
43	23-1/4	16-1/2	30-1/8
44	23-3/4	16-1/2	30-3/8
46	24-3/4	16-1/2	30-1/2
48	25-3/4	16-1/2	30-3/4
50	26-3/4	16-1/2	31-1/8
Tolerances:			
Plus	1/2	1/2	1/2
Minus	1/2	3/8	1

Downloaded from http://www.everyspec.com

TABLE II. Table of measurements (cont'd)

Size	1/2 breast 1/	Sleeve length 2/	Back length 3/
Regular	Inches	Inches	Inches
30	16-3/4	16-1/2	29-3/8
31	17-1/4	16-5/8	29-1/2
32	17-3/4	16-3/4	29-5/8
33	18-1/4	16-7/8	29-3/4
34	18-3/4	17	30
35	19-1/4	17-1/8	30-1/8
36	19-3/4	17-1/4	30-1/4
37	20-1/4	17-3/8	30-3/8
38	20-3/4	17-3/8	30-5/8
39	21-1/4	17-1/2	30-3/4
40	21-3/4	17-1/2	31
41	22-1/4	17-1/2	31-1/8
42	22-3/4	17-1/2	31-1/4
43	23-1/4	17-1/2	31-3/8
44	23-3/4	17-1/2	31-1/2
46	24-3/4	17-1/2	31-3/4
48	25-3/4	17-1/2	32
50	26-3/4	17-1/2	32-3/8
Tolerances:			
Plus	1/2	1/2	1/2
Minus	1/2	3/8	1
Long	Inches	Inches	Inches
33	18-1/4	18-1/8	31-1/8
34	18-3/4	18-1/4	31-3/8
35	19-1/4	18-3/8	31-1/2
36	19-3/4	18-1/2	31-3/4
37	20-1/4	18-5/8	32
38	20-3/4	18-5/8	32-1/8
39	21-1/4	18-3/4	32-1/4
40	21-3/4	18-3/4	32-1/2
41	22-1/4	18-3/4	32-5/8
42	22-3/4	18-3/4	32-3/4
43	23-1/4	18-3/4	32-7/8
44	23-3/4	18-3/4	33
46	24-3/4	18-3/4	33-1/4

Downloaded from http://www.everyspec.com

TABLE II. Table of measurements (cont'd)

Size	1/2 breast 1/	Sleeve length 2/	Back length 3/
Long	1. hes	Inches	Inches
48	25-3/4	18-3/4	33-1/2
50	26-3/4	18-3/4	33-3/4
Tolerances:			
Plus	1/2	1/2	1/2
Minus	1/2	3/8	1
Extra long	Inches	Inches	Inches
36	19-3/4	20	33-1/2
37	20-1/4	20-1/8	33-3/4
38	20-3/4	20-1/8	33-7/8
39	21-1/4	20-1/4	34
40	21-3/4	20-1/4	34-1/4
41	22-1/4	20-1/4	34-3/8
42	22-3/4	20-1/4	34-1/2
43	23-1/4	20-1/4	34-5/8
44	23-3/4	20-1/4	34-3/4
46	24-3/4	20-1/4	35
48	25-3/4	20-1/4	35-1/4
Tolerances:			
Plus	1/2	1/2	1/2
Minus	1/2	3/8	1

1/ One half breast measurement taken with coat fully buttoned, from folded edge to folded edge in line with base of armhole.

2/ Sleeve length measurement taken from armhole seam, along inseam to bottom of sleeve.

3/ Back length measurement taken along center seam from undercollar seam to bottom of coat.

3.8 Workmanship. The finished coat shall conform to the quality of product established by this document.

Downloaded from http://www.everyspec.com

4. QUALITY ASSURANCE PROVISIONS

4.1 Responsibility for inspection. Unless otherwise specified in the contract or purchase order, the contractor is responsible for the performance of all inspection requirements as specified herein. Except as otherwise specified in the contract or purchase order, the contractor may use his own or any other facilities suitable for the performance of the inspection requirements specified herein, unless disapproved by the Government. The Government reserves the right to perform any of the inspections set forth in the document where such inspections are deemed necessary to assure supplies and services conform to prescribed requirements.

4.1.1 Certificate of compliance. Where certificates of compliance are submitted, the Government reserves the right to check test such items to determine the validity of the certification.

4.2 Quality conformance inspection. Unless otherwise specified, sampling for inspection shall be performed in accordance with MIL-STD-105.

4.2.1 Component and material inspection. In accordance with 4.1, components and materials shall be inspected in accordance with all the requirements of referenced documents unless otherwise excluded, amended, modified, or qualified in this document or applicable purchase document.

4.2.1.1 Certification. A certificate of compliance will be acceptable as evidence that the tape for staying the front edges of the coat conforms to the cross cut, width, and edge treatment requirements in 3.2.13.

4.2.2 In-process inspection. Examination shall be made of the following operations to establish conformance to specified requirements. Wherever nonconformance is noted, correction shall be made to the items affected, the lot in progress, and to the operation. Parts which cannot be corrected shall be removed from production.

a. Visual and dimensional examination of the working patterns to determine that they conform to the Government patterns in all respects (see 3.4).

b. Visual and dimensional examination of the cut parts to determine that they are properly cut with respect to size, material directional requirements (warp and filling); that location marks and notches on the parts are located correctly; and that parts containing material defects and damages have been removed (see table I, operations 1 thru 4.).

c. Visual examination of cut parts during assembly of the coat to determine proper shade matching (see operation 5., table I).

Downloaded from http://www.everyspec.com

d. Visual examination of pressed fronts to determine that pressing is performed correctly and proper pressing machine is used (see operation 19.a., table I.).

e. Visual examination of collar gorge seam to determine seam is tacked open and the bridle is caught in the tacking (see operation 32.c., table I). 1/

f. Visual examination of sleeves (prior to basting lining to armhole, side seams and bottom of coat) to determine that sleeves are set uniformly with fullness at armhole distributed without pleats or puckers (see table I, operation 34.). 1/

g. Visual examination of taped front and back armholes to determine that armhole tape is stitched correctly without any indication of a stretched back and front armhole (see table I. operation 18.c.(2) and 18.d. 1/

1/ For this examination the contractor shall establish an inspection station. Periodic examination shall be made during each work shift to determine that the requirements are being met.

4.2.2.1 "In-process examination of coat fronts". The right and left coat fronts after stitching darts, making lower pockets, and attaching breast pockets, pocket flaps, coat front interlinings and bridle tape shall be examined for the defects listed below. The lot shall be all pairs (matched right and left) of coat fronts submitted for inspection at one time. The sample unit shall be one pair of coat fronts (right and left). The inspection level shall be II and the acceptable quality level (AQL), expressed in terms of defects per hundred units, shall be 2.5.

Examine	Defect
Darts, underarm and waist	a. One or more omitted. b. One or more not as specified. c. One or more not pressed as specified
Front interlining	a. Not attached or positioned as specified. b. Basting and tacking of front to interlining omitted or insecure. c. Padding of lapel not blind stitched with eight rows of stitching with fullness on the interlining between each row of blind-stitching.
Breast pockets	One or more out of alignment or not parallel with front edge.

Downloaded from http://www.everyspec.com

Examine	Defect
Breast and lower pocket flaps	One or more out of alignment or not parallel with front edge.
Bridle tape	a. Omitted. b. Not held taut causing lapel breakline to be stretched. c. Misplaced at gorge: - more than 3/8 inch behind lapel breakline. - onto or extending beyond breakline on lapel side. d. Misplaced at bottom lapel breakline: - More than 5/8 inch behind breakline. - onto or extending beyond breakline on lapel side. - Not within 1 to 1-1/2 inches from bottom of lapel. e. Tape and interlining not stamp marked for fullness of bridle.

4.2.2.2 In-process examination of fronts and backs after joining. The fronts and backs after joining shall be examined for the defects listed below. The lot shall be all joined fronts and backs submitted for inspection at one time. The sample unit shall be one joined front and back. The inspection level shall be II and the AQL, expressed in terms of defects per hundred units, shall be 1.5.

Examine	Defect
Fronts, lapels, and bottoms	a. One or more not shaped in accordance with shaper patterns. b. Interlining of lapels, bottoms, and front edges not trimmed as specified.
Left front	Not dressed from bottom notch to base of lapel after the bottoms are shaped.

4.2.3 Point count inspection. Sampling and inspection provisions for end item examination, dimensional examination, and packaging inspection shall be performed in accordance with MIL-STD-1490 except that for end item examination, the following additional defects and point values shall apply:

Downloaded from http://www.everyspec.com

	Point value
1. Bridle tape not held taut causing breakline not to finish flat.	3
2. Bridle tape misplaced at gorge:	
a. - more than 3/8 inch behind lapel breakline.	3
b. - more than 5/8 inch behind lapel breakline.	*
c. - onto or extending beyond breakline on lapel side.	*
3. Bridle tape misplaced at bottom lapel breakline:	
a. - more than 5/8 inch behind breakline.	3
b. - more than 7/8 inch behind breakline.	*
c. - onto or extending beyond breakline on lapel side.	*
d. - not within 1 to 1-1/2 inches from bottom of lapel.	2

(An asterisk (*) indicates a selected defect).

4.2.4 Palletization examination. An examination shall be made to determine that the palletization complies with the section 5 requirements. Defects shall be scored in accordance with the list below. The sample unit shall be one palletized unit load fully packaged. The lot size shall be the number of palletized unit loads in the inspection lot. The inspection level shall be S-1 and the AQL, expressed in terms of defects per hundred units, shall be 6.5.

Examine	Defect
Finished dimensions	Length, width, or height exceeds specified maximum requirement.
Palletization	Not as specified. Pallet pattern not as specified. Interlocking of loads not as specified. Load not bonded with required straps as specified.
Weight	Exceeds maximum load limits.
Marking	Omitted; incorrect; illegible; of improper size, location, sequence, or method of application.

5. PACKAGING

5.1 Preservation. Preservation shall be level A or Commercial as specified (see 6.2).

Downloaded from http://www.everyspec.com

5.1.1 Level A.

5.1.1.1 Coats (classes 1 and 2).

5.1.1.1.1 Folding. Each coat shall be laid back down and a paperboard insert conforming to figure 4 placed in the coat so as to fit snugly into the collar and shoulder area. The buttonhole front shall overlap the button front. The sleeves shall be positioned full length so that the sleeve ends rest over the pockets. The coat shall then be folded in half by bringing the bottom up even with the top of collar so that the folded coat measures not more than 21 by 16 inches.

5.1.1.1.2 Arangement. Five folded coats of one type, class and size only, stacked one on another with collars alternated, shall be placed in an intermediate fiberboard box as hereinafter specified.

5.1.1.1.3 Intermediate packing. The intermediate fiberboard box shall conform to style FTC, type CF, variety SW, class domestic, grade 200 of PPP-B-636. Inside dimensions of the box shall be 21 inches in length, 16 inches in width, and 6 inches in depth. The box closure shall be secured with 3 inch minimum width gummed paper tape conforming to type III, grade B of PPP-T-45 applied at the center of the length opening and extending along the bottom and up the sides at least 3 inches.

5.1.1.2 Coat (class 3). Coats shall be folded as specified in 5.1.1.1.1.

5.1.1.3 Uniforms (classes 1 and 2). A uniform shall consist of a matching coat and trousers and, when procured as such, shall be folded together as follows.

5.1.1.3.1 Uniform folding. The coat shall be folded as specified in 5.1.1.1.1. Fold each pair or trousers so that the length dimension is approximately 24-1/2 inches. Place the folded coat between the fold of the trousers. The folded uniform shall measure not more than 24-1/2 by 16 inches.

5.1.1.3.2 Uniform arrangement. Five folded uniforms of one type, class, and size only, stacked one on another, shall be placed in an intermediate fiberboard box as hereinafter specified.

5.1.1.3.3 Intermediate packing. The intermediate fiberboard box shall conform to style, FTC, type CF, variety SW, class domestic, grade 200 of PPP-B-636. Inside dimensions of the box shall be 25 inches in length, 16 inches in width, and 9 inches in depth. The box closure shall be secured with 3 inch minimum width gummed paper tape conforming to type III, grade B of PPP-T-45 applied at the center of the length opening and extending along the bottom and up the sides at least 3 inches.

Downloaded from http://www.everyspec.com

5.1.1.4 Uniforms (class 3). Uniforms shall be folded as specified in 5.1.1.3.1.

5.1.2 Commercial. Coats or uniforms of one type, class, and size only, shall be preserved in accordance with ASTM D 3951.

5.2 Packing. Packing shall be level A, B, or Commercial as specified (see 6.2).

5.2.1 Level A packing.

5.2.1.1 Coats (classes 1 and 2). Fifteen coats of one type, class and size only, preserved as specified in 5.1, shall be packed in a fiberboard shipping container conforming to style RSC, Grade V2s of PPP-B-636. Level A intermediate packs shall be packed flat, three in depth within a shipping container. Inside dimensions of each shipping container shall approximate 23 inches in length, 18 inches in width, and 19 inches in depth. Approximate dimensions are furnished as a guide only. Each shipping container shall be closed in accordance with method III, waterproofed in accordance with method V, and reinforced as specified in the appendix of PPP-B-636, except that the inspection shall be in accordance with 4.2.3. Toward the end of the contract or when there are less than the required amount per container of the same size, mixed sizes of the same class may be packed within the same container.

5.2.1.2 Coats (class 3). Fifteen coats of one type and size only, preserved as specified in 5.1.1.2, shall be packed in a fiberboard shipping container shall be fitted with a box liner conforming to type CF, class weather-resistant, variety DW, grade V15c of PPP-B-636. Inside dimensions of each shipping container shall approximate 22 inches in length, 17 inches in width, and 13 inches in depth. Approximate dimensions are furnished as a guide only. Level A unit packs shall be packed flat, fifteen in depth and alternated collar to bottom. Prior to packing, the shipping container shall be provided with an interior case liner bag made from polyethylene film having a nominal thickness of 0.003 inches. The open top of the case liner bag shall be of sufficient length to completely cover the stack of coats when closed. The liner shall be closed by folding the top down onto the stack and securing with pressure sensitive tape or by means of a mechanical tie prior to closure of the container. Each shipping container shall be closed in accordance with method III, waterproofed in accordance with method V, and reinforced as specified in the appendix of PPP-B-636, except that the inspection shall be in accordance with 4.2.3. Toward the end of the contract, or when there are less than the required amount per container of the same size, mixed sizes may be packed within the same container.

5.2.1.3 Uniforms (classes 1 and 2). Ten uniforms of one type, class, and size only, preserved as specified in 5.1, shall be packed in a fiberboard shipping container shall approximate 27 inches in length, 18 inches in width, and 19 inches in depth. Approximate dimensions are furnished as a guide only. Each shipping container shall be closed in accordance with method III,

Downloaded from http://www.everyspec.com

waterproofed in accordance with method V, and reinforced as specified in the appendix of PPP-B-636, except that the inspection shall be in accordance with 4.2.3. Toward the end of the contract or when there are less than the required amount per container of the same size, mixed sizes of the same class may be packed within the same container.

5.2.1.4 Uniforms (class 3). Ten uniforms of one type and size only, preserved as specified in 5.1.1.4, shall be packed in a fiberboard shipping container shall be fitted with a box liner conforming to type CF, class weather-resistant, variety DW, grade V15c of PPP-B-636. Inside dimensions of each shipping container shall approximate 25-1/2 inches in length, 17 inches in width, and 13 inches in depth. Approximate dimensions are furnished as a guide only. level A unit packs shall be packed flat, ten in depth. Prior to packing, the shipping container shall be provided with an interior case liner bag made from polyethylene film having a nominal thickness of 0.003 inches. The open top of the case liner bag shall be of sufficient length to completely cover the stack of uniforms when closed. The liner shall be closed by folding the top down onto the stack and securing with pressure sensitive tape or by means of a mechanical tie prior to closure of the container. Each shipping container shall be closed, in accordance with method III, waterproofed in accordance with method V, and reinforced as specified in the appendix of PPP-B0636, except that the inspection shall be in accordance with 4.2.3. Toward the end of the contract, or when there are less than the required amount per container of the same size, mixed sizes may be packed within the same container.

5.2.2 Level B packing.

5.2.2.1 Coats (classes 1 and 2). Fifteen coats of one type, class and size only, preserved as specified in 5.1, shall be packed in a fiberboard shipping container conforming to style RSC, type CF (variety SW) or type SF, class domestic, grade 275 of PPP-B-636. Level A intermediate packs shall be packed flat three in depth within a shipping container. Inside dimensions of the shipping container shall approximate 23 inches in length, 18 inches in width, and 19 inches in depth. Approximate dimensions are furnished as a guide only. Each shipping container shall be closed in accordance with method II as specified in the appendix of PPP-B-636, except that the inspection shall be in accordance with 4.2.3. Toward the end of the contract, or when there are less than the required amount per container of the same size, mixed sizes of the same class may be packed within the same container.

5.2.2.2 Coats (class 3). Fifteen coats of one type and size only, preserved as specified in 5.1 shall be packed in a fiberboard shipping container conforming to style RSC-L, type CF (variety SW) or SF, class domestic, grade 275 of PPP-B-636. The inside of each shipping container shall be fitted with a box liner conforming to type CF, class domestic, variety DW, grade 275 of PPP-B-636. Inside dimensions of each shipping container shall approximate 22 inches in length, 17 inches in width, and 13 inches in depth. Approximate dimensions are

Downloaded from http://www.everyspec.com

furnished as a guide only. Level A unit packs shall be packed flat, fifteen in depth and alternated collar to bottom. Prior to packing, the shipping container shall be provided with an interior case liner bag made from polyethylene film having a nominal thickness of 0.003 inches. The open top of the case liner bag shall be of sufficient length to completely cover the stack of coats when closed. The liner shall be closed by folding the top down onto the stack and securing with pressure sensitive tape or by means of mechanical tie prior to closure of the container. Each shipping container shall be closed in accordance with method II as specified in the appendix of PPP-B-636 except that the inspection shall be in acc rdance with 4.2.3. Toward the end of the contract, or when there are less than the required amount per container of the same size, mixed sizes may be packed within the same container.

5.2.2.3 Uniforms (classes 1 and 2). Ten uniforms of one type, class and size only, preserved as specified in 5.1, shall be packed in a fiberboard shipping container conforming to style RSC, type CF (variety SW) or SF, class domestic, grade 275 of PPP-B-636. Level A intermediate packs shall be packed flat, two in depth within a shipping container. Inside dimensions of the shipping container shall approximate 27 inches in length, 18 inches in width, and 19 inches in depth. Approximate dimensions are furnished as a guide only. Each shipping container shall be closed in accordance with method II as specified in the appendix of PPP-B-636, except that inspection shall be in accordance with 4.2.3. Toward the end of the contract or when there are less than the required amount per container of the same size, mixed sizes of the same class may be packed within the same container.

5.2.2.4 Uniforms (class 3). Ten uniforms of one type and size only, preserved as specified in 5.1, shall be packed in a fiberboard shipping container conforming to style RSC-L, type CF (variety SW) or SF, class domestic, grade 275 of PPP-B-636. The inside of each shipping container shall be fitted with a box liner conforming to type CF, class domestic, variety DW, grade 275 of PPP-B-636. Inside dimensions of each shipping container shall approximate 25-1/2 inches in length, 17 inches in width, and 13 inches in depth. Approximate dimensions are furnished as a guide only. Level A unit packs shall be packed flat, ten in depth. Prior to packing, the shipping container shall be provided with an interior case liner bag made from polyethylene film having a nominal thickness of 0.003 inches. The open top of the case liner bag shall be of sufficient length to completely cover the stack of uniforms when closed. The liner shall be closed by folding the top down onto the stack and securing with pressure sensitive tape or by means of a mechanical tie prior to closure of the container. Each shipping container shall be closed in accordance with method II and specified in the appendix of PPP-B-636, except that the inspection shall be in accordance with 4.2.3. Toward the end of the contract, or when there are less than the required amount per container of the same size, mixed sizes may be packed within the same container.

Downloaded from http://www.everyspec.com

5.2.2.5 Weather-resistant fiberboard shipping container. When specified (see 6.2), the shipping container shall be a grade V3c, V3s, or V4s fiberboard box fabricated in accordance with PPP-B-636 and closed in accordance with method III as specified in the appendix of PPP-B-636, except that the inspection shall be in accordance with 4.2.3.

5.2.3 Commercial. Coats or uniforms of one type, class, and size only, preserved as specified in 5.1, shall be packed in accordance with ASTM D 3951.

5.3 Marking. In addition to any special marking required by the contract or purchase order, intermediate packs and shipping containers shall be marked in accordance with MIL-STD-129 or ASTM D 3951, as applicable.

5.3.1 Labels, mixed sizes. Each shipping container, packed with mixed sizes of the same class, shall have securely attached to the end and side, directly under the printing or stenciling, a white paper label 5 by 4 inches, with the words "MIXED NSN's" plainly stamped or printed thereon, and under these words shall be legibly stamped or printed the correct quantity and NSN's contained therein.

5.4 Palletization. When specified (see 6.2), coats, packed as specified in 5.2, shall be palletized in a 4-way entry pallet in accordance with load type Ia of MIL-STD-147. Each prepared load shall be bonded with primary and secondary straps in accordance with bonding means K and L or film bonding means O or P. Pallet patterns for coats and uniforms, classes 1 and 2 shall be #6 and class 3 shall be #3. Interlocking of loads shall be effected by reversing the pattern of each course.

NOTES

6.1 Intended use. The coats are intended for wear as part of the service uniform by the male military personnel of the Department of the Army.

6.2 Ordering data. Acquisition documents should specify the following:

a. Title, number, and date of this document.
b. Type, class, and size required (see 1.2).
c. Whether coat and trousers are procured as a uniform (see 1.3 and 3.2.10.4).
d. Selection of applicable levels of preservation and packing (see 5.1 and 5.2).
e. When weather-resistant grade fiberboard shipping containers are required for level B packing (see 5.2.2.5).
f. When palletization is required (see 5.4).

6.3 Samples. For access to samples, address the contracting activity issuing the invitation for bids.

Downloaded from http://www.everyspec.com

6.4 Nylon thread. The particular nylon thread chosen should perform satisfactorily in each of the operations for which it is allowed under mass production conditions. Thread guide and tension devices should be carefully examined, and rough or worn machine components should be replaced. High needle temperature should be avoided to prevent melting of the thread.

6.5 Uniform assembly. When coats and trousers are procured as a uniform, the coats and trousers shall be assembled in the indicated corresponding sizes as follows:

Short		Regular		Long	
Coat size	Trouser size	Coat size	Trouser size	Coat size	Trouser size
33	27	33	27	34	28
34	28	34	28	35	29
35	29	35	29	36	30
36	30	36	30	37	31
37	31	37	31	38	32
38	32	38	32	39	33
39	33	39	33	40	34
40	34	40	34	41	35
41	35	41	35	42	36
42	36	42	36	43	37
43	38	43	38	43	38
44	39	44	39	44	39
		46	41	46	41
		48	43	48	43

6.6 Recycled material. It is encouraged that recycled material be used when practical as long as it meets the requirements of the document (see 3.2).

Custodian:

Army - GL

Review activities:

Army - MD
DLA - CT

Preparing activity:

Army - GL

Project No. 8405-A976

Downloaded from http://www.everyspec.com

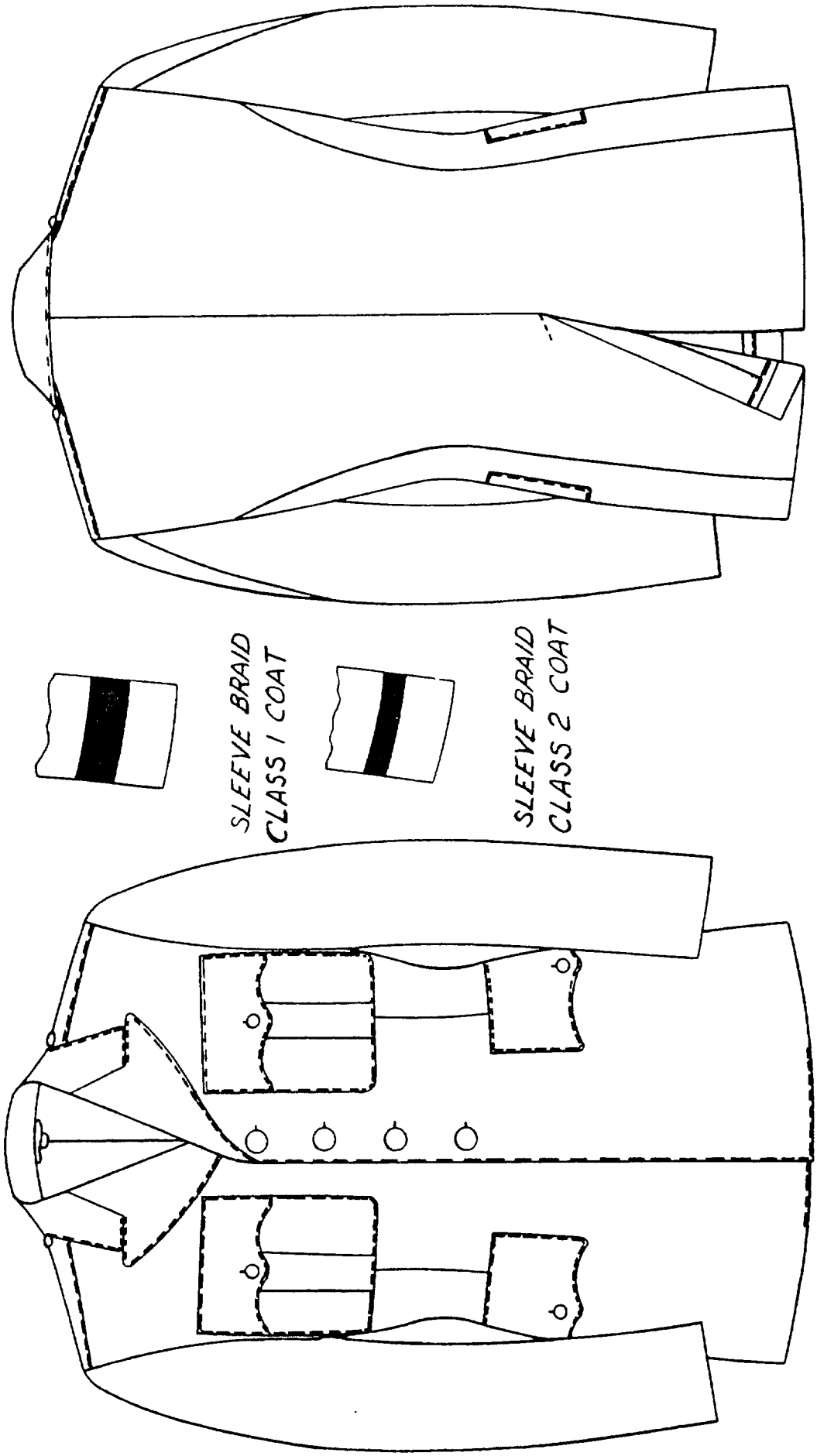

FIGURE 1 - COATS, MEN'S, ARMY GREEN 344

2-1-800

Downloaded from http://www.everyspec.com

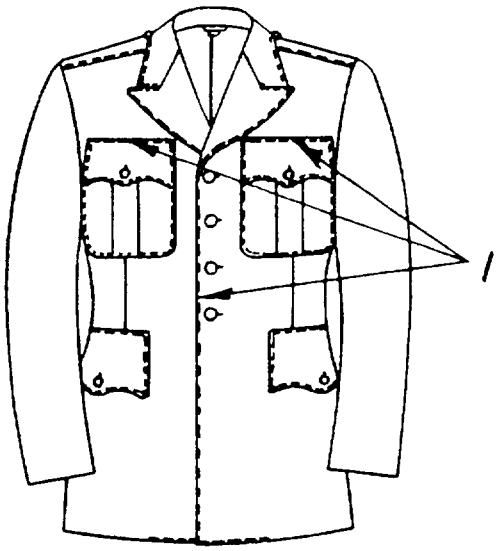

VIEW A

(1) TOP EDGE OF BREAST POCKET FLAPS SHALL BE AT A RIGHT ANGLE WITH THE FRONT EDGE OF COAT WHEN BUTTONED.

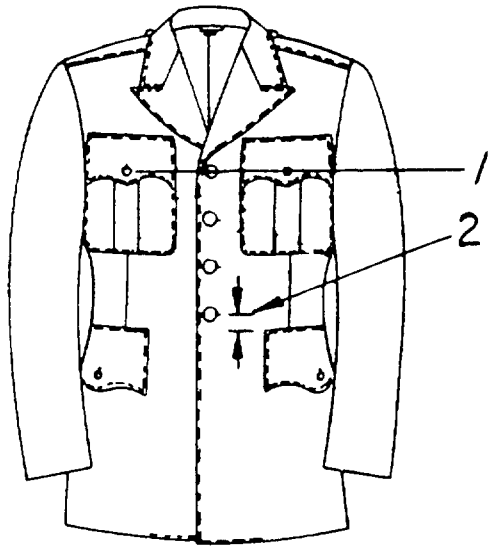

VIEW B

(1) BREAST POCKET FLAP BUTTONS & TOP FRONT BUTTON SHALL BE IN HORIZONTAL ALIGNMENT THRU CENTER OF BUTTONS.
(2) BOTTOM BUTTONHOLE OF FRONT SHALL BE POSITIONED 3/4 TO 1 INCH ABOVE TOP EDGE OF LOWER POCKET FLAPS.

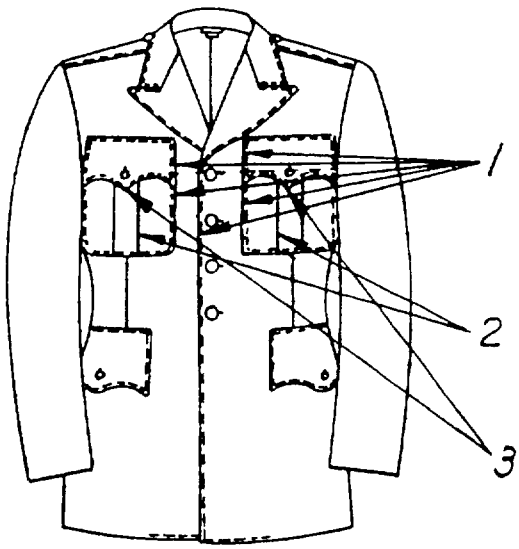

VIEW C

(1) FRONT EDGE OF FLAPS AND PATCH POCKETS SHALL BE PARALLEL TO FRONT EDGE OF COAT WHEN BUTTONED.
(2) PATCH POCKET SHALL BE PARALLEL TO FRONT EDGE OF COAT WHEN BUTTONED.
(3) POINT OF BREAST POCKET FLAPS SHALL BE CENTERED ON PATCH POCKET PLEAT

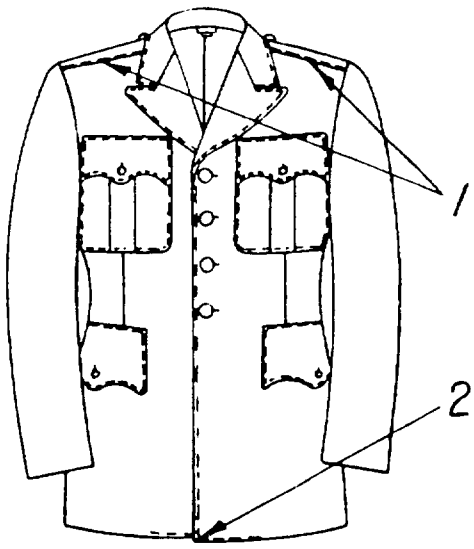

VIEW D

(1) SHOULDER LOOPS SHALL BE FLAT AND SMOOTH WITHOUT DISTORTION.
(2) LEFT FRONT BOTTOM EDGE SHALL BE EVEN WITH RIGHT, AND ROLL INWARD.

FIGURE 2 - COATS, MEN'S, ARMY GREEN 344

Downloaded from http://www.everyspec.com

THE
ARMY
UNIFORM

FOR SOLDIERS
OF DISTINCTION

FRONT OF FOLDER

PRESSING HINTS

SELECT A RELIABLE CLEANER.

HAVE HIM REMOVE ALL GLOSS AND IMPRESSIONS AFTER THE GARMENT HAS BEEN PRESSED.

BE CERTAIN OF THE FOLLOWING:

ROLL PRESS SLEEVES AND LAPELS

BACK OF FOLDER

APPEARANCE, MATERIAL AND CONSTRUCTION

YOUR APPEARANCE IS IMPORTANT NOT ONLY TO YOU BUT TO YOUR FAMILY AND ALL THE PEOPLE OF THE UNITED STATES AS WELL. WEAR THIS UNIFORM WITH DISTINCTION.
THE CONSTRUCTION AND DESIGN COMPARE FAVORABLY WITH THE FINEST TAILORING METHODS EMPLOYED BY BEST COMMERCIAL FIRMS.
YOU WILL ALWAYS PRESENT A SMART MILITARY APPEARANCE IF YOUR UNIFORM IS NEAT.

BRUSH IT!
KEEP IT CLEAN!
KEEP IT PRESSED!

INSIDE OF FOLDER

FIGURE 3 - CARDBOARD INSTRUCTION FOLDER

2-1-126

Downloaded from http://www.everyspec.com

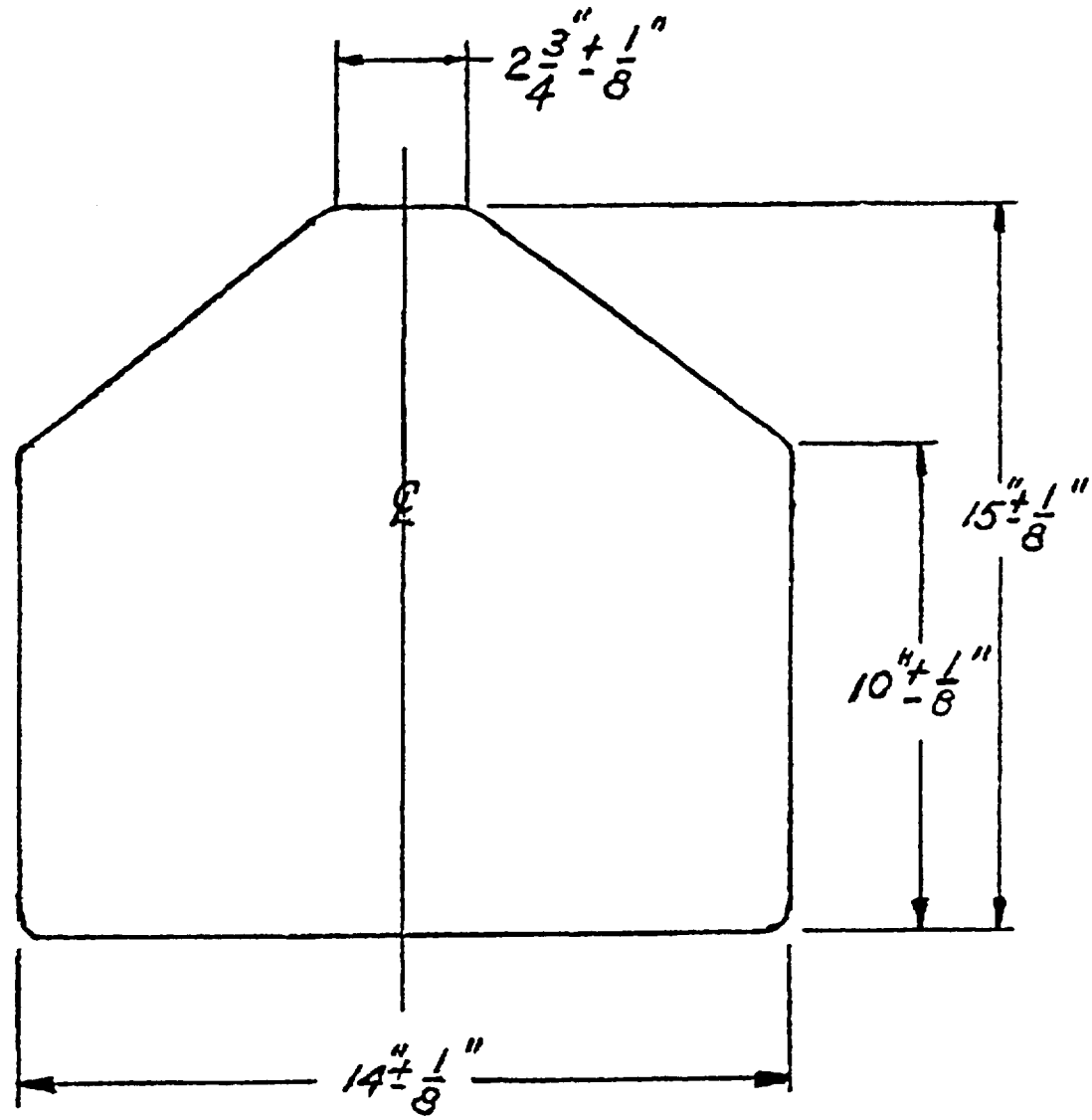

PAPERBOARD .032" THICK

FIGURE 4 - INSERT, PAPERBOARD

Downloaded from http://www.everyspec.com

Stitch class 800 - This class of stitch shall be formed with one or more needle threads and has for a general characteristic that the thread does not interloop with itself or any other thread or threads. The thread is passed completely through the material by means of a double pointed center eye needle and returned by another path. This class of stitch simulates hand stitching.

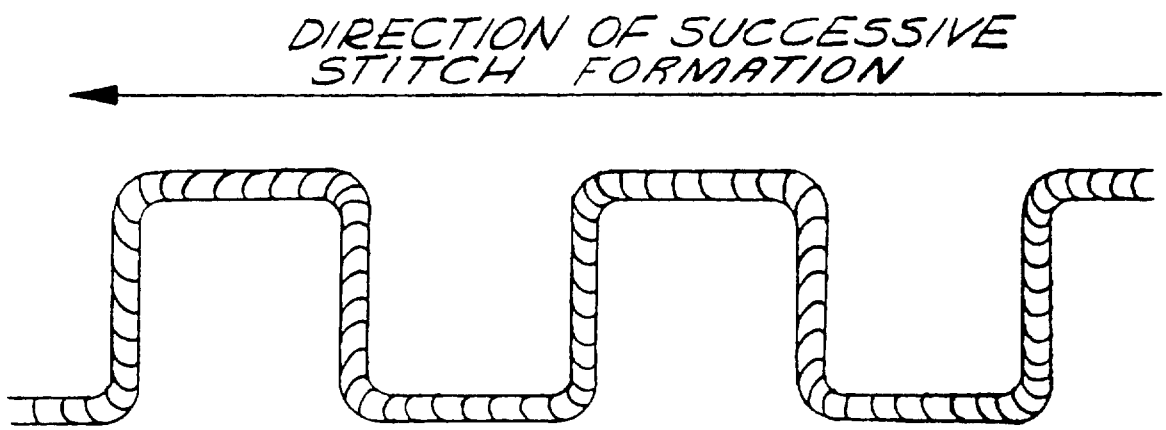

This type of stitch shall be formed with one needle thread which is passed completely through the material and returned by another path after the material has been moved forward one stitch length.

FIGURE-5-STITCH TYPE 801

Downloaded from http://www.everyspec.com

Downloaded from http://www.everyspec.com

INSTRUCTIONS: In a continuing effort to make our standardization documents better, the DoD provides this form for use in submitting comments and suggestions for improvements. All users of military standardization documents are invited to provide suggestions. This form may be detached, folded along the lines indicated, taped along the loose edge *(DO NOT STAPLE)*, and mailed. In block 5, be as specific as possible about particular problem areas such as wording which required interpretation, was too rigid, restrictive, loose, ambiguous, or was incompatible, and give proposed wording changes which would alleviate the problems. Enter in block 6 any remarks not related to a specific paragraph of the document. If block 7 is filled out, an acknowledgement will be mailed to you within 30 days to let you know that your comments were received and are being considered.

NOTE: This form may not be used to request copies of documents, nor to request waivers, deviations, or clarification of specification requirements on current contracts. Comments submitted on this form do not constitute or imply authorization to waive any portion of the referenced document*(s)* or to amend contractual requirements.

(Fold along this line)

(Fold along this line)

DEPARTMENT OF THE ARMY
Army Natick Research and Development Center
Natick, Massachusetts 01760

NO POSTAGE NECESSARY IF MAILED IN THE UNITED STATES

OFFICIAL BUSINESS
PENALTY FOR PRIVATE USE $300
STRNC-ES

BUSINESS REPLY MAIL
FIRST CLASS PERMIT NO. 12062 WASHINGTON D. C.
POSTAGE WILL BE PAID BY THE DEPARTMENT OF THE ARMY

Commander
US Army Natick Research and Development Center
ATTN: STRNC-ES
Natick, MA 01760

Downloaded from http://www.everyspec.com

STANDARDIZATION DOCUMENT IMPROVEMENT PROPOSAL

(See Instructions – Reverse Side)

1. DOCUMENT NUMBER	2. DOCUMENT TITLE
MIL-C-43368E(GL)	Coats Men's, Tropical and Serge, Polyester/Wool, Army Green I

3a. NAME OF SUBMITTING ORGANIZATION	4. TYPE OF ORGANIZATION *(Mark one)*
	☐ VENDOR
b. ADDRESS *(Street, City, State, ZIP Code)*	☐ USER
	☐ MANUFACTURER
	☐ OTHER *(Specify)*: _____

5. PROBLEM AREAS

a. Paragraph Number and Wording:

b. Recommended Wording:

c. Reason/Rationale for Recommendation:

6. REMARKS

7a. NAME OF SUBMITTER *(Last, First, MI)* – Optional	b. WORK TELEPHONE NUMBER *(Include Area Code)* – Optional
c. MAILING ADDRESS *(Street, City, State, ZIP Code)* – Optional	8. DATE OF SUBMISSION *(YYMMDD)*

DD FORM 1426 PREVIOUS EDITION IS OBSOLETE