Downloaded from http://www.everyspec.com

MIL-C-3098G
12 October 1979
SUPERSEDING
MIL-C-3098F
28 November 1972

MILITARY SPECIFICATION

CRYSTAL UNITS, QUARTZ,

GENERAL SPECIFICATION FOR

This specification is approved for use by all Departments and Agencies of the Department of Defense.

1. SCOPE

1.1 Scope. This specification covers the general requirements for quartz crystal units, (see 6.5.1), designed for frequency control of Armed Services electronic equipment (see 6.1).

1.2 Classification.

1.2.1 Type designation. The type designation applies only to crystal units meeting all requirements of the specification. The type designation shall be in the following form, and as specified (see 3.1, 3.21, and 6.2):

CR	-15	/U
Component (1.2.1.1)	Number (1.2.1.2)	Basic indicator (1.2.1.3)

1.2.1.1 Component. Crystal units are identified by the two-letter symbol "CR."

1.2.1.2 Number. The number identifies a type of crystal unit which has been designed with certain electrical and physical characteristics, covered by a single specification sheet. The number comprises one or more digits, or one or more digits followed by a letter, and is preceded by a hyphen; the letter indicates a modification of the basic type, e.g., 15B.

1.2.1.3 Basic indicator. The basic application for which a crystal unit has been designed is indicated by the symbol "/U" denoting "general utility."

2. APPLICABLE DOCUMENTS

2.1 Issues of documents. The following documents of the issue in effect on date of invitation for bids or request for proposal, form a part of this specification to the extent specified herein:

Beneficial comments (recommendations, additions, deletions) and any pertinent data which may be of use in improving this document should be addressed to: Commander Electronics Research and Development Command ATTN: DRDEL-ED Adelphi, MD 20783 by using the self-addressed Standardization Document Improvement Proposal (DD Form 1426) appearing at the end of this document or by letter.

Downloaded from http://www.everyspec.com

SPECIFICATIONS

FEDERAL

QQ-S-571 - Solder: Tin Alloy, Lead-Tin Alloy; and Lead Alloy.
QQ-S-781 - Strapping, Steel, Flat and Seals.
PPP-B-566 - Boxes, Folding, Paperboard.
PPP-B-585 - Boxes, Wood, Wirebound.
PPP-B-601 - Boxes, Wood, Cleated-Plywood.
PPP-B-621 - Boxes, Wood, Nailed and Lock-corner.
PPP-B-636 - Boxes, Shipping, Fiberboard.
PPP-B-676 - Boxes, Setup.
PPP-T-60 - Tape: Packaging, Waterproof.
PPP-T-76 - Tape, Packaging, Paper, (For Carton Sealing).

MILITARY

MIL-P-116 - Preservation Packaging, Methods of.
MIL-H-10056 - Holders, Crystal, General Specification for.
MIL-C-45662 - Calibration System Requirements.

(See supplement 1 for list of applicable specification sheets.)

STANDARDS

MILITARY

MIL-STD-105 - Sampling Procedures and Tables for Inspection by Attributes.
MIL-STD-129 - Marking for Shipment and Storage.
MIL-STD-147 - Palletized Unit Loads on 40" x 48" Pallets.
MIL-STD-202 - Test Methods for Electronic and Electrical Component Parts.
MIL-STD-1188 - Commercial Packaging of Supplies and Equipment.
MIL-STD-1285 - Marking of Electrical and Electronic Parts.

PUBLICATIONS

U.S. ARMY

TM 11-2652 - Crystal Impedance Meter TS-683/TSM.
TM 11-5051 - Crystal Impedance Meter TS-330/TSM.
TM 11-5106 - Quartz Crystal Unit Test Set TS-710/TSM.

(Copies of specifications, standards, drawings, and publications required by contractors in connection with specific procurement functions should be obtained from the procuring activity or as directed by the contracting officer.)

3. REQUIREMENTS

3.1 Specification sheets. The individual item requirements shall be as specified herein and in accordance with the applicable specification sheets. In the event of any conflict between this specification and the specification sheet, the latter shall govern.

3.2 First article inspection. When specified (see 6.3) crystal units not covered by specification sheets shall be inspected under first article (see 4.6). These crystal units shall be capable of meeting the qualification tests of table II.

3.3 Qualification. Crystal units furnished under this specification and covered by specification sheets shall be products which are qualified for listing on the applicable qualified products list at the time for opening bids. (see 4.7 and 6.4). For crystal units not listed on the qualified products list, the qualification requirements shall be waived. (see 3.2).

(see 3.1). The external dimensions shall be as specified after assembling and marking.

Downloaded from http://www.everyspec.com

3.4 Materials. Materials shall be used which will enable the crystal units to meet the requirements of this specification. When required by the contract (see 6.2), the manufacturer shall furnish a certification supported by verifiable data that materials used in fabricating the crystal units are in accordance with the specified requirements, and are the same materials used in fabricating the qualification samples.

3.4.1 Holder-base and cover. The crystal holder (see 6.5.2) shall be of the type specified (see 3.1) and of the physical dimensions and materials specified in MIL-H-10056. An alternate design, employing different processes such as cold weld or resistance weld may be used.

3.4.2 Soldering and soldering flux. The solder used in joining the cover of a metal crystal holder to the base shall be of a composition Sn40, or a composition of a higher tin content, conforming to QQ-S-571. Flux residue shall be completely removed from all surfaces.

3.5 Etching (for other than polished crystal resonators). The manufacturer shall maintain objective data that the crystal resonators have been subjected to etching and meet the frequency change requirements (see 4.4).

3.5.1 800 kHz and above. After completing the loose abrasive (lapping, polishing) process, crystal-resonators shall be etched in accordance with the following formula and when tested in accordance with 4.4 shall meet the minimum frequency change requirements. The manufacturer shall furnish a certification, supported by objective data, that the crystal-resonators have been subjected to etching and meet the frequency change requirements as follows:

$$\Delta f \geq .05 \times f^2 \times \mu \text{ or } \Delta f \geq \frac{.05 \times f^2 \times 15000}{M}$$

where Δf = frequency increase in kilohertz (kHz)

.05 - constant

f = fundamental frequency of the resonator in megahertz (MHz)

μ = average abrasive size in microns

M = average abrasive mesh size

3.5.2 Below 800 kHz. An "AT" cut crystal blank in the 5 to 10 MHz range shall be subjected to the test in 3.5.1. This reference "AT" cut crystal blank shall have been final lapped with the same mesh size compound as the "other cut" crystal blanks which are to be etched. The time required for etching the "AT" cut reference crystal blank shall be noted. The "other cut" crystal blanks shall then be etched for a period of time equal to or greater than that noted for the "AT" cut reference crystal blank.

Equivalent mesh size	Microns
* 1,000	15.0
2,000	7.5
3,000	5.0
4,000 or finer	3.75

* There shall be no ground surface on any portion of the resonator. Coarse abrasives (greater than 15.0 microns) shall not be used in the final lapping process. The resonator shall not be lapped after etching. (However, edges of resonators below 800 kHz may be abraded for final frequency adjustment.)

3.6 Design and construction. Crystal units shall be of the design and construction specified (see 3.1). The external dimensions shall be as specified after assembling and marking.

3.6.1 Supporting structure. For crystal units with metal-plated quartz resonators, except as provided in 3.6.2, there shall be intimate metal-to-metal continuity from the external leads to the resonator. Interference, friction, crimped, or similar joining of parts unreinforced by solder, welding, etc., shall not be used.

Downloaded from http://www.everyspec.com

3.6.2 Bonding. For crystal units with metal-plated quartz resonators, the supporting wires or other supporting structures shall be bonded to the quartz resonator by an electrically conductive cement, solder, thermal compression, or by electroplated nickel bond. Other materials or processes may be used if prior approval is obtained from the qualifying activity.

3.6.3 Filling and Sealing. Crystal units shall be evacuated, filled with a mixture of 90 percent dry nitrogen and 10 percent dry helium, and sealed. This evacuation, filling, and seal process shall be completed in a chamber. The chamber shall be evacuated to an absolute pressure of not greater than 1 torr prior to filling and sealing. The dew point of the gas shall be -55°C or lower. Glass holders shall be evacuated to pressure of less than 0.1 torr.

3.6.4 Glass parts. Glass seals in the base of crystal units with metal holders shall be free of cracks. Crystal units with glass holders shall contain no cracks in the glass structure (see 4.9.2.1.1). Minute flaking around the feather edge of a meniscus, which is generally inevitable, shall not be considered a crack.

3.6.5 Pin alinement. The pins in the base of the crystal unit shall freely and completely enter the pin-alinement test gage, or if a physical gage is not used, the dimensions and spacing of the pins shall conform to the limiting dimensions of the pin-alinement test gage as viewed on a shadow-graph (see 4.9.2.1.2). The pin undercut may be omitted.

3.6.6 Final frequency adjustment. Final frequency adjustment shall not be accomplished by means of abrasion of the electrode, exposure of the crystal resonator to a halogen vapor, or by mechanical application of any type of loading material.

3.6.7 Wire-lead terminals. The length of wire-lead terminals shall be 0.500 inch minimum.

3.7 Solderability. Wire-lead terminals shall be solderable when tested as specified in 4.9.3. The criteria for evaluation of solderability shall be as specified in method 208 of MIL-STD-202.

3.8 Shock (specified pulse). When crystal units are tested as specified in 4.9.4, changes in frequency and equivalent resistance shall not exceed specified values (see 3.1). Measurements of frequency and resistance shall be made immediately before and immediately after the test (see 4.9.1.2), except that for group A inspection, these measurements of frequency and resistance shall not be required.

3.9 Vibration. When tested as specified in 4.9.5, changes in frequency and equivalent resistance of the crystal unit shall not exceed specified values (see 3.1). Measurements of frequency and resistance shall be made immediately before and immediately after the test (see 4.9.1.2).

3.10 Reduced drive level (overtone units, and when specified, fundamental units). When tested as specified in 4.9.6, the resistance shall not exceed the maximum specified (see 3.1).

3.11 Capacitance, shunt (when specified, see 3.1). When tested as specified in 4.9.7, the shunt capacitance shall be as specified (see 3.1).

3.12 Frequency and equivalent resistance. The frequency and equivalent resistance of the crystal unit shall be within the limits specified when tested under the following conditions as applicable (see 3.1 and 4.9.8).

3.12.1 Frequency stability (controlled). Throughout the operating temperature range (see 6.5.6), the frequency of crystal units designed for operation under controlled temperature conditions shall not deviate from the measured frequency at the reference temperature by more than the value specified (see 3.1), and shall also be within the specified frequency tolerance limits, when crystal units are tested as specified in 4.9.8.2.

3.12.2 Operable temperature range (controlled). Crystal units designed for operation under controlled temperature conditions shall be required to oscillate over the operable temperature range (see 6.5.7) of the unit, but not necessarily within the specified frequency and resistance limits, when tested in accordance with 4.9.8.3.

Downloaded from http://www.everyspec.com

3.12.3 Low temperature storage. When crystal units are tested as specified in 4.9.8.4, the resistance shall not exceed the maximum specified when the unit is operated at the rated drive level (see 3.1), except when performed in conjunction with reduced drive level (see 4.9.6).

3.13 Unwanted modes.

3.13.1 Method I (excluding overtone units). When tested as specified in 4.9.9.1, unless otherwise specified (see 3.1), there shall be no unwanted modes of oscillation. In addition, there shall be no abrupt frequency shifts and no intermittent oscillations. (Some crystal units may not start oscillating immediately at the plus 20 percent setting, or may cease oscillating during detuning, without resumption of oscillation on further detuning). These conditions are permitted.

3.13.2 Method II (overtone units, or fundamental mode units (when specified)). When tested as specified in 4.9.9.2, all unwanted modes shall have a resistance that exceeds 2 times the main mode resistance but is not less than the specified main mode resistance value (see 3.1).

3.14 Thermal shock.

3.14.1 Method I (crystal units with metal holders). When tested as specified in 4.9.10.1, changes in frequency and equivalent resistance of the crystal unit shall not exceed specified values (see 3.1). Measurements of frequency and resistance shall be made immediately before and immediately after the test (see 4.9.1.2).

3.14.2 Method II (applicable to crystal units with glass holders). When tested as specified in 4.9.10.2, there shall be no evidence of cracking, chipping or breaking in any part of the crystal unit, when examined as specified in 4.9.2.1.1.

3.15 Seal.

3.15.1 Crystal units in metal holders. When tested as specified in 4.9.11.1, the leakage rate of crystal units shall not exceed 10^{-8} atmospheric cubic centimeters per second (atm cc/sec).

3.15.2 Crystal units in glass holders. When tested as specified in 4.9.11.2, satisfactory seal of glass-enclosed crystal units shall be evidenced by the presence of a characteristic blue glow inside the glass envelope. A reddish glow or the absence of any glow shall be considered evidence of an inadequate seal.

3.16 Salt spray (corrosion). When tested as specified in 4.9.12, there shall be no evidence of excessive corrosion. Corrosion that causes impairment of the electrical or mechanical performance of the unit shall be considered excessive.

3.17 Moisture resistance. When tested as specified in 4.9.13, the frequency and equivalent resistance of the crystal units shall be within the limits specified in 3.12, and the insulation resistance shall be not less than 500 megohms.

3.18 Aging. When tested as specified in 4.9.14, the difference between the highest and lowest frequencies measured shall not exceed the value specified (see 3.1).

3.18.1 Accelerated aging (above 800 kHz crystal units). When tested as specified in 4.9.14.1, the difference in frequency between the measurements made immediately prior to and immediately after conditioning, shall not exceed 5 parts per million (ppm) or the value specified (see 3.1) and shall not exceed the maximum resistance specified (see 3.1).

3.19 Terminal strength.

3.19.1 Terminal pull. When tested as specified in 4.9.15.1, there shall be no evidence of damage to the terminal or glass seal, or movement of the terminal relative to the glass at the point of seal.

3.19.2 Terminal bend (applicable to crystal units with undercut pins). When tested as specified in 4.9.15.2, terminals shall not break and glass seals shall not crack or chip.

3.19.3 Wire-lead bend (applicable to crystal units with wire-lead terminals). When tested as specified in 4.9.15.3, there shall be no severing of the terminal, or cracking or chipping of the glass.

Downloaded from http://www.everyspec.com

3.20 Bond strength (when specified, see 3.1). When tested as specified in 4.9.16, the junction between each supporting wire or other supports and the surface of the resonator shall have a minimum bond strength as specified (see 3.1).

3.21 Marking. The type designation, including specified frequency, and manufacturer's code designation shall be marked on the crystal unit in accordance with MIL-STD-1285, at the locations specified (see 3.1). The type designation specified in 1.2.1 shall not be marked on any crystal unit for which the contractual requirements deviate in any way from the requirements specified herein for a crystal type (see 6.2). Any omitted, relaxed, added, or more stringent contractual requirement shall be considered a deviation. Crystal units shall also be marked with the year and week of the final test in accordance with MIL-STD-1285; however, the manufacturer's code shall be by letters (see 6.9). Unless otherwise specified (see 6.2), no other marking shall be permitted on the crystal unit. The frequency specified shall be rounded to the final hertz and shall consist of 7 digits or less for frequencies below 10 megahertz (MHz), 8 digits for the range 10 MHz up to 100 MHz, and 9 digits for frequencies 100 MHz and above. Kilohertz (kHz) shall be used with frequencies below 1 MHz and megahertz (MHz) with frequencies from 1 MHz and above. The frequency marking shall occupy a maximum of 13 spaces, as follows: A maximum of 9 digits; a space for a decimal point; and 3 spaces for "kHz" or "MHz", whichever is applicable; typical crystal markings are 833.333 kHz, 45.555556 MHz, and 123.888889 MHz. The type designation, frequency, manufacturer's code designation characters shall be not less than 1/16 inch in height (3/64 inch on HC-35/U, HC-44/U, and HC-45/U) unless otherwise specified, arranged as illustrated on the specification sheet (see 3.1), and located symmetrically with respect to the center axis of the crystal holder.

3.22 Crystal sets. Crystal sets, consisting of two or more quartz crystal units, one of each specified frequency, shall be furnished in compartmentalized trays, as required (see 6.2h). Storage boxes shall be hinged-cover and clasp-style. The material shall be plastic, wood, or metal. The finish of wood or metal boxes shall be enamel or lacquer. Boxes shall be provided with plastic, metal, or felt trays having individual cells for each crystal unit and shall be acceptable to the Government, as specified (see 6.2).

3.23 Workmanship. Crystal units shall be processed in such a manner as to be of uniform quality and free from any defects that would adversely affect life, serviceability, or appearance. The interior of the crystal unit shall contain no flux, quartz or grinding particles, residue or other foreign or unapproved materials. There shall be no evidence of fractures in the resonator cracked or flaked edges. Electrode material shall be clean and untarnished. There shall be no evidence of final frequency adjustment by means of abrasion of the electrode, exposure of the crystal element to a halogen vapor, or mechanically applied loading materials.

4. QUALITY ASSURANCE PROVISIONS

4.1 Responsibility for inspection. Unless otherwise specified in the contract, the contractor is responsible for the performance of all inspection requirements as specified herein. Except as otherwise specified, the contractor may utilize his own or any other facility suitable for the performance acceptable to the Government. The Government reserves the right to perform any of the inspections set forth in the specification where such inspections are deemed necessary to assure supplies and services conform to prescribed requirements.

4.1.1 Test equipment and inspection facilities. Test and measuring equipment and inspection facilities of sufficient accuracy, quality and quantity to permit performance of the required inspection shall be established and maintained by the contractor. The establishment and maintenance of a calibration system to control the accuracy of the measuring and test equipment shall be in accordance with MIL-C-45662.

4.1.1.1 Contractor's equivalent test set. The contractor's equivalent test set shall be furnished by the contractor, and shall be used for the performance of quality conformance inspection. The characteristics of this set shall duplicate those of the applicable Government reference standard test set (see 4.1.2.1) and shall be correlated prior to performing quality conformance inspection. In addition, the contractor's equivalent test set shall be designed to permit external connections to the crystal unit since it is not intended that the test set be subjected to the ambient temperature range specified for the crystal unit.

4.1.1.1.1 Frequency correlation. The frequency of a given crystal unit when oscillating in the contractor's equivalent test set (see 4.1.1.1), shall be within 0.0005 percent of its frequency (see 3.1) when oscillating in the Government reference standard test set (see 4.1.2.1).

Downloaded from http://www.everyspec.com

4.1.1.1.2 Resistance correlation. The equivalent resistance of a given crystal unit, as measured in the contractor's equivalent test set (see 4.1.1.1), shall be within 10 percent of its resistance as measured in the Government reference standard test set (see 4.1.2.1).

4.1.2 Test sets.

4.1.2.1 Government reference standard test sets. The Government reference standard test set shall be the specified crystal impedance meter (see 3.1), and shall be furnished by the Government at the contractor's plant (see 6.8). The Government reference standard test set shall be used to check the characteristics and accuracy of the contractor's equivalent test set and shall not be used to perform quality conformance inspection or qualification inspection. It shall be the contractor's responsibility to have the Government reference standard test set recertified. Recertification shall be accomplished by the Electronics Research and Development Command (see 6.8).

4.1.2.1.1 Procedure for adjustment and operation. The drive-level adjustment and operation of crystal impedance meters shall be in accordance with the applicable technical manual or other instructions (see 6.6), as follows:

Crystal impedance meter	Technical manual
TS-330/TSM	TM 11-5051
TS-683/TSM and TS-683A/TSM	TM 11-2652
TS-710/TSM	TM 11-5106
AN/TSM-15	Applicable instruction book
AN/TSM-17	Applicable instruction book

Adjustment of CI meter frequency tuning control shall be in accordance with 12.4 of TM 11-5151 for TS-330/TSM and 18.3 of TM 11-2652 for TS-683A/TSM. The AN/TSM-15 test set shall be used in lieu of the TS-683/TSM test set for all frequencies above 50 MHz.

4.2 Classification of inspections. The inspection requirements specified herein are classified as follows:

a. Materials inspection (see 4.3).
b. First article inspection (see 4.6).
c. Qualification inspection (see 4.7).
d. Quality conformance inspection (see 4.8).

4.3 Materials inspection. Materials inspection shall consist of certification supported by verifying data that the materials listed in table I, used in fabricating the crystal units, are in accordance with the applicable referenced specifications or requirements prior to such fabrication.

TABLE I. Materials inspection.

Materials	Requirement paragraph	Applicable specification
Solder and soldering flux	3.3.1	QQ-S-571
Holder-base and cover	3.4.1	MIL-H-10056

Downloaded from http://www.everyspec.com

4.4 Etching evaluation. Because the etching solution changes in effectiveness by dilution, depletion, and evaporation, its performance must be under continual evaluation. The etching shall be performed by one of the following methods:

4.4.1 Method 1. At the beginning of each production shift (after the etching solution has reached equilibrium conditions), one flat (noncontoured) resonator having the characteristic surface finish produced by the abrasive compound used in final lapping shall be selected and subjected to the standard etching procedure. This evaluation shall be repeated 4 hours later. If this sample fails to meet the minimum specified frequency change (see 3.5.1) two additional sample units shall be tested. If either sample unit fails, the etching process shall be considered out of control and shall be adjusted to bring it under control. In that event, the entire batch or load must be returned to the etching bath until compliance with 3.5.1 is achieved.

4.4.2 Method 2. The etching process shall be evaluated by measuring the frequency of each crystal blank before etching and after etching. The change in frequency shall meet the requirements of 3.5. The control point on a production traveler (see 6.5.10) shall contain quantity into etching and quantity out of etching for each batch, as well as the frequencies and tolerances involved. This may be considered objective data for certification.

4.5 Inspection conditions. Unless otherwise specified herein, all inspections shall be performed in accordance with the test conditions specified in the "GENERAL REQUIREMENTS" of MIL-STD-202.

4.6 First article inspection. First article inspection shall be performed by the contractor on crystal units not covered by the specification sheets after award of contract and prior to production, at a location acceptable to the Government, (see 3.2 and 6.3). First article inspection shall be performed on a sample unit which has been produced with equipment and procedures normally used in production. First article approval is valid only on the contract under which it is granted, unless extended by the Government to other contacts.

4.6.1 Sample size. Thirty sample units shall be subjected to qualification inspection as specified in table II and appendix I.

4.6.2 Inspection routine. Sample units, grouped as specified in appendix I, shall be subjected to the qualification inspection specified in table II in the order shown.

4.6.3 Failures. Failures in excess of those allowed in table II shall be cause for refusal to grant qualification approval.

4.7 Qualification inspection. Qualification inspection shall be performed at a laboratory acceptable to the Government (see 3.3 and 6.4) on sample units produced with equipment and procedures normally used in production.

4.7.1 Sample size. Thirty sample units shall be subjected to qualification inspection as specified in table II and appendix I.

4.7.2 Inspection routine. Sample units, grouped as specified in appendix I, shall be subjected to the qualification inspection specified in table II in the order shown.

4.7.3 Failures. Failures in excess of those allowed in table II shall be cause for refusal to grant qualification approval.

4.7.4 Retention of qualification. To retain qualification, the contractor shall forward a report at 12-month intervals to the qualifying activity. The qualifying activity shall establish the initial reporting date: The report shall consist of:

a. A summary of the results of the tests performed for inspection of product for delivery, group A, indicating as a minimum the number of lots that have passed and the number that have failed. The results of tests of all reworked lots shall be identified and accounted for.
b. The results of tests performed for periodic inspection, group B, including the number and mode of failures. The test report shall include results of all periodic inspection tests performed and completed during the 12-month period. If the test results indicate nonconformance with specification requirements, and corrective action acceptable to the qualifying activity has not been taken, action may be taken to remove the failing product from the qualified products list.

Downloaded from http://www.everyspec.com

Failure to submit the report within 30 days after the end of each 12-month period may result in loss of qualification for the product. In addition to the periodic submission of inspection data, the contractor shall immediately notify the qualifying activity at any time during the 12-month period that the inspection data indicates failure of the qualified product to meet the requirements of this specification.

In the event that no production occurred during the reporting period, a report shall be submitted certifying that the company still has the capabilities and facilities necessary to produce the item. If during three consecutive reporting periods there has been no production, the manufacturer may be required, at the discretion of the qualifying activity, to submit crystal units of the same type and range of frequencies, or in the same group of appendix I to testing in accordance with the qualification inspection requirements.

TABLE II. Qualification and first article inspection.

Inspection	Requirement paragraph	Method paragraph	Number of failures permitted 1/ (see 4.7.3)
(30 sample units)			
Visual and mechanical inspection (external)	3.1, 3.4, 3.21 and 3.23	4.9.2.1	
Glass parts			
Pin alinement			
Solderability	3.7	4.9.3	
Shock (specified pulse)	3.8	4.9.4	
Vibration	3.9	4.9.5	
Reduced drive level 2/	3.10	4.9.6	
Capacitance, shunt (when specified)	3.11	4.9.7	
Frequency and equivalent resistance	3.12	4.9.8	
Frequency stability (controlled)	3.12.1	4.9.8.2	
Operable temp range (controlled)	3.12.2	4.9.8.3	
Low temperature storage	3.12.3	4.9.8.4	
Unwanted modes	3.13	4.9.9	2
Thermal shock	3.14	4.9.10	
Seal	3.15	4.9.11	
Salt spray (corrosion)	3.16	4.9.12	
Moisture resistance	3.17	4.9.13	
Aging	3.18	4.9.14	
Terminal strength 3/	3.19	4.9.15	
Terminal pull	3.19.1	4.9.15.1	
Terminal bend (when applicable)	3.19.2	4.9.15.2	
Wire-lead bend (when applicable)	3.19.3	4.9.15.3	
Visual and mechanical inspection (internal) 4/	3.1, 3.5, 3.6, 3.6.6 and 3.23	4.9.2.2	
Bond strength (when specified)	3.20	4.9.16	

1/ Each failure shall be in a different test; two failures in any one test shall be cause for refusal to grant qualification. Failure of one sample unit in one or more examinations or tests shall be considered a single failure.
2/ Applicable to overtone units, and when specified, fundamental units.
3/ Two sample units only from those to be used for visual and mechanical inspection (internal).
4/ Six sample units, two each from the lower end, middle, and upper end frequency.

Downloaded from http://www.everyspec.com

4.8 Quality conformance inspection.

4.8.1 Inspection of product for delivery. Inspection of product for delivery shall consist of group A inspection.

4.8.1.1 Testing after storage. When a crystal unit is stored for 30 days or longer after group A inspection and before shipment, it shall be subjected to the frequency test (see 4.9.8) for controlled and noncontrolled crystal units. Those crystal units failing this test shall not be delivered on the contract. Failures in excess of 10 percent of the lot shall be cause for rejection of the lot.

4.8.1.2 Inspection lot. An inspection lot shall consist of all crystal units of similar types and one frequency or assorted frequencies within the range covered by that type (see appendix I) produced under essentially the same conditions, and offered for inspection at one time.

4.8.1.3 Group A inspection. Group A inspection shall consist of the inspections specified in table III. The tests in subgroup 1 shall be performed in the order shown and on the same set of sample units. The test in subgroup 2 may be performed on a separate set of sample units.

TABLE III. Group A inspection.

Inspection	Requirement paragraph	Method paragraph	AQL (percent defective) Major	AQL (percent defective) Minor
Subgroup 1				
Visual and mechanical inspection (external) 1/	3.1, 3.4, 3.21 and 3.23	4.9.2.1	1.0	4.0
Glass parts				
Pin alinement				
Shock (specified pulse)	3.8	4.9.4	1.0	--
Reduced drive level 2/	3.10	4.9.6		
Frequency and equivalent resistance	3.12	4.9.8		
Frequency stability (controlled)	3.12.1	4.9.8.3		
Operable temperature range (controlled)	3.12.2	4.9.8.3		
Low temperature storage	3.12.3	4.9.8.4		
Unwanted modes	3.13	4.9.9		
Seal	3.15	4.9.11		
Subgroup 2				
Accelerated aging	3.18	4.9.14	1.0	--

1/ Two sample units only for external dimensions.

2/ Applicable to overtone units, and when specified, fundamental units.

4.8.1.3.1 Sampling plan. Statistical sampling and inspection shall be in accordance with MIL-STD-105 for general inspection level II, except the sample shall be representative of the inspection lot, with respect to crystal unit types and frequency distribution, containing as far as practicable, proportions equivalent to those of the inspection lot. When the lot, as defined in 4.8.1.2, consists of less than 90 units, two or more such lots may be combined into grand lots whose size does not exceed 90 units. The grand lot may contain inspection lots from different groups. The sample selected from those grand lots shall be, to the greatest extent possible, representative of the lead crystal types in all component lots commensurate with random sampling techniques. There shall be a minimum of one type from each group and the choice of samples shall be proportional. The acceptable quality level (AQL) shall be as specified in table III. Major and minor defects shall be as defined in table V and MIL-STD-105.

Downloaded from http://www.everyspec.com

4.8.1.3.2 Rejected lots. If an inspection lot is rejected, the contractor may rework it to correct the defects, or screen out the defective units, and resubmit for reinspection. Resubmitted lots shall be inspected using tightened inspection. Such lots shall be separate from new lots, and shall be clearly identified as reinspected lots.

4.8.1.3.3 Disposition of sample units. Sample units which have passed all the group A inspection may be delivered on the contract if the lot is accepted and the sample units are still within specified electrical tolerances (see 4.8.1.1).

4.8.2 Periodic inspection. Periodic inspection shall consist of group B. Except where the results of these inspections show noncompliance with the applicable requirements (see 4.8.2.1.3), delivery of products which have passed group A shall not be delayed pending the results of these periodic inspections.

4.8.2.1 Group B inspection. Group B inspection shall consist of the inspection specified in table IV. Group B inspection shall be made on sample units which have passed group A inspection. Test of subgroup 1 shall be made on at least 13 units 12 months or less after notification of qualification and at least once after each subsequent 12-month period. Tests in subgroup 1 shall be made in the order shown. Subgroup 2 tests shall be made on at least 13 units 6 months or less after the date of notification of qualification, and at least once after each subsequent 6-month period.

TABLE IV. Group B inspection.

Inspection	Requirement paragraph	Method paragraph	AQL (percent defective) Major	AQL (percent defective) Minor
Subgroup 1				
Solderability	3.7	4.9.3	1.0	--
Capacitance, shunt (when specified)	3.11	4.9.7		
Vibration	3.9	4.9.5		
Thermal shock	3.14	4.9.10		
Seal	3.15	4.9.11		
Salt spray (corrosion)	3.16	4.9.12		
Moisture resistance	3.17	4.9.13		
Terminal strength	3.19	4.9.15		
Terminal pull	3.19.1	4.9.15.1		
Terminal bend (when applicable) 1/	3.19.2	4.9.15.2		
Wire-lead bend (when applicable)	3.19.3	4.9.15.3		
Visual and mechanical examination (internal) 1/	3.1, 3.4, 3.5 and 3.23	4.9.2.2		
Bond strength (when specified)	3.20	4.9.16		
Subgroup 2				
Aging	3.18	4.9.14	1.0	--

1/ Two sample units only from those to be used for visual and mechanical examination (internal).

4.8.2.1.1 Sampling plan. Statistical sampling and inspection shall be in accordance with MIL-STD-105. The special inspection level shall be S-3 subgroup 1 and S-4 subgroup 2. The lot or batch shall consist of all inspection lots in the same grouping as in table VII, that have passed group A inspection during the time period in 4.8.2.1. The AQL shall be as specified in table IV. If less than 35,000 units for subgroup 1 and 1,200 units for subgroup 2 in any one group of table VII are produced during the 6- or 12-month period, as applicable, only 13 units shall be subjected to each subgroup. The sample shall be representative of the lot with respect to crystal unit types and frequency distribution, containing as far as practicable, proportions equivalent to those of the lot.

Downloaded from http://www.everyspec.com

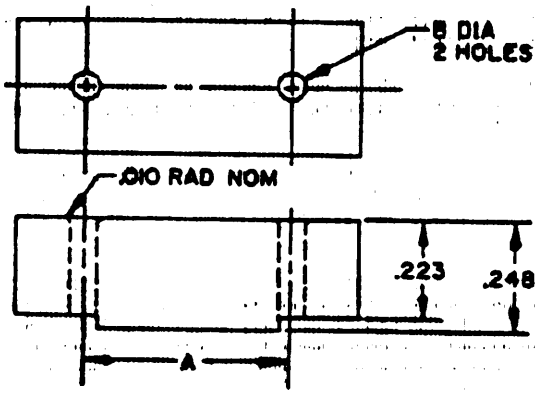

Nominal pin diameter	A	B
.040	.1920	[illegible]
.050	.4860	[illegible]

INCHES	MM	INCHES	MM
.010	.25	.1920	4.877
.040	1.02	.223	5.66
.0500	1.270	.248	6.30
.0600	1.524	.4860	12.34

NOTES:
1. Dimensions are in inches.
2. Metric equivalents are given for general information only and are based upon 1.00 inch = 25.4 mm.
3. Unless otherwise specified, tolerances are ±.003 (.08 mm) and ±.0005 (.013 mm).

FIGURE 1. Pin gages.

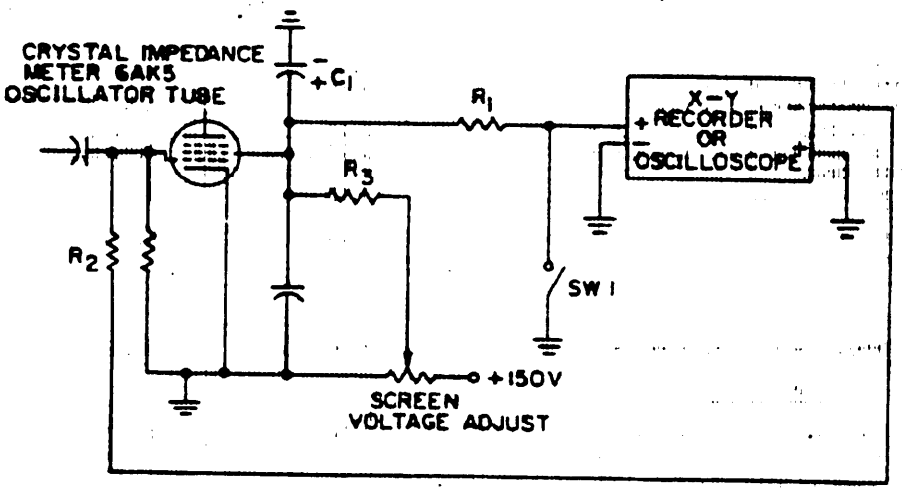

Components added to applicable CI meter
C_1 1000 µ F/35V
R_1 1K 1/4W
R_2 & R_3 15 K 1/4W
SW1 normally open

FIGURE 2. Modification of crystal test set (for reduced drive level test).

Downloaded from http://www.everyspec.com

4.8.2.1.2 Disposition of sample units. Sample units which have been subjected to subgroup 1 inspection may be delivered on the contract, prior to completion of subgroup 2 inspection. Sample units which have been subjected to subgroup 2 inspection shall not be delivered on the contract.

4.8.2.1.3 Noncompliance. If a sample fails to pass group B inspection, the contractor shall notify the qualifying activity and the cognizant inspection activity of such failure and take corrective action on the materials or processes, or both, as warranted, and on all units of product which can be corrected and which were manufactured under essentially the same conditions, with essentially the same materials, processes, etc., and which are considered subject to the same failure. Acceptance and shipment of the product shall be discontinued until corrective action, acceptable to the qualifying activity has been taken. After the corrective action has been taken, group B inspection shall be repeated on additional sample units (all inspection, or the inspection which the original sample failed, at the option of the qualifying activity). Groups A and B inspection may be reinstituted; however, final acceptance and shipment shall be withheld until the group B inspection has shown that the corrective action was successful. In the event of failure after reinspection, information concerning the failure shall be furnished to the cognizant inspection activity and the qualifying activity.

4.8.3 Inspection of packaging. Except when commercial packaging is specified, the sampling and inspection of the preservation and interior package marking shall be in accordance with the group A and B quality conformance inspection requirements of MIL-P-116. The sampling and inspection of the packing and marking for shipment and storage shall be in accordance with the quality assurance provisions of the applicable container specification and the marking requirements of MIL-STD-129. The inspection of commercial packaging shall be as specified in the contract (see 6.2).

4.9 Methods of inspection.

4.9.1 Test criteria.

4.9.1.1 Frequency and equivalent-resistance measurements. For crystal units with long wire-lead terminals, the test point shall be 1/4 inch ±1/16 from the holder base. The remainder of the lead shall be shielded. For crystal units with metal holders, measurement of frequency or equivalent resistance, or both, shall be made with the holder grounded.

4.9.1.1.1 At room or other reference temperature (see 6.5.8). With the crystal unit operating in the applicable test set (see 3.1 and 4.1.2.1.1) and in thermal equilibrium at the specified reference temperature, the frequency and equivalent resistance (see 6.5.4 and 6.5.5) shall be measured.

a. For crystal units designed for operation under noncontrolled temperature conditions, measurements shall be made with the units in thermal equilibrium at room temperature.
b. For crystal units designed for operation under controlled temperature conditions, measurements shall be made with the units in thermal equilibrium at the reference temperature specified (see 3.1).

4.9.1.2 Measurements before and after a test. When frequency and equivalent resistance are measured before and after a test for determining change during the test, both measurements shall be made with the crystal unit in thermal equilibrium at the same temperature ±1°C, and the drive level set at the same practical minimum. Measured changes in frequency and equivalent resistance during the test shall not exceed the respective maximum changes specified for the particular test. However, at minimum drive level, it is not necessary that the unit operate within the overall tolerances for frequency and equivalent resistance since a change in the drive level does affect the operating characteristics of the crystal, especially its frequency. All crystal units (including those designed for operation at antiresonance) shall be measured at series resonance.

4.9.1.3 Measurements after tests. When frequency and equivalent resistance are to be measured after a test to determine compliance with specified tolerances, the measurements shall be made at the specified drive level. For crystal units designed for operation under noncontrolled temperature conditions, measurements shall be made with the units in thermal equilibrium at room temperature. For crystal units designed for operation under controlled temperature conditions, measurements shall be made with the units in thermal equilibrium at the reference temperature.

Downloaded from http://www.everyspec.com

4.9.1.4 Drive-level adjustment. When rated drive level (see 3.1 and 6.5.9) is specified for a test, it shall be adjusted immediately before each test. No further adjustment shall be made between measurements during a temperature-run test (except in case of line voltage fluctuation or a test lasting longer than an hour).

4.9.2 Visual and mechanical inspection.

4.9.2.1 External. Crystal units shall be examined to verify that the external design, construction, physical dimensions, marking, and workmanship are in accordance with the applicable requirements (see 3.1, 3.4, 3.21 and 3.23 and table V).

4.9.2.1.1 Glass parts. A strong light and 10-power magnification shall be used to examine the glass parts (see 3.6.4 and 3.15.2).

4.9.2.1.2 Pin alinement. An applicable pin alinement test gage (see figure 1) or a shadowgraph shall be used to determine pin alinement (see 3.6.5). When bosses appear on the crystal unit, the gage must be relieved to admit them.

TABLE V. Defect classification for visual and mechanical inspection (external).

Requirement	Requirement paragraph	Defect classification
Design and construction:		
Dimensional tolerances, including pin-diameter and pin-spacing tolerances. (This also includes defects caused by excess solder.)	3.1, 3.4, and 3.6 thru 3.6.3	Major
Other than specified or approved holder - - - -	3.4.2	Major
Glass parts:		
Cracks (see 4.9.2.1.1) - - - - - - - - - - - -	3.6.4	Major
Pin alinement:		
Pins do not freely enter gage or pin alinement does not conform to dimensions as viewed on a shadowgraph (see 4.9.2.1.2) - - - - - - - -	3.6.5	Major
Marking:		
Incorrect or incomplete data marked - - - - - -	3.21	Major
Incorrect method, size, location, or center of marking - - - - - - - - - - - - - - - - - -		Minor
Workmanship:		
Missing, wrong, or defective parts - - - - - -	3.23	Major
Soldering fluxes and their residues not removed after soldering - - - - - - - - - - - -		Major
Loose solder or other foreign particles in crystal unit (checked by shaking unit) - - - -		Major
Burrs and sharp edges not removed from metal parts -		Minor
Incorrect mounting of holder cover to base - -		Major
Metal corroded - - - - - - - - - - - - - - - -		Major
Metal soiled or dented - - - - - - - - - - - -		Minor

4.9.2.2 Internal. Other than glass-enclosed crystal units shall be disassembled, and the interior shall be examined to verify that the internal design, construction and workmanship are in accordance with the applicable requirements (see 3.1, 3.5, 3.6, 3.6.6, and 3.23). The crystal-resonator shall be inspected with a 10X magnification while illuminated with a 300-foot-candle light source having a grazing angle of approximately 20 degrees. When internal inspection is required in group B inspection (table IV), and qualification inspection (table II), two crystal units from each 10 sample units of the frequency range for which qualification is sought shall be subjected to the internal inspection specified (see table VI). For glass-enclosed crystal units, internal inspection may be performed visually without disassembling. Measurement of wall thickness is not applicable for glass-enclosed crystal units.

Downloaded from http://www.everyspec.com

TABLE VI. Defects for visual and mechanical examination (internal). 1/

Requirement	Requirement paragraph
Design and construction:	
Design and construction not as specified - - - - - - -	3.1, 3.5, and 3.6
Frequency adjustment by abrasion halogen vapor coating, or mechanically applied loading materials - -	3.6.6
Bond strength:	
Requirement not met - - - - - - - - - - - - - - - - - -	3.20
Workmanship:	
Rosin, flux, or other foreign matter present - - - - -	3.23
Missing, wrong, or defective parts	
Part corroded, soiled, or fingermarked	

1/ All internal defects are major.

4.9.3 Solderability (see 3.7). Each wire-lead terminal shall be subjected to method 208 of MIL-STD-202.

4.9.4 Shock (specified pulse) (see 3.8). Crystal units shall be tested in accordance with method 213 of MIL-STD-202. The following details shall apply:

a. Test condition - C (100G).
b. Measurements are not required in group A inspection.
c. Measurements before and after test.

4.9.5 Vibration (see 3.9). Crystal units shall be tested in accordance with MIL-STD-202, using the method specified (see 3.1). The following details and exceptions shall apply:

a. Test and measurements before vibration - The frequency and equivalent resistance shall be measured as specified in 4.9.1.2 and 4.9.8.
b. Test method as specified - (see 3.1):
   Method 201 - 2 hours, or
   Method 204 - Test condition A, 3 hours.
c. Direction of motion - Specimens shall be rigidly mounted on the horizontal platform of a vibration machine so that the applied vibration shall be as follows:
   1. One-third of the units (to the nearest integral number) shall have the direction of vibration parallel to the pin length.
   2. The same number of units shall have the direction of vibration perpendicular to the largest surface.
   3. The remainder of the sample units shall have the direction of vibration perpendicular to the pin length and parallel to the largest surface.
d. Time of traverse of frequency range - 1 to 2 minutes (method 201).
e. Tests and measurements after vibration - The frequency and equivalent resistance shall be measured as specified in 4.9.1.2 and 4.9.8.

4.9.6 Reduced drive level (overtone units, and when specified, fundamental units see 3.1) (see 3.10). Crystal units shall be tested as specified in 4.9.6.1. The test specified in 4.9.6.2 may be applied in lieu of 4.9.6.1 for the purpose of group A inspection (see 4.8.1.3). For this latter purpose the test may be performed as part of the low temperature storage test (see 4.9.8.4).

4.9.6.1 Method I. Crystal units shall be tested using the required crystal impedance meter, modified and connected to a X-Y recorder as specified in figure 2. A resistor of the maximum value specified (see 3.1) shall be inserted in the crystal socket of the crystal impedance meter.

a. The CI meter is adjusted to the nominal crystal frequency. The screen voltage control is adjusted to provide a reasonable drive level, not exceeding the specified limit, when a resistor of the maximum specified equivalent resistance of the crystal type under test is inserted into the crystal socket. The screen voltage output terminals (VG2) on the CI meter are connected to the recorder X axis and with the recorder pen in the "pen up" position, the X axis amplifier is adjusted to a sensitivity of 5.0 volts per inch. The applicable VGI output terminals are then connected to the recorder Y axis. The Y axis amplifier is adjusted to a sensitivity of 0.5 volt per inch.

Downloaded from http://www.everyspec.com

b. SW1 is then closed and the recorder is adjusted (without changing the sensitivity) to position the pen in the lower left-hand corner of the chart. The recorder is then set to the "pen down" condition and SW1 is opened. The screen voltage will now increase and move the pen along the X axis as the 1,000 µF capacitor charges via R3 (15,000 ohms) and a Y axis reading will result when the screen voltage is such that oscillation starts. The pen will then move diagonally across the chart.

c. The recorder is then set to the "pen-up" condition and the resistor removed. SW1 is now closed while the crystal is inserted into the socket, the recorder set to the "pen down" condition and SW1 opened. The pen will again move along the X axis until a point is reached at which oscillation starts, then the pen will move diagonally across the chart. Upon completion of pen travel in the X direction (approximately 15 seconds) SW1 is closed and the crystal unit is removed from the test socket of the crystal impedance meter.

d. The time constant (15 seconds) of the 1,000 µF capacitor and the series 15,000 ohm resistor is of sufficient duration and linearity to enable a satisfactory curve to be plotted. This eliminates the need to reset the screen voltage control for each crystal in a group.

4.9.6.2 Method II. Crystal units shall be tested using the required CI meter, modified by replacement of the single-turn drive level adjustment potentiometer by a 10-turn potentiometer of equal value. The CI meter shall be connected through a suitable RF amplifier to a frequency counter. The drive level and frequency tuning controls shall be adjusted so that the nominal frequency of the crystal is properly displayed on the counter when a calibration resistor of the maximum value specified (see 3.1) is inserted in the crystal socket, but no frequency reading is obtained when this resistor is replaced by one of 10 percent greater value. If the crystal unit is then inserted into the CI meter, the counter shall properly display the crystal frequency. A 50 µAdc meter connected to the "meter jack" of the CI meter may be used as an indicator in lieu of the counter.

4.9.7 Capacitance, shunt (when specified see 3.1)(see 3.11). Crystal units shall be tested in accordance with method 305 of MIL-STD-202. The capacitance shall be measured from pin to pin, with the crystal holder ungrounded, at a frequency which is lower than the fundamental frequency of the unit, and at which the unit shows no oscillation response.

4.9.8 Frequency and equivalent resistance. Crystal units shall be inserted into the applicable test set (see 3.12) and measurements shall be taken under the following conditions as applicable.

4.9.8.1 Operating range (noncontrolled)(see 3.12). Measurements of frequency and equivalent resistance of crystal units, designed for operation under noncontrolled temperature conditions, shall be performed at the specific resonance and rated drive level (see 3.1 and 4.9.1.4). The temperature of the crystal unit shall be varied so as to traverse the entire operating range from low temperature to high temperature. For the operating temperature range of -55° to 105°C, the temperature range shall be traversed in 7 minutes minimum unless otherwise specified (see 3.1). For other operating temperature ranges, the time shall be proportional. Measurements of frequency and equivalent resistance shall be recorded continuously or at intervals of not over 3°C to ascertain that tolerances are not exceeded at any instant. The temperature of the end points shall be accurate to within ±1°C of specified temperatures. The end-point frequencies shall be within ±5 percent of the specified overall frequency tolerance when compared to the equilibrium frequency at these end-point temperatures. For example, if the specified frequency tolerance is ±0.005 percent (overall 100 parts per million (ppm)) then the end-point tolerance is 5 ppm. The temperature run shall be performed automatically from the low temperature to the high temperature using T/C Analyzer, Winslow Teletronics, Inc., Model TCA-1070, or equal. No manual adjustments shall be made to the test setup once the temperature run has begun. The unit shall not be disassembled, and indirect means shall be used for determining the temperature of the resonator. NOTE: This type of temperature run may cause some distortion of the frequency temperature characteristics.

4.9.8.2 Operating range (controlled) and frequency stability (see 3.12.2). The units shall not be disassembled, and indirect means shall be used for determining the temperature of the resonator. Measurements of frequency and equivalent resistance of a crystal unit, designed for operation under controlled temperature conditions, shall be performed at specified resonance (see 3.1) and rated drive level (see 4.9.8.4) as specified in 4.9.8.2.1 or 4.9.8.2.2.

Downloaded from http://www.everyspec.com

4.9.8.2.1 Method A - continuous. Measurement shall be taken continuously over the operating temperature range. The rate of temperature change shall not exceed 2°C per minute.

4.9.8.2.2 Method B - incremental. Measurements shall be taken over the operating temperature range at intervals no greater than 2-1/2°C. These measurements shall include the two extremes as well as the reference temperature, assuring that the resonator has reached thermal equilibrium before each measurement is made.

4.9.8.3 Operable range (controlled) (see 3.12.2). Crystal units designed for operation under controlled temperature conditions shall be subjected to a temperature run over the operable range (see 3.1). The rate of change of temperature shall not exceed 2.5°C per second. The units shall be monitored for continuous oscillation, however, measurements of frequency and equivalent resistance are not required.

4.9.8.4 Low temperature storage (see 3.12.3). Crystal units shall be subjected for 2 hours to a temperature equal to or lower than, the low end of the operable temperature range specified (see 3.1), and shall be measured with the crystal unit at a temperature no higher than the low end of the operable temperature range. Unless otherwise specified (see 3.1), fundamental mode crystals shall be measured for resistance as specified in 4.1.2.1.1 at nominal drive level. Crystal units for which a low drive level test is required (overtone units and fundamental units, when specified (see 3.1)) shall be measured at reduced drive level (see 4.9.6).

4.9.9 Unwanted modes.

4.9.9.1 Method I (fundamental units)(see 3.13). The test for unwanted modes shall be performed at room temperature on crystal units designed for operation under noncontrolled temperature conditions. For controlled temperature units, the test shall be performed with the crystal unit in thermal equilibrium at the reference temperature.

a. The test shall be performed at rated drive level (see 3.1).
b. Determine the value of maximum equivalent resistance (see 3.12). Insert a fixed resistor equal to this value in the test set. Adjust the output frequency of the test set to a frequency 20 percent lower than the specified frequency, and then to a frequency 20 percent higher than the specified frequency. The adjacent band of the test set, or another test set shall be used when necessary (see 6.2).
c. Record the dial settings of the tuning control on the test set obtained in b.
d. Replace the fixed resistor with the crystal unit. The test set should be at the plus 20 percent frequency setting before inserting the crystal unit.
e. Slowly vary the tuning control between the dial settings recorded in c, beginning with the setting 20 percent higher than the specified frequency, while monitoring the output signal.

4.9.9.2 Method II (overtone units) (see 3.13.2). Crystal units shall be tested using the test circuit in figure 3. The test shall be performed at room ambient temperature for all crystal units. A frequency range of approximately 200 kHz above and 200 kHz below the specified frequency shall be swept by the signal generator. S_1 shall be set in the open position for crystal units with operating frequencies below 12 MHz. For crystal units with operating frequencies above 12 MHz, S_1 shall be set in the closed position, the proper inductance value for L_2 shall be used, and C_1 shall be adjusted to parallel resonance the static capacitance (C_0), as evidenced by an indication of zero or minimum amplitude on the oscilloscope or recorder. The output oscilloscope or recorder shall be observed for unwanted modes.

4.9.10 Thermal shock.

4.9.10.1 Method I (not applicable to crystal units with glass holders) (see 3.14.1). Crystal units shall be tested in accordance with method 107, test condition B of MIL-STD-202 (with 1/2 hour for steps 1 and 3). Wire mounted low frequency crystal units (under 800 kHz) shall have a high ambient temperature of 100 $^{+3}_{-0}$°C for each temperature cycle. Measurements before and after the test shall be made in accordance with 4.9.1.2.

Downloaded from http://www.everyspec.com

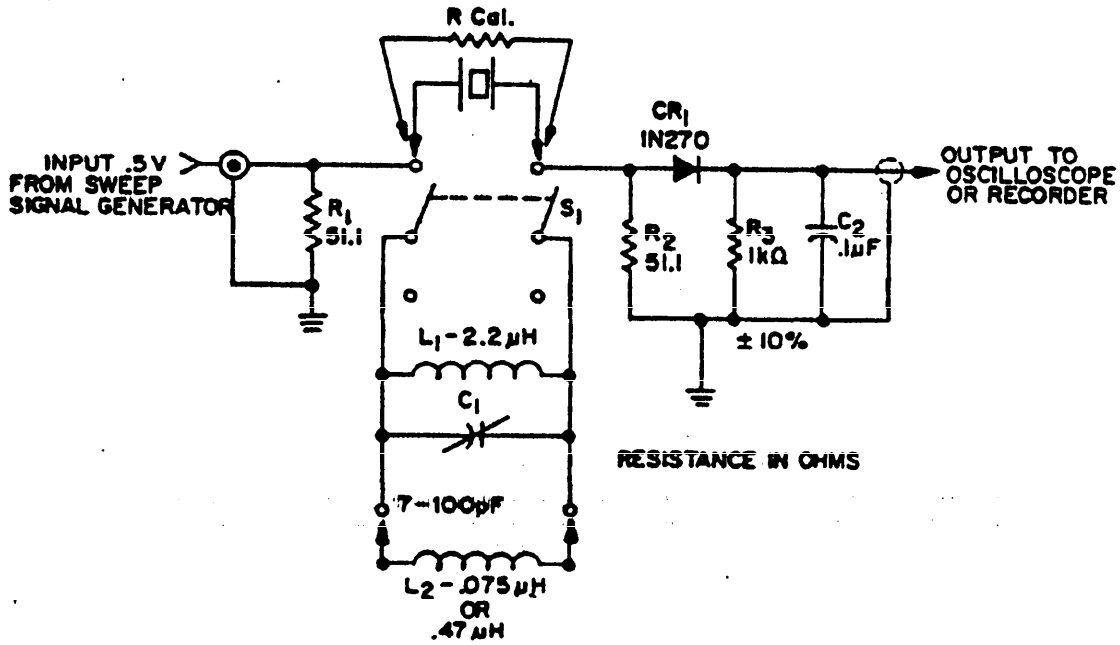

NOTE: R1 and R2 shall be a 1 percent film resistor

FIGURE 3. Unwanted modes test circuit.

4.9.10.2 Method II (applicable to crystal units with glass holders)(see 3.14.2). The crystal units shall be immersed in boiling water for 15 seconds ±1 and immediately thereafter be immersed in ice water for 5 seconds ±1. The volume of water shall be large enough so that its temperature will not be appreciably affected when the sample crystal units are introduced.

4.9.11 Seal (see 3.15). Crystal units shall be tested as specified in 4.9.11.1 or 4.9.11.2, as applicable.

4.9.11.1 Crystal units in metal holders. Crystal units in metal holders shall be tested in accordance with method 112 of MIL-STD-202. The following details and exceptions shall apply:

a. Test condition - C.
b. Procedure - III for evacuated metal holders; and IV for backfilled metal holders.
c. Leakage rate sensitivity - 10^{8} atm cm3/s.

4.9.11.2 Crystal units in glass holders. Crystal units in glass holders shall be subjected to three heat cycles, each cycle consisting of the following three steps:

a. Increase temperature to 100° ±5°C at a rate not faster then 2°C per minute.
b. Hold temperature at 100° ±5°C for 30 minutes.
c. Cool to room temperature at a rate not faster than 2°C per minute. Store for 24 hours, minimum. After this storage period, in a dark room with the crystal unit resting on a dark nonmetallic surface, bring an energized Tesla coil (Ecco High-Frequency Corporation Model G-4), or equal, into proximity with the end of the crystal unit opposite the terminals. The Tesla coil spark intensity shall be adjusted for a discharge of 1/8 to 3/16 inch from the metal probe tip to a grounded metal object. Maximum exposure time shall be 1 second.

(CAUTION: The Tesla coil power may be turned off when not in use; however, no further spark intensity adjustment shall be made.) When the Tesla coil probe is brought to within 1/2 inch of the unit, a characteristic blue glow shall be seen. Failure of the blue glow to appear is an indication of an unsatisfactory seal. In no case should a visible spark be seen between the Telsa coil and the crystal resonator. The Tesla coil probe should not be brought into direct contact with the crystal bulb or terminals.

Downloaded from http://www.everyspec.com

4.9.12 Salt spray (corrosion) (see 3.16). Crystal units shall be tested in accordance with method 101, test condition B, of MIL-STD-202. After this test, the unit shall be visually examined for evidence of excessive corrosion, and the frequency and equivalent resistance shall be measured as specified in 4.9.1.3 and 4.9.8.

4.9.13 Moisture resistance (see 3.17). Crystal units shall be tested in accordance with method 106 of MIL-STD-202. The following details and exceptions shall apply:

a. Mounting - Normal mounting means, except during measurements.
b. Initial measurements - Not applicable.
c. Subcycle - Step 7B, the vibration subcycle, shall be omitted.
d. Polarization and loading voltage - Not applicable.
e. Final measurement - After the drying period, frequency, equivalent resistance, and insulation resistance shall be measured. Insulation resistance shall be measured in accordance with method 302 of MIL-STD-202, using a test potential of 50 to 55 volts. This measurement shall be made from pin to pin and from each pin to the holder case.

4.9.14 Aging (see 3.18). Crystal units shall be maintained at the aging temperature for a continuous period of 30 days as follows:

Crystal type	Aging	Temperature
Noncontrolled	±5 ppm	85° ±2°C
Controlled	±5 ppm	85° ±2°C or reference temperature
Controlled	< ±5 ppm	reference temperature

The frequency shall be measured twice a week at intervals of not less than 2 days nor more than 4 days. The initial measurement of frequency shall be taken at the end of the first 24 hours, and the final measurement at the end of the 30-day test. The difference between the initial aging measurement temperature and subsequent measurement temperatures shall not exceed 0.5°C. All crystal units (including those designed for operation at antiresonance) shall be measured at series resonance whenever crystal impedance meters are used (see 4.1.2). When other test oscillators are employed, the crystal unit may be operated above the series-resonant frequency. The frequency resettability of the test set system shall be 5×10^{-7} for those crystal units which are rated at 5 ppm/month (.0005%). The frequency resettability for other crystal units shall be as specified (see 3.1). The drive level shall be as specified in 4.9.1.4. The same test set shall be used throughout the test. The crystal unit should remain in the test chamber throughout the test. If a condition brings the temperature of the units below the aging temperature for a time interval of more than 1 hour, no measurement shall be made until 24 hours after temperature restoration, and the 30-day test period shall be lengthened by the length of time that the temperature failed.

4.9.14.1 Accelerated aging (see 3.18.1). Crystal units shall be measured for frequency and resistance at room ambient temperature and then conditioned in an oven at 105° ±3°C for 168 hours. The crystal units shall then be removed from the oven and allowed to stabilize at the same room ambient temperature (±2°C). The crystal units shall then be measured again for frequency and resistance (see 4.9.8).

4.9.15 Terminal strength.

4.9.15.1 Terminal pull (see 3.19.1). Crystal units shall be tested in accordance with method 211 of MIL-STD-202. The following details shall apply:

a. Test condition - A.
b. Applied force - 4 pounds for pin terminals, and 2 pounds for wire-lead terminals, applied to each terminal.

Downloaded from http://www.everyspec.com

4.9.15.2 Terminal bend (applicable to crystal units with undercut pins)(see 3.19.2). Each terminal shall be subjected to method 211, test condition B, of MIL-STD-202. The following details and exceptions shall apply:

a. Applicable bending tool to be in accordance with figure 4. (Any convenient means may be used for holding the body or base of the crystal unit.) The tool shall engage that segment of the pin-terminals beyond the undercut portion.
b. Number of bending operations - Two (see 3.19.2).
c. The bending cycle shall start with a 15° ±2° bend in one direction, followed by a bend of 30° ±2° in the opposite direction, and completed by a bend 15° ±2° in the opposite direction, and completed by a bend 15° ±2° back to the starting position.

4.9.15.3 Wire-lead bend (applicable to crystal units with wire-lead terminals)(see 3.19.3). Crystal units shall be tested in accordance with method 211 of MIL-STD-202. The following details shall apply:

a. Test condition - C.
b. Applied load - 1 pound.

4.9.16 Bond strength (when specified see 3.1)(see 3.20). The strength of the bond between each wire, ribbon, or other support structure and the quartz resonator shall be tested in shear for "AT" resonators and in tension for resonators below 800 kHz, by gradually applying a force along the support member until the specified bond strength is reached (see 3.1). The full force shall be applied for not more than 1 minute. Breakage of the quartz resonator, during this test, shall not be construed as a bond-strength failure.

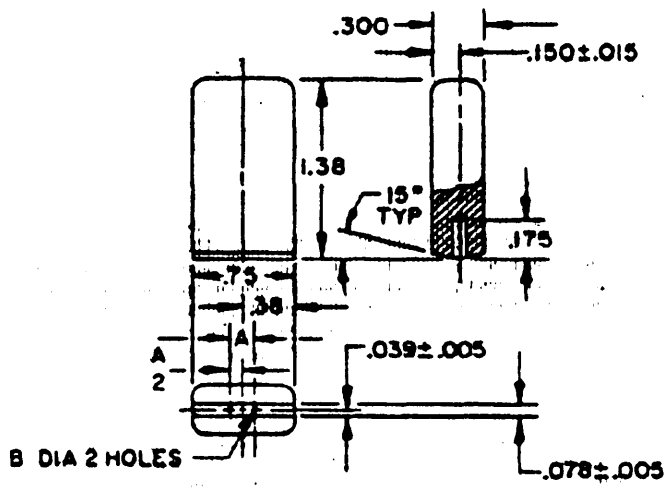

Nominal pin diameter	A	B
.040	.1920	.0520
.050	.4860	.0630

INCHES	MM	INCHES	MM
.005	.13	.150	3.81
.015	.38	.175	4.44
.039	.99	.1920	4.877
.040	1.02	.300	7.62
.050	1.27	.38	9.7
.0520	1.321	.4860	12.344
.0630	1.600	.75	19.0
.078	1.98	1.38	35.1

NOTES:
1. Dimensions are in inches.
2. Metric equivalents are given for general information only and are based upon 1.00 inch = 25.4 mm.
3. Unless otherwise specified, tolerances are ±.02 (.5 mm), ±.003 (.08 mm) and ±.0005 (.013 mm).

FIGURE 4. Tool for terminal bend test.

Downloaded from http://www.everyspec.com

5. PACKAGING

5.1 Preservation. Preservation - packaging shall be level A or C, or as specified (see 6.2).

5.1.1 Level A.

5.1.1.1 Cleaning. Crystal units shall be cleaned in accordance with MIL-P-116, process C-1.

5.1.1.2 Drying. Crystal units shall be dried in accordance with MIL-P-116.

5.1.1.3 Preservative application. Preservatives shall not be used.

5.1.1.4 Unit packaging. Crystal units (including crystal sets, see 3.21) shall be unit packaged one each or one set, as applicable, in accordance with MIL-P-116, method III insuring compliance with the applicable requirements of that specification. The unit container for crystal sets shall conform to PPP-B-566 or PPP-B-676.

5.1.1.5 Intermediate packaging. Crystal units, packaged as specified in 5.1.1.4, shall be placed in intermediate containers conforming to PPP-B-566 or PPP-B-676. Intermediate containers shall be uniform in size, shape, and quantities, shall be of minimum tare and cube, and contain multiples of five unit packages, not to exceed 100 unit packages. No intermediate packaging is required when the total quantity shipped to a single destination is less than 100 unit packages, or when crystal units are supplied as crystal sets.

5.1.2 Level C. Crystal units (including those supplied as crystal sets), shall be clean, dry, and packaged in a manner that will afford adequate protection against corrosion, deterioration and physical damage during shipment from supply source to the first receiving activity. This level may conform to the contractor's commercial practice when such meets the requirements of this level.

5.2 Packing. Packing shall be level A, B, or C, or as specified (see 6.2).

5.2.1 Level A. The packaged crystal units shall be packed in fiberboard containers conforming to PPP-B-636, class weather resistant, style optional, and special requirements. In lieu of the closure and waterproofing requirement in the appendix of PPP-B-636, closure and waterproofing shall be accomplished by sealing all seams, corners and manufacturer's joint with tape, 2 inches minimum width, conforming to PPP-T-60, class 1 or PPP-T-76. Banding (reinforcement requirements) shall be applied in accordance with the appendix to PPP-B-636 using nonmetallic or tape banding only.

5.2.2 Level B. The packaged crystal units shall be packed in fiberboard containers conforming to PPP-B-636, class domestic, style optional, special requirements. Closures shall be in accordance with the appendix thereto.

5.2.3 Level C. The packaged crystal units shall be packed in shipping containers in a manner that will afford adequate protection against damage during direct shipment from the supply source to the first receiving activity. These packs shall conform to the applicable carrier rules and regulations and may be the contractor's commercial practice when such meets the requirements of this level.

5.2.4 Unitized loads. Unitized loads, commensurate with the level of packing specified in the contract or order, shall be used whenever total quantities for shipment to one destination equal 40 cubic feet or more. Quantitites less than 40 cubic feet need not be unitized. Unitized loads shall be uniform in size and quantities to the greatest extent practicable.

5.2.4.1 Level A. Crystal units, packed as specified in 5.2.1, shall be unitized on pallets in conformance with MIL-STD-147, load type I, with a fiberboard cap (storage aid 4) positioned over the load.

Downloaded from http://www.everyspec.com

5.2.4.2 Level B. Crystal units, packed as specified in 5.2.2, shall be unitized as specified in 5.2.4.1, except that the fiberboard caps shall be class domestic.

5.2.4.3 Level C. Crystal units, packed as specified in 5.2.3, shall be unitized with pallets and caps of the type, size and kind commonly used for this purpose. These unitized loads shall conform to the applicable carrier rules and regulations and may be the contractor's commercial practice when such meets the requirements of this level.

5.3 Marking. In addition to any marking required by the contract (see 6.1), each unit package, intermediate and exterior container shall be marked in accordance with MIL-STD-129.

5.4 General.

5.4.1 Exterior containers. Exterior containers (see 5.2.1, 5.2.2 and 5.2.3) shall be of a minimum tare and cube consistent with the protection required and shall contain equal quantities of identical stock numbered items to the greatest extent practicable.

5.4.2 Packaging inspection. The inspection of these packaging requirements shall be in accordance with 4.7.3.

5.4.3 Army procurements.

5.4.3.1 Level A (maximum military protection) unit and intermediate packaging. All unit and intermediate containers shall be either weather (or water) resistant or overwrapped with waterproof barrier materials (see 5.1.1.4 and 5.1.1.5).

5.4.3.2 Level A (maximum military protection) and Level B (minimum military protection) packing. For level A packing the fiberboard containers shall not be banded but shall be placed in a close fitting box conforming to PPP-B-601, overseas type; PPP-B-621, class 2 style 4 or PPP-B-585, class 3, style 2 or 3. Closure and strapping shall be in accordance with applicable container specification except that metal strapping shall conform to QQ-S-781, type I finish A. When the gross weight exceeds 200 pounds or the container length and width is 48 x 24 inches or more and the weight exceeds 100 pounds, 3 x 4 inch skids (laid flat) shall be applied in accordance with the requirements of the container specification. If not described in the container specification, the skids shall be applied in a manner which will adequately support the item and facilitate the use of material handling equipment. For level B packing, fiberboard boxes shall be weather resistant as specified in level A and the containers shall be banded (see 5.2.1 and 5.2.2).

5.4.3.3 Level A and B unitization. For level A and B unitization, softwood pallets conforming to NN-P-71, type IV, size 2 shall be used. Weather resistant fiberboard caps shall also be used for level B unitization. The loads for both levels shall be bonded to the pallets by strapping conforming to QQ-S-781, type I, finish A or shrink film (see 5.2.4.1 and 5.2.4.2).

5.4.3.4 Commercial packaging. Commercial packaging (including unit and intermediate packaging, packing and marking) shall be in accordance with MIL-STD-1188.

6. NOTES.

6.1 Intended use. Crystal units covered by this specification are intended for use in military systems for fire control and navigation, ground support equipments, frequency standards, and inner and outer space communication.

6.2 Ordering data. Procurement documents should specify the following:

a. Title, number, and date of this specification.
b. Title, number, and date of the applicable specification sheet and the complete type designation (see 1.2.1 and 3.1).
c. Frequency or frequencies required.
d. If a procurement contract permits the addition, omission, relaxation, or modification of any requirement(s) of this specification, the type designation (see 1.2.1) is not to be used to identify the crystal unit (see 3.21).
e. Any additional marking required on crystal unit (see 3.21).
f. Levels of preservation-packaging and packing required (see 5.1 and 5.2).
g. Special marking required (see 5.3).
h. Whether crystal unit sets are to be packaged in a hinged-cover and clasp-style plastic box, or in an enameled or lacquered metal or wooden box (see 3.22).
i. If 0.500 inch wire-lead terminals are required (see 3.6.7).
j. Inspection of commercial packing (see 4.8.3).

6.3 First article. When a first article is required, it shall be tested and approved under the appropriate provisions of 7-104.55 of the Armed Services Procurement Regulation. The first article should be on crystal units not covered by specification sheets. The first article should consist of the same sample units as qualification. The contracting officer should include specific instructions in all procurement instruments, regarding arrangements for examinations, test and approval of the first article.

Downloaded from http://www.everyspec.com

6.4 Qualification. With respect to products requiring qualification, awards will be made only for products which are at the time set for opening of bids, qualified for inclusion in the applicable Qualified Products List whether or not such products have actually been so listed by that date. The attention of the contractors is called to these requirements, and manufacturers are urged to arrange to have the products that they propose to offer to the Federal Government tested for qualification in order that they may be eligible to be awarded contracts for the products covered by this specification. The activity responsible for the Qualified Products List is U.S. Army Electronics Research and Development Command, Adelphi, MD; information pertaining to qualification of products may be obtained from the Defense Electronics Supply Center (DESC-EQ), Dayton, OH 45444.

6.5 Definitions. The following definitions apply:

6.5.1 Crystal unit. A crystal unit is an assembly that consists of a quartz resonator suitably mounted in a crystal holder.

6.5.2 Crystal holder. A crystal holder is the sealed enclosure in which a quartz resonator is mounted; it includes a cover, a base or other means of closure and suitably insulated pins or terminals. Designation of a holder does not designate the mounting structure for the resonator.

6.5.3 Frequency range. The frequency range of a crystal unit type is the range from minimum to maximum in which any frequency within this range may be specified.

6.5.4 Specified frequency. The specified frequency is the frequency at which the crystal unit is designed to operate under the conditions specified by the specification sheet.

6.5.5 Equivalent resistance. The equivalent resistance of a crystal unit is defined as follows:

a. For crystal units designed to operate at series resonance, equivalent resistance is defined as the equivalent ohmic resistance of the unit when operating in the specified crystal impedance meter adjusted for the rated drive level and tuned to the specified crystal unit frequency.
b. For crystal units designed to operate at parallel or antiresonance, equivalent resistance is defined as the equivalent ohmic resistance of the unit and a series capacitor of the specified load value, when operating in the specified crystal impedance meter adjusted for rated drive level and tuned to the specified crystal unit frequency.

6.5.6 Operating temperature range. The operating temperature range of a crystal unit is the ambient temperature range over which the unit will oscillate in accordance with the specified frequency and equivalent resistance requirements.

6.5.7 Operable temperature range. The operable temperature range of a crystal unit is the temperature range over which units designed for controlled temperature conditions will oscillate.

6.5.8 Reference temperature. The reference temperature is the ambient temperature at which certain crystal parameter measurements are made.

a. For controlled temperature units the reference temperature is the midpoint of the controlled operating temperature range.
b. For noncontrolled temperature units, the reference temperature selected is normally room ambient temperature 23° ±1°C.

6.5.9 Rated drive level. The rated drive level is the power dissipation level at which the crystal unit is designed to operate.

6.5.10 Production traveler. Documentation accompanying the crystal unit during production.

6.6 Engineering information. Copies of engineering reports may be obtained from the Office of Technical Services, U.S. Department of Commerce, Washington, D. C. ref P.B. 111586R, and Defense Documentation Center, Cameron Station, Virginia, ref AD 110448. Information relative to the frequency resettability accuracy of Crystal Impedance Meters TS-330/TSM and TS-683/TSM is provided in USASRDL Report No. 2118 and USAELRDL Report No. 2366, respectively. Copies of Report No. 2118 may be obtained from the sources indicated above as Ref 149415 or Ref AD 2337335. Copies of Report No. 2366 may be obtained from these sources by referencing its title, "Frequency Repeatability of Crystal Impedance Meter TS-683/TSM," dated May 1963. General information is also available, such as IEEE 177 and IEC 122.

Downloaded from http://www.everyspec.com

6.7 International standardization agreement. Certain provisions of this specification are the subject of international standardization agreement, NATO NEPR 39. When amendment, revision, or cancellation of this specification is proposed, which will affect or violate the international agreement concerned, the preparing activity will take appropriate reconciliation action through international standardization channels including departmental standardization offices, if required. The Unites States, by international agreement NEPR 39, has agreed to the use of types of crystal units designated by NATO Nomenclature, i.e., NXT1/A, on new equipment design. These NATO types are shown in supplement 1 to this specification and should be used whenever possible.

6.8 Government reference standard test sets. Government reference standard test set may be obtained from the Communications and Electronics Material Readiness Command (CERCOM) ATTN: DRSEL-PA, FORT Monmouth, NJ 07703.

All CIMs requiring repair, replacement, calibration, or return upon contract completion will, with CERCOM approval, be shipped to the following address:

Transportation Officer
Tobyhanna Army Depot
Tobyhanna, PA 18466
M/F Special Project - Gages

6.9 Manufacturer's code. Manufacturer's code is listed in publication NAVSHIPS 0967-190-4010, "Manufacturer's Designating Symbols". All requests for this publication should be directed to the Commanding officer, Naval Publications and Forms Center, 5801 Tabor Avenue, Philadelphia, PA 19120.

6.10 Changes from previous issue. Asterisks are not used in this revision to identify changes with respect to the previous issue, due to the extensiveness of the changes.

Custodians:
Army - ER
Navy - EC
Air Force - 85

Review activities:
Army - MI, SG, SM
Navy - SH
Air Force - 11, 99
DLA - ES

User activities:
Army - AR
Navy - AS, CG, MC, OS
Air Force - 17, 19

Preparing activity:
Army - ER

Agent:
DLA - ES

(Project 5955-0514)

Downloaded from http://www.everyspec.com

APPENDIX I

PROCEDURE FOR QUALIFICATION INSPECTION

10. SCOPE

10.1 This appendix details the procedure to submit samples with related data for qualification of crystal units covered by this specification.

20. SUBMISSION

20.1 Sample. Unless otherwise specified, 30 sample units of each crystal type, except for grouping permitted in table VII, shall be submitted. If it is desired to qualify for a limited frequency band within the crystal unit range, 30 sample units shall be required in that band. Ten of the 30-unit group shall be at the lower end, 10 near the middle, and 10 at the upper end of the frequency range over which qualification is sought. A single frequency crystal unit may be qualified upon submission of ten samples at the desired frequency. No failures are permitted.

20.2 Certification of material. When submitting samples for qualification, the manufacturer shall submit certification in duplicate, that the materials used in his components are in accordance with the applicable specification requirements.

30. EXTENT OF QUALIFICATION

30.1 Qualification obtained for one type crystal unit shall constitute qualification of all others of the same group that follow it in the group listing in table VII.

30.2 If a contractor qualifies for a limited frequency band within the frequency range of a crystal unit, corresponding limitation shall apply to the automatic qualification of other types. In no case shall the frequency range of the type receiving automatic qualification extend beyond the frequency range for which qualification has been obtained.

30.3 It is not necessary to qualify over the frequency range of a unit type; only that frequency range will be required for which the manufacturer has production capability. If, subsequently, a manufacturer wishes to qualify his product over a wider range of frequencies, he shall then request instructions from the Government qualifying activity.

30.4 If the extension of the frequency range for the crystal type does not exceed 20 percent of the total range, only the following tests are required for qualification:

Reduced drive level
Frequency and equivalent resistance
  Room temperature (noncontrolled)
  Operating temperature
  Frequency stability
  Operable temperature range
  Temperature run
  Operating range (noncontrolled)
  Operating range (controlled)
Unwanted modes
Seal

Downloaded from http://www.everyspec.com

TABLE VII. Grouping for qualification 1/

Group No.	Crystal Unit Types 2/ 3/
4/ 1	CR-15B/U†, CR-16B/U
2	CR-37A/U†
2A	CR-42A/U
3	CR-45/U†
4	CR-38A/U†, CR-50A/U
5	CR-63B/U†, CR-46B/U, CR-25B/U, CR-147/U
5A	CR-104/U, CR-47A/U, CR-26A/U
6	CR-66/U†
6A	CR-68/U
7	CR-69A/U†, CR-78A/U, CR-64/U, CR-79/U, CR-97/U
7A	CR-80A/U, CR-106/U, CR-139/U
8	CR-85/U†, CR-130/U, CR-125/U, CR-119/U, CR-18A/U, CR-58A/U, CR-19A/U, CR-140/U, CR-89/U, CR-6A/U, CR-5A/U, CR-8A/U
8A	CR-62/U, CR-36A/U, CR-27A/U, CR-35A/U, CR-28A/U, CR-131/U
9	CR-1D/U†, CR-91/U, CR-96/U, CR-95/U
10	CR-114/U†, CR-124/U
11	CR-112/U†, CR-134/U, CR-136/U, CR-118/U, CR-129/U, CR-137/U
11A	CR-135/U, CR-109/U
12	CR-148/U†, CR-52A/U
12A	CR-65/U
13	CR-152/U†, CR-76A/U, CR-77/U, CR-67A/U, CR-117/U, CR-55A/U, CR-72/U, CR-81/U
13A	CR-84/U, CR-61/U
14	CR-111/U†, CR-128/U
14A	CR-113/U
15	CR-54A/U†
15A	CR-75/U
16	CR-80/U†, CR-83/U, CR-141/U, CR-56A/U, CR-82/U
16A	CR-59A/U
17	CR-116/U†, CR-105/U, CR-110A/U, CR-149/U, CR-98/U, CR-151/U, CR-107/U
17A	CR-123/U, CR-122/U
18	CR-145/U†
18A	CR-74/U, CR-108/U
19	CR-100/U CR-150/U
	Crystal units which must be individually qualified are as follows: CR-24/U, CR-33A/U, CR-43/U, CR-51A/U, CR-53A/U, CR-71/U, CR-73/U, CR-86/U, CR-87/U, CR-88A/U, CR-90/U, CR-94/U, CR-99A/U, CR-100/U, CR-101/U, CR-102/U, CR-103/U, CR-120/U, CR-121/U, CR-126/U, CR-127/U, CR-132/U, CR-133/U, CR-138/U, CR-142/U, CR-144/U, CR-146/U, CR-150/U

1/ See 30.1 and 30.2.

2/ Qualification of one crystal unit type constitutes qualification of all others of the same group that follow it in the group listing.

3/ See 30.3.

4/ The pairs of bracketed groups may be qualified by a single set of samples for each pair, provided (1) the samples are for the type indicated by a dagger (†), and (2) the samples are tested for and successfully pass the temperature-run test over the operating range for the controlled types. As an alternative procedure, when one group of noncontrolled crystal units has been qualified, a separate set of samples may be submitted for the leading item of the bracketed controlled group; in that event only the temperature-run test need be made.

Downloaded from http://www.everyspec.com

INSTRUCTIONS: In a continuing effort to make our standardization documents better, the DoD provides this form for use in submitting comments and suggestions for improvements. All users of military-standardization documents are invited to provide suggestions. This form may be detached, folded along the lines indicated, taped along the loose edge *(DO NOT STAPLE)*, and mailed. In block 5, be as specific as possible about particular problem areas such as wording which required interpretation, was too rigid, restrictive, loose, ambiguous, or was incompatible, and give proposed wording changes which would alleviate the problems. Enter in block 6 any remarks not related to a specific paragraph of the document. If block 7 is filled out, an acknowledgement will be mailed to you within 30 days to let you know that your comments were received and are being considered.

NOTE: This form may not be used to request copies of documents, nor to request waivers, deviations, or clarification of specification requirements on current contracts. Comments submitted on this form do not constitute or imply authorization to waive any portion of the referenced document(s) or to amend contractual requirements.

(Fold along this line)

(Fold along this line)

DEPARTMENT OF THE ARMY

NO POSTAGE NECESSARY IF MAILED IN THE UNITED STATES

OFFICIAL BUSINESS
PENALTY FOR PRIVATE USE $300

BUSINESS REPLY MAIL
FIRST CLASS PERMIT NO. 12062 WASHINGTON D. C.
POSTAGE WILL BE PAID BY THE DEPARTMENT OF THE ARMY

Commander
US Army Avionics Research and Development Activity
ATTN: DAVAA-S/PE
Fort Monmouth, NJ 07703

Downloaded from http://www.everyspec.com

STANDARDIZATION DOCUMENT IMPROVEMENT PROPOSAL

(See Instructions – Reverse Side)

1. DOCUMENT NUMBER	2. DOCUMENT TITLE

3a. NAME OF SUBMITTING ORGANIZATION	4. TYPE OF ORGANIZATION *(Mark one)*
	☐ VENDOR
	☐ USER
b. ADDRESS *(Street, City, State, ZIP Code)*	☐ MANUFACTURER
	☐ OTHER *(Specify)*: _____

5. PROBLEM AREAS

a. Paragraph Number and Wording:

b. Recommended Wording:

c. Reason/Rationale for Recommendation:

6. REMARKS

7a. NAME OF SUBMITTER *(Last, First, MI)* – Optional	b. WORK TELEPHONE NUMBER *(Include Area Code)* – Optional
c. MAILING ADDRESS *(Street, City, State, ZIP Code)* – Optional	8. DATE OF SUBMISSION *(YYMMDD)*

DD FORM 1426 PREVIOUS EDITION IS OBSOLETE.