Downloaded from http://www.everyspec.com

MILITARY SPECIFICATION

CLOTH, LAMINATED, ALUMINIZED (PARA-ARAMID/PBI BASE)

This specification is approved for use by all Departments and Agencies of the Department of Defense.

1. SCOPE

1.1 Scope. This specification covers the requirements for a lightweight knitted, aluminized, para-aramid/PBI blend fabric.

2. APPLICABLE DOCUMENTS

2.1 Government documents.

2.1.1 Specifications, standards, and handbooks. The following specifications, standards, and handbooks form a part of this specification to the extent specified herein. Unless otherwise specified, the issues of these documents shall be those listed in the issue of the Department of Defense Index of Specifications and Standards (DODISS) and supplement thereto, cited in the solicitation.

Beneficial comments (recommendations, additions, deletions) and any pertinent data which may be of use in improving this document should be addressed to: Officer in Charge, Navy Clothing and Textile Research Facility, 21 Strathmore Road, Natick, MA 01760-2490 by using the self-addressed Standardization Document Improvement Proposal (DD Form 1426) appearing at the end of this document or by letter.

AMSC N/A FSC 8305

DISTRIBUTION STATEMENT A. Approved for public release, distribution is unlimited.

Downloaded from http://www.everyspec.com

SPECIFICATION

FEDERAL

QQ-S-766 - Steel Plate, Sheet, and Strip-corrosion Resisting
CCC-C-419 - Cloth, Duck, Cotton, Unbleached, Plied-yarns, Army and Numbered
PPP-P-1136 - Packaging of Coated (Plastic; Rubber) and Laminated Fabrics

STANDARDS

FEDERAL

FED-STD-191 - Textile Test Methods

MILITARY

MIL-STD-105 - Sampling Procedures and Tables for Inspection by Attributes

(Copies of specifications, standards, drawings, and publications required by contractors in connection with specific procurement functions should be obtained from the procuring activity or as directed by the contracting officer.)

2.2 Other publications. The following document(s) form a part of this specification to the extent specified herein. Unless otherwise specified, the issues of the documents which are DOD adopted shall be those listed in the issue of the DODISS specified in the solicitation. Unless otherwise specified, the issues of documents not listed in the DODISS shall be the issue of the nongovernment documents which is current on the date of the solicitation.

AMERICAN SOCIETY FOR TESTING AND MATERIALS

ASTM D 1424 Tear Resistance of Woven Fabrics by Falling Pendulum (Elmendorf) Apparatus

(Application for copies should be addressed to the American Society for Testing and Materials, 1916 Race Street, Philadelphia, PA 19103.)

2.3 Order of precedence. In the event of a conflict between the text of this specification and the references cited herein the text of this specification shall take precedence. Nothing in this specification, however, shall supersede applicable laws and regulations unless a specific exemption has been obtained.

3. REQUIREMENTS

3.1 Standard sample. When a standard sample is available, the finished cloth shall be equal to or better than the standard sample with respect to all characteristics for which the standard sample is referenced (see 6.3).

Downloaded from http://www.everyspec.com

3.2 First article. When specified, the contractor shall furnish sample unit(s) for first article inspection and approval (see 4.3 and 6.2).

3.3 Materials.

3.3.1 Fiber. The fiber content shall be a 60/40% intimate blend of para-aramid and PBI (polybenzimidazole). The use of fiber other than the approved is prohibited (see 6.4). The fiber shall be tested as specified in 4.4.1.1.

3.3.2 Base fabric. The base fabric shall be a queenscord made by using a 2 bar raschel knitting machine. The warp yarn shall be 40 singles cotton count. The cloth shall conform to the physical requirements listed in Table I when tested as specified in 4.4.1.1.

TABLE I. Base cloth requirements

Characteristics	Minimum	Maximum
Weight, oz/yd^2 (g/m^2)	3.5 (118.7)	4.5 (152.6)
Wales per inch (2.54 cm)	20 (20)	-
Courses per inch (2.54cm)	24 (24)	-
Bursting Strength, lbs. (N)	250 (1113)	

3.3.2.1 Knit pattern The guide bar stitch pattern shall be as follows when tested as specified in 4.4.1.1:

Course 4
Course 3
Course 2
Course 1

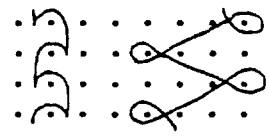

1 0 4 3 2 1 0
Bar #1 Bar #2

Front Guide Bar #1 1-0/0-1
Back Guide Bar #2 3-4/1-0

3.3.2.2 Finish. The base cloth shall be scoured (see 4.4.1.1).

3.3.3 Aluminized film. Pure aluminum shall be vacuum deposited on both sides of polyester film to create a highly reflective surface (see 4.5).

3.3.4 Lamination. The aluminized film shall be applied to one side of the base cloth with a suitable adhesive. The film shall be laminated to the base cloth by calender, or other suitable method. The laminated cloth shall conform to the physical requirements in Table II when tested as specified in 4.5.

Downloaded from http://www.everyspec.com

TABLE II. Laminated cloth requirements

Characteristics	Minimum	Maximum
Weight, oz/yd^2 (g/m^2)	-	7.0 (237)
Tear strength, lbs (N):		
Wale	4.0 (17.8)	-
Course	4.0 (17.8)	-
Stiffness, bending moments, inch-lbs (N.m):		
Wale	-	0.013 (0.0015)
Course	-	0.009 (0.001)
Wet flexibility	No evidence of cracking or delamination of aluminized film from the adhesive coating and/or base cloth.	
Adhesion of aluminized film	No evidence of separation of aluminized film from the adhesive coating and/or base cloth.	
Adhesion after wet flexing	No evidence of separation of aluminized film from the adhesive coating and/or base cloth.	
Blocking, scale rating	No blocking: Cloth and laminated surfaces are free.	
Flame resistance, vertical (Wale direction only):		
After flame time, seconds	-	2.00
After glow time, seconds	-	50.00
Char length, inches (cm)	-	1.50 (3.8)
Flexibility at low temperature	No sign of cracking.	
Reflectivity after abrasion	No visual discoloration of blotter. No evidence of flaking of aluminized film.	

3.4 Width. The width of the finished cloth shall be as specified by the procuring agency (see 6.2).

3.5 Length and put-up. Unless otherwise specified (see 6.2), the cloth shall be furnished in continuous lengths, each not less than 40 yards. Each length shall be put-up in full width rolls, aluminized side facing outwards, as specified in 5.1.

Downloaded from http://www.everyspec.com

3.6 Tickets. Each roll shall have an identification ticket conforming to the requirements of PPP-P-1136 attached to the selvage at the end of the cloth. In addition to the markings specified, the date (month and year) of aluminization shall be shown on the ticket.

3.7 Workmanship. The finished laminated cloth shall conform to the quality established by this specification. The occurrence of defects shall not exceed the specified acceptable quality level.

4. QUALITY ASSURANCE PROVISIONS

4.1 Responsibility for inspection. Unless otherwise specified in the contract, the contractor is responsible for the performance of all inspection requirements as specified herein. Except as otherwise specified in the contract or order, the contractor may use his own or any other facilities suitable for performance of the inspection requirements specified herein, unless disapproved by the Government. The Government reserves the right to perform any of the inspections set forth in the specification where such inspections are deemed necessary to assure supplies and services conform to prescribed requirements.

4.1.1 Responsibility for compliance. All items must meet all requirements of sections 3 and 5. The inspection set forth in this specification shall become a part of the contractor's overall inspection system or quality program. The absence of any inspection requirements in the specification shall not relieve the contractor of the responsibility of assuring that all products or supplies submitted to the Government for acceptance comply with all requirements of the contract. Sampling in quality conformance does not authorize submission of known defective material, either indicated or actual, nor does it commit the Government to acceptance of defective material.

4.1.2 Certificate of compliance. Where certificates of compliance are submitted, the Government reserves the right to check test such items to determine the validity of the certification.

4.2 Classification of inspection. The inspection requirements specified herein are classified as follows:

1. First article inspection (see 4.3).
2. Quality conformance inspection (see 4.4).

4.3 First article inspection. When required, (see 3.2 and 6.2) the first article shall be visually examined for appearance, color and finish and shall be tested for physical and chemical properties in accordance with methods specified in 4.5.

4.4 Quality conformance inspection. Sampling for inspection shall be performed in accordance with MIL-STD-105, except where otherwise indicated.

Downloaded from http://www.everyspec.com

4.4.1 Component and material inspection. In accordance with 4.1 above, components and materials shall be inspected and tested in accordance with the requirements of referenced specifications, drawings, and standards unless otherwise excluded, amended, modified, or qualified in this specification or applicable purchase document.

4.4.1.1 Testing of components. In addition to the quality assurance provisions of the subsidiary specifications, the base cloth shall be tested wherever applicable in accordance with the referenced test methods of FED-STD-191 and for characteristics listed in Table III. The sample unit for the base cloth shall be 1/2 yard (.45m) full width. The sample size (number of sample units) shall be as specified in Table V. The lot size shall be expressed in units of one yard each. The lot shall be unacceptable if one or more units fail to meet any requirement specified.

TABLE III. Test methods - base cloth

Characteristics	Requirement Paragraph	Test Method
Fiber content	3.3.1	1/
Weight	3.3.2	5041
Wales per inch	3.3.2	Visual
Courses per inch	3.3.2	Visual
Bursting Strength	3.3.2	5120
Yarn size	3.3.2	1/
Knit pattern	3.3.2.1	1/
Finish	3.3.2.2	1/

1/ A certificate of compliance shall be accepted for this characteristic.

4.4.2 Examination of the end item. Examination of the end item shall be in accordance with 4.4.2.1 through 4.4.2.3.

4.4.2.1 Yard-by yard examination. The required yardage shall be inspected on the aluminized side for the defects listed below. All defects found shall be counted regardless of the proximity of one to the other, except where two or more defects represent a single local condition of the cloth, in which case only one defect shall be counted. A continuous defect shall be counted as one defect for each wale-wise (vertical direction) yard (0.91m) or fraction thereof in which it occurs. The sample unit for this examination shall be one linear yard (0.91m). The sample size shall be in accordance with inspection level II of MIL-STD-105. The acceptable quality level, expressed in defects per 100 units, shall be 4.0. The lot size shall be expressed in units of 1 linear yard (0.91m) each. An approximate equal number of yards (0.91m) shall be examined from each roll selected. The number of rolls from which the sample is selected shall be in accordance with Table IV. No more than 1 roll shall be selected from any container.

Downloaded from http://www.everyspec.com

Defects
Any crease or wrinkle resulting in doubling or adhesion that cannot be corrected by manual pressure.
Any cuts, holes, or tears.
Any missing or thinly laminated area (except selvages).
Any discoloration (spot, stain or streak).
Blisters or flakiness.
Any tunnel or delamination of aluminized film.
Aluminized film improperly adhering to fabric.
Any hole in the knitted fabric 1/4 inch or more.
Any irregularity of the knitted fabric causing a rough area or protrusion on the aluminized surface.
Any multiple-run in the knitted fabric that results in a weak area of 1/4 square inch or more.
Any puckered or wavy fabric.
Abrasion mark.

4.4.2.2 Overall examination. Each defect listed below shall be counted not more than once in each roll examined. The sample unit shall be one roll. The sample size (number of rolls selected as sample) for this examination and the acceptance number (maximum number of defects acceptable) shall be as shown in Table IV. The rolls selected for the yard-by-yard examination shall be included in this examination.

Defects
Objectionable odor.
Lamination not uniform, mottled, blotchy or spotted.
Selvage beaded, corded, or loopy.
Selvage rolled, wrinkled or folded.
Overall uncleanness.
Width less than specified.
Cloth not rolled with aluminized side facing outward.

TABLE IV. Sample size

Lot size in yards(0.91m)	Sample size in rolls	Maximum number of defects acceptable
1200 or less 1/	3	0
1201 up to and including 3200	5	0
3201 up to and including 10,000	8	0
10,001 up to and including 35,000	13	0
35,001 up to and including 150,000	20	1
150,001 and over	32	2

1/ If lot contains fewer than 3 rolls, each roll in the lot shall be examined.

Downloaded from http://www.everyspec.com

4.4.2.3 Examination for length.

4.4.2.3.1 Individual rolls. During the yard-by-yard examination, each roll in the sample shall be examined for gross length, number and length of pieces in roll. Any gross length found to be less than 40 yards (36.58m) or any gross length found to be more than 2 yards (1.83m) below the gross length marked on the roll ticket shall be considered as a defect with respect to length. The unit of product for this examination shall be one roll. The sample size and acceptance number shall be as shown in Table IV.

4.4.2.3.2 Total yardage in sample. The lot shall be unacceptable if the total of the actual gross length of rolls in the sample is less than the total of the gross lengths marked on the corresponding roll tickets. The rolls examined shall be those selected for the examination of individual rolls.

4.4.3 Examination of packaging requirements. An examination shall be made in accordance with the provisions of PPP-P-1136 to determine that preservation, packing, and marking comply with section 5 requirements.

4.5 Tests. The methods of testing specified in FED-STD-191, whenever applicable, and as listed in Table VII and subsequent paragraphs, shall be followed. The physical and chemical values in section 3 apply to the results of the determinations made on the sample unit for the test purposes as specified in the applicable test method. The lot size shall be expressed in units of 1 linear yard (0.91m). The sample unit for all characteristics, except flame resistance, reflectivity, wet flexibility and adhesion after wet flexibility shall be 2 yards (1.83m) full width of the laminated cloth. The sample size shall be in accordance with Table V. For the flame resistance, reflectivity, wet flexibility, and adhesion after wet flexibility characteristics, the government will test each lot and acceptance will be based on Government results. The sample unit for these four characteristics shall be 1 yard (0.91m) full width and the sample size shall be in accordance with Table VI.

TABLE V. Sample size

Lot size	Sample size
800 or less	3
800 up to and including 22,000	5
22,001 and over	8

The lot shall be unacceptable if one or more units of product fail to meet the specified requirements.

Downloaded from http://www.everyspec.com

TABLE VI. Sample size

Lot size	Sample size
800 or less	5
801 up to and including 2,000	8
2,001 up to and including 5,000	11
5,001 up to and including 10,000	13
10,001 up to and including 22,000	15
22,001 and over	20

The lot shall be unacceptable if one or more units of product fail to meet the specified requirements.

TABLE VII. Test methods - laminated cloth

Characteristics	Requirement Paragraph	Test Method
Weight	3.3.4	5041
Tear strength (wale and course)	3.3.4	ASTM D-1424 2/
Stiffness, bending moment (wale and course)	3.3.4	5202
Identification of aluminized film	3.3.3	3/
Resistance to high temperature (blocking)	3.3.4	5872 1/
Flame resistance, vertical (wale only)	3.3.4	5903
Reflectivity after abrasion	3.3.4	4.5.1 1/
Flexibility at low temperature	3.3.4	4.5.2 1/
Wet flexibility	3.3.4	4.5.3 1/
Adhesion of aluminized film	3.3.4	4.5.4 1/
Adhesion after wet flexing	3.3.4	4.5.5 1/

1/ Failure of one specimen shall constitute failure of unit of product.
2/ The use of heavy duty instrument with higher capacity may be necessary.
3/ A certificate of compliance shall be accepted for this characteristic.

4.5.1 Reflectivity after abrasion.

4.5.1.1 Apparatus - Abrasion. The apparatus for simulating wear shall be the Wyzenbeek Abrader described in Method 5304 of FED-STD-191.

Downloaded from http://www.everyspec.com

4.5.1.2 Apparatus - Heat Reflectivity. The apparatus for conducting the heat reflectivity tests shall be in accordance with Figure 1. The heat source shall consist of a bank of five, 500 w, infrared, tubular, translucent quartz lamps having a 5 inch (12.7cm) lighted length and a mean overall length of 8-13/16 inches (22.4 cm). The lamps shall be mounted so that the lamps' surfaces are approximately 0.015 inch (0.381mm) apart. The bank or array shall be mounted and centered behind a 2-1/4 by 5-1/2 inch (5.7 by 14.0 cm) cutout on 1/2 inch (1.3 cm) transite board. A specimen holder and holder plate with a 2-1/2 by 6 inch (6.5 by 15.2 cm) center cutout shall be positioned so that the distance from the nearest lamp surface to the test specimen is exactly one inch (2.5 cm). The quartz lamp shall be heated electrically and the power input controlled by means of a variac having a capacity of at least 25 amps. A voltmeter, accurate to ± 1 volt shall be installed on the load circuit to indicate operating or load voltage to the lamps.

4.5.1.3 Apparatus - Flexing Device. A device as described in Figure 2 shall be used. This device must have a suitable weight on the weight arm to produce a 3 to 3-1/2 pound (1.36 to 1.59 kg) tension on the specimen during flexing. The tensioning jaw or clamp must be so located that, with tension jaw arm vertical, any point on the tensioning jaw would be the apex of a cone of motion generated between that point and the corresponding point of the moving jaw. The crank arms must be equal in effective length and in angular phase so that the moving jaw connecting the two arms remains parallel to the tension jaw throughout a complete revolution of the arms. The specimen is placed in the device with the moving jaw at bottom dead center, the tension jaw arm vertical, and the metallized face of the cloth down. Each jaw must clamp the specimen across the entire width. The crank handle is turned at a rate of 50 plus or minus 10 revolutions per minute of the crank arms (and moving jaw) during the test. The tray or board, flat black in color and sufficiently large to catch any particles that are removed from the fabric, is cleaned before each test and examined for metallic flakes after each test. (A motor driven apparatus may be used in lieu of the manual device specified.)

Downloaded from http://www.everyspec.com

4.5.1.4 Test procedure. The test specimen shall be approximately 3 by 10 inches (7.6 by 25.4 cm) with the long dimension in the wale direction. The test specimen shall be mounted on the oscillating drum of the abrasion apparatus. The abradant shall be No. 6 hard textured cotton duck conforming to type I of CCC-C-419 and shall be cut into strips 1-7/8 inches (4.7 cm) wide by 9 inches (22.9 cm) long with the long dimension in the wale direction. The abradant shall be mounted in the specimen holding clamps under a tension of 3 pounds (1.36 kg) and a head load of 3 pounds (1.36 kg). A new abradant shall be used for each test and the contact area of the abradant shall be free of slubs, knots, etc. The test sample shall be subjected to 300 abrasion cycles. Before positioning specimen holder in front of the heat source, apply current to the lamps and adjust variac to obtain an 87V operating voltage as indicated by the voltmeter and an average temperature of the array of 2730°F ± 10°F (1499°C ± 5.6°C). The individual lamps shall not vary more than ± 25°F (13.9°C) from the average temperature. Adjustments may be made to the variac setting to obtain the specified lamp temperature. Once the initial setting has been made to the array of five new quartz lamps the operating voltage shall be recorded and permanently retained for test purposes. After obtaining temperature and voltage for new lamps, all future testing shall be performed by adjusting the variac to recorded operating voltage for new lamps. Further adjustments may be made to the voltage setting to obtain the specified new lamp temperature up to a maximum increase of 5 volts from the initially recorded voltage. Above a 5 volt increase the lamps must be changed. The individual lamp temperature shall be determined by a properly scaled optical type pyrometer. The temperature indications shall be taken along the center line of the individual lamps, not between the lamps. After the temperature has been set the variac setting shall be undisturbed and current to the lamp shall be shut off. The abraded specimen shall then be placed in the specimen holder so that the abraded area will be centered in the opening of the specimen holder. A sample of white blotting paper, approximately 4 by 8 inches (10.2 by 20.3 cm) in dimension and conforming to requirements detailed in Method 5500 of FED-STD-191 shall be placed behind the test specimen. The specimen holder containing the test specimen and the blotting paper shall be positioned in front of the heat source so that the distance from the specimen to the nearest edges of the lamp surface is exactly one inch. A hand operated shutter device shall be placed between the specimen holder containing the test specimen and the lamps to completely block the heat from reaching the specimen when the lamps are first turned on. The shutter device could be a thin masonite board covered with highly reflective aluminum foil or could be any other shielding device that will effectively keep the heat from the lamps from reaching the test specimen prior to start of test. The lamps are then turned on for a 60 second warm-up period. With the lamps still turned on, the shutter is removed from in front of the test specimen and the specimen exposed to the heat for 25 seconds and then the current shut off. The specimen holder shall be removed from the apparatus and the white blotting paper shall be examined for evidence of discoloration. The cooled specimens shall then be mounted in the flexing device and shall be flexed for 20 cycles.

Downloaded from http://www.everyspec.com

4.5.1.5 Report. Any visual evidence of discoloration of the blotting paper shall constitute failure of the specimen. Any evidence of flaking of the aluminized film during the postflex shall also constitute failure of the specimen. Five specimens shall be tested from each unit of production. Failure to any one specimen shall constitute failure of the unit of product.

4.5.2 Flexibility at low temperature. Five specimens, 1 by 4 inches (2.5 by 10.2 cm) with the long dimension in the wale direction and aluminized face away from the rod, shall be placed in the open test jigs (see Figure 3). The specimens in open jigs shall be conditioned for 4 hours at a temperature of -20°F (-28.9°C). At the end of the conditioning period, with the jigs and specimens still in the test atmosphere, the jigs shall be rapidly closed so that the specimens are bent face out around the 1/8 inch (0.3 cm) diameter rod with the back of each specimen touching itself over its full width at least 3/16 inch (0.5 cm) from the axis of the rod. The breaking, shattering, or cracking of the aluminized film of a single specimen shall constitute failure in this test. The tested fabric shall be visually examined without magnification.

4.5.3 Wet flexing. Test specimens shall be 4 inches (10.2 cm) wide by 8 inches (20.3 cm) long with the long dimension parallel to the wale direction. The test specimen shall be immersed in water at 140°F ± 5°F (60°C ± 2.8°C) for fifteen (15) minutes. Upon removal from the water it shall be placed on two (2) layers of absorbent type blotters (same as specified in 4.5.1.4) and covered by two (2) additional layers. After placing the wet specimen between the blotters a ten (10) pound (4.5 kg) weight, steel rod 3 inches (7.6 cm) in diameter and 5 inches (12.7 cm) long, shall be rolled over the test specimen for four (4) complete cycles (eight passes). The specimen is then removed from between the blotters and placed in the flexing device (as described in Figure 2), with the wale direction perpendicular to the jaw line. The distance between jaw lines shall be 5 1/4 inches (13.3 cm). The specimen shall be flexed for 1000 cycles and then removed from the apparatus and visually inspected for delamination. The test specimens shall be reported "failed" if delamination or cracking occurs further than 7/8 inch (2.2 cm) from either jaw line. Five (5) specimens from each sample unit shall be tested with no two specimens containing the same yarns. Failure of any one specimen shall constitute failure of sample unit.

4.5.4 Adhesion of aluminum lamination (tape method).

4.5.4.1 Preparation for test. The pressure sensitive tape used for testing the adhesion of the aluminized film shall have an adhesion value of not less than 2.75 pounds per inch (1.150 N/cm) width or more than 3.50 pounds per inch (0.191 N/cm) width. Five 1 by 8 inch (2.5 by 20.3 cm) specimens of the tape shall be tested using:

(a) A tensile testing machine as described in FED-STD-191, Method 5100 (except that all machine attachments for determining maximum load shall be disengaged and speed of the pulling clamp shall be 20 inches (50.8 cm) per minute).

Downloaded from http://www.everyspec.com

(b) Five 2 by 4 inch (5.1 by 10.2 cm) steel plates conforming to class 301 of QQ-S-766 which have been polished to a No. 4 finish.

(c) A 1-1/2 inch (3.8 cm) wide steel roller weighing 10 pounds ± 2 ounces (4.53 kg ± 0.06 kg).

Before each test, the steel plates shall be thoroughly cleaned with diacetone alcohol, methyl alcohol, or methyl ethyl ketone, using a clean piece of lintless wiping tissue. The tape shall be applied to the clean surface of the plate so that it covers the entire length of the plate and extends 4 inches (10.2 cm) beyond one end of the plate. The tape shall be pressed down by passing the roller over it six times, three times in each direction. The free end of the tape shall be doubled back and 1 inch (2.5 cm) of the tape peeled off the plate. The plate shall be inserted and clamped in the bottom jaw of the tensile testing machine with the free end of the tape downward. The free end of the tape shall be looped upward and inserted and clamped in the upper jaw so as to peel the tape from the plate when the jaw motion is started. The minimum tension required to remove the remainder of the tape, except for the final 1 inch (2.5 cm), shall be the adhesion value and shall be determined by means of the autographic recording device.

4.5.4.2 Test procedure. Five 1 by 8 inch (2.5 by 20.3 cm) specimens of similar tape, taken from a lot of material which has passed the test as specified above shall be used for testing the adhesion of the aluminized film to the adhesive coating and/or base cloth. The apparatus and procedure shall be as specified above, except that instead of the steel plates, five 2 by 4 inch (5.1 by 10.2 cm) specimens of the finished cloth shall be used. Two "X" and three horizontal cuts shall be made with a sharp razor blade through the aluminum and adhesive layers, but not through the base cloth, as shown in Figure 4. The tape shall be applied so that the long dimension of the tape is superimposed on the axis of the "X" and horizontal cuts. The specimens need not be cleaned prior to the test and shall not contain any imperfections.

4.5.4.3 Report. Evidence of separation of the aluminized film from the adhesive coating and/or base cloth shall constitute failure of the unit of product represented. A moderate amount of aluminum specks on the tape shall not constitute failure; however, exposure of the adhesive beneath the vacuum deposited alumimum does constitute failure. Five specimens shall be tested from each unit of product. The failure of one specimen shall constitute failure of unit of product represented.

4.5.5. Adhesion after wet flexing. Immediately after each of the five (5) specimens has completed the wet flex test in 4.5.3 it shall be tested and evaluated for adhesion in accordance with the procedure in 4.5.4, except that the razor cut design shall be symmetrically centered within the 4 by 8 inch (10.2 by 20.3 cm) specimen.

Downloaded from http://www.everyspec.com

5. PACKAGING

5.1 Packaging. Put-up and presevation packaging shall be level A or Commercial as specified (see 6.2).

5.1.1 Levels A and Commercial. The laminated cloth shall be put-up and packaged in accordance with the applicable requirements of PPP-P-1136, except that the material shall be rolled with the aluminized side facing outward.

5.2 Packing. Packing shall be level A, B or Commercial as specified (see 6.2).

5.2.1 Levels A, B and Commercial. The laminated cloth shall be packed in accordance with the applicable requirements of PPP-P-1136.

5.3 Marking. In addition to any special marking required by the contract or order, interior packages and shipping containers shall be marked in accordance with PPP-P-1136.

5.3.1 Non-asbestos marking. Each exterior container for the cloth shall be clearly marked with bold letters at least 1/2 inch (1.3cm) in height with the words "NON-ASBESTOS".

6. NOTES

6.1 Intended use. The cloth covered by this specification is intended for use in the manufacture of protective clothing for firefighters and other heat protective, proximity garments.

6.2 Ordering data. Procurement documents should specify the following:

a. Title, number and date of this specification.
b. When a first article is required (see 3.2 and 4.3). The item will be tested and should be a first article sample. The contracting officer should include specific instruction in acquisition documents regarding arrangements for examinations, qualtity, and testing and approval of the first article.
c. Width required (see 3.4).
d. Length required if other than specified (see 3.5).
e. Levels of packaging and packing (see 5.1 and 5.2).

6.3 Standard sample. For access to standard sample, address the procuring office issuing the invitation for bids (see 3.1).

6.4 Fiber type. The fiber requirements of this document can be met with "Kevlar 29" manufactured by E.I. duPont DeNemour Company, Wilmington, DE and "PBI" manufactured by Hoechst Celanese Corporation, Charlotte, NC.

6.5 Testing devices. Testing devices outlined in Figures 1, 2, and 3 are not manufactured commercially.

Downloaded from http://www.everyspec.com

6.6 Subject term (key word) listing:
a. Cloth, aluminized
b. Cloth, flame resistant
c. Cloth, knit
d. Cloth, para-aramid/PBI

Custodian:
Navy - NU
Army - GL
Air Force - 99

Review Activities:
Navy - MC
Army - MD
Air Force - 50, 82

User Activities:
Navy - CG
Air Force - 45

Preparing Activity:
Navy - NU

Project No. 8305-0211

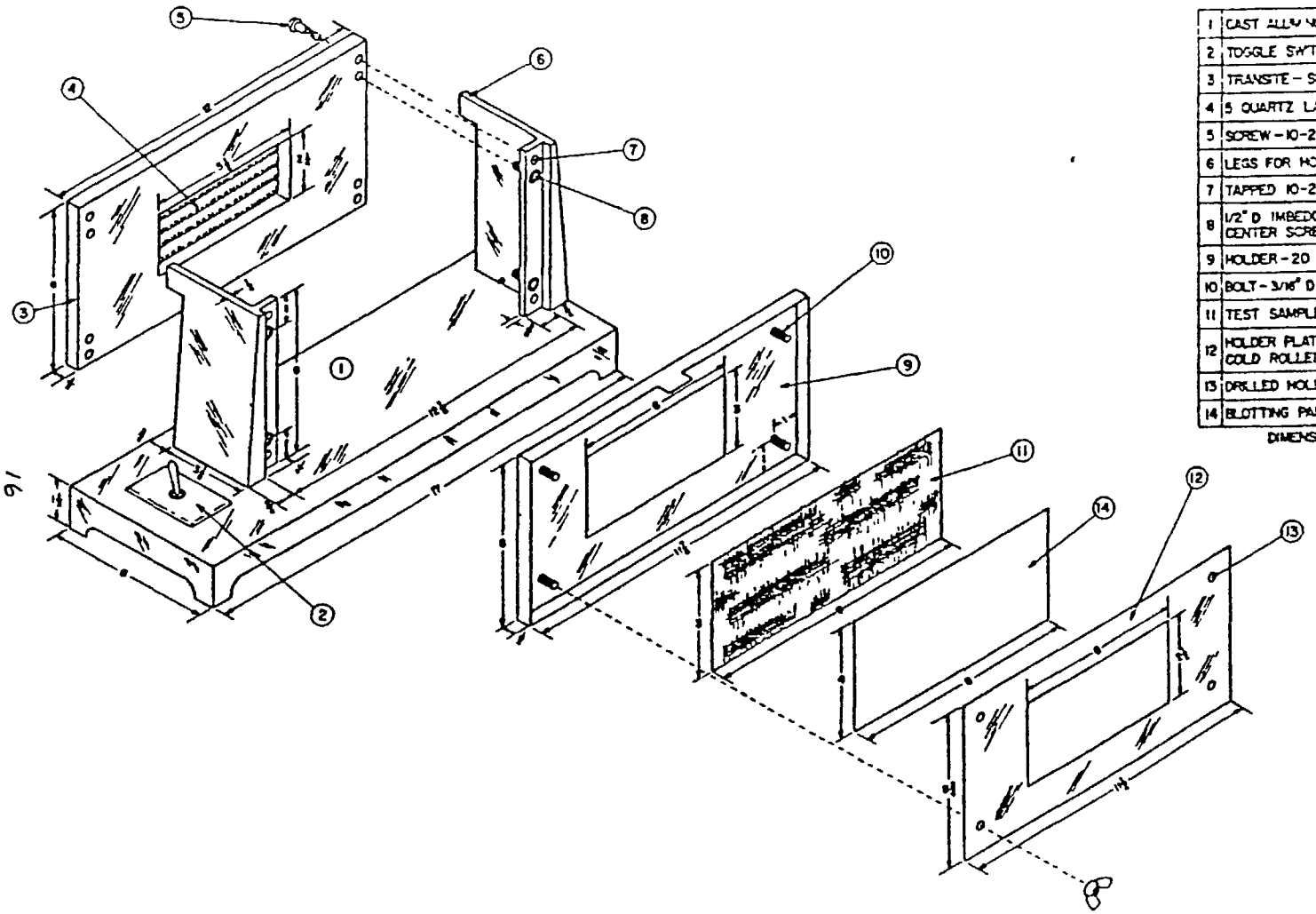

1	CAST ALUMINUM APPARATUS BODY
2	TOGGLE SWITCH - DPST
3	TRANSITE - SMOOTH SURFACES
4	5 QUARTZ LAMPS - 500T3 115-125V
5	SCREW - 10-24 3/4"
6	LEGS FOR HORIZONTAL TEST POSITION
7	TAPPED 10-24
8	1/2" D IMBEDDED MAGNET CENTER SCREW FASTENING
9	HOLDER - 20 GAGE COLD ROLLED STEEL
10	BOLT - 3/16" D 1/2" BRAZED FLUSH
11	TEST SAMPLE
12	HOLDER PLATE - 20 GAGE COLD ROLLED STEEL
13	DRILLED HOLES - 3/8" D
14	BLOTTING PAPER

DIMENSIONS IN INCHES

EXPLODED VIEW OF HEAT REFLECTIVITY TEST APPARATUS

FIGURE 1

Downloaded from http://www.everyspec.com

Downloaded from http://www.everyspec.com

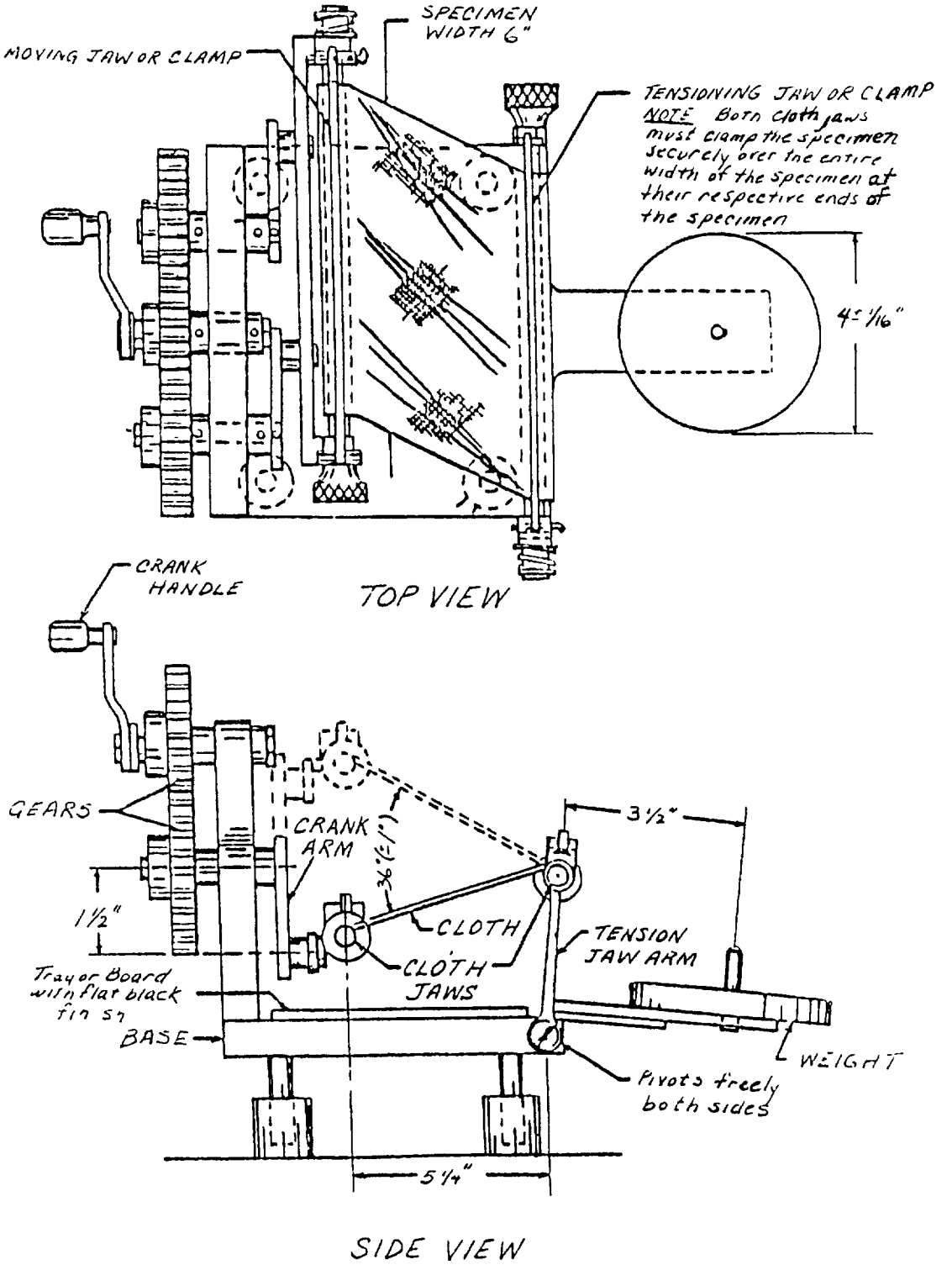

FIGURE 2 - Flexing Device

Downloaded from http://www.everyspec.com

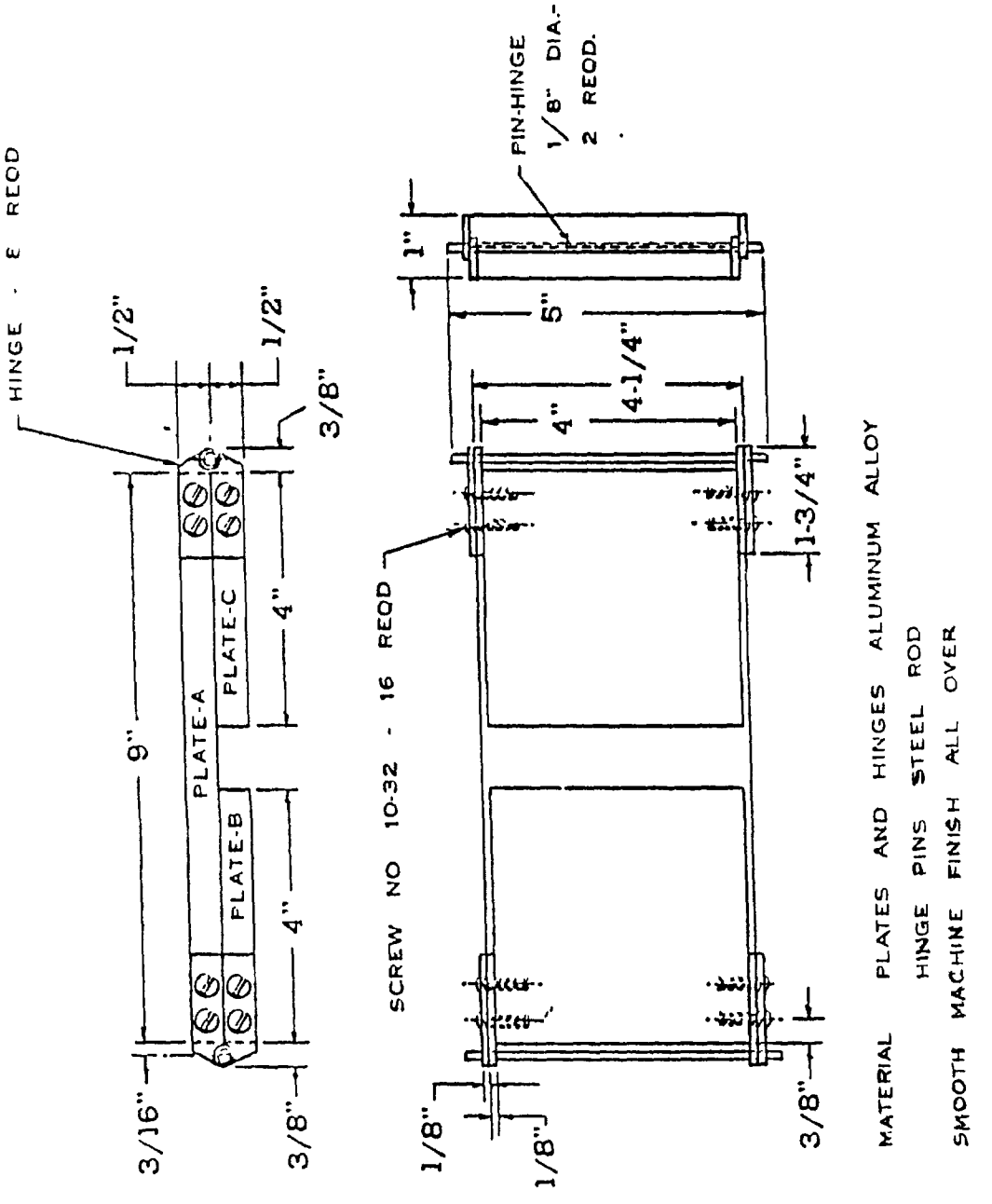

JIG ASSEMBLY–RESISTANCE TO LOW TEMPERATURE TEST

Figure 3

Downloaded from http://www.everyspec.com

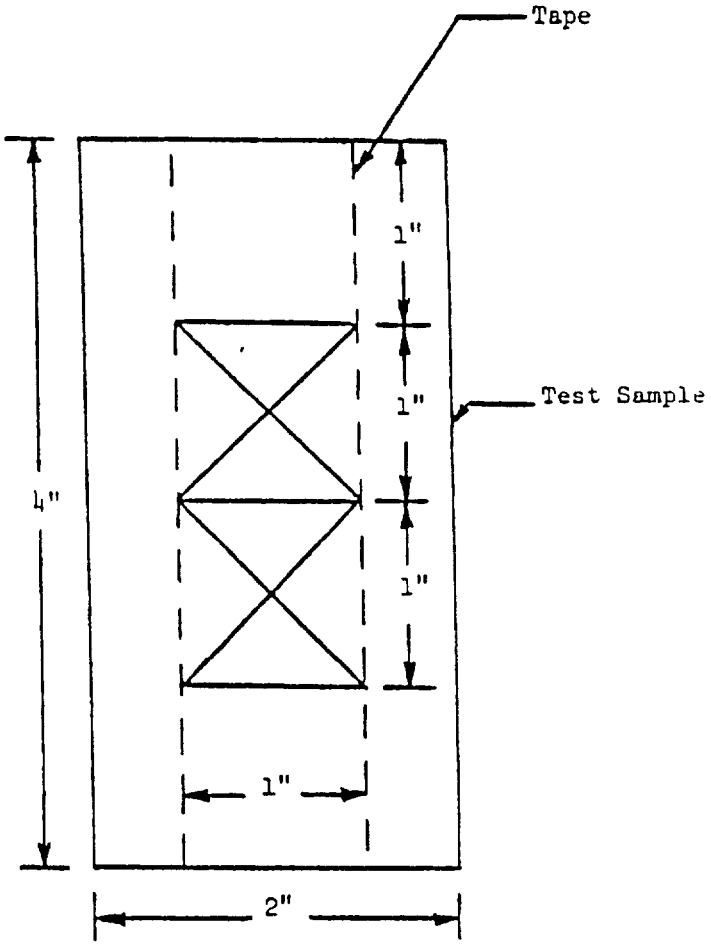

Figure 4 - Showing "x" and horizontal cuts for adhesion of coating test

NOTE: Solid lines indicate cut lines

Downloaded from http://www.everyspec.com

STANDARDIZATION DOCUMENT IMPROVEMENT PROPOSAL

(See Instructions – Reverse Side)

1. DOCUMENT NUMBER	2. DOCUMENT TITLE
MIL-C-24941	Cloth, Laminated, Aluminized (Para-Aramid/PBI Base)

3a. NAME OF SUBMITTING ORGANIZATION	4. TYPE OF ORGANIZATION *(Mark one)*
	☐ VENDOR
	☐ USER
b. ADDRESS *(Street, City, State, ZIP Code)*	☐ MANUFACTURER
	☐ OTHER *(Specify)*. _____

5. PROBLEM AREAS

a. Paragraph Number and Wording

b. Recommended Wording

c. Reason/Rationale for Recommendation

6. REMARKS

7a. NAME OF SUBMITTER *(Last, First, MI)* – Optional	b. WORK TELEPHONE NUMBER *(Include Area Code)* – Optional
c. MAILING ADDRESS *(Street, City, State, ZIP Code)* – Optional	8. DATE OF SUBMISSION *(YYMMDD)*

Downloaded from http://www.everyspec.com

INSTRUCTIONS: In a continuing effort to make our standardization documents better, the DoD provides this form for use in submitting comments and suggestions for improvements. All users of military standardization documents are invited to provide suggestions. This form may be detached, folded along the lines indicated, taped along the loose edge *(DO NOT STAPLE)*, an mailed. In block 5, be as specific as possible about particular problem areas such as wording which required interpretation, was too rigid, restrictive, loose, ambiguous, or was incompatible, and give proposed wording changes which would alleviate the problems. Enter in block 6 any remarks not related to a specific paragraph of the document. If block 7 is filled out, an acknowledgement will be mailed to you within 30 days to let you know that your comments were received and are being considered.

NOTE: This form may not be used to request copies of documents, nor to request waivers, deviations, or clarification of specification requirements on current contracts. Comments submitted on this form do not constitute or imply authorization to waive any portion of the referenced document*(s)* or to amend contractual requirements.

(Fold along this line)

(Fold along this line)

DEPARTMENT OF THE NAVY

NO POSTAGE NECESSARY IF MAILED IN THE UNITED STATES

OFFICIAL BUSINESS
PENALTY FOR PRIVATE USE $300

BUSINESS REPLY MAIL
FIRST CLASS PERMIT NO. 12503 WASHINGTON D C

POSTAGE WILL BE PAID BY THE DEPARTMENT OF THE NAVY

Officer in Charge
Navy Clothing and Textile Research Facility
Code 50
21 Strathmore Road
Natick, MA 01760