Downloaded from http://www.everyspec.com

MIL-C-24368/2B(NAVY)
25 March 1987
SUPERSEDING
MIL-C-24368/2A(NAVY)
1 March 1972
MIL-C-24368/3A(NAVY)
1 March 1972

MILITARY SPECIFICATION SHEET

CONNECTOR ASSEMBLIES; RECEPTACLE, AND RECEPTACLE - CABLED, POWER TRANSFER, SHORE TO SHIP AND SHIP TO SHIP, 500 VOLTS, 500 AMPERES, 60 HERTZ, SYMBOL NUMBER 1161

This specification is approved for use within the Naval Sea Systems Command, Department of the Navy, and is available for use by all Departments and Agencies of the Department of Defense.

The requirements for acquiring the receptacles described herein shall consist of this specification and the latest issue of MIL-C-24368(NAVY).

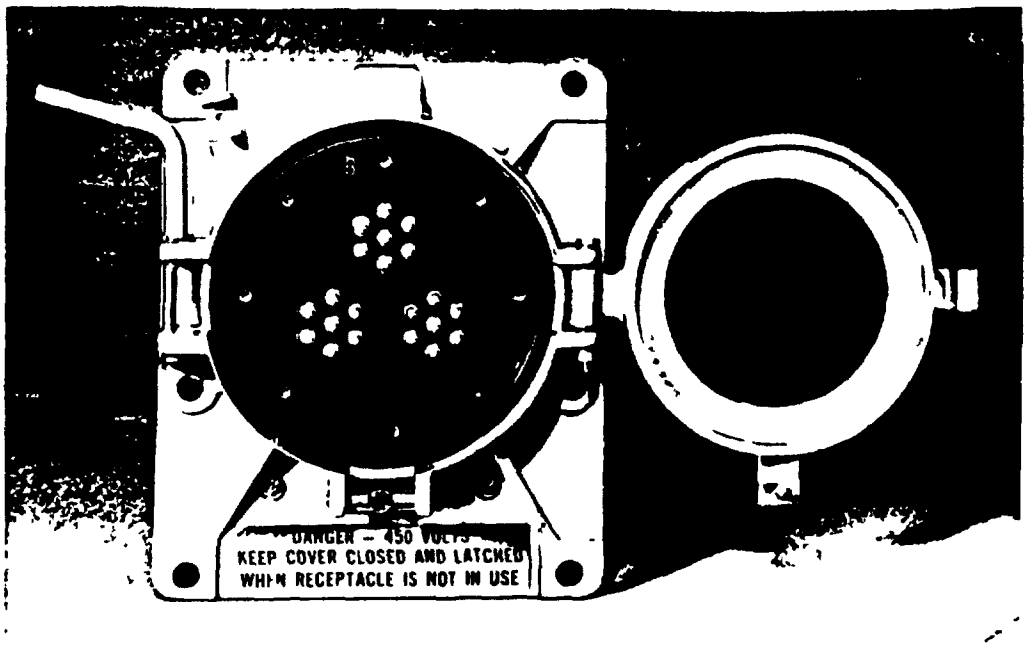

SH 132316859

FIGURE 1. Power transfer receptacle, typical.

All dimensions in inches.
For tolerances other than specified, see dimensions and tolerances of MIL-C-24368.

AMSC N/A FSC 5935

DISTRIBUTION STATEMENT A Approved for public release; distribution unlimited

Downloaded from http://www.everyspec.com

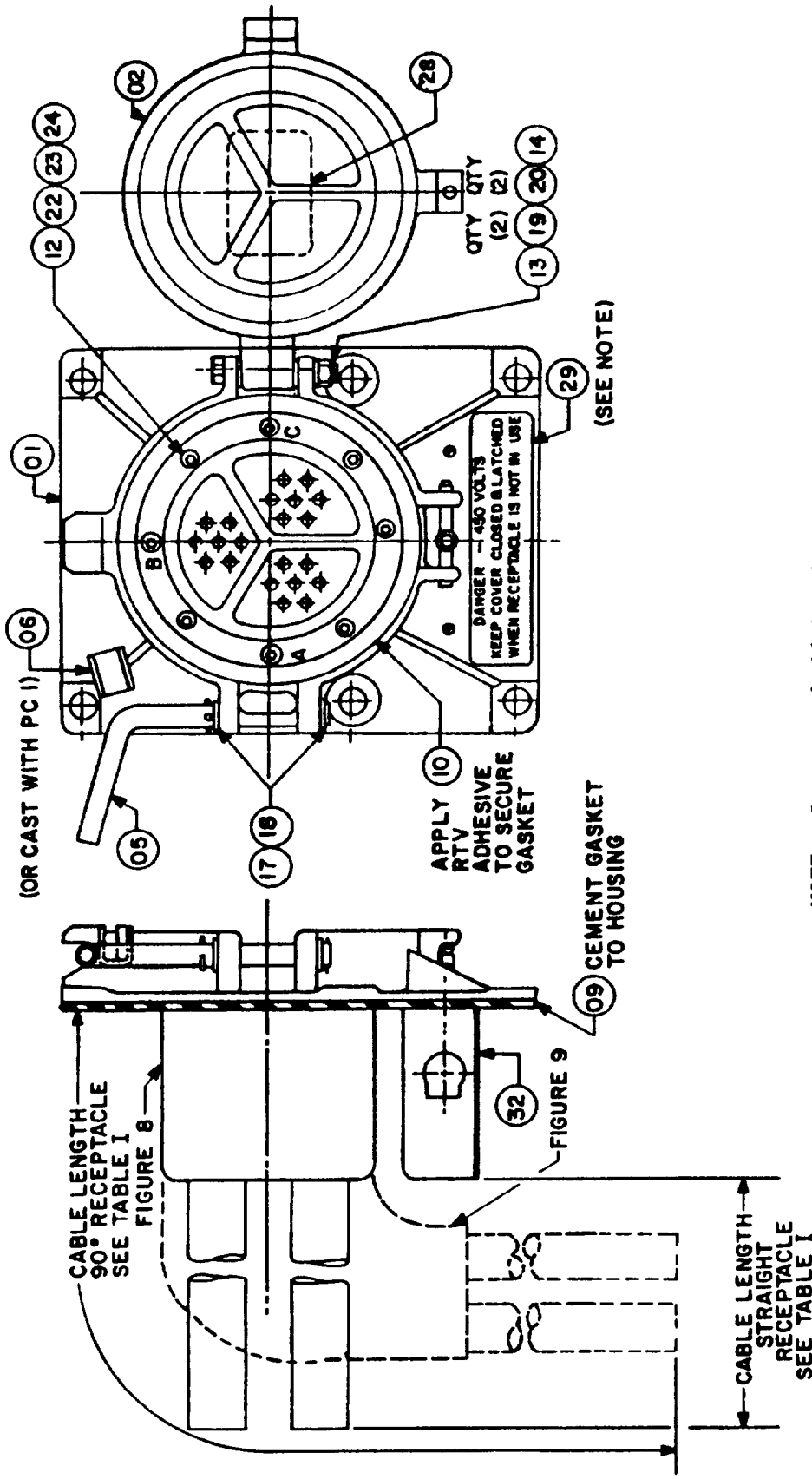

NOTE: Letters shall be white on red background. Voltage numbers shall be black on white background.

FIGURE 2. Receptacle, typical.

SH 132316860

Downloaded from http://www.everyspec.com

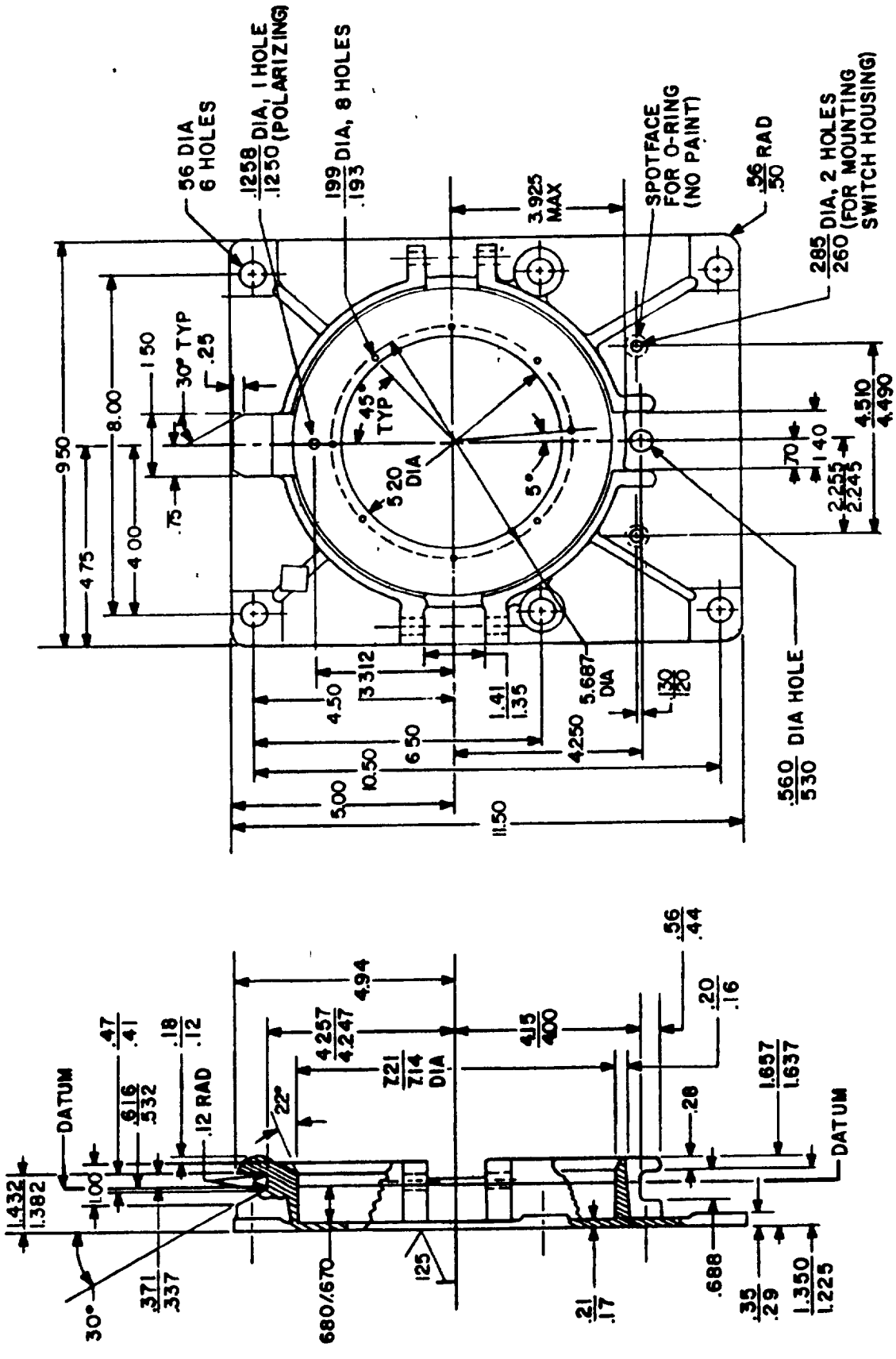

NOTE: Housing shall be cast as shown.

SH 132316861

FIGURE 3. Receptacle housing. (01)

Downloaded from http://www.everyspec.com

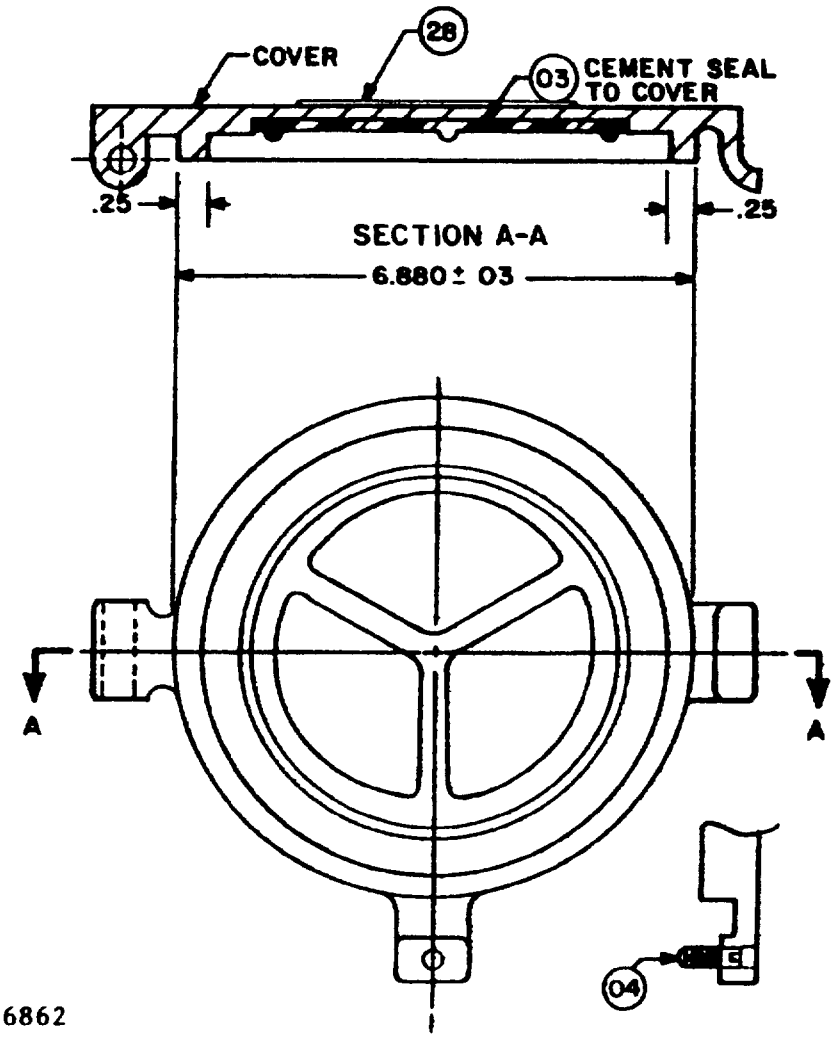

SH 132316862

FIGURE 4. Cover assembly. (02)

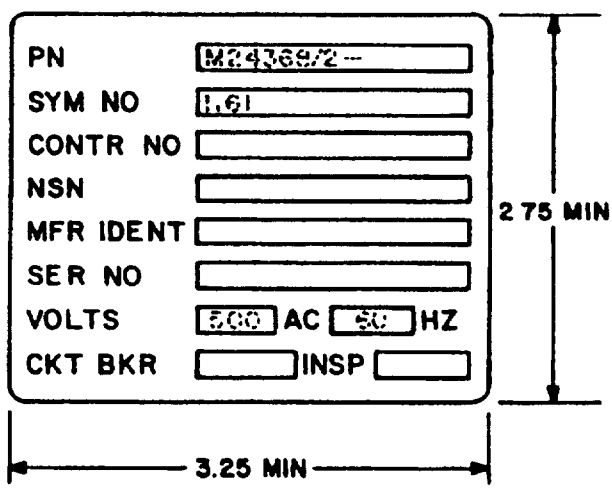

SH 132316863

FIGURE 5. Identification plate. (28)

Downloaded from http://www.everyspec.com

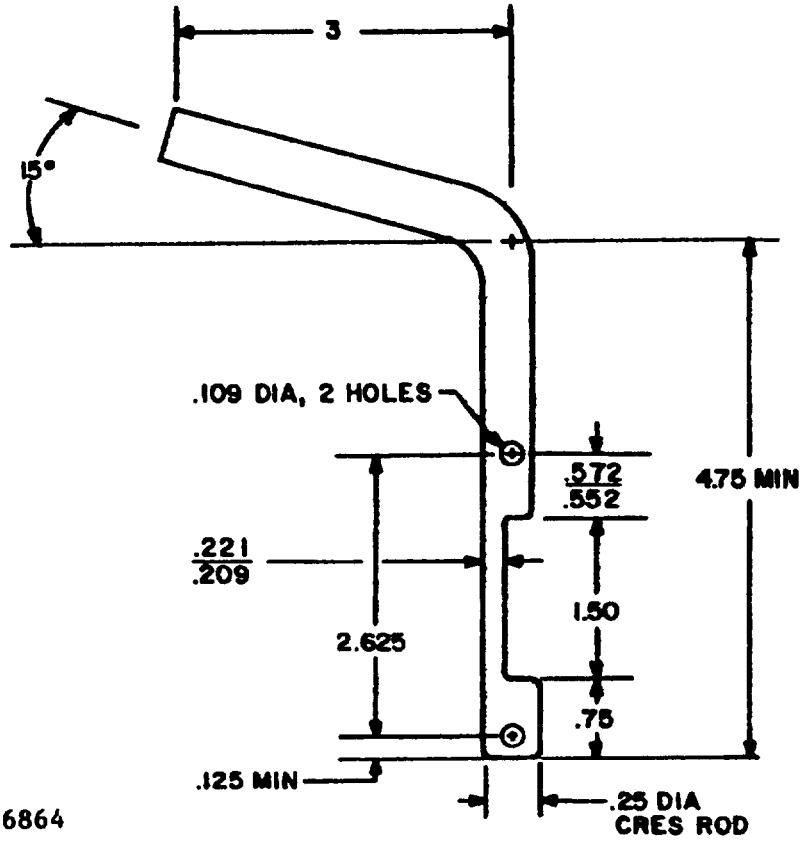

SH 132316864

FIGURE 6. Latch. (05)

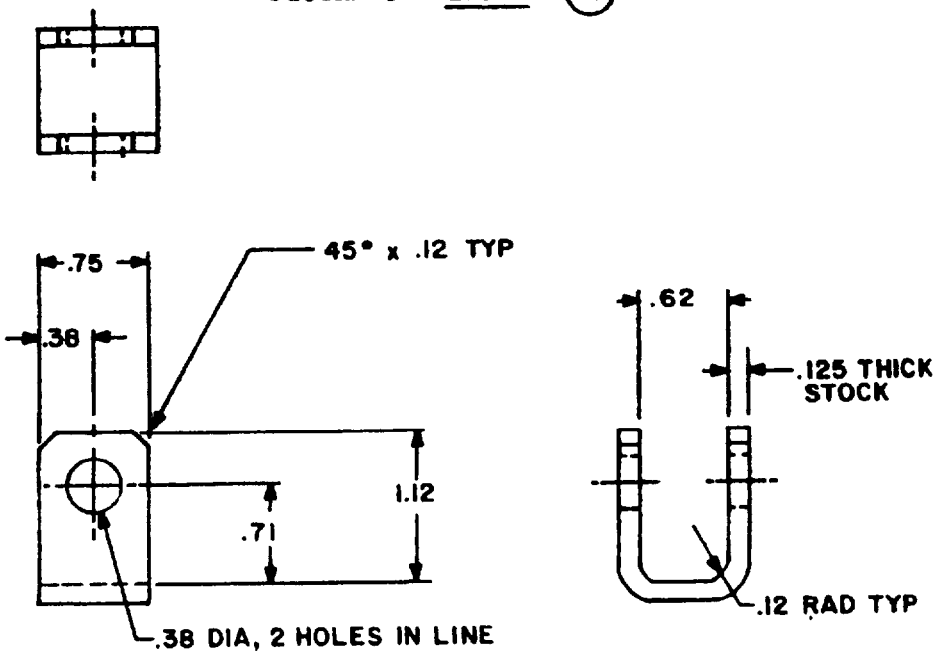

NOTE: Bracket may be cast with receptacle housing at manufacturer's option.

SH 132316865

FIGURE 7. Latch locking bracket. (06)

Downloaded from http://www.everyspec.com

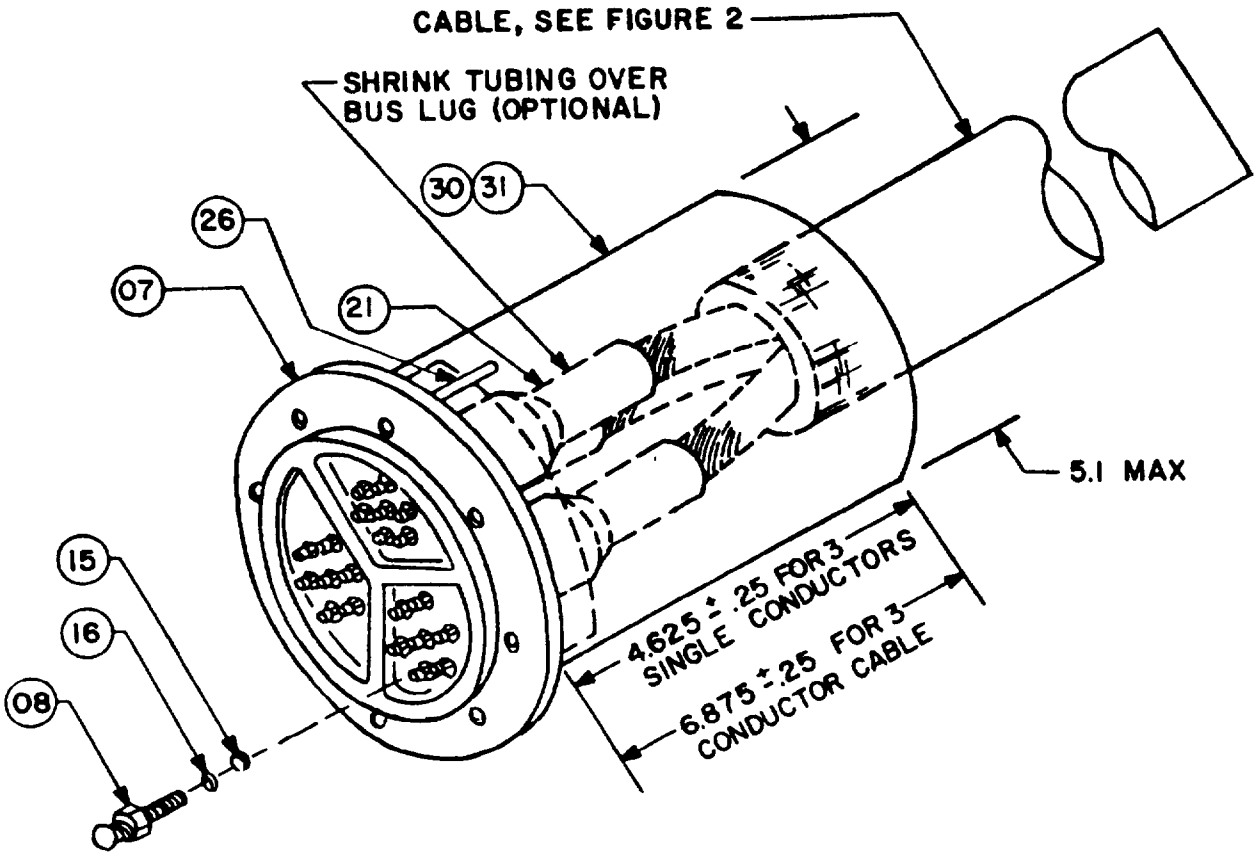

Cable termination and potting procedures shall be in accordance with Drawing 803-5001027.

SH 132316866

FIGURE 8. Plug insert and cable assembly for straight receptacle, typical.

Downloaded from http://www.everyspec.com

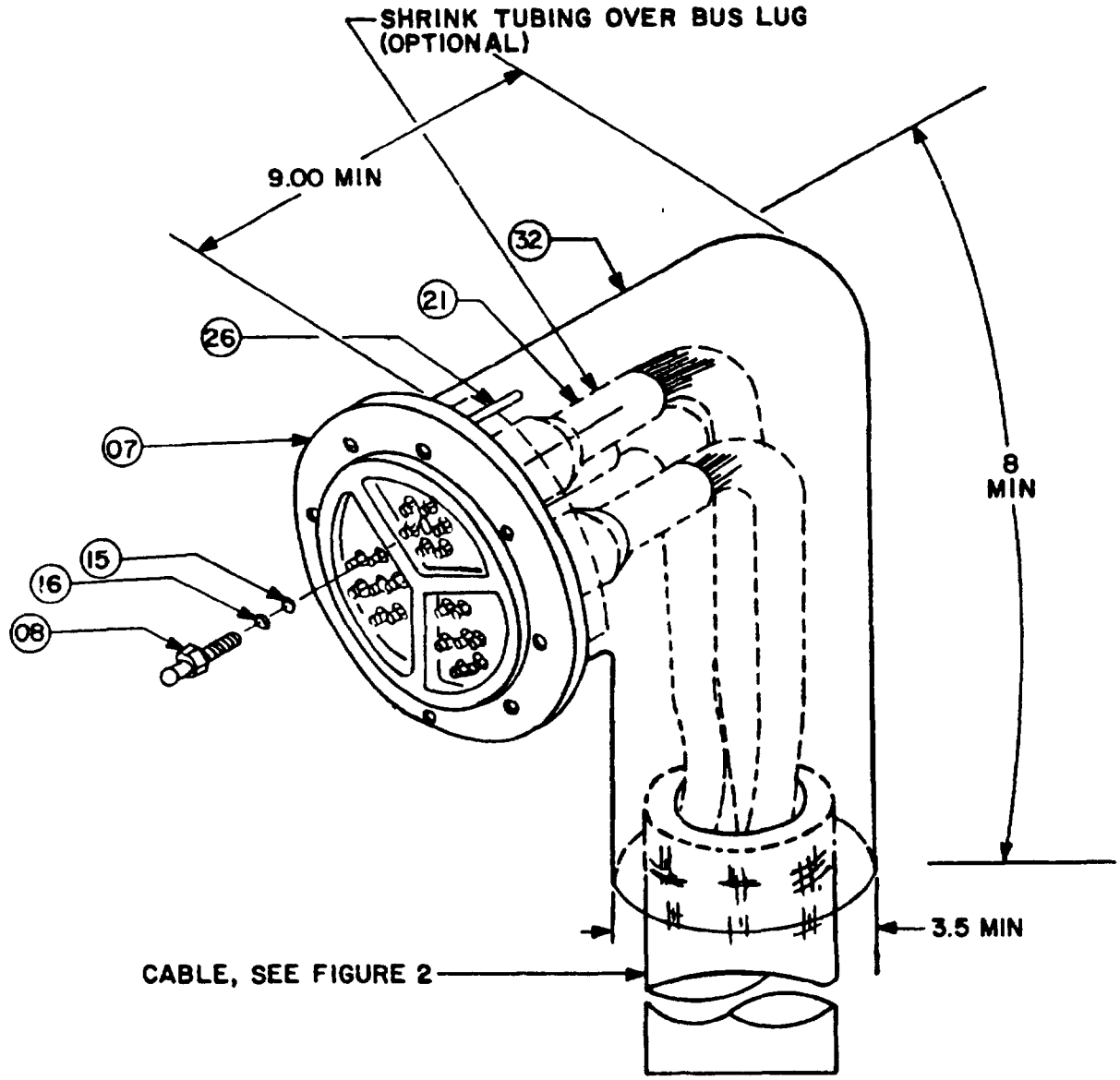

Cable termination and potting procedures shall be in accordance with Drawing 803-5001027 or as shown above.

SH 132316867

FIGURE 9. Plug insert and cable assembly for 90-degree receptacle, typical.

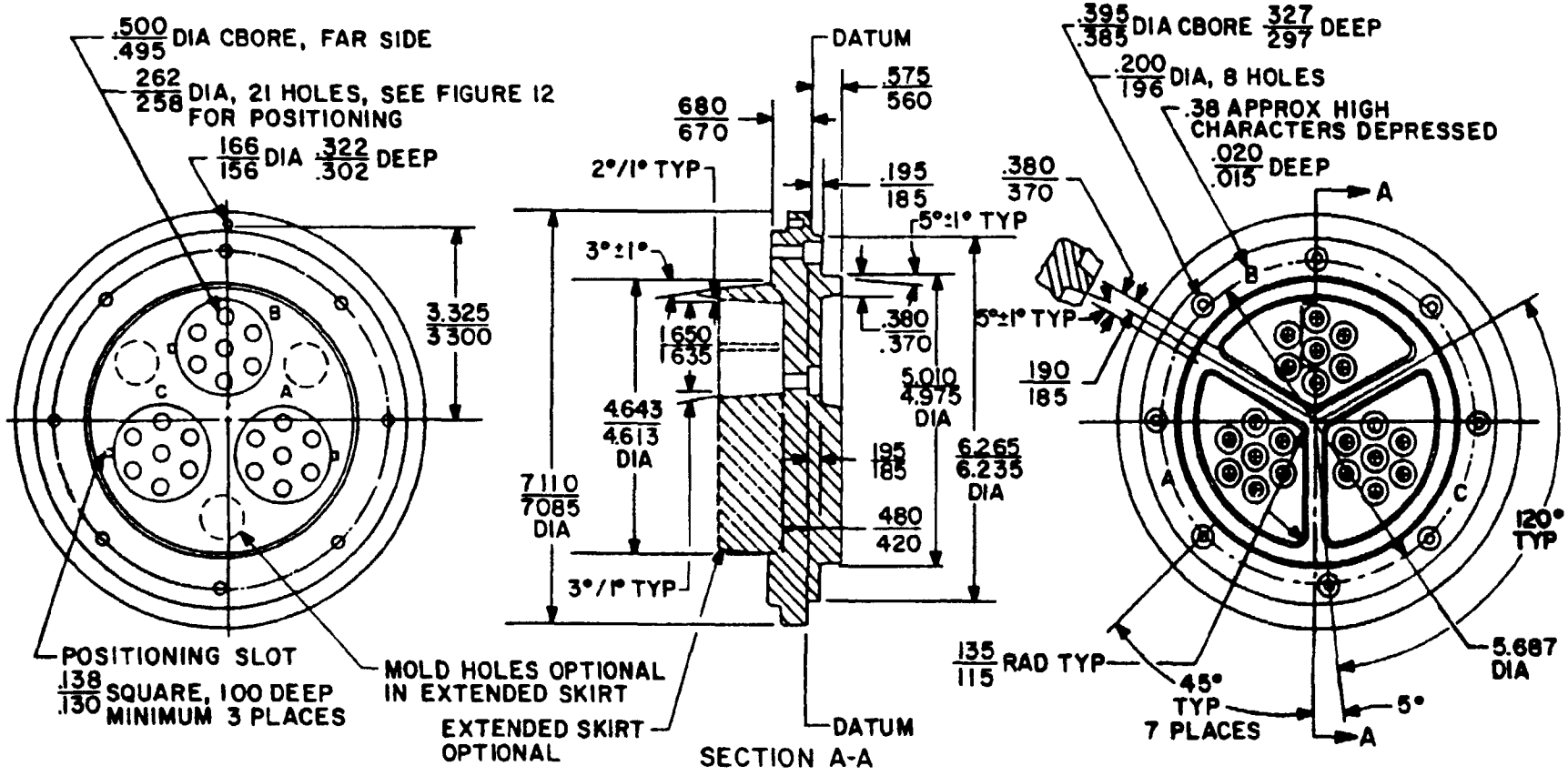

1. Areas in contact with the potting compound (see figures 8 and 9) and seal (figure 15) shall be sand blasted using 100 garnet. Maximum removal of material 0.001.
2. Apply enamel, coml grade, to phase letters: A-Black (none), B-White, C-Red.

SH 132316868

FIGURE 10. Insert, receptacle.

Downloaded from http://www.everyspec.com

Downloaded from http://www.everyspec.com

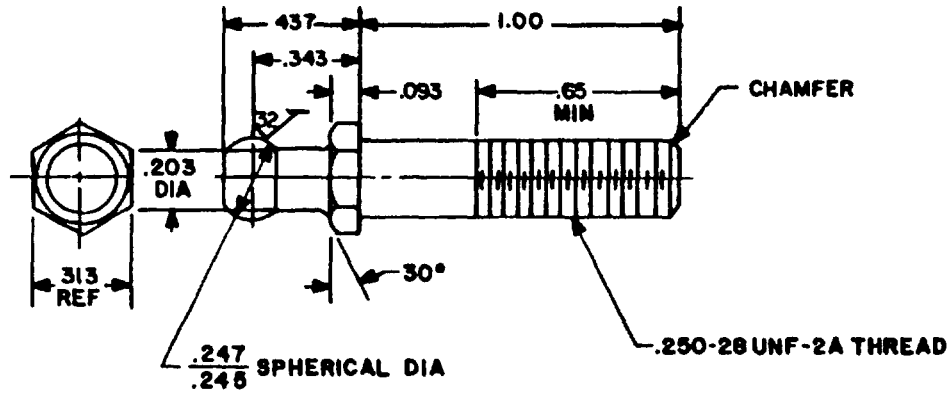

1. All fillets corner radii 0.005 maximum.
2. Finish shall be 63 on all machined surfaces except as shown.

SH 132316869

FIGURE 11. Pin, contact. (08)

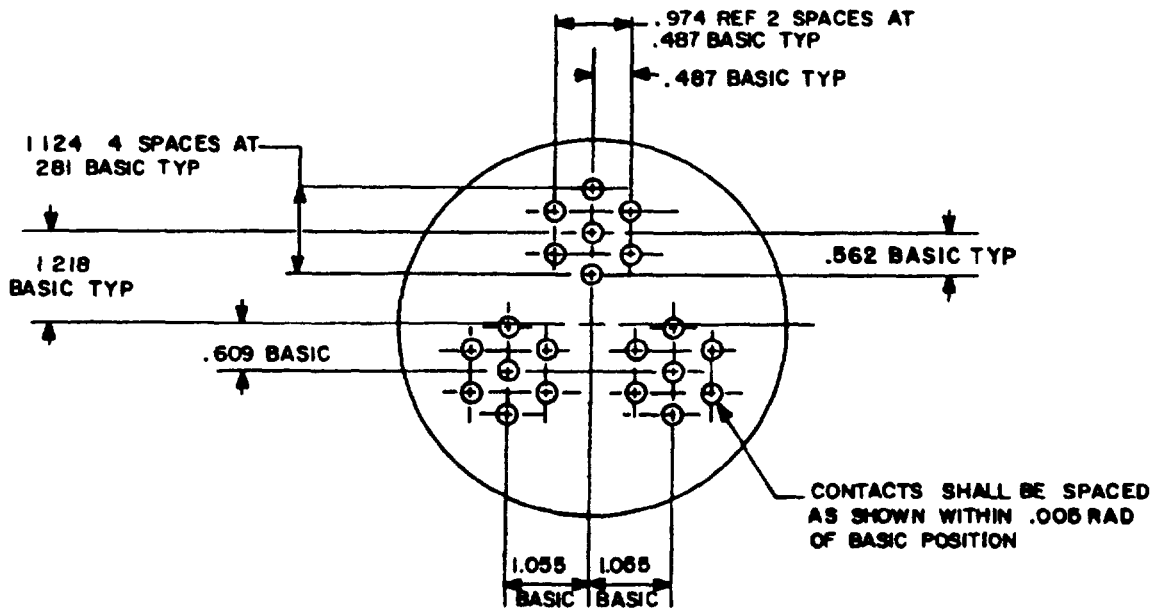

SH 132316870

FIGURE 12. Positioning of contact centers.

Downloaded from http://www.everyspec.com

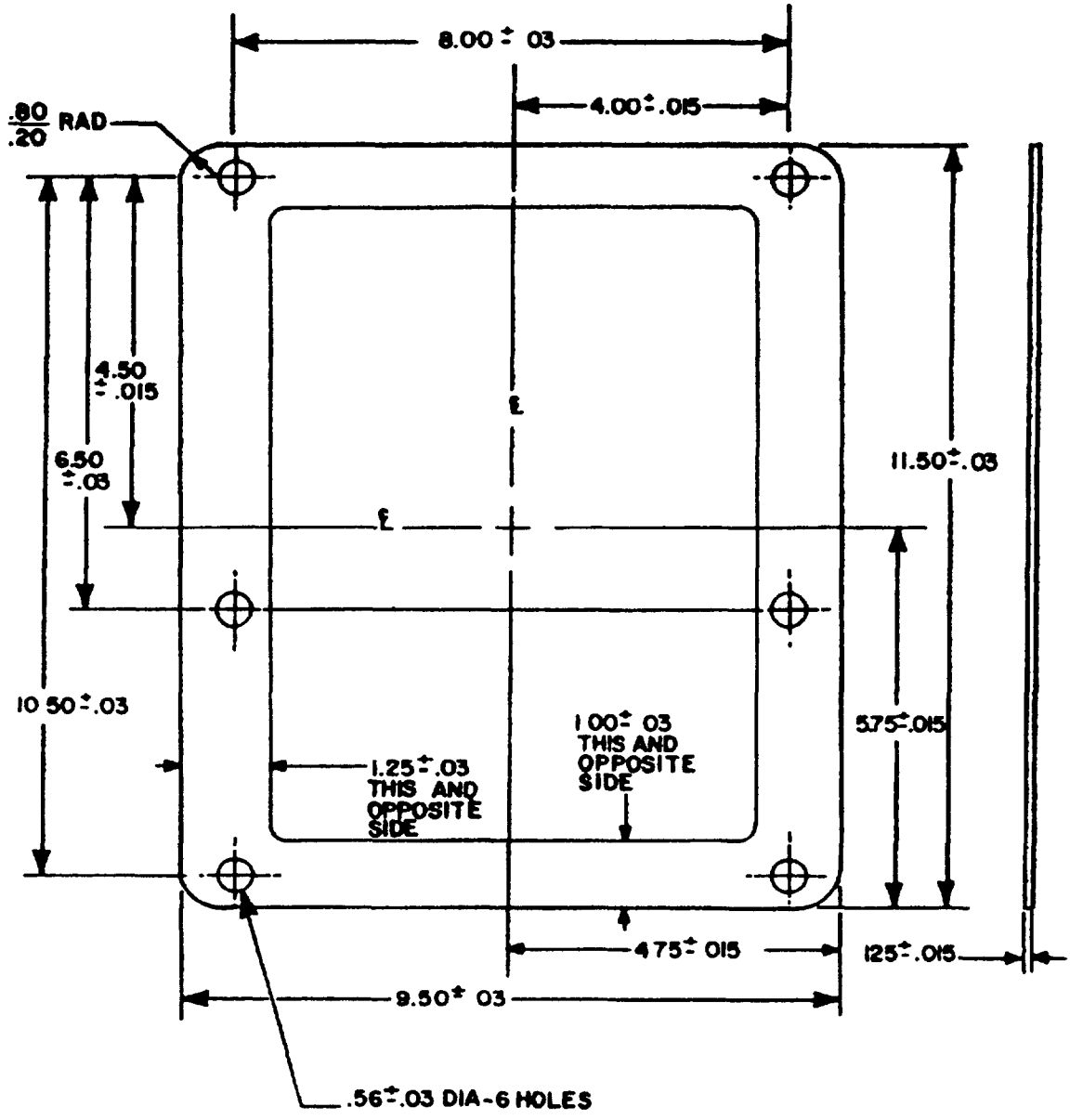

SH 132316871

FIGURE 13. Gasket, receptacle. (09)

Downloaded from http://www.everyspec.com

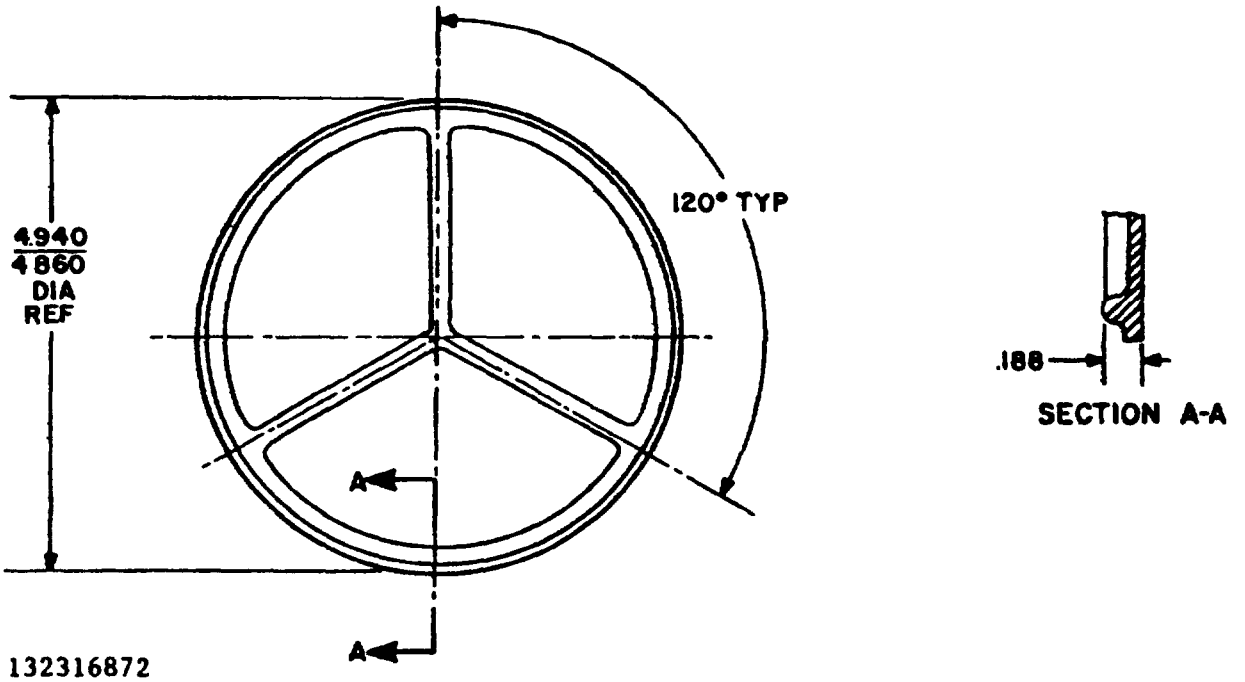

SH 132316872

FIGURE 14. Seal, cover. (03)

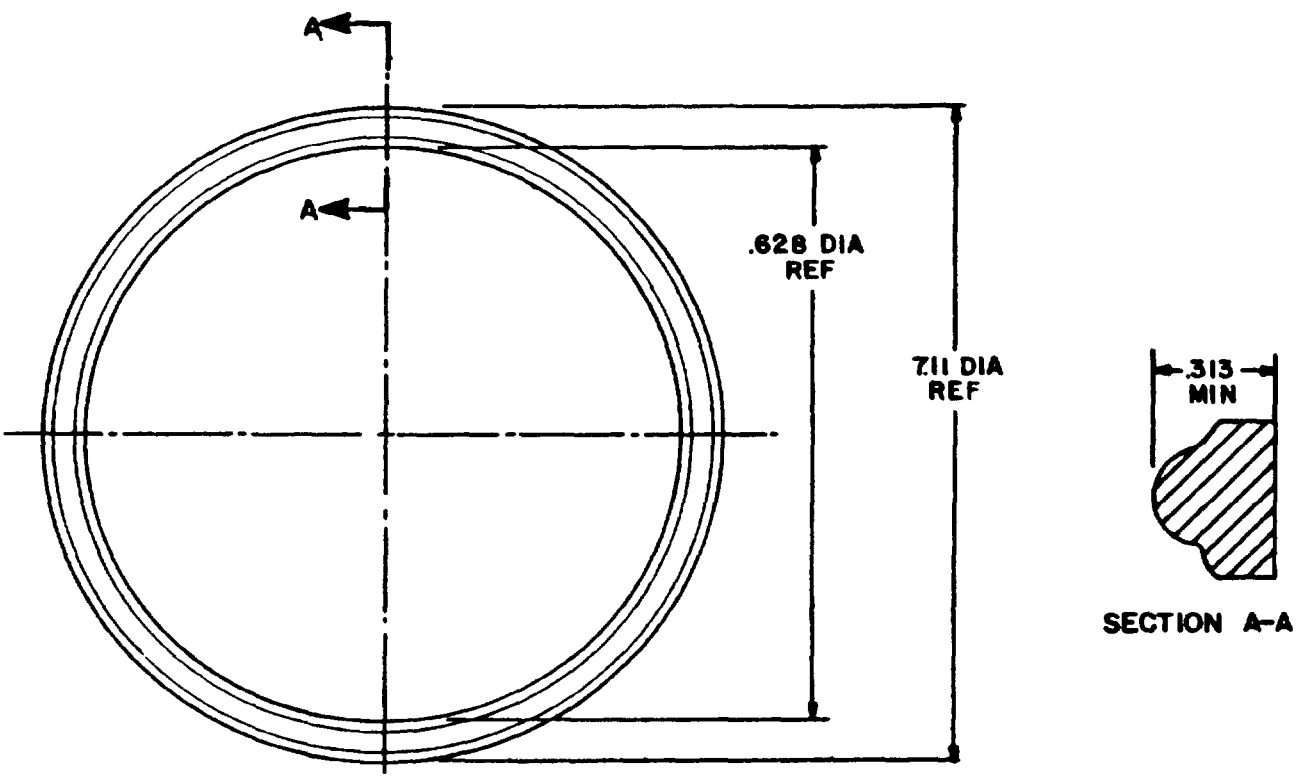

SH 132316873

FIGURE 15. Seal, receptacle. (10)

Downloaded from http://www.everyspec.com

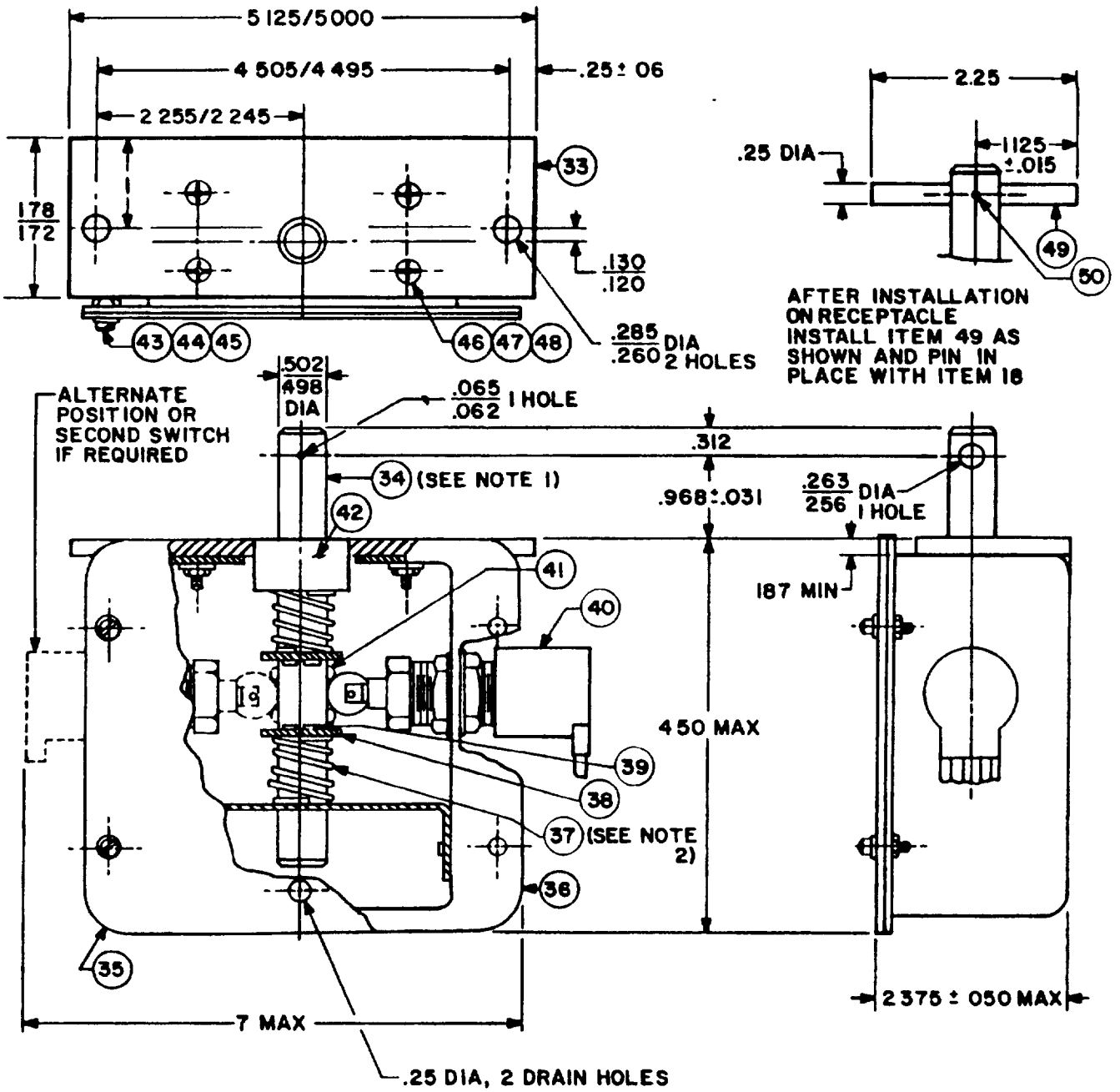

NOTE: 1. Finish of surface in contact with shaft seal shall be 32 microinches.
2. Spring shall have four full turns 0.50 inside diameter (id) min and 1 inch free length.

SH 132316874

FIGURE 16. Switch housing assembly. (32)

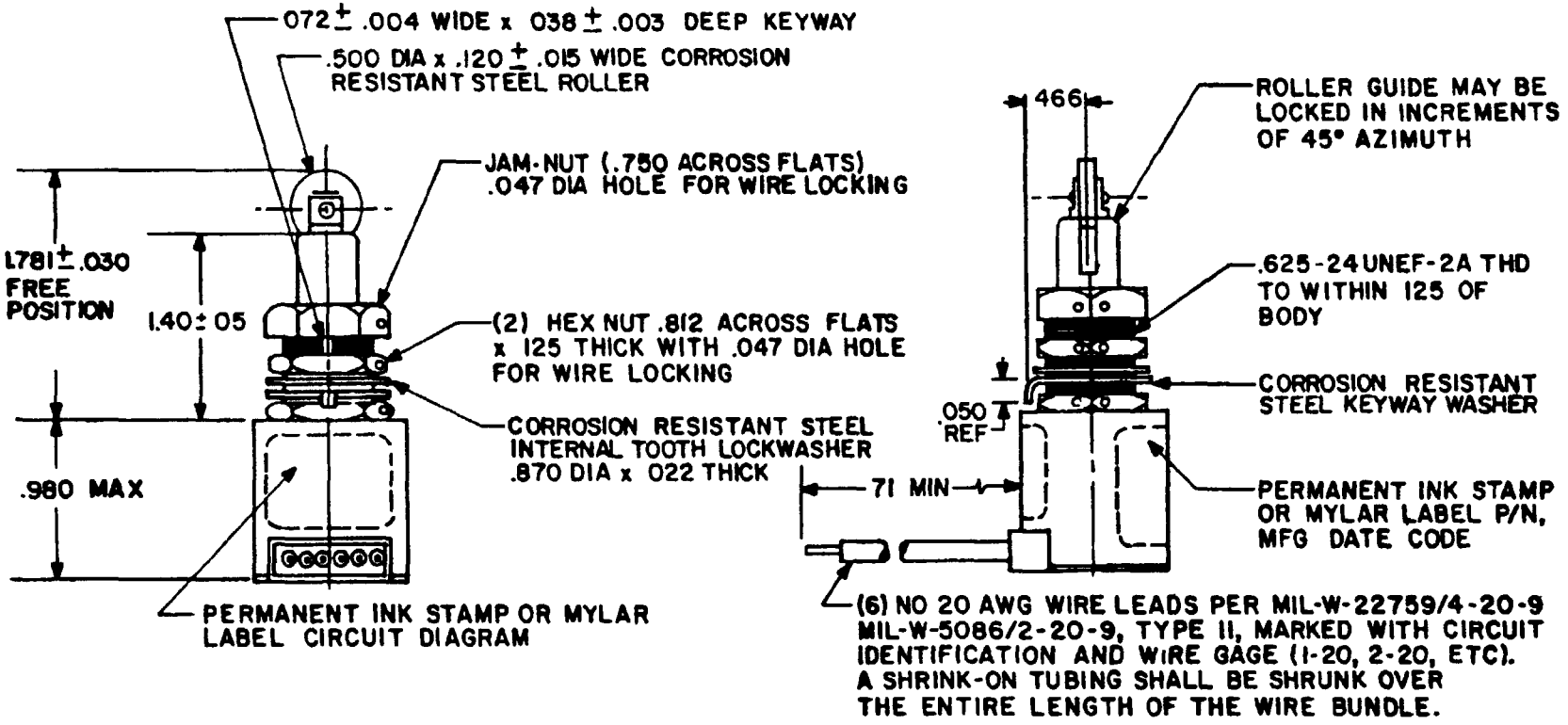

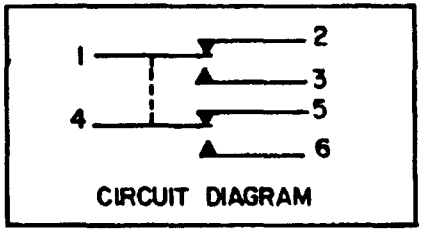

CHARACTERISTICS:

Contact arrangement	2 SPDT
Operating force	9+3 lbs
Full overtravel force	30 lbs max
Release force	4 lbs min
Pretravel	0.040 max
Movement differential	.020 max
Overtravel	.250 min
Break distance	.010 min
Mechanical and electrical endurance	See elect rating
Weight with leads	0.84 lbs - max

Enclosure design: Watertight in accordance with Enclosure Design #3 of MIL-S-8805

ELECTRICAL RATING:

Switch shall be 450 volt, 2 ampere, 60 hertz, and shall pass an endurance test of 25,000 cycles at 450 volts, 2 amperes (inductive; 75-80 percent P.F.), 60 hertz, 10 cycles per minute, on-off duration, 10 percent on

SOURCE OF SUPPLY:

LICON Dwg. No. 63-700091 or Micro Switch part no. 21EN-6 or equivalent.

SH 132316875

FIGURE 17. Switch. (40)

Downloaded from http://www.everyspec.com

Downloaded from http://www.everyspec.com

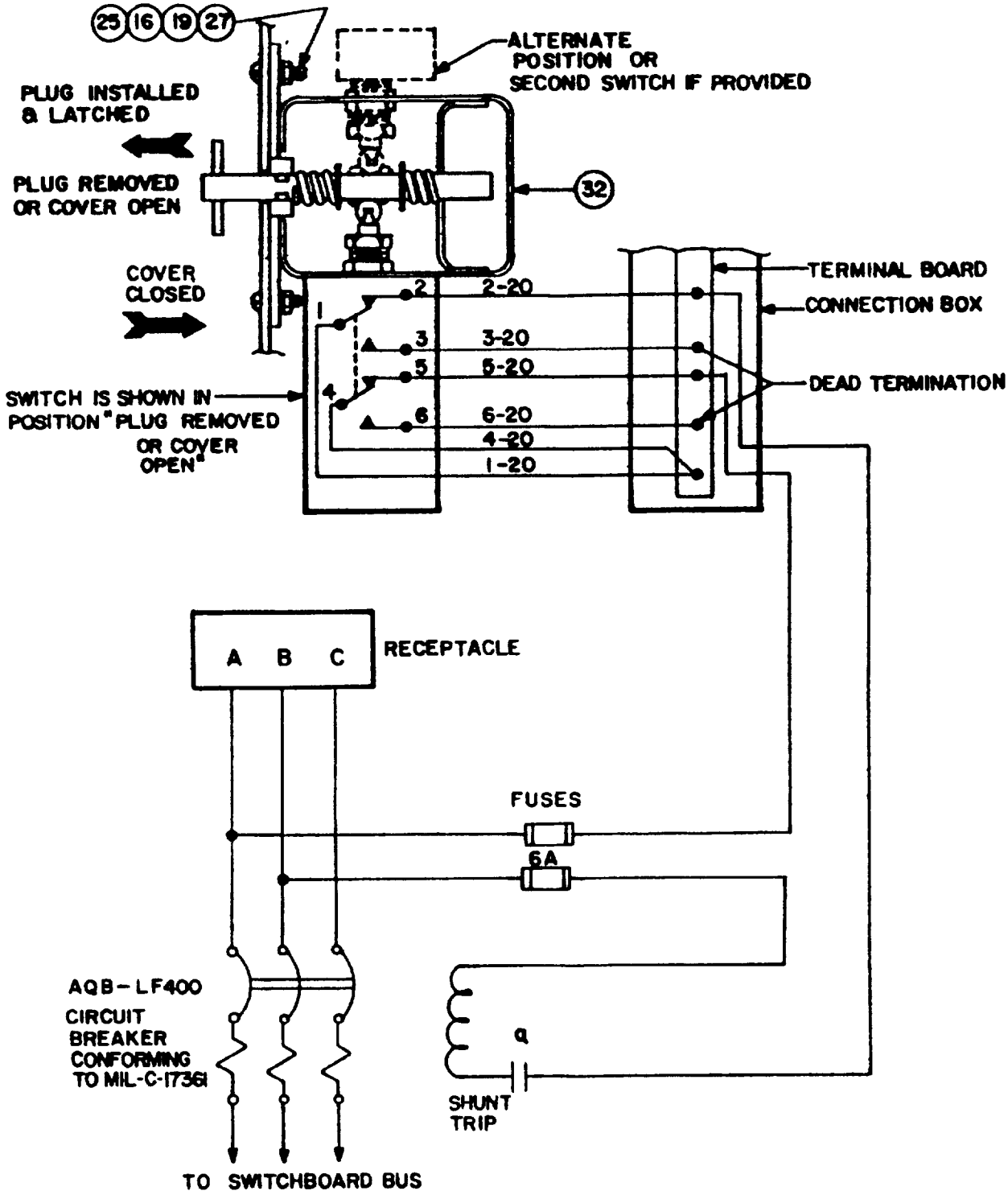

SH 132316876

FIGURE 18. Typical wiring of one shipboard manually operated shore power circuit breaker.

Downloaded from http://www.everyspec.com

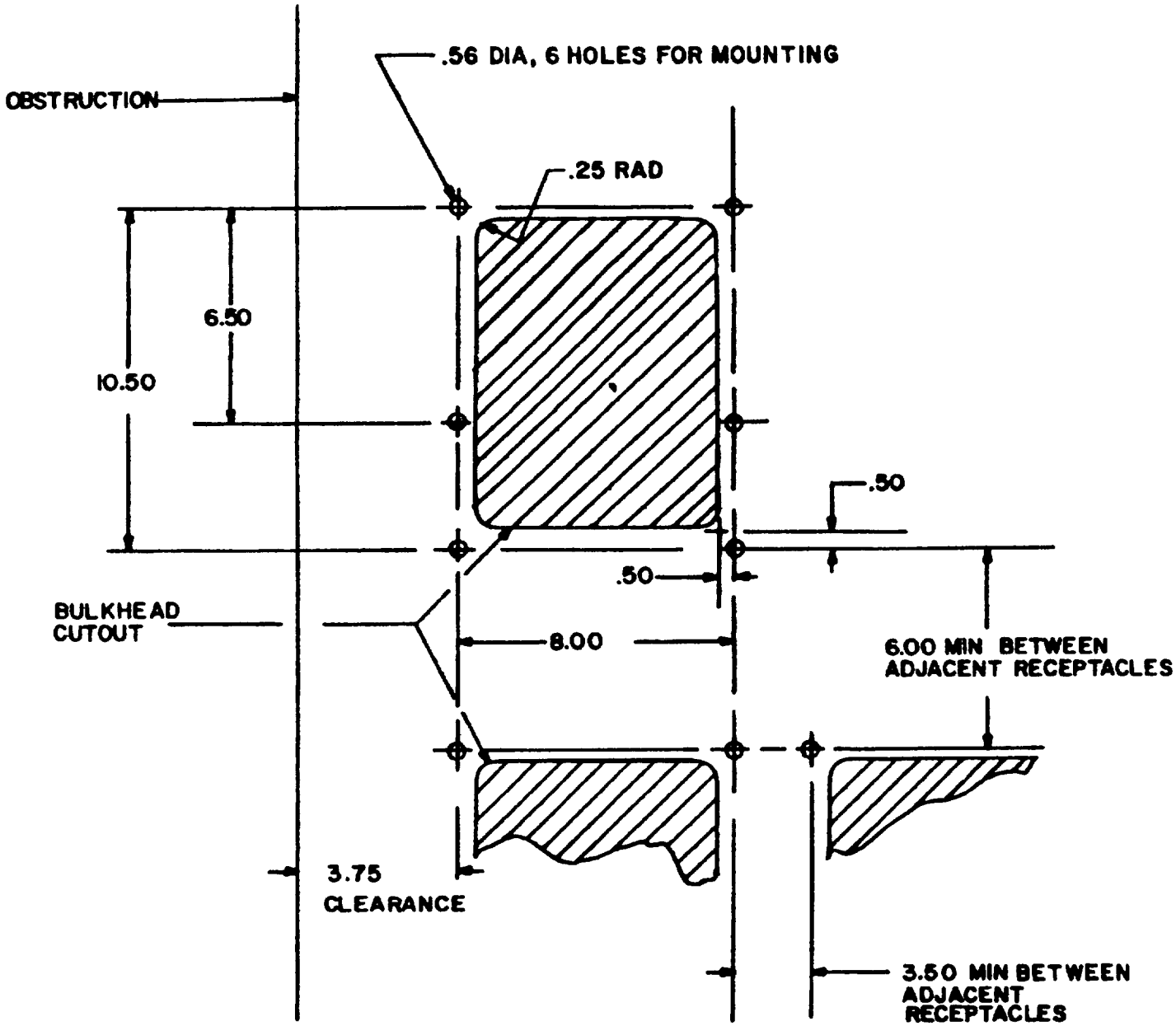

SH 132316877

FIGURE 19. Mounting dimensions, bulkhead cutout and clearance.

Downloaded from http://www.everyspec.com

REQUIREMENTS:

CONFIGURATION:

Electrical rating: 1/ 500 volts, 500 amperes, 60 hertz.

Dimensions and configuration: See figures 1 through 17.

Typical wiring: See figure 18.

Mounting dimensions: See figure 19.

Receptacle housing assembly: The receptacle shall be a unit having male contacts which is fixed on either the ship or shore installation. The receptacle housing shall provide a conical section for plug guiding, which shall protrude to protect the contact pins. A hinge point for the plug shall be provided. Provisions shall be made to replace the contact pins from the front of the receptacle, without removing the insert from the housing, for repairability. The cover shall be hinged to the receptacle housing, and shall have provisions for mechanically locking the cover closed. When the plug is engaged and latched or the cover is closed and latched, the switch shall be actuated.

Receptacle insert: The insert material shall be as shown in table II. Inserts shall have provisions for sealing between phases and external environments when receptacle and plug are mated and latched or when cover is closed and latched.

Contacts: The pin contact shall be mechanically and rigidly held in the insert. The contacts shall be in multiples per phase and terminated into a common bus bar per phase (see figures 10 and 12).

Cables: Cables shall be types 400 MCM or 500 MCM as shown in table I. Unless otherwise specified, cable length shall be 10 feet plus or minus 6 inches measured from the rear of the receptacle housing to the end of the cable. When receptacles are furnished without cable, the 500 MCM bus lugs shall have installed reducer inserts, item 33 of M24368/4. Receptacles with 400 MCM cables shall have reducer inserts installed in the 500 MCM bus lugs prior to crimping. Where single conductor cables are required, they shall be 400 MCM having the same characteristics as SHOF-500 cable, except for the rating. Highly flexible 400 MCM single conductor cable conforming to J-C-30 is also acceptable. On the 90 degree receptacle, the cable outer jacket may be removed from the bend area but shall terminate inside the portion by not less than 1 inch.

Switch housing: Box sides and top shall have no other openings except for the mounting plate and switches. Switch openings shall polarize the switches from turning. A bracket shall be provided to hold and polarize the plunger to prevent it from turning more than 3 degrees. The switch shall operate (make or break) when the plunger moves 0.25 inch maximum in either direction from the rest position shown on figure 16. Parts shall work in unison without binding. The plunger shall positively return to the rest position after release of pressure or pull on the plunger. Normally switch housing assemblies with one switch are used. Switch housing assemblies with two switches are used for special wiring purposes and they shall be furnished only when specified in the contract or order. When only one switch is provided, a dust plug or cap shall be installed in the empty switch hole, if required.

Potting: When the receptacle is to be provided with cables (see table I), the potting shall be accomplished in accordance with Drawing 803-5001027.

Downloaded from http://www.everyspec.com

REQUIREMENTS: (Continued)

Painting: Metal parts normally exposed to weather shall be painted. Painting shall be in accordance with MIL-E-917.
Standard parts: The standard parts shown in table II shall be used in the construction of the receptacle shown herein.

1/ When 400 MCM cable is used, the receptacle rating is reduced to 400 amperes.

QUALITY ASSURANCE:
(a) Impact: N/A
(b) Mechanical shock: N/A

GENERAL INFORMATION:
Assignment of military part numbers and general information is as follows and as shown in table I.

(a) Typical installation of shore power receptacle is shown in Drawing 803-5001027.

ORDERING DATA:
(a) Specify length when more than 10 feet plus or minus 6 inches of cable is required.
(b) Specify when two switches are required.

TABLE I. Assignment of military part numbers and general information.

Military part no. M24368/2-	Cable type (10 ft)	Formerly M24368/2A-
Straight receptacle - see figure 8		
001 thru 016	Discontinued	---
101	None	009 or 011
102	400 MCM1/	001
103	SHOF-500(3)	003
104	THOF-400	001
105	THOF-500	003
106	TSGU-400	001
107	TSGA-400	003
90 degree receptacle - see figure 9		
201	400 MCM1/	NONE
202	SHOF-500	NONE
203	THOF-400	NONE
204	THOF-500	NONE
205	TSGA-400	NONE
206	TSGU-400	NONE

1/ Three single conductor cables.

Downloaded from http://www.everyspec.com

TABLE II. Standard parts list.

Item no.1/	Description	Qty	Material/spec	Remarks
01	Receptacle, housing	1	CRES (cast as one pc.)	Figure 3
02	Cover, receptacle	1	CRES, coml	Figure 4
03	Seal, cover	1		Figure 14
04	Screw, set	1	NAS1081C4A12L	
05	Latch	1	CRES, coml	Figure 6
06	Bracket, latch locking	1	CRES, coml	Figure 7
07	Insert, receptacle	1	2/	Figure 10
08	Pin, contact	21		Figure 11
09	Gasket, receptacle	1		Figure 13
10	Seal, receptacle	1		Figure 15
11	Potting (straight 3 single cond)	1/2 gal		
12	Screw	8	MS16996-15	
13	Bolt	1	NAS1004-32A	
14	Nut	1	MS21043-4	
15	Washer, flat	21	NAS620C416L	
16	Washer, lock	23	MS35338-139	
17	Pin, cotter	2	MS24665-302	
18	Washer, flat	2	AN960C816L	
19	Washer, flat	2	AN960C416L	
20	Washer, flat	2	AN960C416	
21	Bus lug, 500 MCM	3	M24368/1 Item 05	
22	Washer, flat	8	AN960C10L or NAS620C10L	

See footnotes at end of table.

Downloaded from http://www.everyspec.com

TABLE II. Standard parts list. - Continued

Item no 1/	Description	Qty	Material/spec	Remarks
23	Washer, lock	8	MS35338-138	
24	Nut, hex	8	MS35650-304	
25	Screw, pan HD-self sealing	2	NT345S1428AC16	
26	Guide pin	1	MS16556-627	
27	Nut	2	MS51972-1	
28	Identification plate	1	3/	Figure 5
29	Warning plate	1	3/	Figure 2
30	Potting (straight, one 3 cond cable)	3/4 gal		Figure 8
31	Potting (angled)	1-3/4 gal		Figure 9
32	Switch housing assembly	1		Figure 16
33	Mounting plate	1	CRES, QQ-S-766	
34	Plunger	1	CRES, QQ-S-763, AL 304, Cond A 4/	
35	Cover, box	1	CRES, QQ-S-766	
36	Box, 0.062 thk	1	CRES, QQ-S-766	
37	Spring, 0.062	1	ASTM A 313	
38	Washer, 0.875 od, 0.50 id, 0.093 thk	AR	CRES, QQ-S-766	
39	Pin, cotter	2	CRES, QQ-S-763, AL 304, Cond A 4/	
40	Switch	1		Figure 17
41	Rivet, 0.218 button or round head	1	CRES, QQ-S-763, AL 304, Cond A 4/	ANSI B18.1.1
42	Shaft seal	1		5/

See footnotes at end of table.

Downloaded from http://www.everyspec.com

TABLE II. Standard parts list. - Continued

Item no.1/	Description	Qty	Material/spec	Remarks
43	Screw	4	CRES, QQ-S-763, AL 304, Cond A4/	
44	Washer, spring lock	4	CRES, QQ-S-766	
45	Nut, hex	4	CRES, QQ-S-763, AL 304, Cond A4/	
46	Screw	4	CRES, QQ-S-763, AL 304, Cond A4/	
47	Washer, spring lock	4	CRES, QQ-S-766	
48	Nut	4	CRES, QQ-S-763, AL 304, Cond A4/	
49	Rod	1	CRES, QQ-S-763, AL 304, Cond A4/	
50	Pin, spring, 0.062 dia, 0.50 L	1	Corrosion resistant steel, coml	
51	Insert, reducer	3	Item 33 of MIL-C-24368/4	See cable reqt.
52	Cable, SHOF-500	AR	MIL-C-24643/3	
53	Cable, THOF-400/500	AR	MIL-C-915/6	
54	Cable, TSGA-400	AR	MIL-C-24643/16	
55	Cable, TSGU-400	AR	MIL-C-24643/16	

1/ Item numbers are the same as numbers shown in circles on figures.
2/ Molding material shall be glass roving reinforced phenolic, color black, Fiberite Corp. FM 5064 or equivalent.
3/ Attachment may be by adhesive backing or blind rivets.
4/ An alternate material shall be AL 303, Cond A, conforming to ASTM A 582.
5/ Shaft seal shall be lubricated with a light film of silicone compound conforming to MIL-S-8660 at the time of assembly.

Downloaded from http://www.everyspec.com

Revision letters are not used to denote changes due to the extensiveness of the changes.

Review activity:
Navy - YD

User activity:
Navy - EC

Preparing activity:
Navy - SH
(Project 5935-N193-2)