Downloaded from http://www.everyspec.com

INCH - POUND
MIL-C-22230B(SH)
19 October 1987
SUPERSEDING
MIL-C-22230A(SHIPS)
24 February 1969
(See 6.5)

MILITARY SPECIFICATION

CLEANING COMPOUND, FUEL TANK AND BILGE

This specification is approved for use within the Naval Sea Systems Command, Department of the Navy, and is available for use by all Departments and Agencies of the Department of Defense.

1. SCOPE

1.1 Scope. This specification covers cleaning compound for use in cleaning fuel oil tanks and machinery space bilges.

2. APPLICABLE DOCUMENTS

2.1 Government documents.

2.1.1 Specifications and standards. The following specifications and standards form a part of this specification to the extent specified herein. Unless otherwise specified, the issues of these documents shall be those listed in the issue of the Department of Defense Index of Specifications and Standards (DoDISS) and supplement thereto, cited in the solicitation.

SPECIFICATIONS

FEDERAL

QQ-B-639 - Brass, Naval: Flat Products (Plate, Bar, Sheet and Strip).
QQ-S-766 - Steel Plates, Sheets, and Strip - Corrosion Resisting.

MILITARY

MIL-C-15726 - Copper-Nickel Alloy, Rod, Flat Products (Flat Wire, Strip, Sheet, Bar, and Plate) and Forgings.
MIL-S-22698 - Steel Plate and Shapes, Weldable Ordinary Strength and Higher Strength: Hull Structural.

Beneficial comments (recommendations, additions, deletions) and any pertinent data which may be of use in improving this document should be addressed to: Commander, Naval Sea Systems Command, SEA 5523, Department of the Navy, Washington, DC 20362-5101 by using the self-addressed Standardization Document Improvement Proposal (DD Form 1426) appearing at the end of this document or by letter.

AMSC N/A FSC 6850
DISTRIBUTION STATEMENT A Approved for public release; distribution unlimited

Downloaded from http://www.everyspec.com

STANDARDS

FEDERAL

FED-STD-313 - Material Safety Data Sheets Preparation and the Submission of.

FED-STD-791 - Lubricants, Liquid Fuels, and Related Products; Methods of Testing.

MILITARY

MIL-STD-105 - Sampling Procedures and Tables for Inspection by Attributes.

MIL-STD-290 - Packaging of Petroleum and Related Products.

2.1.2 Other Government publications. The following other Government publications form a part of this specification to the extent specified herein. Unless otherwise specified, the issues shall be those in effect on the date of the solicitation.

DEPARTMENT OF LABOR (OSHA)

Code of Federal Regulations (CFR)

29 CFR, Part 1910.1200

(Application for copies should be addressed to the Superintendent of Documents, U.S. Government Printing Office, Washington, DC 20402.)

(Copies of specifications, standards, publications and other Government documents required by contractors in connection with specific acquisition functions should be obtained from the contracting activity or as directed by the contracting activity.)

2.2 Other publications. The following documents form a part of this specification to the extent specified herein. Unless otherwise specified, the issues of the documents which are DoD adopted shall be those listed in the issue of the DoDISS specified in the solicitation. Unless otherwise specified, the issues of documents not listed in the DoDISS shall be the issue of the nongovernment documents which is current on the date of the solicitation.

AMERICAN SOCIETY FOR TESTING AND MATERIALS (ASTM)

B 209 - Standard Specification for Aluminum and Aluminum-Alloy Sheet and Plate. (Metric) (DoD adopted)

D 93 - Standard Test Methods for Flash Point by Pensky-Martens Closed Tester. (DoD adopted)

D 396 - Standard Specification for Fuel Oils. (DoD adopted)

D 445 - Standard Test Method for Kinematic Viscosity of Transparent and Opaque Liquids (and the Calculation of Dynamic Viscosity). (DoD adopted)

(Application for copies should be addressed to the American Society for Testing and Materials, 1916 Race Street, Philadelphia, PA 19103.)

Downloaded from http://www.everyspec.com

(Nongovernment standards and other publications are normally available from the organizations which prepare or which distribute the documents. These documents also may be available in or through libraries or other informational services.)

2.3 Order of precedence. In the event of a conflict between the text of this specification and the references cited herein (except for associated detail specifications, specification sheets or MS standards), the text of this specification shall take precedence. Nothing in this specification, however, shall supersede applicable laws and regulations unless a specific exemption has been obtained.

3. REQUIREMENTS

3.1 Material. The ingredient materials used in the manufacture of the cleaning compound shall be of a high quality, in solution as a single phase liquid, free from insoluble suspended or precipitated solids, and shall show no evidence of separation, gelling, or solidifying during handling or storage.

3.1.1 Toxic formulations. The compound, or a water solution of the compound, shall be free from toxicity and health hazards as defined in appendix A of 29 CFR 1910.1200. The material shall have no adverse effect on the health of personnel when used for its intended purpose. Questions pertinent to this effect shall be referred by the contracting activity to the Naval Medical Command (NAVMEDCOM) who will act as an advisor to the contracting activity (see 4.6).

3.2 Composition. The liquid shall be an emulsifier or a mixture of emulsifiers and solvents. It shall be free from caustic soda, benzol, chlorinated compounds, 2-butoxyelhanol, 2-methoxyethanol, 2-ethoxyethanol and their acetates.

3.3 Cleaning efficiency. The cleaning compound shall emulsify fuel oil in salt water and shall leave not more than 8 milligrams (mg) of oil, based on the average of 10 determinations (see 4.5.1).

3.4 Resistance to de-emulsification. Oil emulsified by the compound shall resist de-emulsification when diluted with salt water and shall produce, not more than 8 mg of de-emulsified oil, based on the average of 10 determinations (see 4.5.2).

3.5 Corrosivity. Aqueous solutions of the compound shall be less corrosive to mild steel, aluminum, brass, and copper-nickel than 3-1/2 percent salt water alone (see 4.5.3).

3.6 Flash-point. The closed-cup flash point of the compound shall be not less than 150 degrees Fahrenheit (°F) (see 4.5.4).

3.6.1 Labeling. Unless otherwise specified (see 6.2), each container of bilge cleaner shall be labeled with the actual flash point of the compound.

3.7 Miscibility with sea water. The compound shall be readily miscible in a 3-1/2 percent salt solution (see 4.5.5).

Downloaded from http://www.everyspec.com

3.8 Fluidity at 50°F. The compound shall be a fluid at 50°F, and shall have a viscosity at this temperature not in excess of 800 centipoises.

3.9 Material safety data sheet (MSDS). The contracting activity shall be provided a material safety data sheet (MSDS) at the time of contract award. The MSDS shall be provided in accordance with the requirements of FED-STD-313 and 29 CFR 1910.1200. When FED-STD-313 is at variance with the CFR, 29 CFR 1910.1200 shall take precedence, modify and supplement FED-STD-313. The MSDS shall be included with each shipment of the material covered by this specification (see 6.3).

4. QUALITY ASSURANCE PROVISIONS

4.1 Responsibility for inspection. Unless otherwise specified in the contract or purchase order, the contractor is responsible for the performance of all inspection requirements as specified herein. Except as otherwise specified in the contract or purchase order, the contractor may use his own or any other facilities suitable for the performance of the inspection requirements specified herein, unless disapproved by the Government. The Government reserves the right to perform any of the inspections set forth in the specification where such inspections are deemed necessary to assure supplies and services conform to prescribed requirements.

4.1.1 Responsibility for compliance. All items must meet all requirements of sections 3 and 5. The inspection set forth in this specification shall become a part of the contractor's overall inspection system or quality program. The absence of any inspection requirements in the specification shall not relieve the contractor of the responsibility of assuring that all products or supplies submitted to the Government for acceptance comply with all requirements of the contract. Sampling in quality conformance does not authorize submission of known defective material, either indicated or actual, nor does it commit the Government to acceptance of defective material.

4.2 Quality conformance inspection.

4.2.1 Sampling.

4.2.1.1 Lot. For purposes of sampling, a lot shall consist of all material formulated under the same conditions of production and offered for delivery at one time.

4.2.1.2 Sampling for examination of filled containers. A random sample of filled containers shall be selected from each lot in accordance with inspection level I of MIL-STD-105 with an acceptable quality level (AQL) of 2.5 percent defective, to verify compliance with all stipulations of this specification regarding fill, closure, marking and other requirements not involving tests.

4.2.1.3 Sampling for quality conformance inspection. Two samples of each lot shall be taken at random from the remaining containers selected in 4.2.1.2. Each sample shall contain approximately 1 quart (32 ounces) and shall be placed immediately in tightly stoppered bottles. The sample bottles shall be marked with name of manufacturer, contract number, and date on which the sample was taken. Each sample shall be kept separate and tested as specified in 4.4.

Downloaded from http://www.everyspec.com

4.3 Examination of filled containers. Each sample filled container selected in accordance with 4.2.1.2 shall be examined for defects of the container and closure, for evidence of leakage, and for unsatisfactory markings. Each sample filled container shall be weighed to determine the amount of the contents. Any container in the sample having one or more defects, or under required fill, shall be rejected. If the number of defective containers in any sample exceeds the acceptance number for the appropriate sampling plan in accordance with MIL-STD-105, the lot represented by the sample shall be rejected. Rejected lots may be resubmitted for examination provided that the contractor has removed or repaired all nonconforming containers.

4.4 Quality conformance tests. Tests for acceptance of individual lots shall be made and shall consist of all the tests as specified in 4.5.

4.5 Test methods.

4.5.1 Cleaning efficiency test. Test panels of corrosion-resisting steel, in accordance with QQ-S-766 (class 304 stainless steel, number 2 finish), 22-gauge sheet or strip stock, shall be prepared, each 1 by 3 inches. Sharp edges shall be smoothed with no. 1 emery cloth then cleaned in hot alkaline solution until free from water-break. The panels shall be rinsed in water, then dipped in 95 percent ethyl alcohol, and wiped dry with paper toweling.

4.5.1.1 Standard soil. The soiling material shall be Navy special grade fuel oil in accordance with ASTM D 396, grade 5, light and shall have a viscosity of 200 to 225 Standard Saybolt Universal (sSu) at 122°F. Two hundred ± 1 mg of this fuel oil shall be applied to one side of the panel, taking care to keep the oil away from the edges, as shown on figure 1. The oil shall be applied to the panel with a small brush.

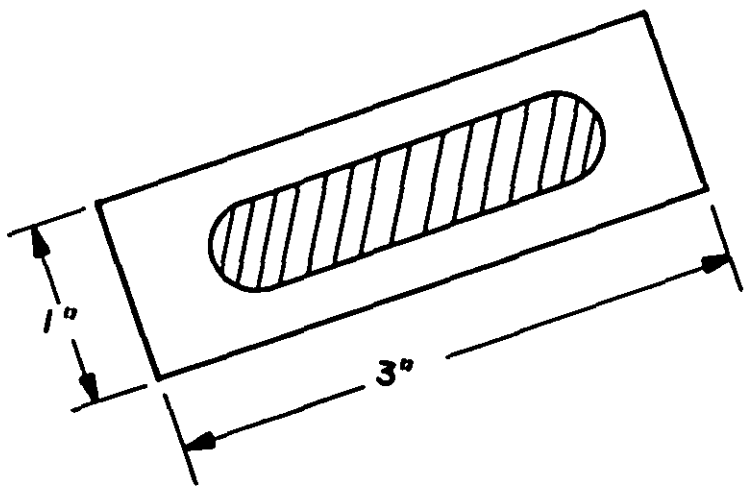

SH 13202659

FIGURE 1. Soiled test panel.

Downloaded from http://www.everyspec.com

4.5.1.2 Preparation of cleaning solution and apparatus. A solution of 3-1/2 percent salt water shall be prepared by dissolving 108 grams of c.p. sodium chloride in 3000 milliliters (mL) of distilled water. Nine mL of the compound being tested shall be added and mixed to the salt water solution. Three hundred mL of the mixed solution shall be transferred to each of the 10 test jars. The test jars shall be placed in a water bath on a Fisher oscillating hot-plate heater-agitator or equal. (Figures 2 and 3 show the test jar and water bath assembly.) The test jars shall be heated and agitated until the temperature of each solution reaches 160°F.

Downloaded from http://www.everyspec.com

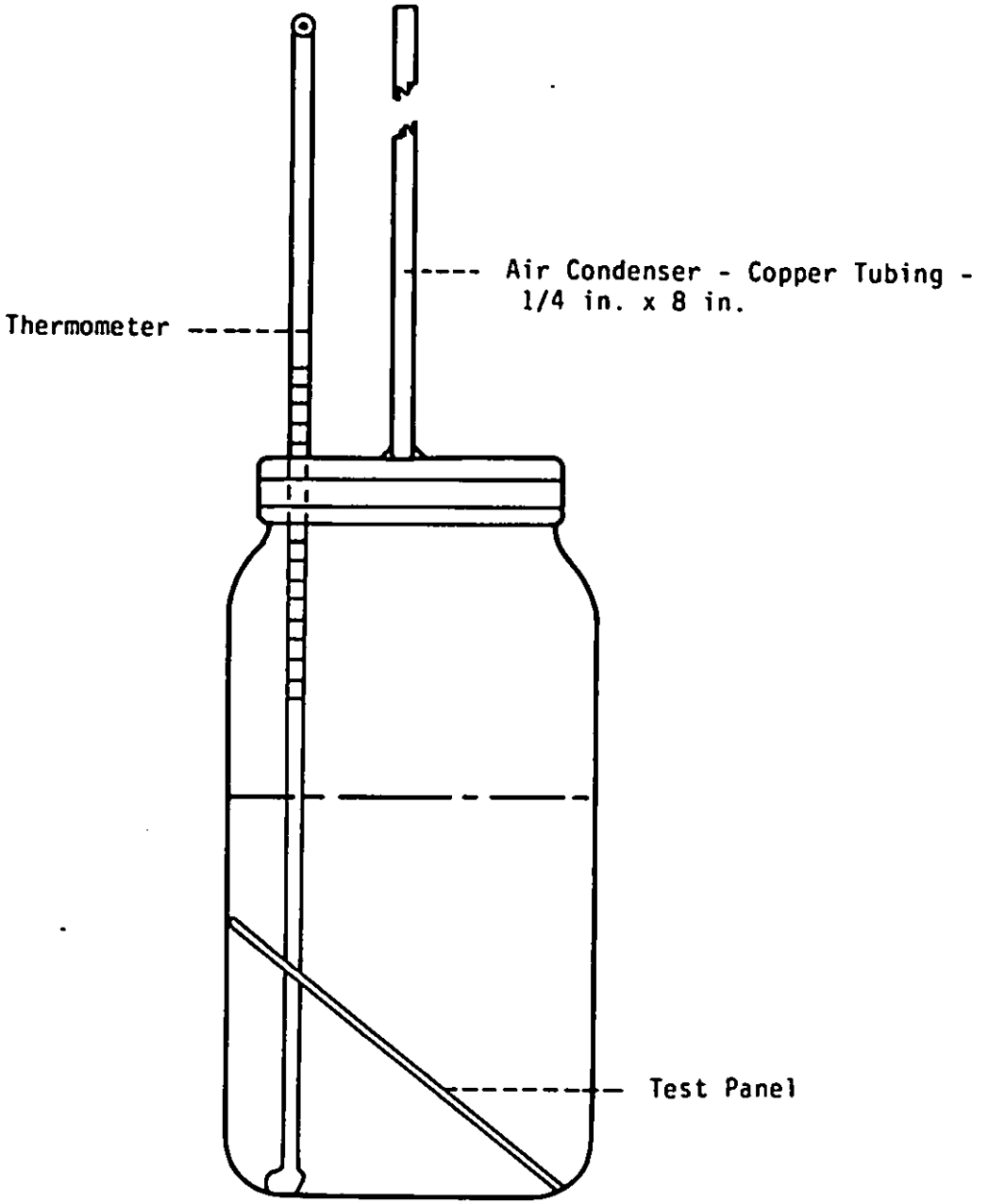

SH 13202660

FIGURE 2. Test jar and panel.

Downloaded from http://www.everyspec.com

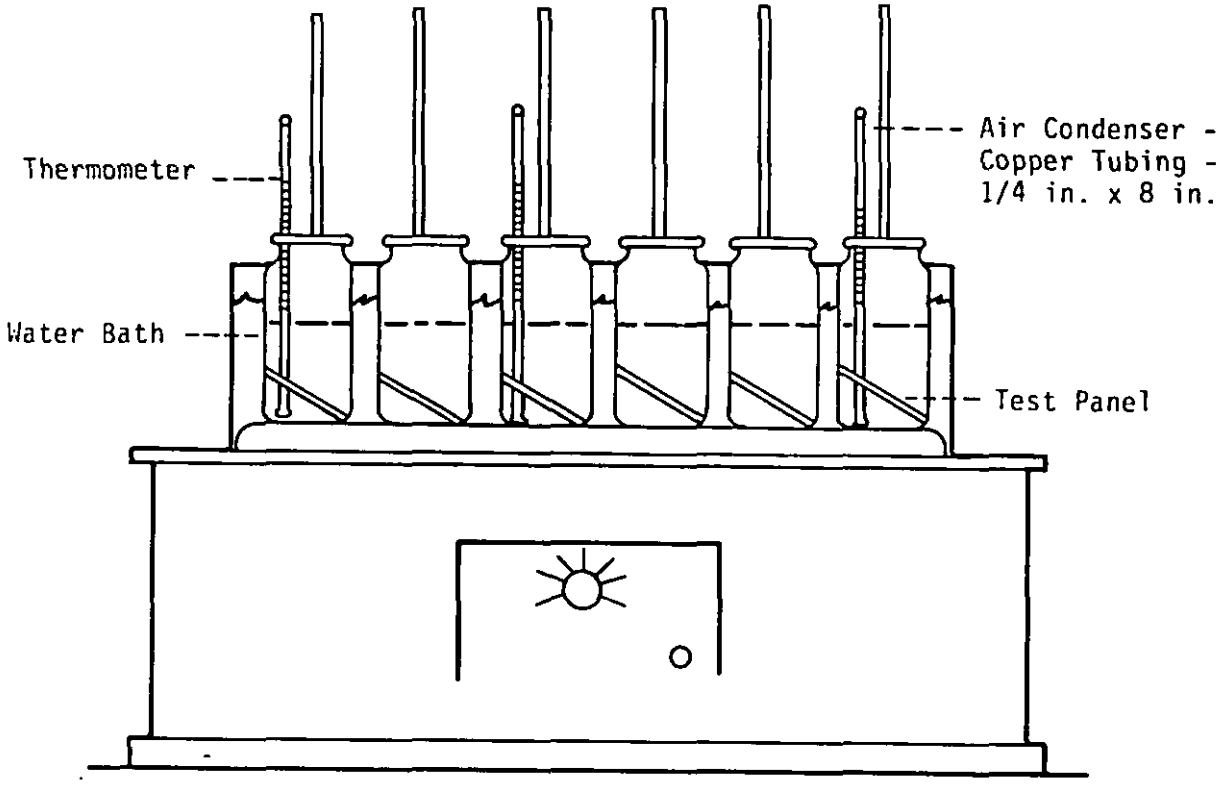

SH 13202661

FIGURE 3. Cleaning efficiency test assembly.

Downloaded from http://www.everyspec.com

4.5.1.3 Procedure for test. When the solutions have reached 160°F, a soiled panel shall be inserted in each test jar, with the soiled side up, as shown on figures 2 and 3. The test jars shall be agitated for 60 minutes; the temperature of each solution shall be maintained at 160°F. One test jar shall be removed and its liquid contents poured into a 2 liter (L) Erlenmeyer flask or equal. The jar shall be rinsed with 200 mL of 3-1/2 percent salt solution (110°F) by inverting the jar 10 times, and rinse water shall be emptied into the 2 L flask. The rinsing operation shall be repeated. The 2 L flask shall be filled with 3-1/2 percent sodium chloride solution until the liquid rises to within 50 mL of the top of the flask. Each test jar and flask shall be treated similarly, leaving the test panel in each jar. The flasks and their contents shall be reserved for the "resistance to de-emulsification" test. The residual oil on the test strip and in the jar shall be extracted with a solvent and measured photometrically as described below. Ten tests shall be made simultaneously and the results averaged.

4.5.1.4 Residual oil determination. The residual oil shall be extracted from the pint jar surfaces and the test strip using 25 mL of carbon tetrachloride. The extract shall be filtered through a dry filter paper and the amount of oil present shall be determined by measuring the oil content photometrically at a wave length of 700 nanometers (nm) using a photometer similar to a Bausch and Lomb Spectronic 20.

4.5.2 Resistance to de-emulsification. The 10 liquid samples reserved as specified in 4.5.1.3 shall be used for the tests of resistance to de-emulsification. After a 24 hour setting time at 77°F, the supernatant oil in each flask shall be dissolved by adding 25 mL of benzol to the neck of the flask. The benzol layer shall be agitated gently with a glass stirring rod to dissolve any de-emulsified oil on the salt water surface. A portion of the supernatant oil solution shall be carefully removed with a syringe, and the oil content shall be determined photometrically at a wave length of 700 nm.

4.5.3 Corrosivity test. The test for corrosivity shall be conducted as follows:

4.5.3.1 Preparation of test panels. Test panels shall be prepared of mild steel, aluminum, brass, and copper-nickel each 20 gauge, 1 by 6 inches in size in accordance with MIL-S-22698, grade A, class U, ASTM B 209, QQ-B-639, number 464, and MIL-C-15726, alloy CT0600, respectively. (Commercial designations are AISI 1020 steel, 5454 aluminum alloy, Naval brass, and 90-10 copper-nickel respectively.) Sharp edges shall be smoothed with no. 1 emery cloth. The panels shall be cleaned in a hot alkaline solution until free from waterbreak. The test panels shall be rinsed in water, then dipped in 95 percent ethyl alcohol, and wiped dry with paper toweling. Each panel shall be weighed on an analytical balance.

4.5.3.2 Procedure for test. Five weighed test panels of each metal shall be folded and placed on edge in separate flasks as shown on figure 4. A mixture of 3 mL of the cleaning compound and 300 mL of 3-1/2 percent sodium chloride solution shall be placed in each flask. This mixture shall be raised to 160 ± 2°F within 1 hour, and maintained at 160 ± 2°F for 24 hours, using the apparatus as shown on figure 4. The panels shall be removed from the solution, wiped dry, and the products of corrosion removed by use of a stiff brush. The panels shall be cleaned and dried using 95 percent ethyl alcohol and paper toweling. The loss of weight shall be based upon the average of five determinations.

Downloaded from http://www.everyspec.com

The procedure shall be repeated using 3-1/2 percent salt water and metal panels, but without the compound. Weight loss averages obtained with the compound shall be not more, for each type metal panel, than with the 3-1/2 percent salt water alone.

4.5.4 Flash point. Flash point shall be determined in accordance with method 1102.12 of FED-STD-791 (see ASTM D 93).

4.5.5 Miscibility test with salt water. A mixture of one part compound and 100 parts of 3-1/2 percent salt water shall be placed in a test jar similar to that used in the cleaning efficiency test (see 4.5.1) and heated, with agitation, for 1 hour at 160°F. The test shall be repeated at 77°F. No separation of compound shall be visible after 1 hour of agitation at either 160 or 77°F.

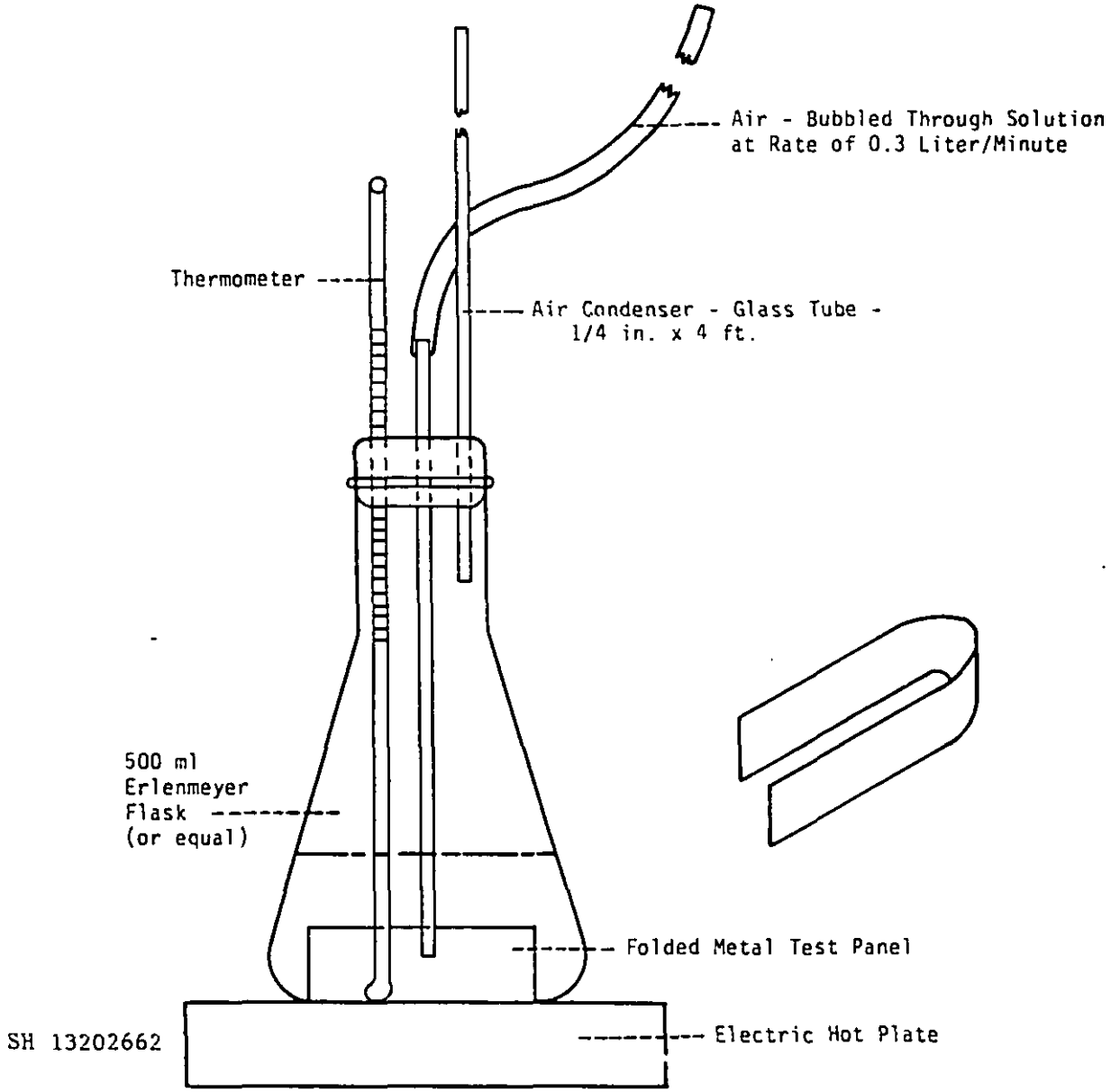

FIGURE 4. Corrosivity test assembly.

Downloaded from http://www.everyspec.com

4.5.6 Viscosity. Viscosity at 50°F shall be determined in accordance with ASTM D 445.

4.6 Toxicity. To determine conformance to requirements of 3.1.1, the manufacturer of the material shall disclose the formulation of this product to the Naval Medical Command, MEDCOM-242, Washington, DC 20372. The disclosure of proprietary information, which shall be held in confidence by the Naval Medical Command, shall include: the name, formula, and approximate percentage by weight and volume of each ingredient in the product; the results of any toxicological testing of the product; identification of its pyrolsis products; and any such other information as may be needed to permit an accurate appraisal of any toxicity problem associated with the handling, storage, application, use, disposal, or combustion of the material.

4.7 Inspection of packaging. Sample packages and packs, and the inspection of the preservation-packaging, packing and marking for shipment and storage shall be in accordance with the requirements of section 5 and the documents specified therein.

5. PACKAGING

(The packaging requirements specified herein apply only for direct Government acquisition.)

5.1 Packing. Cleaning compound shall be furnished in 5-gallon pails or 55-gallon drums (see 6.2) and packed level B, C or commercial as specified (see 6.2) in accordance with MIL-STD-290.

5.2 Palletization. When specified (see 6.2), pails and drums shall be palletized as specified in MIL-STD-290.

5.3 Marking. In addition to any special marking required (see 6.2), or herein (see 5.3.1) pails, drums and palletized loads shall be marked in accordance with MIL-STD-290 and 29 CFR, Part 1910.1200.

5.3.1 Special marking.

5.3.1.1 Caution label. The following label indicating the flash point of the compound shall appear prominently on each pail or drum of fuel tank and bilge cleaning compound:

"CAUTION-CLEANING COMPOUND HAS A
FLASH POINT OF ___ °F

Do not apply full strength to hot surface, near open flames, sparks, or electrical fixtures. Do not use air pressure to empty this container. Do not apply full strength in a fine spray."

Downloaded from http://www.everyspec.com

6. NOTES

6.1 Intended use. This compound is intended for use in cleaning fuel oil tanks (Navy special or diesel), lubricating oil tanks, and machinery space bilges by emulsification of the oil. This compound should not be used in cleaning turbine fuel (JP-4, JP-5 and JP-8) or gasoline tanks because of detrimental effects of trace residues of the cleaner on performance of coalescer-type filters installed for these tanks. This compound also adversely affects the performance of oily water separator (OWS) systems which require a weakly emulsifying detergent such as MIL-D-16791.

6.2 Ordering data. Acquisition documents should specify the following:

(a) Title, number, and date of this specification.
(b) Unit quantity required (see 5.1).
(c) Level of packing, B, C, or commercial required (see 5.1).
(d) When pails and drums should be palletized (see 5.2).
(e) Special marking, if required (see 5.5).

6.3 Material safety data sheets. Contracting officers will identify those activities requiring copies of completed material safety data sheets prepared in accordance with FED-STD-313 and CFR 1910.1200. The pertinent Government mailing addresses for submission of data are listed in appendix B of FED-STD-313. In order to obtain the MSDS, FAR clause 52.223-3 must be in the contract.

6.4 Subject term (key word) listing.

Cleaning efficiency test, fuel oil
De-emulsification resistance
Emulsifying cleaner
Miscibility

6.5 Changes from previous issue. Asterisks are not used in this revision to identify changes with respect to the previous issue due to the extensiveness of the changes.

Preparing activity:
Navy - SH
(Project 6850-N808)

Downloaded from http://www.everyspec.com

STANDARDIZATION DOCUMENT IMPROVEMENT PROPOSAL

(See Instructions – Reverse Side)

1. DOCUMENT NUMBER	2. DOCUMENT TITLE
MIL-C-22230B(SH)	CLEANING COMPOUND, FUEL TANK AND BILGE

3a. NAME OF SUBMITTING ORGANIZATION

b. ADDRESS *(Street, City, State, ZIP Code)*

4. TYPE OF ORGANIZATION *(Mark one)*

- ☐ VENDOR
- ☐ USER
- ☐ MANUFACTURER
- ☐ OTHER *(Specify)*: _____

5. PROBLEM AREAS

a. Paragraph Number and Wording:

b. Recommended Wording:

c. Reason/Rationale for Recommendation:

6. REMARKS

7a. NAME OF SUBMITTER *(Last, First, MI)* – Optional

b. WORK TELEPHONE NUMBER *(Include Area Code)* – Optional

c. MAILING ADDRESS *(Street, City, State, ZIP Code)* – Optional

8. DATE OF SUBMISSION *(YYMMDD)*

(TO DETACH THIS FORM, CUT ALONG THIS LINE.)

DD FORM 82 MAR 1426

PREVIOUS EDITION IS OBSOLETE.