Downloaded from http://www.everyspec.com

INCH-POUND

MIL-C-18295E
14 April 1992
SUPERSEDING
MIL-C-18295D
12 January 1976

MILITARY SPECIFICATION

CHAINS AND FITTINGS FOR FLEET MOORING

This specification is approved for use by all Departments and Agencies of the Department of Defense.

1. SCOPE

1.1 Scope. This specification establishes the requirements for the manufacture, physical performance, and acceptance of mooring chain assemblies. Mooring chain assemblies are to be subjected to long term submergence in seawater and may also be subjected to open storage in a marine environment.

1.2 Classification.

1.2.1 Group and type. Fleet mooring chain assemblies, unless otherwise specified, are classified and identified by a Part Identifying Number (PIN) as follows:

Mooring Chain Assembly:		PIN
Group I	- Chain	
	Type 1 - Chain link with studs modified to accept cathodic protection.	I-1
	Type 2 - Chain link with studs not modified for cathodic protection.	I-2
Group II	- Shackle	
	Type 1 - Swivel shackle.	II-1
	Type 2 - Plate sinker shackle.	II-2
	Type 3 - Anchor shackle.	II-3

Beneficial comments (recommendations, additions, deletions) and any pertinent data which may be of use in improving this document should be addressed to: Commanding Officer (Code 156), Naval Construction Battalion Center, Port Hueneme, CA 93043-5000, by using the self-addressed Standardization Document Improvement Proposal (DD Form 1426) appearing at the end of this document or by letter.

AMSC N/A FSC 4010

DISTRIBUTION STATEMENT A. Approved for public release; distribution is unlimited.

Downloaded from http://www.everyspec.com

	Type 4 - Joining shackle.	II-4
	Type 5 - Buoy shackle.	II-5
Group III -	Links	
	Type 1 - Chain joining link.	III-1
	Type 2 - Pear link.	III-2
	Type 3 - Anchor joining link.	III-3
	Type 4 - End link.	III-4
Group IV -	Miscellaneous	
	Type 1 - Ground ring.	IV-1
	Type 2 - Spider plate.	IV-2

1.2.2 Part identification number (PIN). A PIN has been established (see 1.2.1 and 6.2.1).

1.3 Definitions. Definitions of terms applicable to this specification can be found in section 6.3.

2. APPLICABLE DOCUMENTS

2.1 Government documents.

2.1.1 Specifications and standards. The following specifications and standards form a part of this document to the extent specified herein. Unless otherwise specified, the issues of these documents are those listed in the issue of the Department of Defense Index of Specifications and Standards (DODISS) and supplement thereto, cited in the solicitation (see 6.2).

SPECIFICATIONS

FEDERAL

TT-V-51 - Varnish Asphalt.
TT-P-1757 - Primer Coating, Zinc Chromate, Low Moisture-Sensitivity.
VV-G-671 - Grease, Graphite.

MILITARY

MIL-I-45208 - General Specification for Inspection Requirements.

STANDARDS

FEDERAL

FED-STD-313 - Material Safety Data, Transportation Data and Disposal Data for Hazardous Materials Furnished to Government Activities.

MILITARY

MIL-STD-129 - Marking for Shipment and Storage.
MIL-STD-248 - Welding and Brazing Procedure and Performance Qualification.

Downloaded from http://www.everyspec.com

MIL-STD-271 - Requirements for Nondestructive Testing Methods.
MIL-STD-1265 - Radiographic Inspection, Classification, and Soundness Requirements for Steel Castings.
MIL-STD-2035 - Nondestructive Testing Acceptance Criteria.

(Unless otherwise indicated, copies of federal and military specifications, standards, and handbooks are available from the Standardization Documents Order Desk, Bldg. 4D, 700 Robbins Avenue, Philadelphia, PA 19111-5094.)

2.2 Non-Government publications. The following documents form a part of this specification to the extent specified herein. Unless otherwise specified, the issues of the documents which are DoD adopted are those listed in the issue of the DODISS cited in the solicitation. Unless otherwise specified, the issues of documents not listed in the DODISS are the issues of the documents which are current on the date of the solicitation (see 6.2).

AMERICAN SOCIETY OF MECHANICAL ENGINEERS (ASME)

ASME B4.1 - Preferred Limits and Fits for Cylindrical Parts.

(Application for copies should be addressed to the American Society of Mechanical Engineers, United Engineering Center, 345 East 47th Street, New York, NY 10017.)

ASTM

ASTM A36 - Standard Specification for Structural Steel.
ASTM A240 - Standard Specification for Heat-Resisting Chromium and Chromium-Nickel Stainless Steel Plate, Sheet, and Strip for Pressure Vessels.
ASTM A354 - Standard Specification for Quenched and Tempered Alloy Steel Bolts, Studs, and Other Externally Threaded Fasteners.
ASTM A370 - Standard Test Methods and Definitions for Mechanical Testing of Steel Products.
ASTM A380 Practice For Cleaning and Descaling Stainless Steel Parts, Equipment, and Systems.
ASTM A563 - Standard Specification for Carbon and Alloy Steel Nuts.
ASTM A751 - Standard Test Methods, Practices, and Definitions for Chemical Analysis of Steel Products.
ASTM E3 - Standard Method of Preparation of Metallographic Specimens.
ASTM E4 - Standard Practices for Load Verification of Testing Machines.
ASTM E10 - Standard Test Method for Brinell Hardness of Metallic Materials.
ASTM E59 - Standard test Method for Sampling Steel and Iron for Determination of Chemical Composition.
ASTM E112 - Standard Test Methods for Determining Average Grain Size.
ASTM E340 - Standard Methods for Macroetching Metals and Alloys.
ASTM E381 - Standard Methods of Macroetch Testing, Inspection, and Rating Steel Products, Comprising Bars, Billets, Blooms, and Forgings.
ASTM E407 - Standard Methods for Microetching Metals and Alloys.

(Applications for copies should be addressed to ASTM, 1916 Race Street, Philadelphia, PA 19103-1187.)

Downloaded from http://www.everyspec.com

AMERICAN WELDING SOCIETY (AWS)

D1.1 Structural Welding Code, Steel.

(Applications for copies should be addressed to the American Welding Society, Inc., 550 N.W. LeJune Road, P.O. Box 351040, Miami, FL 33135-3030.)

SOCIETY OF AUTOMOTIVE ENGINEERS, INC. (SAE)

SAE J404 - Chemical Composition of SAE Alloy Steels.

(Application for copies should be addressed to the Society of Automotive Engineers, Inc., 400 Commonwealth Drive, Warrendale, PA 15096.)

STEEL STRUCTURES PAINTING COUNCIL (SSPC)

Surface Preparation Specification (SSPC) No.10, Near White Blast Cleaning.

(Applications for copies should be addressed to the Steel Structures Painting Council, 4400 Fifth Avenue, Pittsburgh, PA 15213-2683.)

(Non-Government standards and other publications are normally available from the organizations that prepare or distribute the documents. These documents also may be available in or through libraries or other informational services.)

3. REQUIREMENTS

3.1 General. The fleet mooring chain assembly includes stud link chain and joining components. A ground leg subassembly attaches anchors to a ground ring which, in turn, is attached to a riser subassembly which is attached to a buoy. The chain assemblies are intended for continuous use for long periods of time.

3.1.1 Construction. The mooring chain assembly shall be fabricated and conform to material composition of SAE J404, class 1330 and 4340 (UNS G13300 and G43400) as modified herein.

3.1.2 Chain, Type 1. The chain link stud shall be modified to receive cathodic protection (see 3.3.6, 6.2 and figures 1b,1c, and 1d).

3.1.3 Chain, Type 2. The chain link stud shall not be modified for cathodic protection (see 6.2).

3.2 Figures and tolerance. Figures 1a-1, 1a-2, 1b, 1c, 1d, 2, 3, 4, 5, 5a, 5b, through 21, are not intended as engineering drawings. All components to be manufactured must meet the requirements set forth in this specification and be compatible with other components as specified in this specification. All components must satisfy requirements specified in figures 1a through 21 as applicable. When specified in the contract (see 6.2), component manufacturers shall provide fabrication drawings with dimensions prior to manufacturing.

Unless otherwise specified, casting tolerances shall be in accordance with SFSA Steel Casting Handbook, Supplement 3 (see 6.2).

Downloaded from http://www.everyspec.com

3.2.1 Components. The following items are components of a mooring chain assembly:

Stud link chain (figures 1a-1, 1a-2, 1b, 1c, 1d) procured in 90-foot lengths (shot).
Chain joining link (figure 2).
Anchor joining link (figure 3).
Ground ring (figure 4).
Swivel shackle (figure 5, 5a, 5b).
Spider plate (figure 6).
Plate sinker shackle (figure 7).
Pear link (figure 8).
End link (figure 9).
Joining shackle (figure 10).
Anchor shackle (figure 11).
Buoy shackle (figure 12).

3.3 Material and mechanical properties. The material used in the manufacture of mooring chain assemblies, except for the plate sinker shackle (see 3.3.1), shall meet the mechanical properties of table I. The finished components shall meet the physical properties of table II. The physical and mechanical properties of the steel and finished components shall be part of the Certificate of Compliance (CoC). Components of the same size but fitted to varying nominal size components shall be tested to the highest nominal size criteria.

TABLE I. Mechanical properties.

Property	Mooring[1/] Chain Assembly Components	Swivel Shackle Pins Only	Pear Links
Ultimate strength (tensile)			
minimum	93,000 psi	145,000 psi	150,000 psi
maximum	115,000 psi	170,000 psi	
Elongation minimum (gage length = 5X specimen diameter)	17 percent	12 percent	9 percent
Reduction in area minimum	40 percent	40 percent	22 percent
Brinell Hardness (standard ball: 10mm ball and 3000 Kg load)			
Chain	192 - 229	321 - 365	300 - 370
Accessories	192 - 235		
Impact; average of three specimens at 32° (minimum)			
Bar stock	43 ft.lb	43 ft.lb	30 ft.lb
Across weld	36 ft.lb		26 ft.lb
Cast components	43 ft.lb		15 ft.lb

1/ Except pear links, plate sinker shackles, swivel shackle pins, split keys, tapered pins, and lead plugs.

Downloaded from http://www.everyspec.com

TABLE II. Physical properties of finished mooring chain assembly components 1/.

Chain Diameter (inches)	Proof Load (lbs)	Minimum Breaking Load (lbs)	Minimum Chain Weight per shot (lbs)
1.75	247,000	352,000	2590
2.00	318,000	454,000	3360
2.25	396,000	570,000	4250
2.50	484,000	692,000	5270
2.75	578,000	826,000	6410
3.00	679,000	970,000	7650
3.50	900,000	1,285,000	10500
4.00	1,143,000	1,632,000	13700

1/ Except plate sinker shackles, split keys, tapered pins, and lead plugs.

3.3.1 Plate sinker shackle. The requirements specified in tables I and II do not apply to plate sinker shackles and their bolts. Shackle material and fabrication shall be in accordance with figure 7. Surface inspection as required in section 4.6.3 and proof and break loads required herein are the only test requirements for the plate sinker shackle. The following proof and break load requirements shall apply:

Nominal chain size (in)	Proof (lbs)	Break, Min. (lbs)
1 3/4 to 2	60,000	135,000
2 1/4 to 4	120,000	200,000

3.3.2 Weight of each shot. The weight of each shot shall not be less than that specified in table II.

3.3.3 Lead plug. All chain and anchor joining links, swivel shackles, joining shackles, and anchor shackle shall include a lead plug for each tapered retaining pin which will be hammered into the dovetail chamber to securely hold the pin in place. The lead plug shall be sized for the specific nominal size component. The least diameter of the plug shall be the same as the largest diameter of the tapered pin. The plug shall mushroom out when hammered to completely fill the dovetail chamber. The lead plug shall not be inserted by the manufacturer (see figure 5a). Lead plugs shall be packed separately by size and clearly marked.

3.3.4 Tapered pins and split keys. All joining links, swivel shackles, joining shackles, and the anchor joining shackle shall have tapered pins for securing the main pin in place. The chamber which accepts the tapered pin shall

Downloaded from http://www.everyspec.com

be dovetailed at the larger end of the pin hole to retain the lead plug specified in section 3.3.3. The tapered pin shall fit in the chamber flush with the bottom of the dovetail section to allow room for the lead plug. Tapered pins and split keys are exempt from the physical, mechanical, and metallurgical requirements of the link proper. Swivel shackles shall have two tapered pins securing each main pin. The split keys and tapered pins shall be corrosion resistant steel (CRS) conforming to class 316 of ASTM A240. The fit for tapered pins shall be interference fit and for split keys shall be locational clearance fit as specified in ASME B4.1 (see figures 2, 3, 5, 5a, 5b, 10, 11, and 12). Provide extra tapered pins, split keys, and lead plugs when specified (see 6.2).

3.3.5 Joining links. The design of all joining links shall be as shown on figures 2 and 3. All of the constituent parts of each joining link shall have tolerances sufficiently small to eliminate slack or internal displacement of the parts. No sharp corners shall be allowed.

3.3.6 Group I, Type 1. Unless otherwise specified (see 6.2), Type 1 fleet mooring chain assemblies shall have chain studs modified as described in 3.3.6.1 and 3.3.6.2.

3.3.6.1 Anode mounting hole. A 0.375-inch 16UNC-2B hole shall be tapped in the chain stud as specified on figure 1b. Following heat treatment and satisfactory inspection of the chain, the hole shall be filled with graphite grease conforming to VV-G-671, Grade 2. The hole shall be fitted with a screw as shown on figure 1c to prevent the hole from being filled with coating material. The screw shall be CRS Class 316 of ASTM A240, 0.375-inch diameter, 16UNC-2A thread by 0.50 inch long with a hexagon head. The manufacturer shall ensure that the threads of the anode mounting hole are not damaged due to overtightening the screw.

3.3.6.2 Alignment and orientation of anode mounting hole. The stud shall be placed in the link so that the threaded hole is aligned as specified on figure 1b. The studs shall be oriented so that the threaded holes face alternately, as shown in figure 1d.

3.3.7 Swivel shackle. The swivel shackle shall conform to the mechanical, physical, and chemical requirements of tables I, II, III, and in general to the configuration of figures 5, 5a, and 5b. The swivel shaft and body shall not separate by actions produced during any mooring situation for the life of the mooring assembly. The swivel body shall rotate on the shaft while suspended while holding a weight equivalent to one shot of its associated chain size (see 4.6.4). The method of retaining the shaft into the body shall be by threaded shaft and nut with coarse, UNR, or ACME threads and double phosphorous bronze washers with locking device, or with double phosphorous bronze washers and a button and peening the shaft. Unless specified in the contract the method of retaining the shaft in the body shall be the manufacturer's option of one of the two methods specified herein. The retainer nut or button may be welded to the shaft for locking unless otherwise specified (see 6.2).

3.3.7.1 Compatibility. The swivel shall be compatible with the intended component parts of the mooring chain assembly. The component parts, when attached to the swivel shackle shall be free to hinge 15° from the long axis of the component parts and swivel shackle at every 90° (0°, 90°, 180°, 270°) on the

Downloaded from http://www.everyspec.com

circular plane perpendicular to the long axis. For reference, 0° on the circular plane is parallel to the shackle main pins.

3.3.7.2 Shackle pins. The shackle pins shall have a locational clearance fit as specified in ASME B4.1 unless otherwise specified (see 6.2).

3.3.8 Spider plate. Hole 1, as specified on figure 6, shall be compatible with the small end of 3.50-inch and 4-inch nominal chain size anchor joining links and shall meet the proof and break load requirements of 4-inch chain. Holes 2 and 3 shall be compatible with the large end of 2.25-inch, 2.50-inch, and 2.75-inch anchor joining links and shall meet the proof and break load requirements of 2.75-inch chain (see figures 6 and 15).

3.4 Materials and manufacturing techniques. Materials and manufacturing techniques shall be as specified herein and in applicable specifications and standards, and other referenced documents. Materials not specified shall be selected by the contractor and shall be subject to all provisions of this specification. Materials shall be free of defects which adversely affect performance or serviceability of the finished product.

3.4.1 Process of steel manufacture. The steel to be used for the manufacture of chain assemblies shall be made by the open hearth, basic oxygen electric furnace, or other such process as may be specifically approved. The steel shall be produced using fine grain practice.

3.4.2 Chemical composition. The component manufacturer shall use steel that meets the specifications of SAE J404, class 1330 and 4340 (UNS G13300 and G43400) as modified in table III. The chemical composition of the steel for the component manufacture shall be determined by the steelmaker or component manufacturer on samples taken from each heat of steel in accordance with ASTM E59. Tolerance for chemical analysis shall be in accordance with ASTM A751. The chemical composition for each heat of steel shall be part of the CoC (see 4.3 and 6.7.1) from the steelmaker or component manufacturer. Table III does not include pear links, plate shackles, split keys, lead plugs, or tapered pins. Chemical composition for pear links is to be determined by the manufacturer to meet requirements of table I and submitted with test reports.

TABLE III. Chemical composition ladle analysis[2/].

	Mooring Chain Assembly Components[3/]		Swivel Shackle Pins Only[3/]	
Element	Percent		Percent	
	Min.	Max.	Min.	Max.
Carbon		0.33	0.38	0.43
Silicon	0.20	0.55	0.15	0.30
Manganese		1.90	0.60	1.90
Phosphorus		0.025		0.035
Sulphur		0.025		0.040

Downloaded from http://www.everyspec.com

TABLE III. Chemical composition ladle analysis[2/] - Continued.

	Mooring Chain Assembly Components[3/]		Swivel Shackle Pins Only[3/]	
Element	Percent		Percent	
	Min.	Max.	Min.	Max.
Nitrogen		0.015		
Chromium		0.25	0.70	0.90
Copper		0.35		
Columbium (Niobium) [1/]		0.05		
Nickel		0.40	1.65	2.00
Vanadium [1/]		0.10		
Aluminum [1/]		0.065		
Molybdenum		0.08	0.20	0.30

NOTES:

1/ At least one of these grain refining elements shall be used in enough quantity to assure a fine grain structure for chain and accessories.

2/ Table III does not include pear links, plate sinker shackles, split keys, lead plugs or tapered pins. Chemical composition for pear links is to be determined by the manufacturer to meet requirements of table I and submitted with test reports (see 3.4.2).

3/ Conforming to SAE J404, class 1330 and 4340.

3.4.3 Heat treatment. All welding shall be completed prior to heat treatment. All inspection or testing of the finished component shall take place after heat treatment. Components shall be normalized above the transformation temperature or quenched and tempered, as required, to produce a uniform fine grain structure which obtains mechanical properties to meet specifications. Welded components shall not be quenched. All heat treating equipment shall be automatically controlled and regularly checked. Temperature time charts shall be kept and be part of the CoC (see 4.3).

3.4.4 Microstructure. The grain size of each component shall be uniform throughout the cross section of the finished component. Grains shall be equal to or finer than ASTM E112 No. 6 as determined by using the comparison method at 100X magnification. Randomly dispersed grains as large as ASTM E112 No. 4 are permissible. The components shall be heat treated to refine grain size and to minimize the presence of Widmanstatten structure in the finished products (4.6.9).

3.4.5 Macrostructure. Each finished component shall be free from harmful defects such as seams, voids, flakes, shuts, cracks, porosity, nonmetallic inclusions, segregations, and centerline shrinkage (see 4.6.10).

3.4.6 Metal spray hard facing. The contact bearing surfaces between swivel sections shall be hard faced by the metal spray process. All surfaces to be faced shall be thoroughly prepared by removal of all foreign material and corrosion products. A coating of a self-fluxing metal powder composed of chromium, boron, nickel, and silicon shall be sprayed onto the prepared surfaces

Downloaded from http://www.everyspec.com

so as to produce a finished coating, after fusing, of no less than 20-mil thickness. The sprayed coating shall be fused to the base metal in accordance with the procedures recommended by the supplier of the hard facing materials. Care shall be exercised to prevent overheating during the fusing process in order to prevent running or sagging of the coating. The sprayed part shall be cooled slowly in accordance with recommendations of the metal spray supplier. The finished coating shall be of fine texture, uniform thickness, free of unatomized or unfused particles of metal, and shall have a hardness of 56 to 61 on the Rockwell C scale and a surface roughness of 250 RMS maximum.

3.5 Welded chain components. Unless otherwise specified (see 6.2), chain links shall be heated, bent, and flash butt welded (see 4.6.9.1 and figure 1a.)

3.5.1 Heating and bending. Heating of the bars prior to bending shall be controlled to prevent undue scaling, flaking, or bend ripples in the grip area. Defects may be removed and blended smooth to adjacent surfaces provided the required dimensions are maintained.

3.5.2 Bar misalignment. The transverse bar end misalignment shall not exceed 2.5 percent of the bar diameter.

3.6 Stud links. Unless otherwise specified (see 6.2), studs for stud links shall be the inserted type (see figures 1a-1, 1a-2, 1a-3). The chain studs shall be drop forged and have the same chemical and physical properties as the link. The stud shall not have lugs or protrusions and the end(s) of the stud shall be in contact with the link. The stud shall be pressed into the link body. The chemical composition for each heat of steel shall be part of the CoC.

3.6.1 Stud welding. The stud shall have a circumferential weld on the end opposite the flash weld. Welding shall be in accordance with AWS D1.1 or MIL-STD-248. Welding shall be performed prior to the heat treatment process (see 6.2 and figures 1a-1 and 1a-2).

3.7 Cast components. Unless otherwise specified (see 6.2), other components shall be cast or otherwise fabricated at the manufacturer's discretion and shall meet all requirements as specified herein.

3.7.1 Surface contour at parting lines. The contour of the surface at the parting of adjacent mold halves shall conform to the surrounding contours or be slightly positive. The surface at any point shall meet the required component dimensions.

3.7.2 Material surface. Burrs and rough edges shall be removed and made flush to adjacent contours. Components shall be free from surface cracks, dents, gas holes, aligned porosity, laps, seams, fins, or cuts.

3.8 Markings.

3.8.1 Assemblies. All accessories and the stud of the last link on each end of the 90-foot shot of chain shall bear a symbol or marking to show the contract year and serial number of the chain. Each stud and all accessories shall have permanent markings to denote chain size, manufacturer, and FM3. Components of equal size which fit a range of nominal chain sizes shall be marked with the range of sizes. Markings for manufacturer, contract year, chain size, and FM3

Downloaded from http://www.everyspec.com

shall be raised or stamped (see figures 19 and 20). Steel stamps, for serial numbers, shall have rounded characters to prevent stress concentration and have a 0.375-inch minimum, 0.75-inch maximum letter height and a 0.09-inch minimum, 0.125-inch maximum depth. The markings must be visible after coating the component and located as shown on figures 19 and 20. All stamped markings shall be covered with tape prior to coating. Serial numbers shall not be repeated for any given size component (see 4.6.12).

3.8.2 Joining links. All noninterchangeable parts of each link shall contain a common marking as shown on figure 20.

3.9 Finish. All components shall be tumbled or grit blasted as specified in SSPC No. 10 to remove scale and shall receive an undercoat of minimum 2-mil dry film thickness (dft) of zinc chromate primer conforming to TT-P-1757 and an outer coating of a minimum 2-mil dft of black asphalt conforming to TT-V-51. The last link of each shot shall be painted white with a minimum 1-mil dft with a material which will adhere to the asphalt coating and not readily wash off. All coatings shall dry a minimum of 24 hours for each coat in a temperature of 70 to 90°F at 50 percent relative humidity maximum unless otherwise specified (see 6.2).

3.10 Workmanship. All components shall be smooth, of the required form and proportions, and free of defects such as cracks, blow holes, seams, aligned porosity and laps, or cold shuts, and from imperfections that may impair serviceability (see 4.6.15).

4. QUALITY ASSURANCE PROVISIONS

4.1 Responsibility for inspection. Unless otherwise specified in the contract or purchase order, the contractor is responsible for the performance of all inspection requirements (examinations and tests) as specified herein. Except as otherwise specified in the contract or purchase order, the contractor may use his own or any other facilities suitable for the performance of the inspection requirements specified herein, unless disapproved by the Government. The Government reserves the right to perform any of the inspections set forth in this document where such inspections are deemed necessary to ensure supplies and services conform to prescribed requirements.

4.1.1 Responsibility for compliance. All items shall meet all requirements of sections 3, 4, and 5. The inspection set forth in this document shall become a part of the contractor's overall inspection system or quality program. The absence of any inspection requirements in this document shall not relieve the contractor of the responsibility of ensuring that all products or supplies submitted to the Government for acceptance comply with all requirements of the contract. Sampling inspection, as part of manufacturing operations, is an acceptable practice to ascertain conformance to requirements, however, this does not authorize submission of known defective material, either indicated or actual, nor does it commit the Government to accept defective material.

4.2 Inspection system. The supplier shall provide and maintain an inspection system and quality control program acceptable to the Government for supplies and services covered by this specification. The inspection system shall be in accordance with MIL-I-45208. All test equipment shall have been

Downloaded from http://www.everyspec.com

calibrated within the previous 12 months or less as specified by the individual ASTM test specification under ASTM E4 or an equivalent procedure.

4.3 Inspections. The examinations and tests of 4.6.1 through 4.6.14 to be performed and the number of samples are listed in table IV. Inspection lots shall be from the same heat of steel.

TABLE IV. Required inspection[1/].

Number inspected					
	Other Components		Chain		
	Number	Units	Links	Shots	
Inspection	Inspected	Represented	Inspected	Represented	Samples From
Break Load	1	25	3	4	Finished Component
Proof Load	1	1	All	1	Finished Component
Dimensions	1	25	5	1	Finished Component
Impact & Tensile	1	25	1	4	Finished Component
Brinell Hardness	1	1	3	1	Finished Component
Surface	1	1	5	1	Finished Component
Microstructure	1	25	1	4	Finished Component
Macrostructure	1	25	1	4	Finished Component
Marking	1	1	Every	Shot	Finished Component
Weight			Every	Shot	Finished Component
Inspection of Surface (section 4.6.3)	1	1	5	1	Finished Component
Swivel Test	1	1	N/A		Finished Component
Preservation and packaging	Every Shipment		Every Shipment		N/A

NOTES:

1/ All finished components shall be tested before the protective coating is applied to the steel. All test specimens shall be free of any coating, and swept, sand blasted, or cleaned by some other specially approved means.

4.4 Government representative. The Government may send a representative to the plant to ensure all provisions, examinations, tests and inspections of the specification are being properly implemented. The representative can be present at tests, manufacturing, inspections, and examinations, and can examine mill certificates for each heat or melt of steel and examine the calibration records of test machines and other process control devices. The contractor shall furnish a test schedule, which shall be updated every 2 weeks, to the Government representative.

4.5 Preparation for inspection.

4.5.1 Specimens. Prior to inspection, all specimens shall be swept clean by sand blasting to SSPC-SP-10 or equivalent means to allow proper examination and testing. Specimens are to be taken, as specified in table IV, from finished components, that were heat treated, worked, and reduced (where applicable) from the same size and type as the component represented.

4.6. Examinations and tests.

Downloaded from http://www.everyspec.com

4.6.1 Break test. A test specimen shall be taken from finished components as specified in table IV. Specimens of chain shall be manufactured at the same time as the chain and attached so that the three links will be heat treated with the shot of chain. The accessories test specimens shall be selected at random from finished components in the required number from the same heat treatment, size, and type. If there is no sign of fracture after application of the required load given in 3.3.1 and table II, the specimen passed the test. If the chain specimen fails, one additional specimen may be cut out of the same length of chain at a point adjacent to where the first specimen was taken. If the second test fails, the represented shots shall be rejected. If the accessories specimen fails, the 25 accessories shall be rejected. All components fitting a range of sizes shall be loaded to the highest applicable nominal chain size load. The plate sinker shackle with its bolts shall be tested separately from other components.

4.6.2 Proof test. All components shall withstand the applicable proof load given in 3.3.1 and table II. For chain testing, if one link fails, the shot shall be rejected. All components fitting a range of sizes shall be loaded to the highest applicable nominal chain size load. After proof-loading, the length of chain shall be measured at a load of 10 percent of the specified proof-load and shall meet the requirements of table V for five-link sections, or be rejected. Two five-link measurements shall be taken three links in from the end of each shot and shall be recorded in the test reports and identified with the respective shot. In the five-link check, the first five links shall be measured. Then for the next set of five links, two links from the previous five links shall be included. This procedure shall be followed throughout the entire length of chain. The weight of each shot shall be as specified in table II or the shot shall be rejected. The plate sinker shackle and its bolts shall be tested separately from the other components.

TABLE V. Length over any five links with 10 percent of the proof load applied.

Nominal Diameter (inches)	Chain Length Over Five Links	
	Minimum (inches)	Maximum (inches)
1.75	38.5	39.45
2	44	45.1
2.25	49.5	50.75
2.50	55	56.4
2.75	60.5	62
3	66	67.65
3.50	77	78.95
4	88	90.2

4.6.3 Dimensions and inspection of surface. After the proof test, five nonadjacent links per shot and all accessories shall be visually examined for surface defects. Each component shall be within the specified dimensions. Any surface defect such as cracks, dents, and cuts shall be ground down by a means which prevents heating of the component (burn marks shall be cause for rejection) to a maximum of 0.063 inch. In addition, for cast components a negative tolerance or line of reentry shall cause rejection of the component. All test specimens shall be examined for correct marking. If any of the above criteria are not met, the component shall be rejected.

Downloaded from http://www.everyspec.com

4.6.4 Swivel test. A test shall be conducted on every swivel. The test will determine the ability of a swivel to rotate. While suspended from the small end and hanging with the weight equivalent to one shot of its associated largest chain size, the swivel shall rotate one revolution with the maximum torque of the applicable chain size (in inches) calculated at 100 foot pounds torque per inch of nominal chain size as follows: [nominal chain size (diameter in inches) multiplied by 100 foot pounds torque] => d(100) = torque in foot pounds. Failure of the swivel to rotate one revolution with the applied torque shall be cause for rejection of the swivel, make note of torque that was required to rotate the swivel. The required torque for the test shall be recorded as part of the CoC. Surface hardness shall be tested in accordance with ASTM A370, and recorded on the test report. Failure to pass the surface hardness test shall result in rejection (see 3.3.7).

4.6.5 Impact test. Test samples, as stated in table IV, shall be made from finished components, and heat treated the same as the finished components it represents. All test samples shall have three test specimens. Forged chain shall have three test specimens with the Charpy V-Notch at the center of the weld, and three test specimens opposite the flashweld. Accessories shall have three test specimens. Impact tests shall be the Charpy V-Notch type as described in ASTM A370. The orientation of the impact specimens is shown on figure 17. The test shall be conducted at 32°F. If the average fails to meet the minimum requirement of table I by an amount not exceeding 15 percent, three additional specimens from the same bar stock may be tested and the results added to those previously obtained to form a new average. If the new average fails to meet the requirements of table I, the represented components shall be rejected. No individual Charpy values shall be less than 75 percent of the average minimum requirement.

4.6.6 Tensile test. Test samples, as stated in table IV, shall be from finished components and heat treated the same as the finished component it represents. The test specimen shall come from the unwelded side (if applicable). One test sample or test coupon for every heat shall be made. Tensile test specimens may be either the full bar section or the round type machine in accordance with ASTM A370. The position of the test specimen relative to the test sample cross section are to be taken as shown on figure 18. The results of the test shall meet or exceed the minimum requirements listed in table I. If the original test fails to meet the requirements in table I but is within 2,000 pounds per square inch (psi) of the required tensile strength, or within 2 percent of the required elongation or reduction of area, a retest of another specimen selected from the same heat is permissible. If the second test fails to meet the requirements of table I, the represented components shall be rejected.

4.6.7 Brinell hardness. Two Brinell hardness tests shall be conducted in accordance with ASTM E10, one on the tensile specimen and one at the locations shown on figures 13, 14, 15, and 16. Prior to testing, the surface (at the test location) shall be prepared by grinding it down 0.030 inch while leaving no visible burn marks. Three links with at least 10 feet between test links per shot, and every other component shall be tested. Failure to meet requirements in table I shall be cause for rejection of the component.

4.6.8 Surface test. Magnetic particle or liquid dye penetrant inspection shall be employed to examine the finished component. Five nonadjacent links per

Downloaded from http://www.everyspec.com

shot and every other component shall be 100 percent tested. Procedures and equipment shall be used in compliance with MIL-STD-271. The results of these tests shall be compared with MIL-STD-2035. Failure to meet these specifications shall be cause for rejection of the represented components.

4.6.9 Microstructure examination.

4.6.9.1 Fusion weldzone of chain and components. A test specimen, as stated in table IV, for chain and other components shall be prepared and visually inspected in accordance with ASTM E3. A sample of material shall be taken parallel with the length of the component, traversing the fusion zone. The fusion zone shall be located by acid etching, and a microstructure examination shall be performed. Evidence of any fissures, microcracks, porosity, oxides, inclusion, and unfused areas shall be cause for rejection of the represented components (see 3.4.4 and 3.5).

4.6.9.2 Microstructure examination in other areas of components. A test specimen, as stated in table IV, shall be prepared and etched according to the metallographic procedure recommended in ASTM E3 and E407. If grain size exceeds the limits of ASTM E112 No. 6, using the comparison method at 100X magnification, the represented components shall be rejected. However, randomly dispersed grains as large as ASTM E112 No. 4 are permissible. Test specimens are to be taken from locations shown on figures 13, 14, 15, and 16 (see 3.4.4).

4.6.10 Macrostructure examination. For both cast and forged components, a test specimen shall be prepared in accordance with ASTM E3. Specimens shall be taken in the weld area and high stress area. All samples shall be etched in accordance with ASTM E340 and tested in accordance with ASTM E381. The test specimen must meet the requirements of MIL-STD-1265, radiographic Grade C or the represented components shall be rejected. Cast swivel shackles and spider plates shall be 100 percent radiographically inspected from the location shown on figures 14 and 15. Other cast component specimens shall be 100 percent radiographically inspected. Test specimens shall be taken from the finished product as given in table IV and shall meet the requirements of 3.4.5.

4.6.11 Assembly test. All joining links shall be disassembled after the specified proof load, examined for any defects and sharp corners, and then reassembled. Any joining links which have sharp corners, defects, or cannot be disassembled and reassembled after the proof load shall be rejected. Inspection of the tapered pins shall be conducted for any surface deformations after the proof loading. If any defects are found, the tapered pin shall be replaced with a new one. Lead plugs shall fill the cavity flush to the exterior surface after being expanded by hammering. Split keys and tapered pins shall fit properly (see 3.3.4). Proper mating of components to the swivel shall be determined (see 3.3.7). Shackle pins shall fit properly (see 3.3.7.2).

4.6.12 Marking. Marking shall be inspected for conformance with 3.8 through 3.8.2.

4.6.13 Preservation and packaging inspection. On every shipment, a check shall be made to verify that all components are properly identified, packaged, and preserved, in accordance with section 5.

4.6.14 Finish. Inspect finish to determine compliance with 3.9.

Downloaded from http://www.everyspec.com

4.6.15 Workmanship. Inspect workmanship to determine compliance with 3.10.

4.7 End item inspection requirements. Government acceptance shall be dependent on successful completion of the inspection (see 6.7.2).

4.8 Disposition of chain specimens. Unless otherwise specified (see 6.2) all mooring assembly component break test specimens shall be retained at the manufacturing facility until completion of the contract, at which time all specimens are to be destroyed.

5. PACKAGING

5.1 Packing. Shots of chain shall be bundled for lifting using wire rope slings supplied by the contractor with each shot of chain. The breaking strength of the wire rope used for the sling shall be at least five times the weight of the shot of chain to be lifted. The wire rope eye slings shall be passed through links of the chain. Secure each end of the sling below the eyes with at least three wire rope clips of the appropriate size for wire up to 5/8-inch diameter, and four clips for larger diameter wire. The hanging length of each bundle shall not exceed 15 feet. Miscellaneous components shall be bundled for lifting in the same manner. Such bundles shall consist of like items of the same size. Lead plugs and spare tapered pins for the joining links or shackles shall be packed separately in steel containers and marked to permit ready identification of the type, size, quantity, manufacturer, and year produced (see figure 21).

5.2 Marking. Each bundle of chain and other components shall be marked for shipment in accordance with MIL-STD-129. The required data shall be stamped on a metal tag or plate firmly attached to each bundle.

6. NOTES

(This section contains information of a general or explanatory nature that may be helpful, but is not mandatory.)

6.1 Intended use. The mooring chain assembly is intended for mooring sea going vessels in a moth ball state for up to 15 years as well as other interim uses.

6.1.1 Assembly dimensions. The assembly sizes are 1-3/4, 2, 2-1/4, 2-1/2, 2-3/4, 3, 3-1/2, and 4 inches. The chain, which should be of the stud link type, should be procured in lengths of 90 feet. All components should meet the dimensions and tolerances given on figures 1a through 12.

6.2 Acquisition requirements. Acquisition documents should specify the following:

a. Title, number, and date of this specification and PIN.
b. Nominal diameter.
c. Issue of DODISS to be cited in the solicitation, and if required, the specific issue of individual documents referenced (see 2.1.1 and 2.2).
d. Component types for chain shots, specify either with enlarged link and end link at each end or all common links.
e. Quantity of each type of component.

Downloaded from http://www.everyspec.com

f. With or without chain studs modified for cathodic protection (Type 1 or Type 2) (see 3.1.2, 3.1.3, 3.3.6).
g. Fabrication drawings required (see 3.2).
h. When extra tapered pins, split keys, and lead plugs are required (see 3.3.4).
i. Method for retaining swivel shaft in the shackle body (see 3.3.7).
j. Shackle pin clearance if different (see 3.3.7.2).
k. Welded components if different (see 3.5).
l. Chain studs if different (see 3.6).
m. Cast components if different (see 3.7).
n. Dry film thickness if different (see 3.9).
o. Certification and documentation required (see 3.4.2, 3.4.3, 4.1.1).
p. Disposition of test specimens if different (see 4.8).
q. Add note on hazardous materials (see 6.5)

6.2.1 PIN. A PIN has been established to facilitate procurement of a mixture of components by a self-constructed part ordering number (see 1.2.2).

```
M18925-I-2-2
   |   | | |_______________Chain size (2 inch).
   |   | |
   |   | |_________________Type (type 2, chain link without cathodic
   |   |                    protection).
   |   |
   |   |___________________Group (group I).
   |
   |_________________________Military specification designator.
```

6.3 Definitions.

Chain Assembly - Consists of the riser and ground leg subassemblies which contain all of the chain, connecting links, and other mooring material (except buoys, anodes, and anchors) which comprise a fleet mooring.

Compatibility - When mated, components shall provide sufficient clearance for assemblies and proper grip area for each component.

Component - Any part of the mooring chain assembly such as a shot of chain, detachable link, ground ring, etc.

Eye Sling - Section of wire rope with an eye splice at both ends.

Grip Area - The surface of the component subjected to wear and loading from the mating component.

Ground Leg Subassembly - Typically, 18 shots of chain, 8 anchor joining links, 25 detachable joining links, and 3 swivels (includes spares).

Nominal Diameter - The associated chain size in which the loading criteria applies.

Downloaded from http://www.everyspec.com

Riser Subassembly - Typically, one shot of chain, three anchor joining links, three detachable joining links, one swivel, and one ground ring (including spares).

Shot - 90 feet of chain which shall contain common links with an enlarged link and end link at each end or all common links as specified by the Contracting Officer.

6.4 Subject term (key word) listing.

Chain assembly
Lead
Mooring chain
Zinc chromate

6.5 Hazardous and toxic materials. Material Safety Data Sheets prepared in accordance with FED-STD-313 are required for all hazardous materials. Include the following note to the contract:

Note:

Caution should be taken during any plating, cleaning, descaling, passivation, or similar process. The contractor shall be responsible for the safe reutilization and disposal of all material generated by these processes in accordance with ASTM A380, sections 8.2 and 8.7.

6.6 Changes from previous issue. Marginal notations are not used in this revision to identify changes with respect to the previous issue due to the extensiveness of the changes.

6.7 Reports.

6.7.1 Certificate of compliance. Reports submitted to the Government shall include a manufacturer's statement of conformance in accordance with the contract. The suppliers Quality Assurance, and Quality Control (QA/QC) Inspector will sign each report as required and the Government Quality Assurance Representative (QAR) will sign the statement of conformance and any reports as applicable. As a minimum and prior to shipment of material from the manufacturer, certification documentation (Certificate of Compliance) for each component should be provided. The following information should be provided in addition to the manufacturer's statement to its conformance to all contractual requirements:

a. Manufacturer's serial number.
b. Chemical composition, head number, processes, examinations, and tests with dates executed, as required in 3.2, 3.3, 3.4.2, 3.4.3, 4.6.1, 4.6.2, 4.6.3, 4.6.4, 4.6.5, 4.6.6, 4.6.7, 4.6.8, 4.6.9, 4.6.10, 4.6.11, 4.6.12, 4.6.13, 4.6.14, 4.8.
c. Testing machines used to verify conformance including serial numbers, manufacturer, and date of calibration.
d. Contract line item number and component identification and quantity.
e. Heat treatment temperature-time charts.
f. Signatures of both the Government site representatives and contractor quality assurance personnel for the witnessed tests and required examinations, and review of the CoC package.

Downloaded from http://www.everyspec.com

6.7.2 End item report. An End Item Inspection Report (EIIR), and a Defective Product Report (DPR), as appropriate, are to be prepared (see 4.7) prior to government acceptance of the order. The format is to be as indicated in Appendix A to this specification.

Custodians:
Army - ME
Navy - YD

Review Activities:
Navy - SH
DLA - IS

Preparing Activity:
Navy - YD

(Project 4010-0188)

Downloaded from http://www.everyspec.com

APPENDIX A

PROCEDURE FOR PREPARING THE END ITEM INSPECTION REPORT AND THE DEFECTIVE PRODUCT REPORT

10. SCOPE

10.1 Scope. This appendix details the format for preparing the End Item Inspection Report (EIIR) and a Defective Product Report (DPR) in connection with the use of MIL-C-18295E. This Appendix is not a mandatory part of the specification. The information contained herein is intended for guidance only.

20. APPLICABLE DOCUMENTS

This section is not applicable to this appendix.

30. SUBMISSION

30.1 Format and content.

30.1.1 EIIR Report. The EIIR report should be prepared prior to the final acceptance of an order on the contract by the Government. The EIIR report will be retained by the Government as permanent record. The format and content should be the same and in the same order as shown to provide for continuity.

30.1.2 Defective Product Report. When a defective product is identified, the DPR should be prepared for submittal by the contracting officer prior to final acceptance of the order on the contract by the Government.

30.2 Package of forms. The package of forms consists of a cover page (NAVFAC No. 100) for the EIIR (NAVFAC No. 100A, 3 pages) and DPR (NAVFAC No. 101, 1 page).

Downloaded from http://www.everyspec.com

APPENDIX A

END ITEM INSPECTION REPORT

CONTRACT NO._____

DWG. NO._____ REVISION_____ DATE_____

THIS EIIR PROVIDES A CHECKLIST FOR THE MINIMUM INSPECTION REQUIREMENTS TO BE PERFORMED ON EACH ITEM PRODUCED BY THE SUPPLIER. IT SHALL SERVE AS AN INSPECTION RECORD FOR EACH ITEM. THE INSPECTION REQUIREMENTS HEREIN DO NOT RELIEVE THE SUPPLIER OF ANY OTHER CONTRACT REQUIREMENTS NOR DOES IT WAIVE THE GOVERNMENTS RIGHT TO REQUIRE ADDITIONAL INSPECTION FOR DETERMINING CONFORMANCE TO OTHER REQUIREMENTS. ACCEPTANCE BY THE SUPPLIER'S INSPECTOR DOES NOT CONSTITUTE FINAL ACCEPTANCE BY THE GOVERNMENT.

FOR UNACCEPTABLE ITEMS, SUBMIT DEFECTIVE PRODUCT REPORT (NAVFAC Form No.101).

NAVFAC Form No. 100

Downloaded from http://www.everyspec.com

APPENDIX A

DEFECTIVE PRODUCT REPORT

CONTRACT NO._____

ORIGINATOR NAME AND ADDRESS:

_____

DRAWING NO._____REVISION_____DATE_____

PART DESCRIPTION_____QTY_____

SER.NO._____

_____

DESCRIPTION OF DEFICIENCY:

_____

DISPOSITION:

SUBMITTING ACTIVITY AUTHORITY SIGNATURE	TITLE

APPROVED	WAIVED	DISAPPROVED

NAVAL FACILITIES ENGINEERING COMMAND SIGNATURE	DATE

NAVFAC FORM No.101

Downloaded from http://www.everyspec.com

(All dimensions in Inches)

Nominal Chain Size (d) (in)	A (min)	A (max)	B (min)	C (min)	C (max)	E (min)	E (max)	F (min)	G (min)	H (max)
1 3/4	10.50	10.76	2.62	1.75	1.79	6.21	6.39	1.50	1.41	1.58
2	12.00	12.30	3.00	2.00	2.05	7.10	7.30	1.65	1.59	1.77
2 1/4	13.50	13.84	3.42	2.25	2.31	8.04	8.21	1.80	1.59	2.09
2 1/2	15.00	15.38	3.76	2.50	2.56	8.88	9.13	1.95	1.64	2.23
2 3/4	16.50	16.91	4.12	2.75	2.82	9.76	10.04	2.10	1.80	2.48
3	18.00	18.45	4.49	3.00	3.08	10.65	10.95	2.25	1.94	2.62
3 1/2	21.00	21.53	5.25	3.50	3.59	12.43	12.78	2.40	2.38	3.12
4	24.00	24.60	6.20	4.00	4.10	14.40	14.60	2.70	2.58	3.58

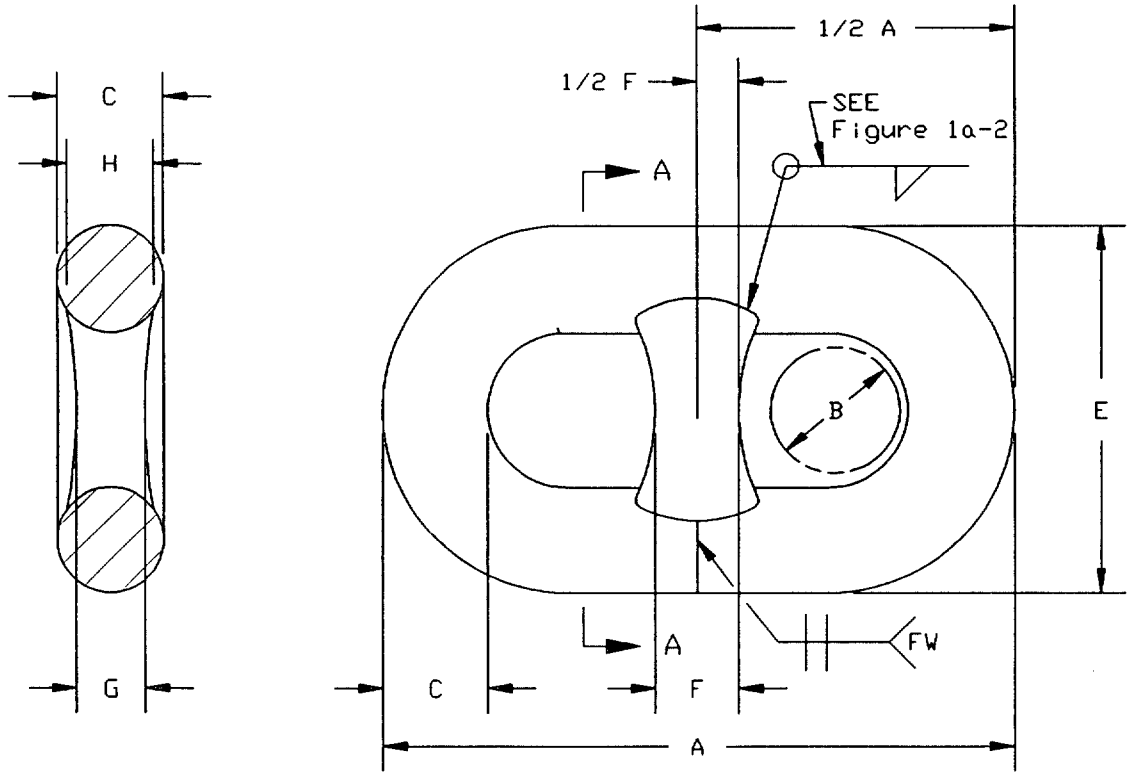

FIGURE 1a-1 Common stud link chain.

Downloaded from http://www.everyspec.com

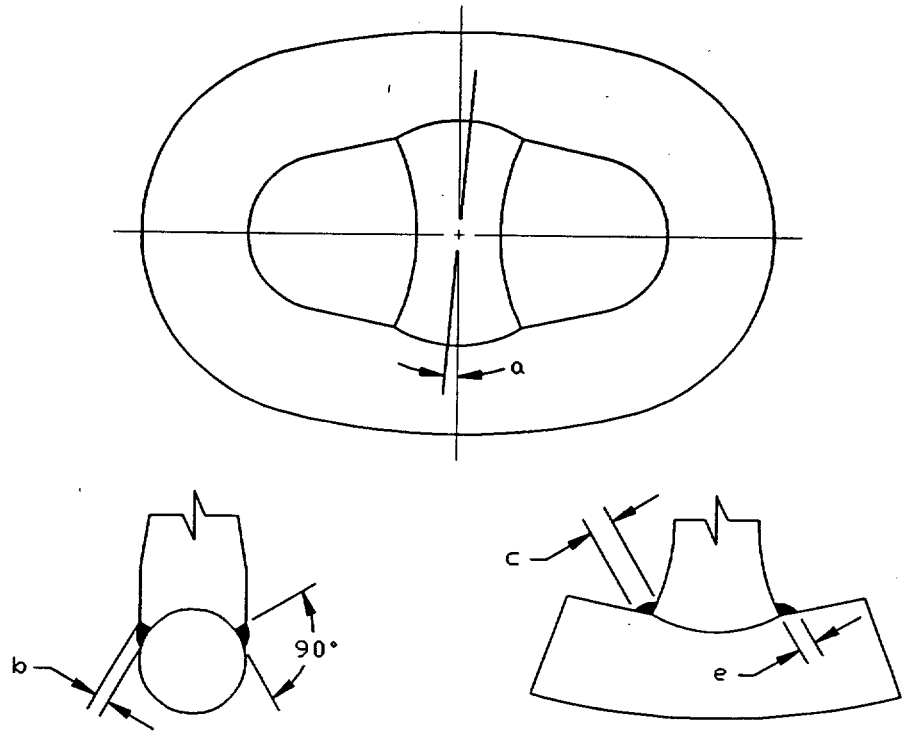

(Stud weldment opposite side of flash weld)

STUD WELDMENT

DIMENSION DESIGNATION	NOMINAL DIMENSION	TOLERANCE	
		MINUS	PLUS
a	0°	4°	4°
b	0.10d	0.10d	
c	0.20d	0.20d	
e	0.09d	0.01D	

d = NOMINAL DIAMETER OF BARSTOCK

WELDMENT DIMENSIONS AND TOLERANCES

FIGURE 1a-2. Common stud link chain (cont'd).

Downloaded from http://www.everyspec.com

Nominal Chain Size (d) (in)	Minimum Full Thread Depth, "X" (in)	Maximum Hole Depth, "Y" (in)
1 3/4	0.625	0.812
2	0.75	0.914
2 1/4	0.75	0.914
2 1/2	0.75	0.914
2 3/4	0.75	0.914
3	0.75	0.914
3 1/2	0.75	0.914
4	0.75	0.914

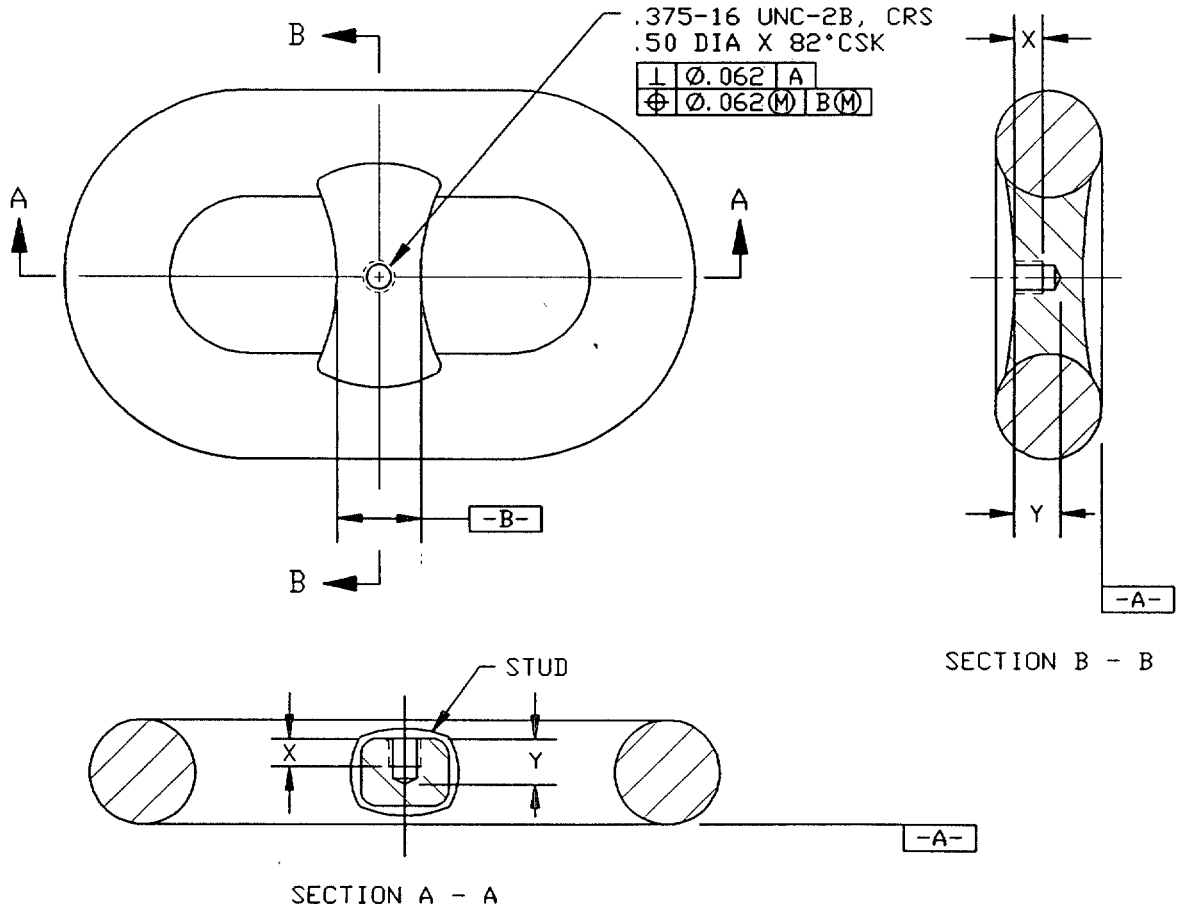

FIGURE 1b. Anode mounting hole (Type 1 chain).

Downloaded from http://www.everyspec.com

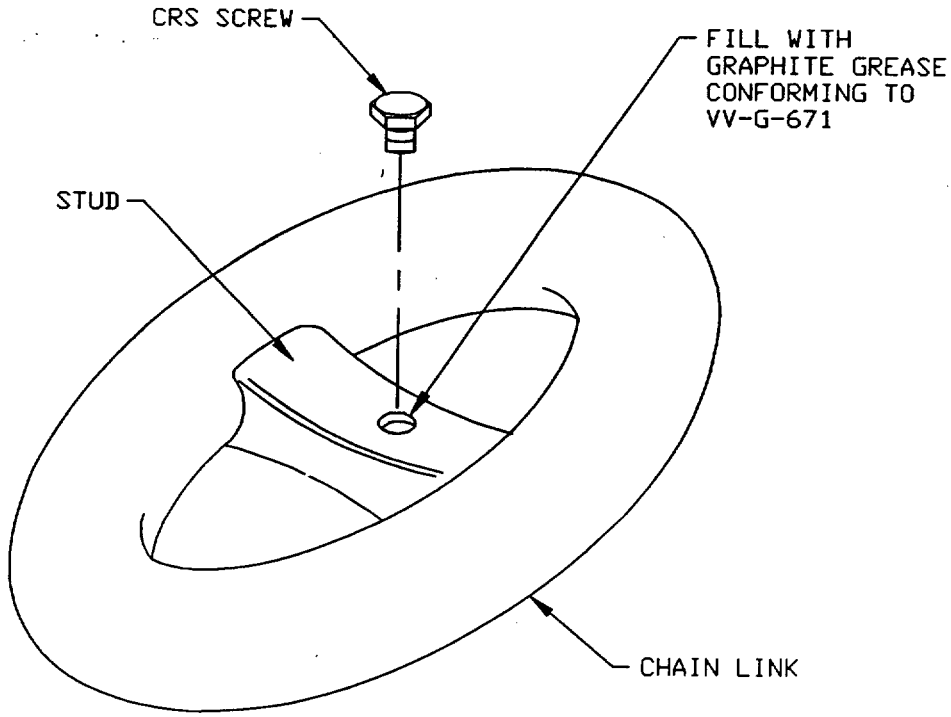

FIGURE 1c. CRS screw (Type 1 chain).

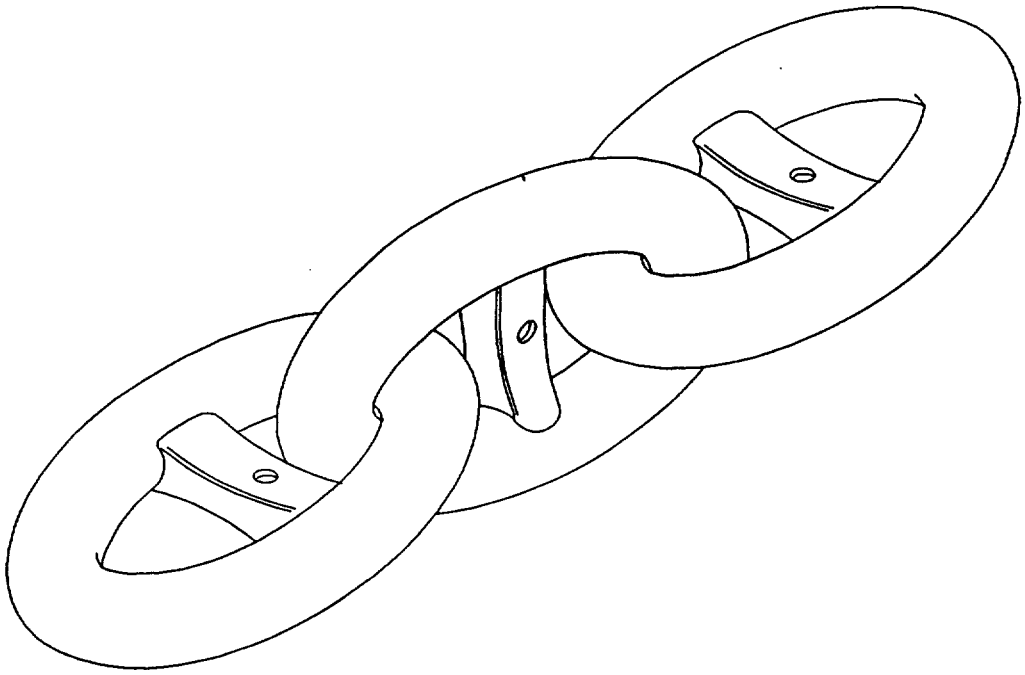

FIGURE 1d. Orientation of anode mounting hole (Type 1 chain).

Downloaded from http://www.everyspec.com

(All dimensions in Inches)

Nominal Chain Size (d) (in)	A (min)	A (max)	B (min)	B (max)	C (min)	C (max)	D (min)	D (max)	E (min)	E (max)	F (min)	F (max)	G (min)	G (max)
1 3/4	11.97	12.03	7.72	7.78	2.33	2.61	1.97	2.03	2.34	2.47	2.47	2.53	1.30	1.33
2	13.47	13.53	8.69	8.75	2.61	2.95	2.22	2.28	2.65	2.78	2.78	2.84	1.45	1.51
2 1/4	14.97	15.03	9.65	9.72	2.90	3.28	2.47	2.53	2.91	3.06	3.06	3.12	1.64	1.67
2 1/2	16.47	16.53	10.78	10.84	3.59	4.03	2.84	2.90	3.25	3.30	3.44	3.50	1.80	1.83
2 3/4	18.34	18.41	11.98	12.03	3.97	4.47	3.16	3.22	3.34	3.40	3.81	3.87	1.89	1.92
3	19.72	19.78	12.84	12.91	4.38	4.62	3.34	3.40	3.47	3.63	4.06	4.17	2.11	2.18
3 1/2	23.22	23.28	14.97	15.03	4.67	5.26	3.84	3.90	4.58	4.72	4.72	4.78	2.61	2.64
4	25.40	25.60	17.34	17.40	6.33	6.67	4.34	4.40	5.22	5.38	5.84	5.91	2.87	2.91

Notes:

1. For dovetail and pin dimension see Figure 5b.
2. All chain joining links must be compatible with the common stud link of the same nominal size.
3. Draft angle between 3° and 10°.

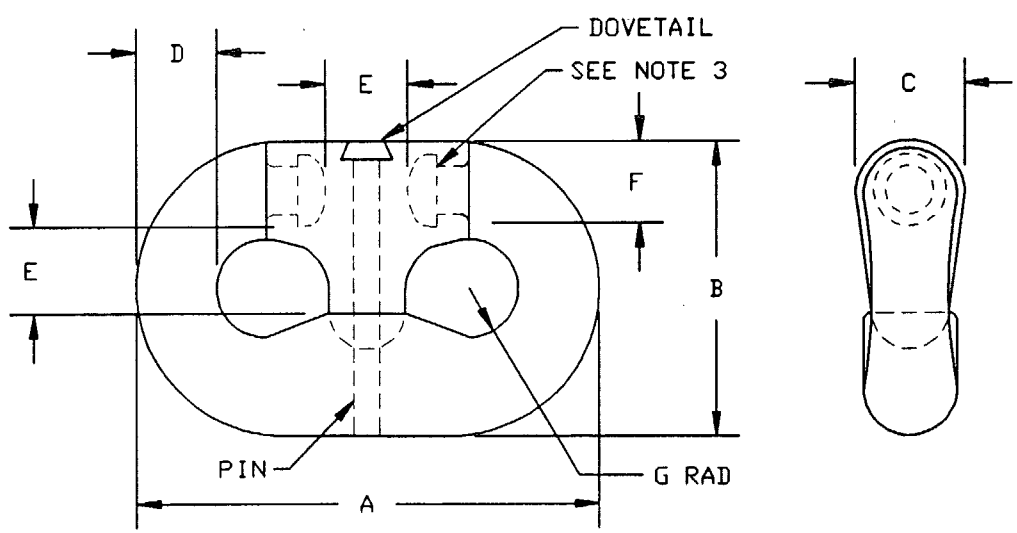

FIGURE 2. Chain joining link.

Downloaded from http://www.everyspec.com

(All dimensions in Inches)

Nominal Chain Size (d) (in)	A (min)	A (max)	B (min)	B (max)	C (min)	C (max)	D (min)	D (max)	H (min)	H (max)	J (min)	J (max)
1 3/4	1.97	2.03	14.84	14.90	10.22	10.28	3.00	3.18	3.91	3.97	2.05	2.08
2	2.34	2.41	17.84	17.90	12.28	12.34	3.62	3.86	4.72	4.78	2.51	2.54
2 1/4	3.09	3.15	22.09	22.15	14.78	14.84	4.75	5.03	5.84	5.91	2.98	3.01
2 1/2	3.09	3.15	22.09	22.15	14.78	14.84	4.75	5.03	5.84	5.91	2.98	3.01
2 3/4	3.09	3.15	22.09	22.15	14.78	14.84	4.75	5.03	5.84	5.91	2.98	3.01
3	3.59	3.66	25.72	25.78	16.47	16.53	5.25	5.57	6.06	6.17	3.11	3.14
3 1/2	3.59	3.66	25.72	25.78	16.47	16.53	5.25	5.57	6.06	6.17	3.11	3.14
4	4.87	5.12	36.77	37.23	23.75	24.25	7.87	8.12	7.87	8.12	4.25	4.50

Nominal Chain Size (d) (in)	N (min)	N (max)	R (min)	R (max)	T (min)	T (max)	V (min)	V (max)
1 3/4	2.47	2.53	1.23	1.26	2.22 x 2.34	2.38 x 2.41	2.87	2.94
2	2.97	3.03	1.45	1.48	2.41 x 2.84	2.47 x 2.91	3.44	3.50
2 1/4	3.72	3.78	1.89	1.92	3.09 x 3.34	3.15 x 3.41	4.34	4.41
2 1/2	3.72	3.78	1.89	1.92	3.09 x 3.34	3.15 x 3.41	4.34	4.41
2 3/4	3.72	3.78	1.89	1.92	3.09 x 3.34	3.15 x 3.41	4.34	4.41
3	4.67	5.06	2.11	2.14	3.97 x 4.34	4.03 x 4.41	5.09 x 5.22	5.16 x 5.28
3 1/2	4.67	5.06	2.11	2.14	3.97 x 4.34	4.03 x 4.41	5.09 x 5.22	5.16 x 5.28
4	6.68	7.06	2.95	3.06	6.00	6.16	7.68	8.06

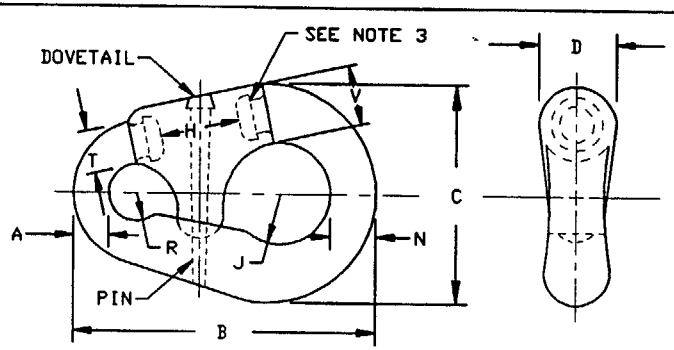

Note:

1. All anchor joining links must fit the common stud link and the ground ring of the same nominal size.

2. For dovetail and pin dimension see Figure 5b.

3. Draft angle between 3° and 10°.

FIGURE 3. Anchor joining link.

Downloaded from http://www.everyspec.com

(All dimensions in Inches)

Nominal Chain Size (d) (in)	A (min)	A (max)	B (min)	B (max)
1 3/4	3.41	3.59	8.78	9.23
2	3.66	3.84	10.24	10.76
2 1/4	5.25	5.50	11.70	12.30
2 1/2	5.25	5.50	11.70	12.30
2 3/4	5.25	5.50	11.70	12.30
3	5.50	5.75	13.16	13.84
3 1/2	5.75	6.00	13.16	13.84
4	7.31	7.69	19.00	19.95

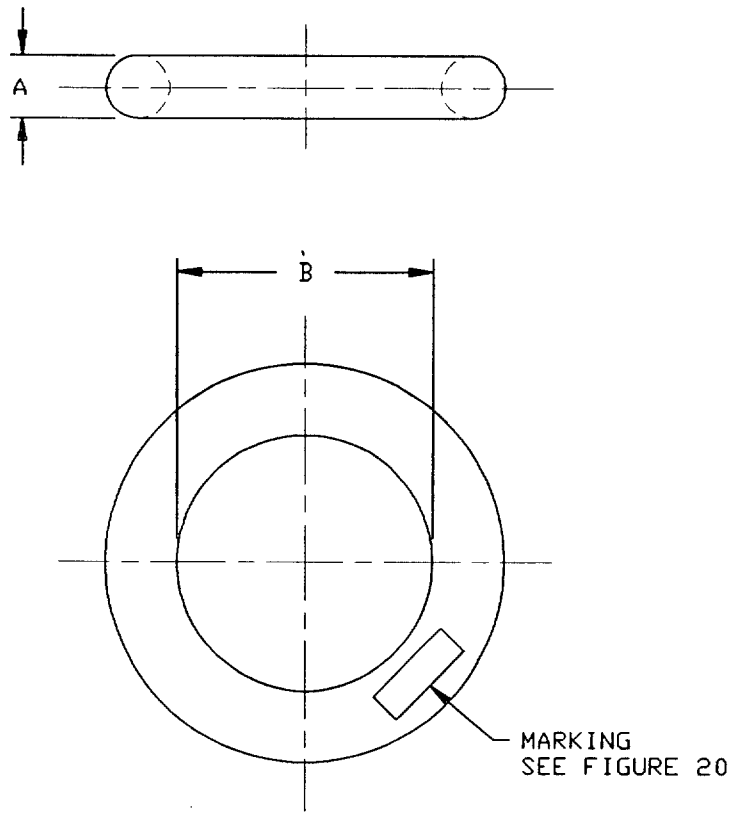

FIGURE 4. Ground ring.

Downloaded from http://www.everyspec.com

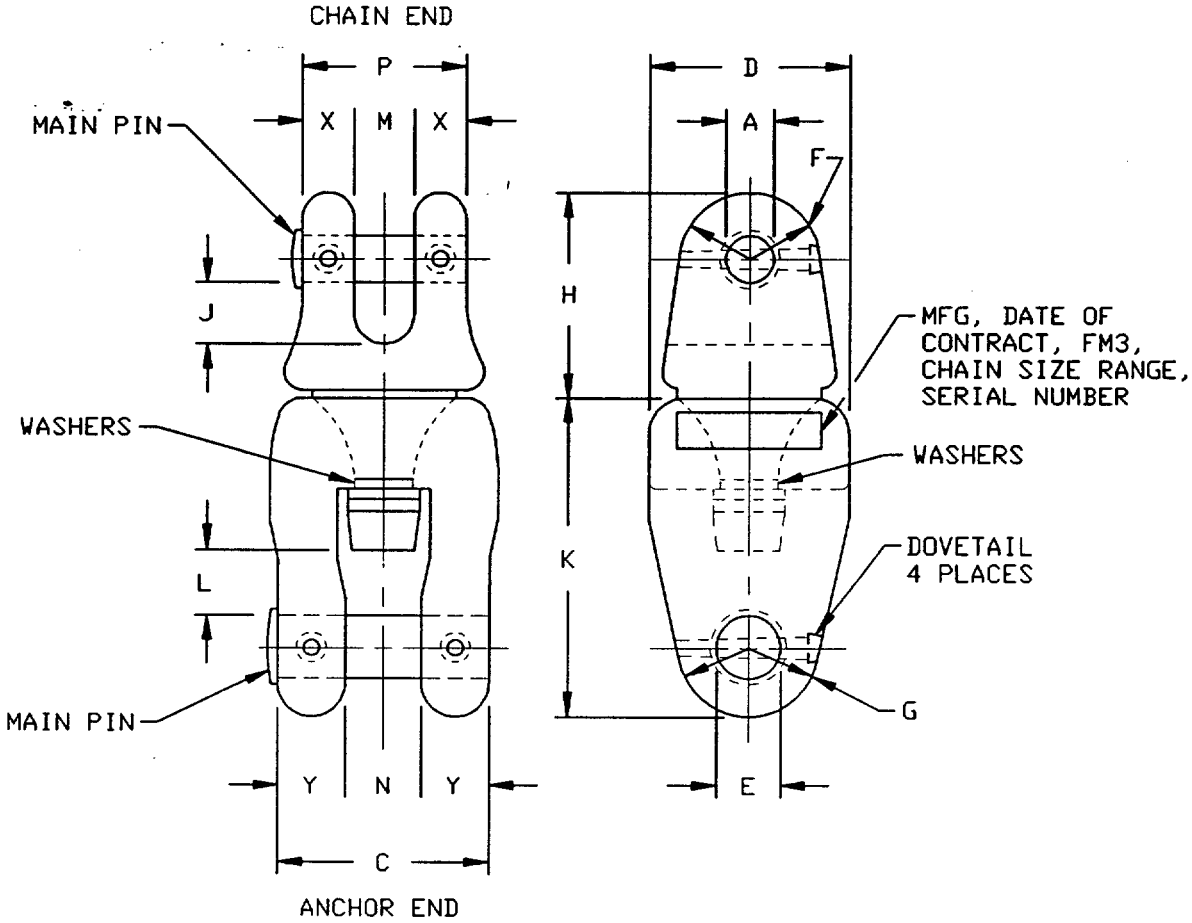

Notes:

1. Eye for A & E pins: (1.048)A, (1.048)E.

2. F & G radii from the outer edge of dovetail to the outer edge of pin on opposite end.

3. Calculate dimensions by multiplying nominal chain size by the indicated factor (d=nominal chain size).

4. Dimensions are minimum, calculated as follows:

Dimension	Factor	Dimension	Factor
A	1.4d	K	8.65d
C	5d	L	1.9d
D	3.8d	M	1.4d
E	1.6d	N	2.2d
F	0.8d + A/2	P	4d
G	1.05d + E/2	X	1.3d
H	5.15d	Y	1.4d
J	1.6d		

5. Dimensions are specified on FIGURE 5a.

6. Maximum dimensions shall permit mating of components and allow for free movement (see 3.3.7).

FIGURE 5. Swivel shackle detail.

Downloaded from http://www.everyspec.com

All dimensions in inches are minimum.

Nominal Chain Size (d) (in)	A 1.4d	C 5d	D 3.8d	E 1.6d	F .8d + A/2	G 1.05d + E/2	H 5.15d	J 1.6d
1 3/4	2.45	8.75	6.65	2.80	2.625	3.24	9.00	2.80
2	2.80	10.00	7.60	3.20	3.00	3.70	10.30	3.20
2 1/4	3.15	11.25	8.55	3.60	3.375	4.16	11.60	3.60
2 1/2	3.50	12.50	9.50	4.00	3.75	4.63	12.87	4.00
2 3/4	3.85	13.75	10.45	4.40	4.125	5.09	14.16	4.40
3	4.20	15.00	11.40	4.80	4.50	5.55	15.45	4.80
3 1/2	4.90	17.50	13.30	5.60	5.25	6.48	18.00	5.60
4	5.60	20.00	15.20	6.40	6.00	7.40	20.60	6.40

Nominal Chain Size (d) (in)	K 8.65d	L 1.9d	M 1.4d	N 2.2d	P 4d	X 1.3d	Y 1.4d
1 3/4	15.14	3.33	2.45	3.85	7.00	2.28	2.45
2	17.30	3.80	2.80	4.40	8.00	2.60	2.80
2 1/4	19.50	4.28	3.15	4.95	9.00	2.93	3.15
2 1/2	21.63	4.75	3.50	5.50	10.00	3.25	3.50
2 3/4	23.79	5.23	3.85	6.05	11.00	3.58	3.85
3	25.95	5.70	4.20	6.60	12.00	3.90	4.20
3 1/2	30.28	6.65	4.90	7.70	14.00	4.55	4.90
4	34.60	7.60	5.60	8.80	16.00	5.20	5.60

Note:

1. Eye for A & E pins: (1.048)A, (1.048)E.

Tolerances								
Dimension	Plus	Minus	Dimension	Plus	Minus	Dimension	Plus	Minus
A	.065d	None	G	.090d	None	M	.07d	None
C	.285d	None	H	As required		N	.07d	None
D	.30d	None	J	.065d	None	P	.20d	None
E	.065d	None	K	As required		X	.065d	None
F	.083d	None	L	.065d	None	Y	.065d	None

FIGURE 5a. Swivel shackle details.

Downloaded from http://www.everyspec.com

Taper pin and dovetail dimensions are for all components requiring same (dimensions are minimum)

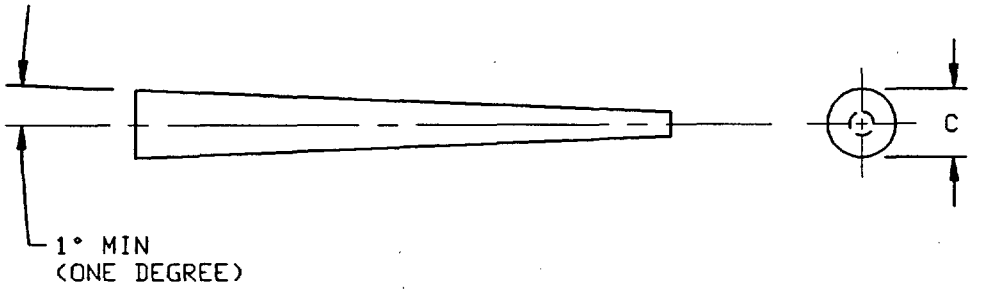

TAPER PINS

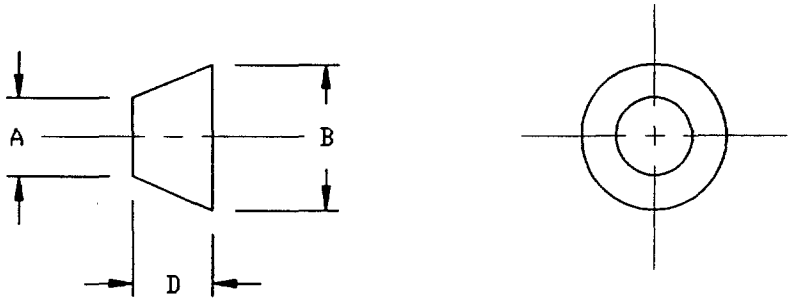

DOVETAIL CHAMBER

DIMENSIONS:

A. EQUALS LARGE END DIAMETER OF PIN AT C
B. 2 TIMES DIMENSION A
C. TAPER PIN LARGE END DIAMETER = 0.30 OF CHAIN SIZE THE COMPONENT IS DESIGNED AS. PIN TO FIT IN INTENDED HOLE WITH INTERFERENCE FIT AS SPECIFIED IN ASME B4.1
D. 1.12 TIMES DIMENSION A

FIGURE 5b. Riser swivel shackle taper pin & dovetails.

Downloaded from http://www.everyspec.com

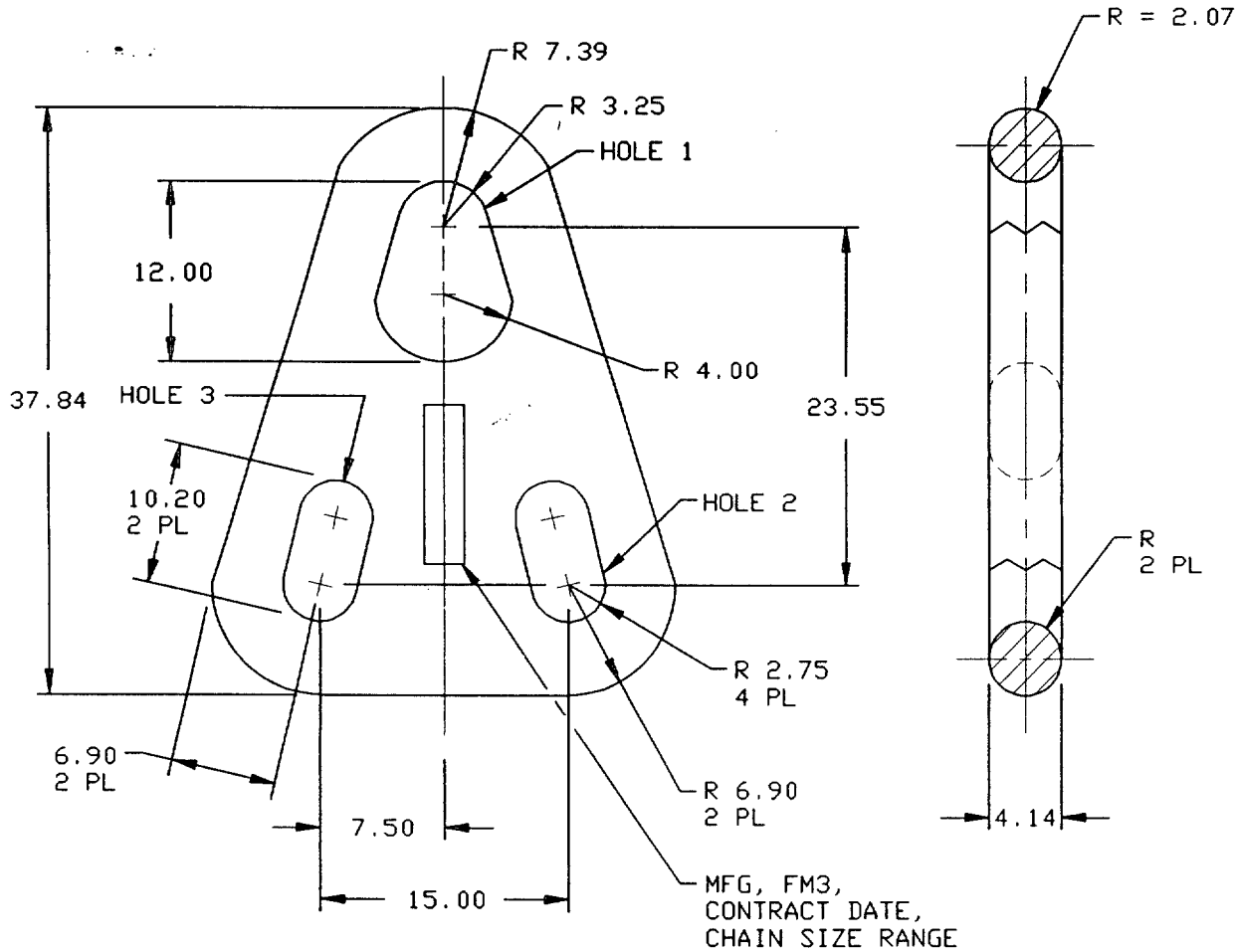

NOTES:

1. Hole 1 shall be compatible with the small end of 3 1/2-inch and 4-inch nominal chain size anchor joining links and shall satisfy the proof and break load requirements of 4-inch chain.

2. Holes 2 and 3 shall be compatible with the large end of 2 1/4-inch, 2 1/2-inch, and 2 3/4-inch anchor joining links and shall satisfy the proof and break load requirements of 2 3/4-inch chain.

3. All dimensions are in inches.

4. Tolerances:

   Holes 1, 2, 3 = + dimension times 0.20, - 0.00
   All other places = + dimension times 0.30, - 0.00

FIGURE 6. Spider plate.

Downloaded from http://www.everyspec.com

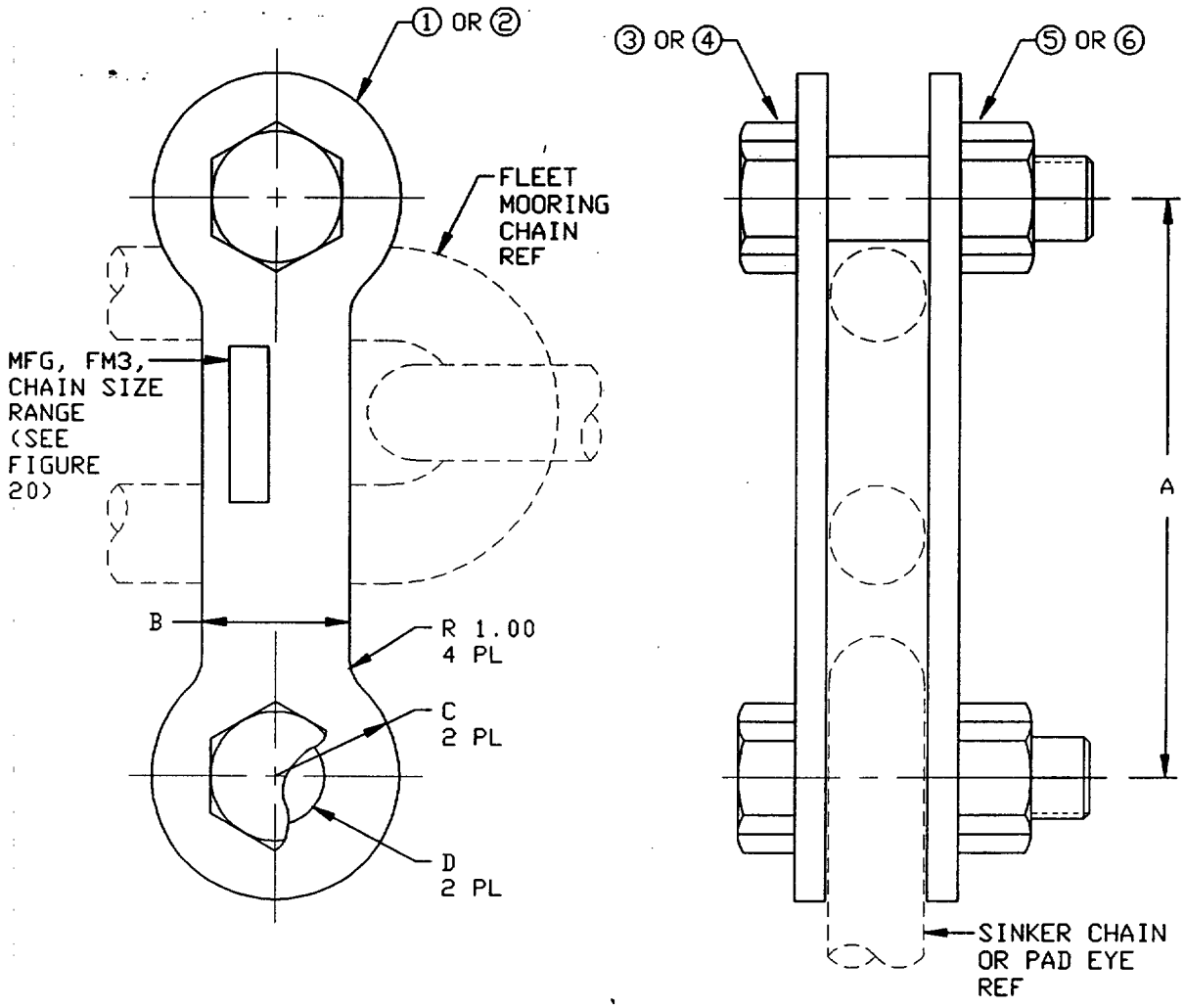

DASH NO.	SINKER CHAIN OR PAD EYE DIA REF	DIM A ± .12	DIM B ± .12	RADIUS C ± .12	DIA D ± .06
-1	1 3/4 TO 2	12.06	3.03	2.56	1.88
-2	2 1/4 TO 4	22.06	4.03	3.56	2.38

QTY REQD	QTY REQD	FIND NO.	PART OR IDENTIFYING NO.	NOMENCLATURE OR DESCRIPTION	SPECIFICATION	MATERIAL
2	-	6	GRADE DH	NUT, HEAVY, HEX, 2.250-8UN-2B	ASTM A563	STEEL
-	2	5	GRADE DH	NUT, HEAVY, HEX, 1.750-8UN-2B	ASTM A563	STEEL
2	-	4	GRADE BD	BOLT, HEX HD, 2.250-8UN-2A X 9.25L	ASTM A354	STEEL
-	2	3	GRADE BD	BOLT, HEX HD, 1.750-8UN-2A X 6.25L	ASTM A354	STEEL
2	-	2		PLATE, 1.25 STK	ASTM A36	STEEL
-	2	1		PLATE, 1.00 STK	ASTM A36	STEEL
-2	-1			PARTS LIST		

FIGURE 7. Plate sinker shackle.

Downloaded from http://www.everyspec.com

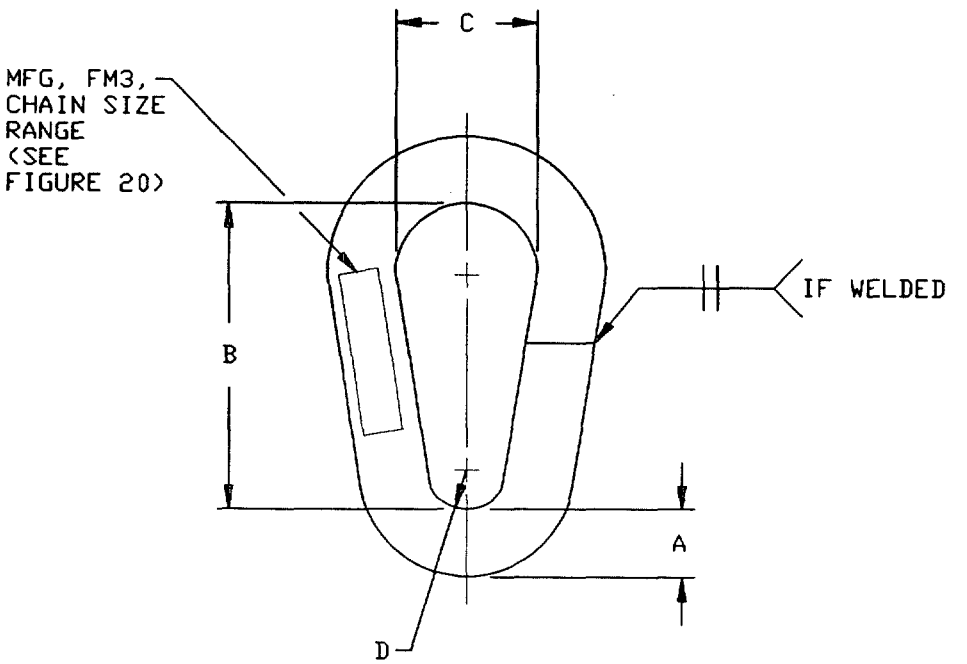

All dimensions in inches

Nominal Chain Size (d) (in)	A (min)	A (max)	B (min)	B (max)	C (min)	C (max)	D (min)	D (max)
1 3/4	2.25	2.38	11.50	11.67	4.19	4.32	1.38	1.44
2	2.50	2.63	13.73	14.03	4.91	5.21	1.64	1.74
2 1/4	2.75	2.87	14.50	14.69	5.37	5.50	1.73	1.83
2 1/2	3.00	3.13	16.16	16.34	5.92	6.05	1.92	2.02
2 3/4	3.50	3.63	17.70	17.88	6.47	6.60	2.11	2.21
3	3.75	3.83	19.21	19.33	6.82	7.28	2.28	2.40
3 1/2	4.25	4.33	23.90	24.08	8.77	8.90	2.85	2.97
4	4.75	4.87	26.22	26.40	9.61	9.74	3.13	3.25

FIGURE 8. Pear link.

Downloaded from http://www.everyspec.com

All dimensions in inches

Nominal Chain Size (d) (in)	A (min)	A (max)	B (min)	B (max)	C (min)	C (max)
1 3/4	11.81	12.08	6.91	7.09	2.10	2.16
2	13.50	13.80	7.90	8.10	2.40	2.49
2 1/4	15.19	15.53	8.89	9.11	2.70	2.79
2 1/2	16.88	17.25	9.88	10.13	3.00	3.10
2 3/4	18.56	18.98	10.86	11.14	3.30	3.40
3	20.25	20.70	11.85	12.15	3.60	3.69
3 1/2	23.65	24.15	13.83	14.18	4.20	4.29
4	27.00	27.60	15.80	16.20	4.80	4.89

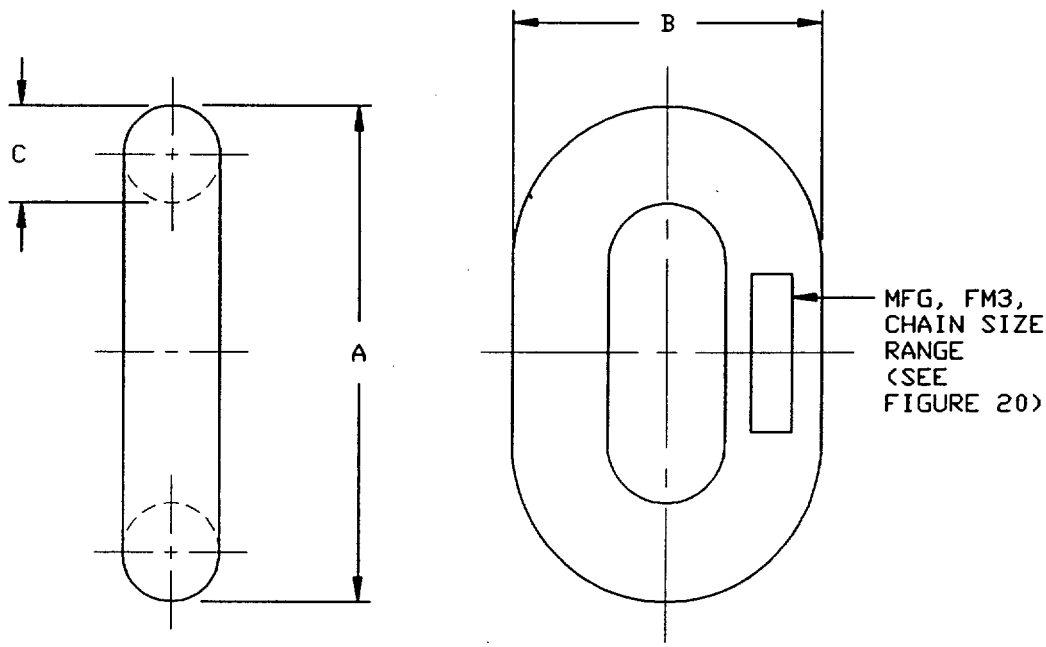

FIGURE 9. End link.

Downloaded from http://www.everyspec.com

All dimensions in inches

Nominal Chain Size (d) (in)	G (min)	G (max)	H (min)	H (max)	I (min)	I (max)	K
1 3/4	2.22	2.33	5.80	6.10	6.83	7.18	4.90
2	2.54	2.67	6.63	6.97	7.80	8.20	5.60
2 1/4	2.85	3.00	7.46	7.84	8.78	9.23	6.30
2 1/2	3.17	3.33	8.29	8.71	9.75	10.25	7.00
2 3/4	3.49	3.66	9.12	9.58	10.73	11.28	7.70
3	3.80	4.00	9.95	10.46	11.70	12.30	8.40
3 1/2	4.44	4.66	11.60	12.20	13.65	14.35	9.80
4	5.07	5.33	13.26	13.94	15.60	16.40	11.20

Notes:

1. Eye for pin J = (1.048)J, + (0.03)J, - 0.00.
   Eye for pin L = (1.048)L, + (0.03)L, - 0.00.
   Dimension L = (1.2)d, + (0.03)d, - 0.00.
   Dimension N = (1.4)d, + (0.05)d, - 0.00.
   Dimension J = (1.56)d, + (0.03)d, - 0.00.

2. For Pin dimension and dovetail dimension see FIGURE 5b.

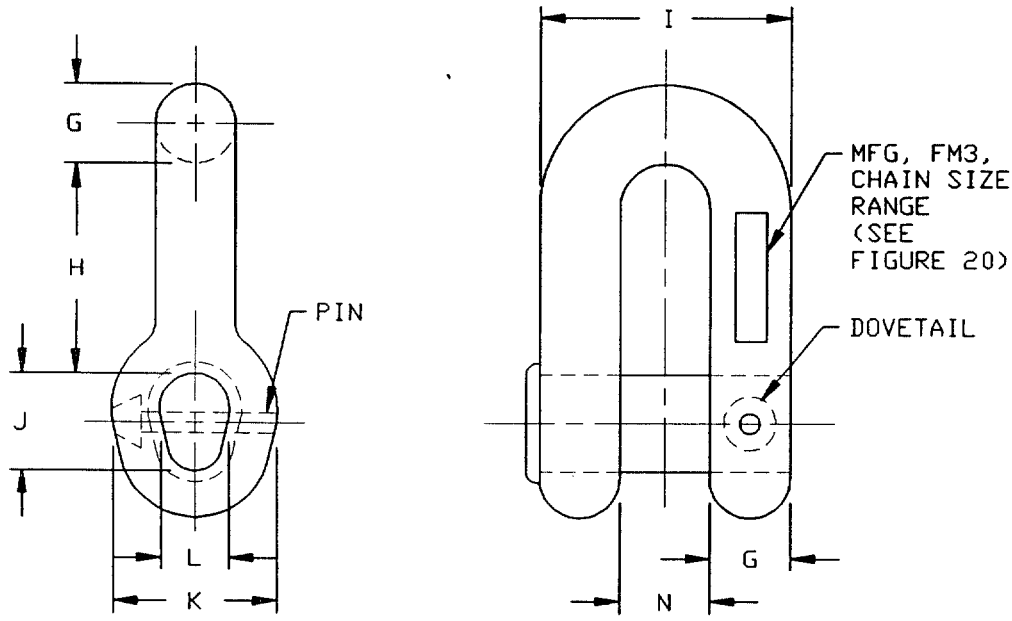

FIGURE 10. Joining shackle.

Downloaded from http://www.everyspec.com

All dimensions in inches

Nominal Chain Size (d) (in)	G (min)	G (max)	H (min)	H (max)	I (min)	I (max)	K
1 3/4	2.39	2.51	7.85	8.25	8.87	9.33	5.43
2	2.73	2.87	8.97	9.43	10.14	10.66	6.20
2 1/4	3.07	3.23	10.09	10.61	11.41	11.99	6.98
2 1/2	3.41	3.59	11.21	11.79	12.68	13.33	7.75
2 3/4	3.75	3.95	12.33	12.97	13.94	14.66	8.53
3	4.10	4.31	13.46	14.15	15.21	15.99	9.30
3 1/2	4.78	5.02	15.70	16.50	17.75	18.66	10.85
4	5.46	5.74	17.94	18.86	20.28	21.32	12.40

Notes:

1. Eye for pin J = (1.048)J, + (0.03)J, - 0.00.
   Eye for pin L = (1.048)L, + (0.03)L, - 0.00.
   Dimension L = (1.2)d, + (0.03)d, - 0.00.
   Dimension N = (1.4)d, + (0.05)d, - 0.00.
   Dimension J = (1.56)d, + (0.03)d, - 0.00.

2. For Pin dimension and dovetail dimension see FIGURE 5b.

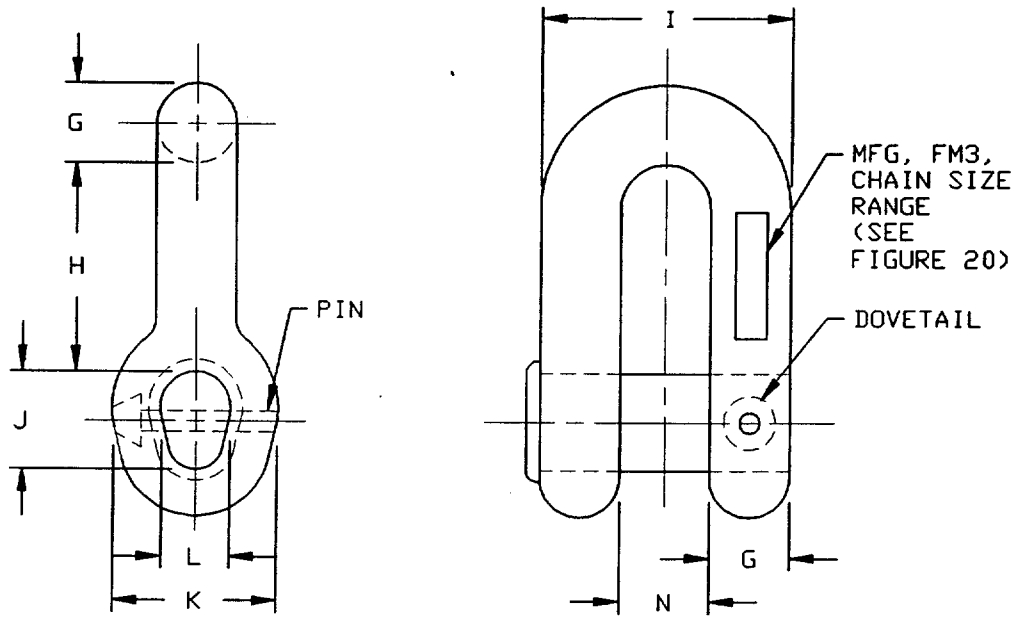

FIGURE 11. Anchor shackle.

Downloaded from http://www.everyspec.com

(All dimensions in Inches)

Nominal Shackle Size (d) (in)	W (min)	W (max)	P (min)	P (max)	R (min)	R (max)	L (min)	L (max)	D (min)	D (max)	B (min)	B (max)	BREAKING LOAD (min pounds)
1 3/8	2.13	2.37	1.46	1.54	3.22	3.40	5.00	5.50	1.32	1.44	3.51	3.75	162,600
1 1/2	2.26	2.50	1.59	1.67	3.54	3.72	5.50	6.00	1.44	1.56	3.76	4.00	204,100
1 3/4	2.76	3.00	1.95	2.05	4.21	4.43	6.75	7.25	1.69	1.81	4.88	5.13	352,000
2	3.13	3.37	2.19	2.31	4.88	5.13	7.50	8.00	1.94	2.06	5.61	5.89	454,000
2 1/2	3.88	4.38	2.68	2.82	5.85	6.15	9.75	11.25	2.55	2.69	7.06	7.44	692,000
3	4.75	5.25	3.17	3.33	6.34	6.66	12.25	13.75	2.93	3.08	7.68	8.08	970,000
3 1/2	5.00	5.50	3.66	3.84	7.75	8.25	13.88	15.38	3.41	3.59	8.78	9.23	1,285,000
4	5.25	5.75	4.14	4.36	8.75	9.25	13.75	15.25	3.90	4.10	9.75	10.25	1,632,000

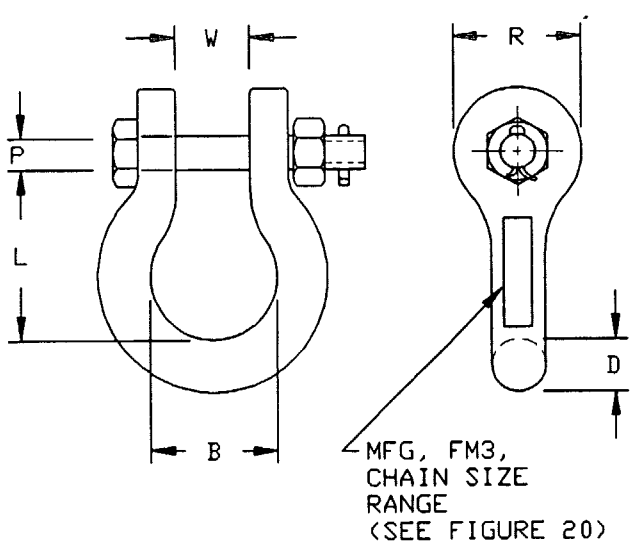

Notes:

1. Eye for pin P = (1.048)P, location clearance fit. Split key pin diameter: chain size 1 3/8 through 2 1/2 inches = 3/8 inch, 3 through 4 inches = 1/2 inch. Split key length: (1.5)P.

2. Nominal sizes are the manufacturer's nomenclature and do not correspond to the nominal chain size; specific shackles will not necessarily have the same material and strength characteristics as chain of the same nominal size. Buoy shackles shall include bolt, nut, and cotter pin.

FIGURE 12. Buoy shackle.

Downloaded from http://www.everyspec.com

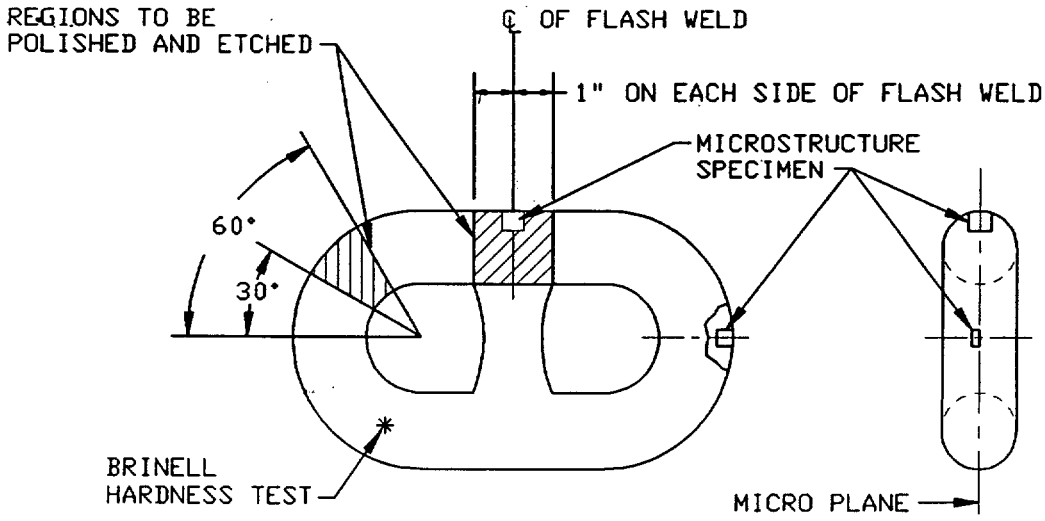

CHAIN

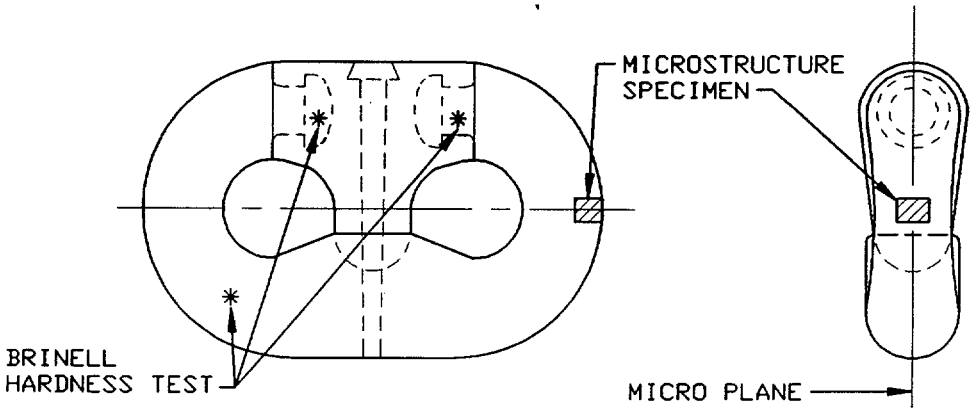

JOINING LINKS

FIGURE 13. Test locations for chain and joining links.

Downloaded from http://www.everyspec.com

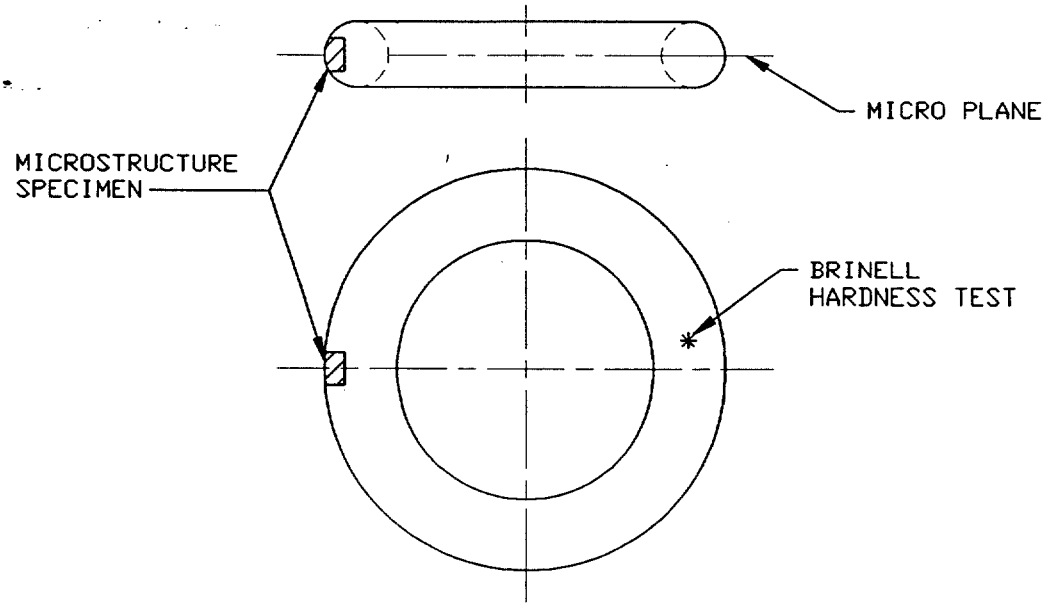

GROUND RING

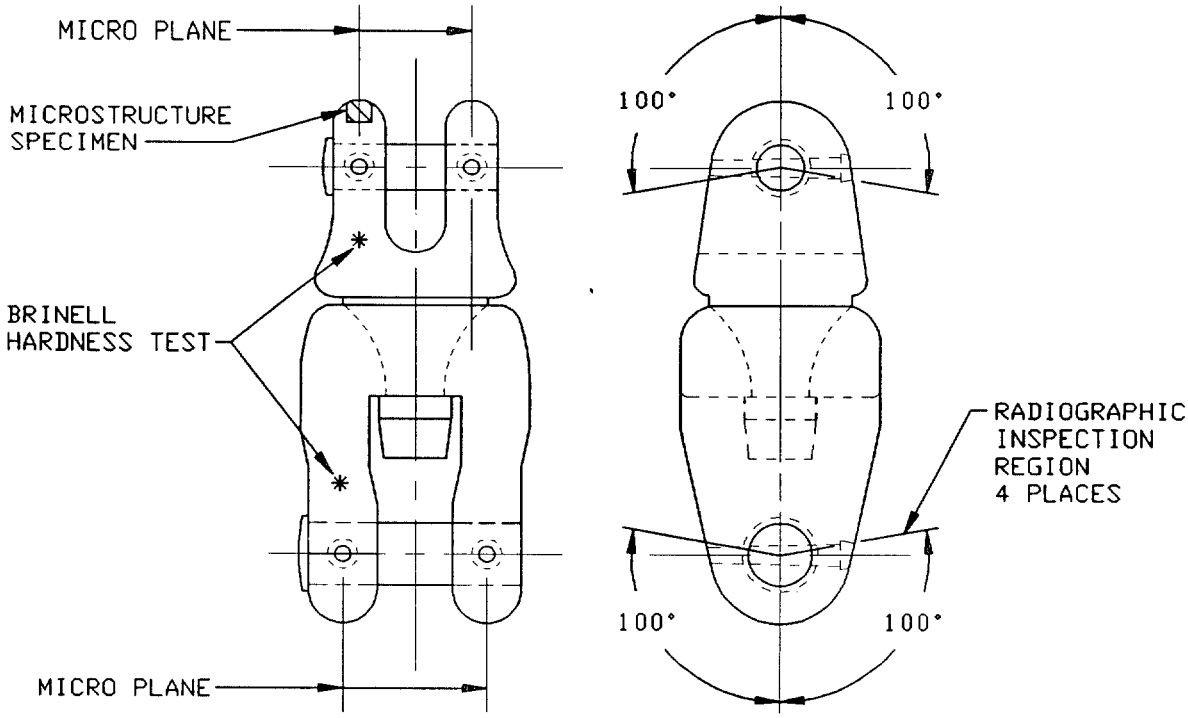

SWIVEL SHACKLE

FIGURE 14. Test locations for ground ring and swivel shackles.

Downloaded from http://www.everyspec.com

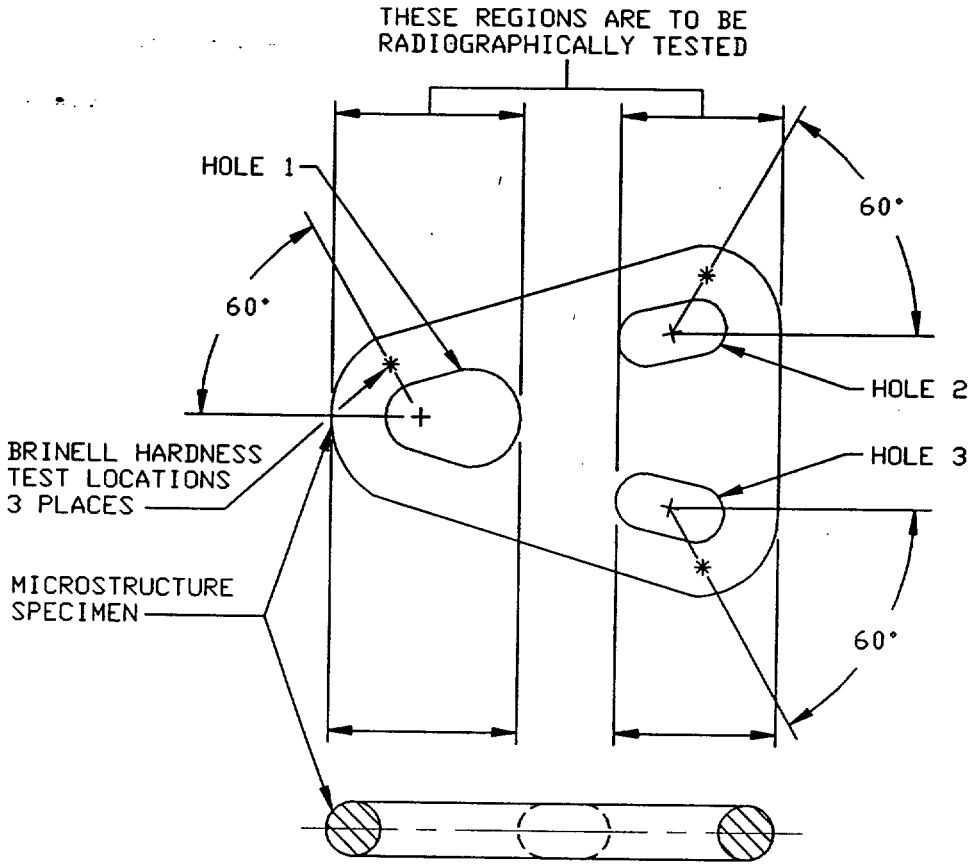

SPIDER PLATE

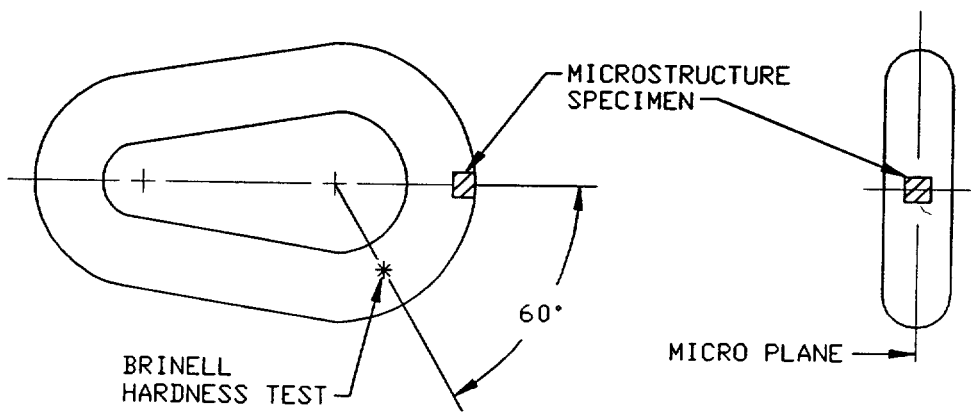

PEAR LINK

FIGURE 15. Test locations for spider plate and pear link.

Downloaded from http://www.everyspec.com

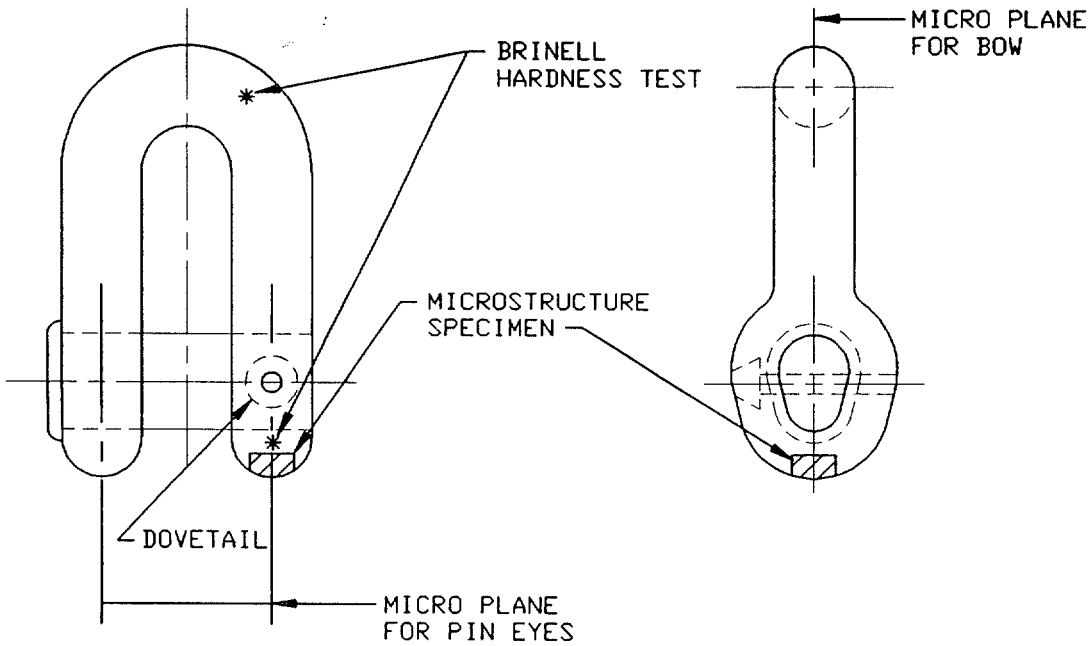

FIGURE 16. Test locations for shackles.

Downloaded from http://www.everyspec.com

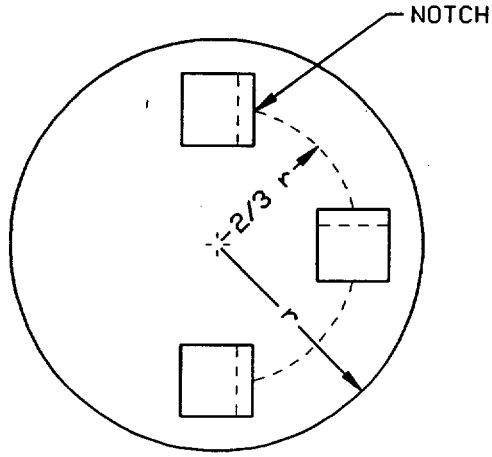

FIGURE 17. Orientation of charpy V-notch impact test specimens.

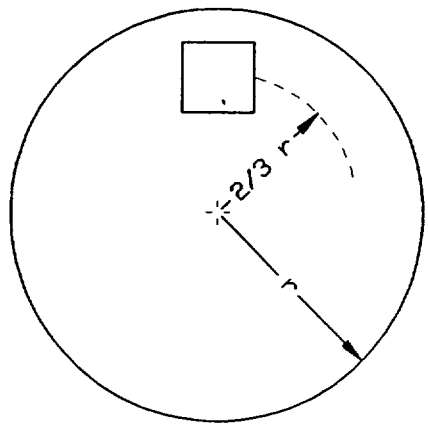

FIGURE 18. Orientation of tensile test specimens.

Downloaded from http://www.everyspec.com

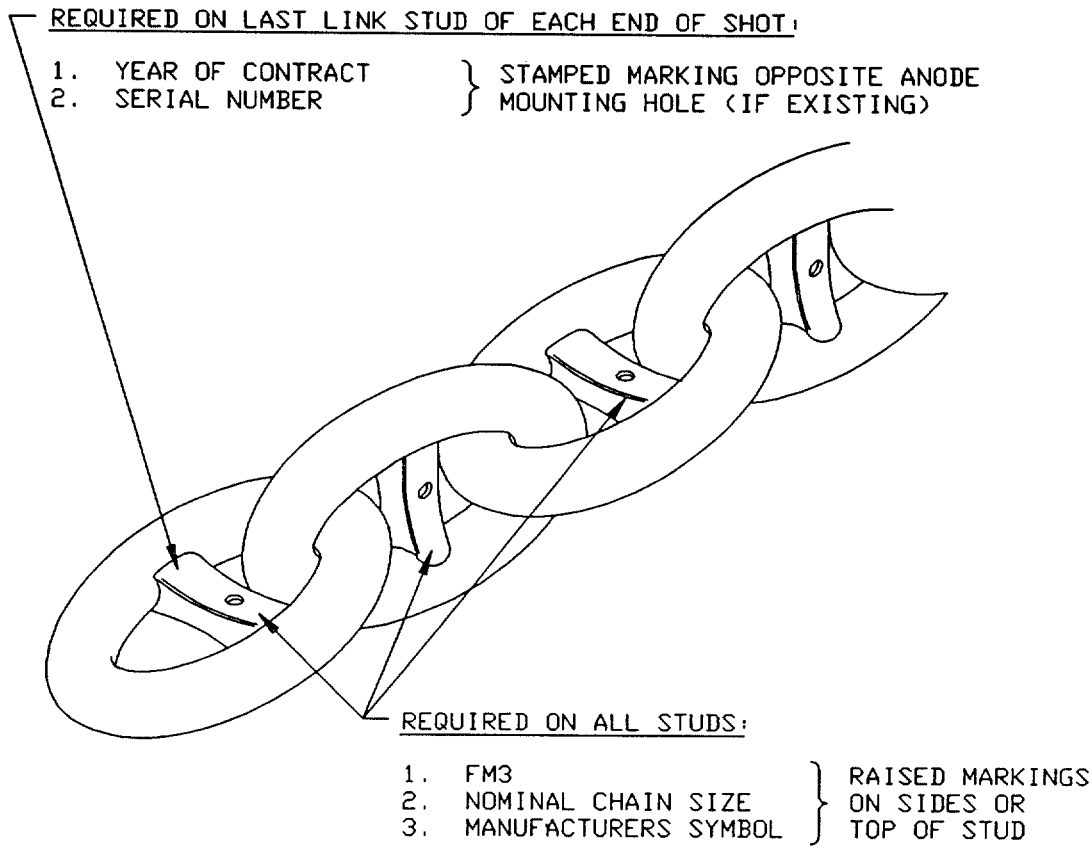

FIGURE 19. Chain marking.

Downloaded from http://www.everyspec.com

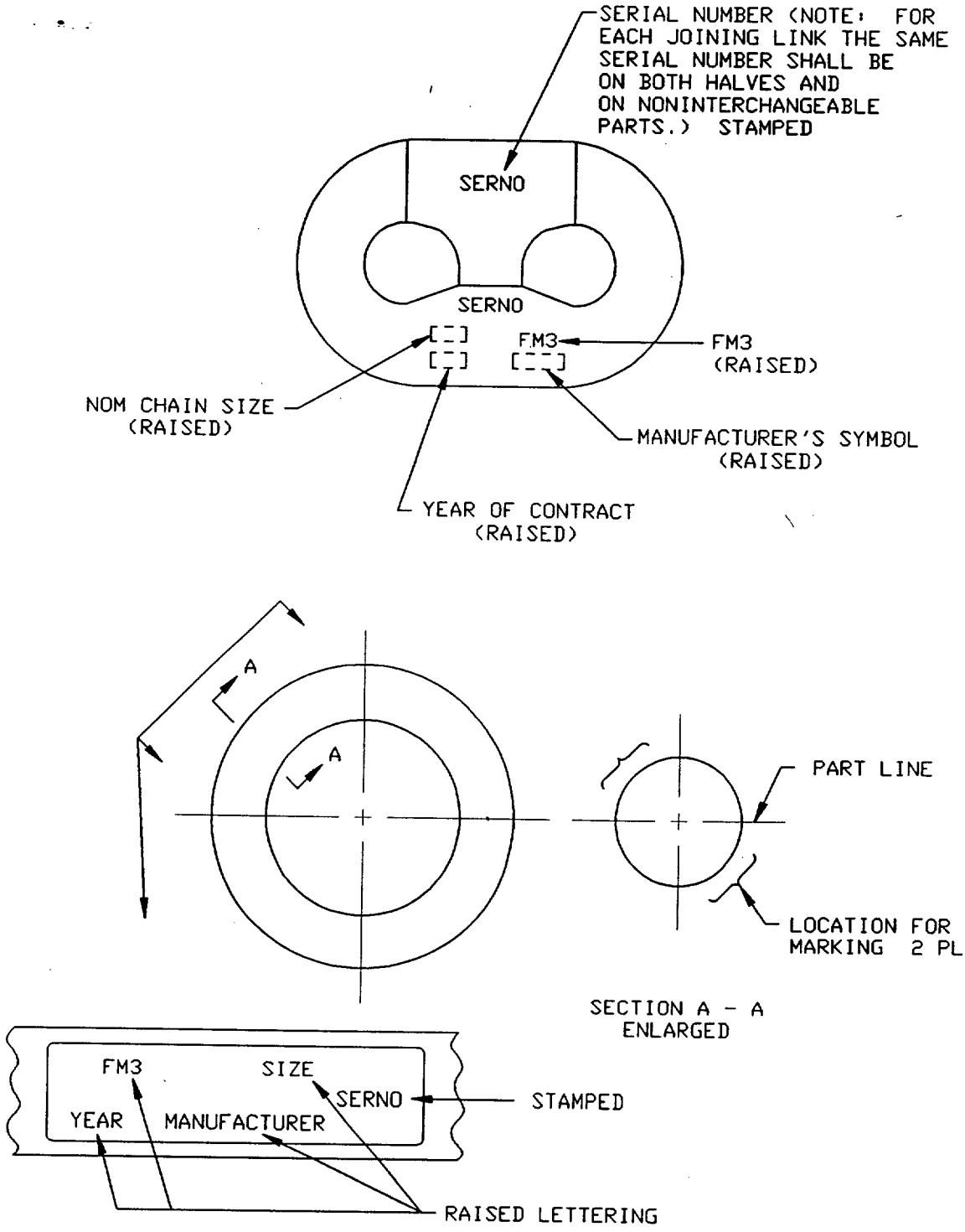

FIGURE 20. Marking data for all accessories.

Downloaded from http://www.everyspec.com

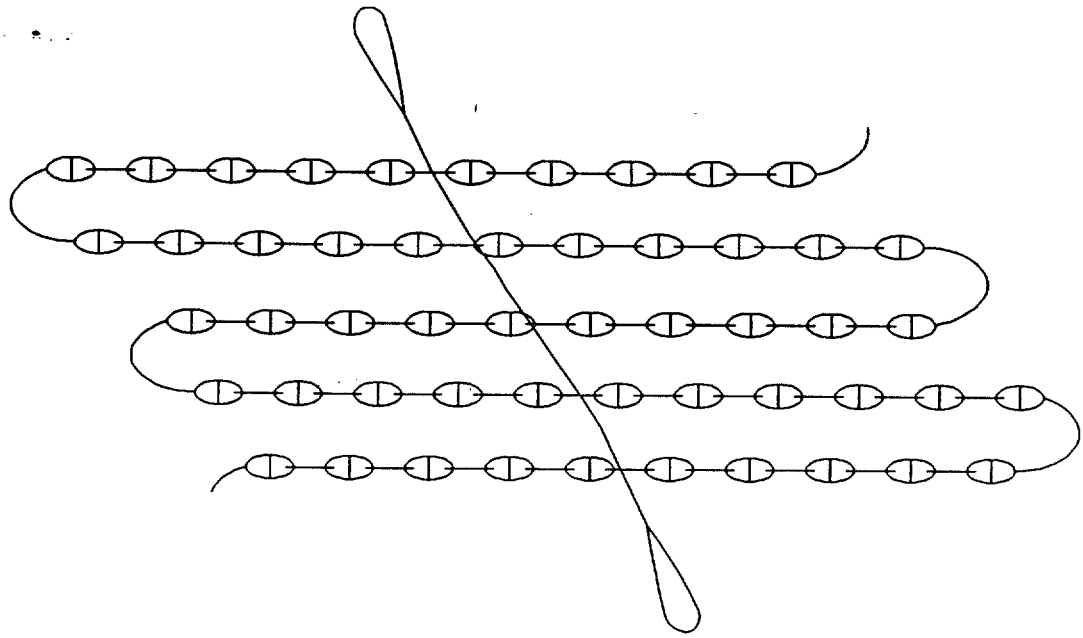

LACING THE SLING THROUGH THE CHAIN LINKS

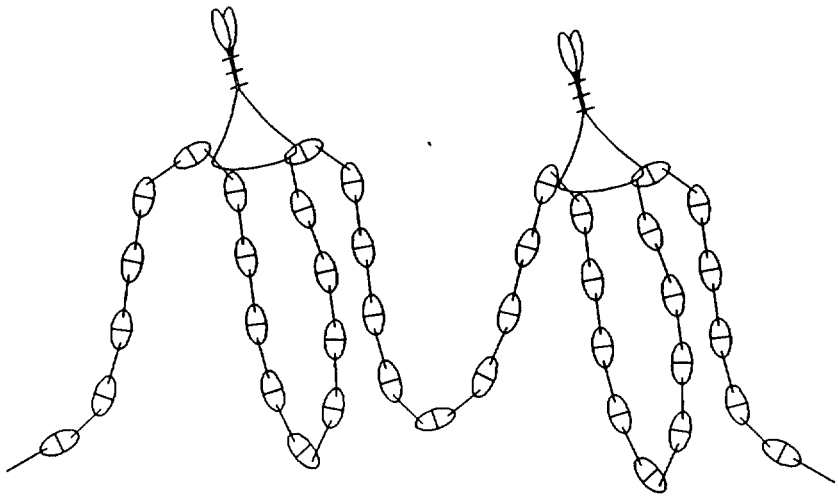

BUNCHING FOR LIFTING

FIGURE 21. Chain bundle.

Downloaded from http://www.everyspec.com

STANDARDIZATION DOCUMENT IMPROVEMENT PROPOSAL

INSTRUCTIONS

1. The preparing activity must complete blocks 1, 2, 3, and 8. In block 1, both the document number and revision letter should be given.
2. The submitter of this form must complete blocks 4, 5, 6, and 7.
3. The preparing activity must provide a reply within 30 days from receipt of the form.

NOTE: This form may not be used to request copies of documents, nor to request waivers, or clarification of requirements on current contracts. Comments submitted on this form do not constitute or imply authorization to waive any portion of the referenced document(s) or to amend contractual requirements.

I RECOMMEND A CHANGE:	1. DOCUMENT NUMBER	2. DOCUMENT DATE (YYMMDD)
	MIL-C-18295E	920414

3. DOCUMENT TITLE
CHAINS AND FITTINGS FOR FLEET MOORING

4. NATURE OF CHANGE *(Identify paragraph number and include proposed rewrite, if possible. Attach extra sheets as needed.)*

5. REASON FOR RECOMMENDATION

6. SUBMITTER

a. NAME (Last, First, Middle Initial)	b. ORGANIZATION	
c. ADDRESS (Include Zip Code)	d. TELEPHONE (Include Area Code) (1) Commercial (2) AUTOVON (If applicable)	7. DATE SUBMITTED (YYMMDD)

8. PREPARING ACTIVITY

a. NAME	b. TELEPHONE (Include Area Code) (1) Commercial	(2) AUTOVON
COMMANDING OFFICER	(805) 982-5615	551-5615
c. ADDRESS (Include Zip Code) NCBC CESO (CODE 1564C) PORT HUENEME, CA 93043-5000	IF YOU DO NOT RECEIVE A REPLY WITHIN 45 DAYS, CONTACT: Defense Quality and Standardization Office 5203 Leesburg Pike, Suite 1403, Falls Church, VA 22041-3466 Telephone (703) 756-2340 AUTOVON 289-2340	