Downloaded from http://www.everyspec.com

MIL-C-15730K(SHIPS)
12 November 1973
SUPERSEDING
MIL-C-15730J(SHIPS)
1 July 1958
(See 6.6)

MILITARY SPECIFICATION

COOLERS, FLUID, NAVAL SHIPBOARD: LUBRICATING OIL, HYDRAULIC OIL, AND FRESH WATER

1. SCOPE

1.1 Scope. This specification covers lubricating oil, hydraulic oil and fresh water coolers for Naval Shipboard applications where requirements dictate resistance to shock and construction standards higher than the "commercial marine" level. Fresh water cooling applications include engine jacket water, electronics, battery, condensate/drain, missile, and engine room fresh water system applications.

1.2 Classification. The coolers shall be of the following types and classes, as specified (see 6.1.1):

Type A - Shell and tube design, with the cooling fluid circulated through the tubes, and the fluid to be cooled circulated through the shell.
- Class 1 - Submarine, salt water cooled, salt water side subject to sea pressure for greater than 200 feet submergence, cyclic life stipulated.
- Class 2 - Submarine, salt water cooled, salt water side secured for greater than 200 feet submergence.
- Class 3 - Surface ship, salt water cooled.
- Class 4 - Submarine, fresh water cooled.
- Class 5 - Surface ship, fresh water cooled.

Type B - Fabricated tube design, with cooling fluid circulating through the casing, and the fluid to be cooled circulating through the tubes.
- Class 2 - Submarine, salt water cooled, salt water side secured below 200 feet submergence.
- Class 3 - Surface ship, salt water cooled.
- Class 4 - Submarine, fresh water cooled.
- Class 5 - Surface ship, fresh water cooled.

2. APPLICABLE DOCUMENTS

2.1 The following documents of the issue in effect on date of invitation for bids or request for proposal, form a part of the specification to the extent specified herein.

SPECIFICATIONS

FEDERAL

FF-W-84 - Washers, Lock (Spring).
HH-P-151 - Packing; Rubber Sheet, Cloth-Insert.
QQ-B-613 - Brass, Leaded and Nonleaded: Flat Products (Plate, Bar, Sheet, and Strip).
QQ-B-637 - Brass, Naval: Rod, Wire, Shapes, Forgings and Flat Products With Finished Edges (Bar, Flat Wire and Strip).
QQ-B-639 - Brass, Naval: Flat Products (Plate, Bar, Sheet, and Strip).
QQ-B-750 - Bronze, Phosphor; Bar Plate, Rod, Sheet, Strip, Flat Wire, And Structural And Special Shaped Sections.
QQ-C-390 - Copper Alloy Castings (Including Cast Bar).
QQ-C-450 - Copper-Aluminum Alloy (Aluminum Bronze) Plate, Sheet, Strip, And Bar (Copper Alloy Numbers 606, 612, 613, 614, and 628).
QQ-C-465 - Copper-Aluminum Alloys (Aluminum Bronze) (Copper Alloy Numbers 606, 614, 630, and 642); Rod, Flat Products with finished edges (Flat Wire, Strip and Bar) Shapes, and Forgings.
QQ-C-576 - Copper Flat Products With Slit, Slit And Edge-Rolled, Sheared, Sawed, Or Machined Edges, (Plate, Bar, Sheet, And Strip).
QQ-C-591 - Copper-Silicon, Copper-Zinc-Silicon, and Copper-Nickel-Silicon Alloys: Rod, Wire, Shapes, Forgings, and Flat Products, (Flat Wire, Strip, Sheet, Bar, and Plate).

Downloaded from http://www.everyspec.com

FEDERAL (cont'd)

QQ-N-281 - Nickel-Copper-Alloy Bar, Plate, Rod, Sheet, Strip, Wire, Forgings, And Structural and Special Shaped Sections.
QQ-N-286 - Nickel-Copper-Aluminum Alloy, Wrought.
QQ-S-631 - Steel, Bar, Carbon, Hot Rolled (Special Quality).
QQ-S-691 - Steel Plate, Carbon-Silicon, Carbon Molybdenum And Manganese-Molybdenum Alloys, Hot Rolled, (Marine Boiler Quality).
TT-P-645 - Primer, Paint, Zinc-Chromate, Alkyd Type.
WW-T-756 - Tubes; Condenser and Ferrule Stock, Admiralty Metal.
PPP-B-601 - Boxes, Wood, Cleated-Plywood.
PPP-B-621 - Boxes, Wood, Nailed and Lock-Corner.
PPP-C-650 - Crates, Wood, Open and Covered.
PPP-P-40 - Packaging and Packing of Hand Tools.
PPP-P-591 - Box, Fiberboard, Wood-Cleated.

MILITARY

MIL-P-116 - Preservation, Methods of.
MIL-R-196 - Repair Parts For Internal Combustion Engines, Packaging of.
MIL-B-857 - Bolts, Nuts and Studs.
MIL-S-901 - Shock Tests, H.I. (High-Impact); Shipboard Machinery, Equipment and Systems, Requirements For.
MIL-D-1000 - Drawings, Engineering and Associated Lists.
MIL-D-1000/2 - Drawings, Engineering and Associated Lists.
MIL-G-1149 - Gasket Materials, Synthetic Rubber, 50 and 65 Durometer Hardness.
MIL-T-1368 - Tube and Pipe, Nickel-Copper Alloy, Seamless and Welded.
MIL-C-3774 - Crates, Wood; Open 12,000 - And 16,000 Pound Capacity.
MIL-P-5510 - Packing, Preformed, Straight Thread Tube Fitting Boss.
MIL-G-5514 - Gland Design; Packings, Hydraulic, General Requirements For.
MIL-T-15005 - Tubes, 70-30 and 90-10 Copper Nickel Alloy, Condenser and Heat Exchanger.
MIL-P-15024 - Plates, Tags and Bands For Identification of Equipment.
MIL-P-15024/5 - Plates, Identification.
MIL-M-15071 - Manuals, Technical: Equipments and Systems Content Requirements for.
MIL-S-15083 - Steel Castings.
MIL-P-15137 - Provisioning Technical Documentation For Repair Parts For Electrical and Mechanical Equipment (Naval Shipboard Use).
MIL-C-15726 - Copper-Nickel Alloy, Rod, Flat Products (Flat Wire, Strip, Sheet, Bar, and Plate) and Forgings.
MIL-E-15809 - Expander, Tube, Condenser and Heat Exchangers.
MIL-S-16113 - Steel Plate, High Tensile (HT), Hull and Structural.
MIL-C-16173 - Corrosion Preventative Compound, Solvent Cutback, Cold Application.
MIL-T-16420 - Tube, 70-30 and 90-10 Copper-Nickel Alloy, Seamless and Welded.
MIL-B-16541 - Bronze, Valve: Castings.
MIL-A-17472 - Asbestos Sheet, Compressed (Gasket Material).
MIL-A-18001 - Anodes, Corrosion Preventive, Zinc; Slab, Disc, and Rod Shaped.
MIL-A-19521 - Anodes, Corrosion Preventive, Zinc, and Plugs, Zinc Anode Retaining: Design of and Installation In Shipboard Condensers and Heat Exchangers.
MIL-F-20042 - Flanges, Pipe, Bronze (Silver Brazing).
MIL-T-20157 - Tube and Pipe, Carbon Steel, Seamless.
MIL-C-20159 - Copper-Nickel Alloy (70-30 and 90-10), Castings.
MIL-S-20166 - Steel Structural Shapes, Weldable Medium Carbon And High Tensile; Hull and Structural.
MIL-T-20168 - Tube, Brass (Red Brass), Seamless.
MIL-F-21467 - Fittings, Flareless, Fluid Connection (Shipboard Use).
MIL-G-21610 - Gaskets, Heat Exchanger, Various Cross Section Rings Synthetic Rubber.
MIL-B-22191 - Barrier Materials, Transparent, Flexible, Heat Sealable.
MIL-S-22473 - Sealing, Locking, and Retaining Compounds: Single-Component.
MIL-B-24059 - Bronze, Nickel Aluminum; Rod, Flat Product with Finished Edges, Shapes and Forgings.
MIL-T-24107 - Tube, Copper (Seamless).
MIL-B-24480 - Bronze, Nickel-Aluminum Castings, for Seawater Service.
MIL-I-45208 - Inspection System Requirements.

Downloaded from http://www.everyspec.com

STANDARDS

MILITARY

MIL-STD-22 - Welded Joint Designs.
MIL-STD-129 - Marking for Shipment and Storage.
MIL-STD-278 - Fabrication Welding and Inspection; and Casting Inspection and Repair for Machinery, Piping and Pressure Vessels in Ships of the United States Navy.
MIL-STD-758 - Packaging Procedures For Submarine Repair Parts Utilizing Transparent Flexible, Heat Sealable Film.
MIL-STD-1399, Section 301 - Interface Standard for Shipboard Systems, Ship Motion and Attitude.
MS16142 - Boss, Gasket Seal Straight Thread Tube Fitting, Standard Dimensions For.

DRAWINGS

NAVSHIPS

B-214 - Root Connections for Attaching Piping.
810-1385861 - Flanges, Sea Water 700 PSI max.
810-1385875 - Plugs, Zinc, and Adaptors for Heat Exchangers.
810-1385915 - Fittings, Pipe, Composition, Flanged 100 PSI max at 425° Max.

PUBLICATION

NAVSHIPS

0900-001-7000 - Fabrication and inspection of Brazed Piping Systems.

(Copies of specifications, standards, drawings, and publications required by suppliers in connection with specific procurement functions should be obtained from the procuring activity or as directed by the contracting officer.)

2.2 Other publications. The following documents form a part of this specification to the extent specified herein. Unless otherwise indicated, the issue in effect on date of invitation for bids or request for proposal shall apply.

AMERICAN SOCIETY FOR TESTING AND MATERIALS (ASTM)

A53 - Welded and seamless Steel Pipe.
A106 - Seamless Carbon Steel Pipe for High-Temperature Service.
A181 - Forged or Rolled Steel Pipe,Flanges, Forged Fittings, and Valves and Parts for General Service
A214 - Electric-Resistance-Welded Carbon Steel Heat Exchanger and Condenser Tubes.
A285 - Pressure Vessel Plates, Carbon Steel, Low- and Intermediate-Tensile Strength.
A515 - Pressure Vessel Plates, Carbon Steel for Intermediate and Higher-Temperature Service.
A516 - Pressure Vessel Plates, Carbon Steel, For Moderate- and Lower-Temperature Service.
A569 - Steel Carbon (0.15 Maximum Percent), Hot-Rolled Sheet and Strip, Commercial Quality.
B16 - Free-Cutting Brass Rod, Bar, and Shapes for Use in Screw Machines.
B36 - Brass Plate, Sheet, Strip and Rolled Bar.
B111 - Copper and Copper-Alloy Seamless Condenser Tubes and Ferrule Stock.
B121 - Leaded Brass Plate, Sheet, Strip, and Rolled Bar.
B122 - Copper-Nickel-Zinc Alloy (Nickel Silver) and Copper-Nickel Alloy Plate, Sheet, Strip, and Rolled Bar.
B135 - Seamless Brass Tube.
B143 - Tin Bronze and Leaded Tin Bronze Sand Castings.
B151 - Copper-Nickel-Zinc Alloy (Nickel Silver) and Copper-Nickel Rod and Bar.
B152 - Copper, Sheet, Strip, Plate, And Rolled Bar.
B171 - Copper - Alloy Condenser Tube Plates.
B209 - Aluminum - Alloy Sheet and Plate.
B211 - Aluminum - Alloy Bars, Rods and Wire.
B241 - Aluminum - Alloy Seamless Pipe and Seamless Extruded Tube.
B271 - Copper-base Centrifugal Castings.
B402 - Copper-Nickel Alloy Plate and Sheet for Pressure Vessels.

Downloaded from http://www.everyspec.com

(Applications for copies should be addressed to the American Society for Testing and Materials, 1916 Race Street, Philadelphia, Pennsylvania 19103.)

AMERICAN SOCIETY OF MECHANICAL ENGINEERS (ASME)
Boiler and Pressure Vessel Code
Section III - Rules for Construction of Nuclear Power Plant Components.
Section VIII, Division I - Pressure Vessels.

(Application for copies should be addressed to the American Society of Mechanical Engineers, United Engineering Center, 345 East 47th Street, New York, New York 10017.)

AMERICAN NATIONAL STANDARDS INSTITUTE, INC. (ANSI)
B.12 - Class 5 Interference-Fit Thread.
B16.5 - Steel Pipe Flanges and Flanged Fittings.

(Application for copies should be addressed to the American National Standards Institute, Inc., 1430 Broadway, New York, New York 10018.)

NATIONAL BUREAU OF STANDARDS
Handbook H28 - Screw Thread Standards for Federal Services.

(Application for copies should be addressed to the Superintendent of Documents, Government Printing Office, Washington, D.C. 20402.)

STANDARDS OF TUBULAR EXCHANGE MANUFACTURERS ASSOCIATION (TEMA)

(Application for copies should be addressed to the Tubular Exchange Manufacturers Association, Inc., 331 Madison Avenue, New York, N.Y. 10017.)

OAK RIDGE NATIONAL LABORATORY
"CERL-II - A Computer Program for Analyzing Hemisphere-Nozzle Shells of Revolution with Axisymmetric and Unsymmetric Loadings" by S.E. Moore and F.J. Witt.

(Application for copies should be addressed to Clearinghouse, U.S. Department of Commerce, Springfield, Virginia 22151.)

FRANKLIN INSTITUTE RESEARCH LABORATORY
Technical Report F-C2438-4 - Development of an Integrated Computer Program for stress Analysis of Axisymmetric Double Tubesheet Heat Exchangers Subjected to Axisymmetric or Nonsymmetric Thermal and Mechanical Loadings. (Defense Documentation Center Nr. AD890717L.)

(Application for copies should be addressed to Defense Documentation Center, Cameron Station, Alexandria, Virginia 22314.)

UNIFORM CLASSIFICATION COMMITTEE
Uniform Freight Classification Rules.

(Application for copies should be addressed to the Uniform Classification Committee, Room 1106, 222 South Riverside Plaza, Chicago, Illinois 60606.)

NATIONAL MOTOR FREIGHT TRAFFIC ASSOCIATION, INC.
National Motor Freight Classification

(Application for copies should be addressed to the National Motor Freight Traffic Association, Inc., 1616 P. Street N.W., Washington, D.C. 20036.)

(Technical society and technical association specification and standards are generally available for reference from libraries. They are also distributed among technical groups and using Federal agencies.)

3. REQUIREMENTS

3.1 Sample for first article inspection. Prior to beginning production a sample shall be examined and tested as specified in 4.2 (see 6.3).

Downloaded from http://www.everyspec.com

3.1.1 Application of cooler types and classes.

3.1.1.1 Coolers for submarine service with salt water as coolant which will be subject to sea pressure for greater than 200 feet submergence shall be type A, class 1. For these coolers, design and analysis as specified in 3.3.15 and 3.3.16, is required based upon cyclic loading requirements of 3.3.14.1.

3.1.1.2 Coolers for submarine service with salt water as coolant for applications where the salt water side of the cooler will be secured for greater than 200 feet submergence (e.g., engine jacket water cooler for a diesel-generator) shall be type A or B, class 2.

3.1.1.3 Coolers for surface ship and service craft with salt water as coolant shall be type A or B, class 3.

3.1.1.4 Coolers for submarine service with fresh water as coolant shall be type A or B, class 4.

3.1.1.5 Coolers for surface ship and service craft with fresh water as coolant shall be type A or B, class 5.

3.1.2 Lubricating oil coolers for main propulsion turbines and gears or main propulsion gears shall be type A.

3.1.2.1 Lubricating oil coolers using scoop injection of circulating water shall be of single pass construction on the cooling water side and shall be of the straight tube type.

3.1.3 Hydraulic oil coolers shall be type A.

3.1.4 In the case of small lubricating oil coolers, consideration will be given to designs that combine an oil cooler with a by-pass valve, or an oil cooler with a by-pass valve and oil strainer in a single assembly.

3.2 General requirements.

3.2.1 Code requirements for type A coolers. Type A coolers shall be produced in compliance with Standards of Tubular Exchanger Manufacturers Association (TEMA) with class "C" Mechanical Standards applying, except as may be otherwise specified herein. The structural design calculations for the class 1 coolers shall be in accordance with Section III (class 1 vessel) of ASME Boiler and Pressure Vessel Code. Structural design calculations for coolers other than class 1 shall be in accordance with ASME Boiler and Pressure Vessel Code, Section VIII, Division I.

3.2.2 Space and weight. Space occupied and weight of coolers shall be held to a minimum consistent with meeting the requirements of this specification and stipulated performance requirements.

3.2.3 Requirements due to ship attitude or motion. Unless otherwise specified (see 6.1.1), coolers shall meet the requirements of MIL-STD-1399, section 301 in regards to ship motion and attitude.

3.2.4 Ambient pressure. For submarine application, coolers shall be designed to operate at an ambient pressure of 30 inches of mercury absolute with a variation of plus or minus 6 inches of mercury, and shall not be damaged when subjected to an ambient pressure of between 10 and 30 pounds per square inch absolute (psia) with the minimum internal pressure which will prevail under any condition of operation.

3.2.5 Welding and allied processes.

3.2.5.1 Fabrication, welding and inspection shall be in accordance with part I of MIL-STD-278 except as modified herein.

3.2.5.2 For type A, class 1 coolers, all welding on parts subjected to sea pressure, including the entire double tube sheet assembly, shall be in accordance with class A-F of MIL-STD-278 except as modified herein. Welded joints on the salt water side shall be radiographable except for vent and drain nipples. Waterbox vent and drain nipple welded connections shall meet the 100 percent weld efficiency requirement for pressure vessels.

3.2.5.3 For coolers which are classified as class A-4 pressure vessels in accordance with MIL-STD-278, weld joints P-64 and P-66 of MIL-STD-22 will be allowed for waterbox (channel) nozzle and shell nozzle attachments.

Downloaded from http://www.everyspec.com

3.2.6 Casting inspection and repair. Casting inspection and repair shall be in accordance with part II of MIL-STD-278.

3.2.7 Brazing. Brazing shall be in accordance with NAVSHIPS 0900-001-7000 except that requirements for use of preinserted brazing rings are applicable only to pipe fittings. Brazed joints shall be designed to permit ultrasonic inspection. Brazing shall not be used for the following applications:

(a) Joints for which a cyclic life requirement is stipulated (e.g., the salt water side of a class 1 cooler).
(b) Shell pipe to shell hub joints of nominal 10 inch diameter and greater.

3.2.8 Screw threads. Thread form, dimensions, and tolerances shall conform to Handbook H28.

3.2.8.1 Threaded fasteners. Threaded fasteners shall conform to MIL-B-857, except that materials shall be as specified in 3.3.1 and 3.4.1. The design shall be such that standard wrenches can be used throughout. Tapered pipe threads shall not be used. A class 5 interference fit conforming to ANSI B1.12 may be substituted for assembly of tap-end of studs. The practice of "bottoming" or "shouldering" studs shall not be used. For the set end of studs, a class 3A fit used with sealing compound, grade AV of MIL-S-22473, may be substituted for a class 5 interference fit. Threaded fasteners with torque requirements should be lubricated before assembly. The lubricant used shall be identified on the applicable drawings and shall be one of the following unless otherwise approved by the Naval Ship Engineering Center (NAVSEC):

(a) Red lead - graphite-mineral oil. (This lubricant shall be made as follows: 4-1/2 pounds of high grade, dry red lead shall be weighed in a clean container. 1-1/4 pounds of finely divided, high grade, air-floated graphite shall be weighed in a clean container. One quart of straight mineral oil (viscosity shall be 275-325 saybolt universal seconds (SUS) at 37.8° Celsius (C) (100°F)) shall be measured in a clean, gallon container. The graphite shall be added slowly to the red lead, stirring constantly until the mixture is uniform in consistency and color. The mixture of red lead and graphite shall be added slowly to the oil, stirring constantly, until a smooth, uniform blend, free of lumps, is obtained.) This lubricant shall not be used on alloys containing more than 15 percent nickel if the temperature of operation exceeds 400°F.
(b) "Molykote", type G (molybdenum disulphide, mineral oil, lithium soap base). This lubricant shall not be used on austenitic stainless steels.

3.2.8.1.1 Preferred fastener types. Preferred fastener types are, in order of preference:

(a) Through bolt or through (2-nut) stud.
(b) Tap-end stud (one-nut).
(c) Cap screw or cap bolt.

3.2.8.1.2 Cap screws and cap bolts. Cap screws and cap bolts shall not be used for waterbox-to-shell (or waterbox-to-tube sheet) bolting, for inspection cover bolting, or for zinc anode support cover bolting.

3.2.8.1.3 For all waterbox and tube sheet bolting on submarine and surface ship heat exchangers, the following requirements shall apply:

(a) The bolting shall be tightened to a stipulated prestress value by means of a torque wrench.
(b) Drawings shall contain instructions covering the prestressing of bolts, and a full description of the procedures shall be contained in the technical manual.
(c) For submarine coolers subject to submergence pressure, bolting design including stipulated prestress values shall be established and supporting calculations shall be furnished.
(d) Bolting design shall allow margin between the minimum and maximum acceptable prestress values. The margin shall be sufficient to guarantee that an actual bolt stress which is 1/3 above the stipulated value is not greater than the upper prestress limit, and that an actual bolt prestress which is 1/3 below the stipulated value is not less than the lower prestress limit. Calculations supporting the upper and lower prestress limits shall be furnished for submarine coolers subjected to submergence pressure.

Downloaded from http://www.everyspec.com

3.2.8.1.4 Where collar bolts or stud bolts are used to make up a multiple flange joint, so that it can be selectively disassembled, such bolts or studs have a square extension beyond the threads on one end, for use of a wrench to prevent turning of the bolt when the nuts are tightened or removed.

3.2.9 Shockproofness. The design of all coolers shall be such that they will be capable of passing the high-impact shock tests specified in MIL-S-901 and meet grade A criteria with the shipboard mounting fixtures being used. (Note: For barge tested units, barge foundations will be shipbuilder furnished.) Shock test extension criteria given in MIL-S-901 will be adhered to with the following exception; shock test extension request will not be granted if the request is for a cooler that is longer or larger in diameter than the previously approved cooler.

3.2.10 Allowable pressure drop. Unless otherwise specified (see 6.1.1), the maximum permissible fluid side pressure drops at design conditions shall be as follows:

(a) For main propulsion turbine lubricating oil coolers using scoop injection of circulating water:
Tube (salt water) side --- 4 pounds per square inch gage (psig)
Shell (oil) side --------- 15 psig

(b) For other lubricating oil coolers and fresh water coolers:
Coolant side ---------- 6 psig
Cooled fluid side (oil) ---------- 12 psig
Cooled fluid side (fresh water) --------- 6 psig

(c) For hydraulic oil coolers:
Tube (coolant) side ------ 6 psig
Shell (oil) side --------- 25 psig

3.2.11 Cooling water velocity limits. Cooling water maximum velocities at design point shall not exceed those shown in table I. For coolers using sea water as a coolant, the velocity through the tubes shall not be less than 3 feet per second. (Note: In determining shell side velocities, the paragraph in TEMA (class C) entitled "Tube Bundle Vibration" should be taken into consideration. In no case, however, should the shell side velocities exceed those velocities given in table I for "velocity through tubes".)

Table I - Maximum cooling water velocities.

Coolant and method of supply	Velocity through inlet flange, feet per second	Velocity through tubes feet per second
Sea water supplied by "scoop injection"	11.0	9.0
Sea water otherwise supplied	9.0	7.5
Fresh water however supplied	11.0	9.0

3.2.12 Cooling water inlet temperature. Unless otherwise specified (see 6.1.1) for design purposes temperatures of coolant supply shall be taken as follows:

	Coolant	Temperature, °F
(a) Submarines:	Sea Water	85
	Fresh water	95
(b) Large surface ships:	Sea water (electronic system)	95
	Sea water (other)	90
	Fresh water	95
(c) Patrol boats and small crafts:	Sea water	95
	Fresh water	100

3.2.13 Heat transfer coefficient. The service heat transfer coefficient shall be calculated using the fouling resistances given in table II. For any fluid not listed in table II, the resistance given in the latest edition of the TEMA should be used.

Downloaded from http://www.everyspec.com

#

Table II - Fouling resistances.

Fluid	Resistances, hr ft^2°F/BTU
Sea water	0.0005
Fresh water	.0005
Lubricating oil	.001
Hydraulic oil	.001
Fuel oil:	
up to 100 SSU (at 100°F)	.002
100 SSU to 500 SSU (at 100°F)	.003
500 SSU to 2000 SSU (at 100°F)	.004
Over 2000 SSU (at 100°F)	.005

3.2.14 Heat transfer surface. The amount of cooling surface installed in all coolers shall be based on the service specified (see 6.1.1) and the surface required should be calculated using the service heat transfer coefficient (see 3.2.13).

3.2.15 Inlet and outlet connections. Inlet and outlet connections for coolant and cooled fluid shall be flanged unless hose connections are specified (see 6.1.1). Connection flanges shall be of the cast-integral or of the welding-type. For non-ferrous applications, the flange standards of MIL-F-20042 and Drawing 810-1385915 shall be minimum standards for connection flanges. For ferrous applications the 150 pound primary service pressure rating flange standards of ANSI B16.5 shall be minimum standards. For cast waterboxes, shells and shell hubs and equivalent cast-integral nozzle flange may be used in cases where connections are expressed (see 6.1.1) in terms of pipe flange standards; for these cases requirements for flange identification markings are waived. For fabricated waterboxes, shells and shell hubs the following requirements apply:

(a) Non-ferrous applications for classes 1 and 2; unless otherwise specified (see 6.1.1), flanges shall be in accordance with Drawing 810-1385861.
(b) Non-ferrous applications in other than classes 1 and 2; welding-type slip-on flanges may be used, adapted from and fully comparable to the flanges specified in the contract or order with welded joint design P-16 of MIL-STD-22 being used for their attachment.
(c) Ferrous applications; flanges shall be of the welding-neck, socket welding or slip-on welding types.

3.2.16 Flange finish. The machine finish of gasket mating surfaces of connecting flanges shall be as follows:

(a) Non-ferrous and ferrous flanges for use with sheet gaskets:
  (1) For flanges of a nominal size of 12 inches or less, a finish with a circular lay (concentric or phonograpic) of 125 to 1000 roughness height rating (rhr) produced by machining 30 to 80 cuts of uniform depth per inch of face width.
  (2) For flanges over a nominal size of 12 inches, the requirements shall be the same except that 21 to 80 cuts per inch of face width may be used.
  (3) For flanges where the flange face cannot be turned and tool marks run across the flange face, the surface finish shall have a maximum rhr of 500.
(b) All flanges for "0" ring seals:
  (1) A finish of 63 rhr maximum in "0" ring grooves.
  (2) A finish of 125 rhr maximum on the flange face opposite the groove.

3.2.17 Provisions shall be made to permit complete venting and draining of the coolant and cooled fluid circuits. When double tube sheet construction is specified, the inter-tube sheet spaces shall also have vent and drain connections. Minimum size for vent and drain connections shall be 1/8 inch iron pipe size (ips). Unless otherwise specified (see 6.1.1) such root connections shall have the wall thickness in accordance with MIL-T-16420; 70-30

Downloaded from http://www.everyspec.com

copper nickel tube (class 6000 for 1 inch and smaller; class 3300 for 1.050 inch and larger) and shall be of the following types:

(a) For coolant side and inter-tube sheet spaces of submarine cooler applications designed for salt water cooling:
  (1) Full penetration weld with joint design in conformity with P-70, P-71, or P-72 of MIL-STD-22. Nipples shall be composition 70-30, copper-nickel, in accordance with MIL-C-15726.
  (2) Figure 2 of Drawing B-214.

(b) For other applications, in addition to the methods specified in (a) above, the following are acceptable:
  (1) Single-J, fillet-reinforced weld V-27 in accordance with MIL-STD-22. Nipples shall be copper-nickel conforming to MIL-T-16420.
  (2) Figure 6 of Drawing B-214 except with sockets having a raised boss designed to permit ultrasonic inspection. Unless otherwise specified, in the contract or order, the nipples shall be furnished and shall be composition 90-10 copper-nickel in accordance with MIL-T-16420.
  (3) Tapped hole fitted with an adaptor in accordance with Drawing 810-1385875.
  (4) Tapped hole in accordance with MS16142 fitted with an adaptor in accordance with MIL-F-21467, except fitting to be composition 90-10, copper-nickel alloy in accordance with MIL-C-15726.

(c) In addition to methods of (b) above, for other applications where the connection will not normally be in contact with salt water, a socket weld using a T by 2T minimum fillet in accordance with P-14 of MIL-STD-22 will be acceptable.

3.2.17.1 Preferred practice for high pressure applications is to lead waterbox vent and drain connections out via the waterbox flange or tube sheet.

3.2.18 Connections for pressure gages shall be provided at inlets and outlets of coolant and cooled fluid sides when specified (see 6.1.1), such connections shall conform to 3.2.17.

3.2.19 Supports. Coolers shall be provided with supports for securing to a foundation or parent machine. The means of support shall be independent of connecting piping. When coolers are designed to be supported from a vertical structure (e.g., bulkhead), the supports shall be so designed that bolts in shear will not constitute the primary means of support. Coolers shall not be designed to be supported by plates or brackets in such manner that the primary means of support is obtained from the bolts securing the shell end-flange-tube sheet-waterbox flange joints.

3.2.19.1 Foundation bolt hole allowances. The drilling of foundation bolt holes in cooler feet, other than for the case of the close allowance bushing application (see 3.2.20), shall conform to the following criteria:

(a) For bolt sizes up to and including 3/4 inch diameter, drill d + 1/32 inch.
(b) For bolt sizes over 3/4 inch diameter, drill d + 1/16 inch.

Where:
d = bolt diameter in inches.

3.2.20 Provision for shell expansion relative to supports. When the distance between cooler supports exceeds 24 inches, provision shall be made for expansion and contraction of the shell with respect to its supports. The use of elongated or oversize bolt holes in support feet is not, by itself, an acceptable method. The following are acceptable methods:

(a) Providing freedom for one end of the shell to move in the axial direction by means of elongated holes in the foot of that shell support, with shell end motion in the other two planes being restricted by use of close allowance collared bushing (collar may be integral or separate from the bushing) assembled over and rigidly bolted down by the foundation bolts at that end. When this method of support is used the other (fixed) support and its foundation bolts shall be capable of carrying the entire load due to high-impact shock in the direction longitudinal of the shell.

Downloaded from http://www.everyspec.com

(b) Providing freedom for one end of the shell to move in the axial direction by the use at that end of the cooler of a support designed to flex as the shell expands and contracts. When this method of support is used the other (fixed) support and its foundation bolts shall be capable of carrying the entire load due to high-impact shock in the direction of longitudinal of the shell. Where coolers have cast shells or shell hubs, the flexible support may be designed as a separate piece to be bolted to the cast shell end.

3.2.21 Provision for shell expansion relative to tubes. For fixed bundle (stationary tube sheets at both ends) coolers, a shell expansion joint shall be provided to compensate for expansion differential between shell and tubes when the tube bundle length (back-to-back of tube sheets) is greater than 18 inches. The expansion joint shall be located between one support and shell end flange.

3.2.22 Gasket application. For liquid side applications of 200 psig design pressure and under, flat gaskets shall be used. O-ring gaskets shall be used for design pressures above 200 psig. Use of "blind" gaskets or packings (those not capable of being replaced without destruction dissassembly) is prohibited.

3.2.23 Flat gaskets. Compressed asbestos gaskets shall be 1/16 or 1/32 inch thick. Cloth inserted rubber gaskets shall be 1/16 inch thick. Coolers shall be so designed that an adequate gasket width is provided under waterbox partitions and this gasket width shall be not less than 5/16 inch. Flat gasket joints shall be of the full face type, unconfined ring type, semi-confined type or fully confined type.

3.2.24 O-ring gaskets. All O-ring gaskets shall conform to type I of MIL-G-21610 for fresh water, salt water, and standard lubricating and petroleum hydraulic oil applications, except for the special applications for adaptors and plugs; in these cases, O-ring gaskets in accordance with MIL-P-5510 may be used. When the application is for an oil with which the type I rubber is not compatible, the desired rubber shall be specified (see 6.1.1). O-ring segments for sealing under waterbox partitions shall be integral with the peripheral O-ring.

3.2.24.1 Design of retaining grooves for O-ring gaskets shall conform to MIL-P-5514.

3.2.25 Selection of rubber packing and gasket materials. In selection of rubber packing materials full consideration shall be given to the temperature demands of the application, and to compatability with the working fluids. Packing rings conforming to class 1 or class 5 of MIL-G-1149 have good compatability with the petroleum base lube oils.

3.2.26 Drawings. Drawings shall be in accordance with MIL-D-1000/2 and with MIL-D-1000 (category A) to the extent invoked by MIL-D-1000/2. The cooler drawings shall be those of the cooler manufacturer. Cooler drawings prepared by other than the cooler manufacturer will be considered for preliminary review only. Assembly and detail drawings of the cooler, subassemblies and parts shall be type II (ship equipment) drawings. Form of drawings shall be form 2. Drawings shall be submitted to the drawing review agency (see 6.5) for approval. Any proposed areas of departure from the specifications must be explicitly requested, with supporting basis, by the initial letter of submittal, and shall be called out as exceptions in the certification data (cd) sheet "statement of conformance".

3.2.26.1 Ship equipment drawings. Ship equipment drawings shall show details of all equipment furnished. Information usually furnished on outline or installation drawings may be shown on the assembly drawing. Sectional views and enlarged views shall be liberally employed to indicate details of parts, subassemblies, and assemblies. The word "ASSEMBLY" shall appear in the title of the cooler assembly drawing only. Where multiple detail views are shown on more than one sheet, the drawing titles shall be distinctive. (The title "DETAILS" will not be sufficient.)

3.2.26.2 Certification data sheet. A certification data sheet shall be furnished. It shall be entitled "Certification Data for....". (Type of cooler, for example, lubricating oil cooler, jacket water cooler or battery cooler, and its designation by model number, or by size and type, or the equivalent, to be entered to complete the title.) The certification data sheet shall be included in the first submission of ship equipment drawings.

3.2.26.2.1 Content of certification data sheets. In lieu of the requirements of MIL-D-1000/2, the certification data sheets shall embody the following information:

(a) Identification by hull number of the applicable ships - located above the title block.

Downloaded from http://www.everyspec.com

(b) Notes attesting to conformance with the specification, indicating the contract or order, the application (service) of the unit, the number of coolers per ship and per unit of parent equipment (such as engine). The conformance note should be in accordance with MIL-D-1000/2.

The following examples illustrate the requirements for the other notes:

(1) NAVSHIPS contract N00024-7X-C-1234 (this number is an example only) with ABC Engine Company; ABC Engine Company purchase order 5678 on EFG Cooler Manufacturing Company.
(2) Service: Lubricating oil cooling for main propulsion turbines and gears; or, jacket water cooling for emergency diesel generator set; or submarine main storage battery cooling.
(3) Eight coolers per ship, one cooler per blower; or, four coolers per ship, one cooler per engine; or, 12 coolers furnished as stock material (use only when ship application is not known).

(c) A "drawing list" tabulation including the following columns:
(1) Drawing title.
(2) Manufacturer's drawing number.
(3) Revision symbol.

This list shall include all equipment drawings which comprise the given design. The revision symbol column shall be kept up to date to the time of manufacture so that it will finally indicate the latest revision of each drawing applicable to the equipment as built.

(d) A "performance data" tabulation to include the following:
(1) Identification of cooled and cooling mediums.
(2) Flow rate of cooled and cooling mediums (gallons per minute (gpm)).
(3) Inlet temperature of cooled and cooling mediums (°F).
(4) Outlet temperature of cooled and cooling mediums (°F).
(5) Pressure drops of cooled and cooling mediums through cooler (psi).
(6) Velocities of cooled and cooling mediums at inlet connection feet per second (fps).
(7) Velocities of cooled and cooling mediums through tubes and shell fps.
(8) Number of passes of cooled and cooling mediums through cooler.
(9) Design pressures of cooled and cooling mediums (psig).[1/]
(10) Factory test pressure, shell side (psig).
(11) Factory test pressure, tube side (psig).[2/]
(12) Factory test pressure, space between double tube sheets (psig), when applicable.[3/]
(13) Logarithmic mean temperature difference (°F).
(14) Heat transfer rates for both service and clean tube conditions (British thermal units (Btu)) per hour per square foot per °F logarithmic mean temperature difference).
(15) Cooling surface (square feet). (For coolers using extended surface tubes, both the plain tube surface and the total surface including fins shall be shown.)
(16) Heat transfer capacity at design point (Btu per hour).

(e) A view of the identification plate with all data entered except date of manufacturer, serial number, and tube side maximum test pressure for submarine salt water applications. For these applications use an arrow leading in, to indicate the blank spaces where tube side maximum test pressure would have been entered, with the notation "TUBE SIDE MAXIMUM TEST PRESSURE NOT TO BE STAMPED ON IDENTIFICATION PLATE" placed at the tail of the arrow. This view shall be enlarged when necessary to insure that data entries will meet lettering height requirements (1/8 inch).

(f) The technical equipment manual number, provided such manuals are required by the order and the manufacturer has received the assigned number.

(g) The component identification number allowance parts list number (APL), if available.

(h) Certifying signature of manufacturer's responsible engineering representative. (This should not be at lower than professional engineer level).

(i) An approval notation of the type required for type II drawings in accordance with MIL-D-1000/2.

See footnotes on beginning of next page.

Downloaded from http://www.everyspec.com

1/ When coolers are for salt water service on submarines, no design pressure entry shall be made for the salt water side.

2/ When coolers are for salt water service on submarines, in lieu of an entry in the tabulation opposite this heading, the space should be left blank. Beside the tabulation use an arrow leading in to indicate this blank space, and at the tail of the arrow add a note "FOR TUBE SIDE TEST PRESSURE SEE NOTE....ON.....DWG.....,NAVSHIPS NR....., "TEST DATA, ...'". This note is to be completed when the specific information becomes available from the building yard.

3/ When coolers are for salt water service on submarines, in lieu of an entry in the tabulation opposite this heading, the space should be left blank. Beside the tabulation use an arrow leading in to indicate this blank space, and at the tail of the arrow add a note "FOR TEST PRESSURE FOR SPACE BETWEEN DOUBLE TUBE SHEETS SEE NOTE..... ON..... DWG....., NAVSHIPS NR....., 'TEST DATA, ...'". This note to be completed when information becomes available from the building yard.

3.2.27 Technical manuals. Technical manuals, when required, shall conform to type I of MIL-M-15071.

3.2.27.1 Technical manuals shall be furnished for submarine coolers which will be subjected to salt water submergence pressure. These manuals shall include instructions as to pre-stress values and corresponding torques which shall be applied to bolts, when making up joints subjected to submergence pressure, and the pattern of tightening the bolting. Technical manuals shall give special attention to tube expanding procedures when single tube - double tube sheet construction is involved.

3.2.27.2 Technical manuals shall be furnished for coolers embodying double tube sheet construction.

3.2.27.3 For other coolers technical manuals shall be furnished only when specified (see 6.1.1).

3.2.28 Identification plates. Each cooler shall bear an identification plate in conformance with Class A, B, C or D of MIL-P-15024 and MIL-P-15024/5 with material choice being limited to the wrought brass, cast brass, cast bronze or corrosion-resisting steel prescribed therein. (NOTE: All plates shall be "normal service plate"). Provision shall be made for the following information:

(a) Name of unit, (LUB. OIL COOLER, FRESH WATER COOLER, BATTERY COOLER, HYDRAULIC OIL COOLER).
(b) Type of unit (see 1.2).
(c) Class of unit (see 1.2).
(d) Manufacturer's service part number.
(e) Federal stock number.1/
(f) Name of manufacturer.
(g) Contract or order number.2/ (The procuring activity's contract or purchase order number shall be entered in this space.)
(h) Blank space for Defense Contract Administration Services (DCAS) stamp.
(i) Date of manufacture.
(j) Serial number.
(k) Maximum factory test pressure, shell side.
(l) Maximum factory pressure, tube side.3/
(m) Blank space for "unit" number.4/ (This space will be used for numbering for shipboard reference purposes when required, the stamping to be done by shipyard.)
(n) Designation "U.S.".

1/ Allow 17 spaces.

2/ Utilize width of plate to allow maximum number of spaces.

3/ When coolers are for salt water service on submarines, no entry shall be made in this space (see 3.2.26.2.1).

4/ Allow 4 spaces.

Design pressure entries shall not appear on identification plates.

Downloaded from http://www.everyspec.com

3.3 Type A (shell and tube design) requirements.

3.3.1 Materials. For type A coolers the materials shown in tables III, IV, V, VI and VII as specified hereinafter shall be used as the basis for design. They shall be used in the construction of the coolers, except that the manufacturer shall have the option of substituting commercial material having equal or better physical and chemical properties than the materials specified under Federal or Military specifications. If the manufacturer exercises the above option, he shall include two columns in the List of Materials on his drawings; one column shall be used for the specified Federal or Military specifications, and the other shall show the commercial specification number for the substituted material. Notes shall then appear on the drawings stating that:

(a) The design is based on the Federal or Military Specification materials.
(b) The materials listed in the commercial specification column have physical and chemical properties which are equal to or better than the specified Federal or Military specification and may be substituted by the manufacturer.

3.3.1.1 Type A, class 1 coolers shall be constructed of the materials specified in table III.

Table III - Type A, class 1 cooler materials.

Part	Material	Applicable document
Shells	Copper-nickel-alloy, composition 90-10; tubing, copper-nickel-alloy, composition 90-10; copper-aluminum alloy, copper alloy number 614; tubing brass; copper, rolled; tubing, copper; valve bronze; bronze, aluminum, cast, alloy No. 954 or 955 bronze, nickel-aluminum	MIL-C-15726 MIL-T-16420 QQ-C-450 MIL-T-20168 QQ-C-576 MIL-T-24107 MIL-B-16541 QQ-C-390 MIL-B-24480
Waterboxes[1/]	Copper-nickel-alloy, composition 70-30 Tubing, copper-nickel-alloy, composition 70-30 Copper-nickel-alloy, composition 70-30; or Bronze, nickel-aluminum	MIL-C-15726 MIL-T-16420 MIL-C-20159 MIL-B-24480
Tube sheets[2/]	Copper-nickel-alloy, composition 70-30; or copper-aluminum alloy, copper alloy No. 628	MIL-C-15726 QQ-C-450
Tubes	Copper-nickel-alloy, composition 70-30	MIL-T-15005
Other tubes, for double tube construction	Nonferrous	--------
Fins	Nonferrous	--------
Gland rings and lantern rings	Bronze, tin, centrifugal castings, alloy 903 or 922; or Bronze, tin, sand castings, alloy 903 or 922 valve bronze; or copper-nickel-alloy	ASTM B271 ASTM B143 MIL-B-16541 MIL-C-15726

See footnotes at end of table.

Downloaded from http://www.everyspec.com

Table III - Type A, class 1 cooler materials (cont'd.).

Part	Material	Applicable document
Baffles	Copper-Nickel-Alloy; or Brass Brass, leaded, copper alloy No. 356 Brass, copper alloy No. 260	MIL-C-15726 QQ-B-631 ASTM B121 ASTM B36
Spacers	Copper-Nickel-alloy; or Brass Admiralty copper alloy Nos. 403, 444 or 445	MIL-C-15726 MIL-T-20168 ASTM B16
Spacer rods and nuts	Copper-Nickel-alloy; or Brass, red copper alloy No. 230, and 443; or Brass; or Brass, copper alloy No. 360	MIL-C-15726 ASTM B111 QQ-B-637 ASTM B16
Bolts and studs: For salt water service subject to submergence pressure For other service	Nickel-copper-alloy, class A; or nickel-copper-aluminum alloy, class A, age hardened Copper-aluminum alloy, copper alloy No. 614; or phosphor bronze; or copper-silicon alloy	QQ-N-281 QQ-N-286 QQ-C-465 QQ-B-750 QQ-C-591
Nuts: For salt water service subject to submergence pressure For other service	Nickel-copper-alloy; or Nickel-copper-aluminum alloy, class A, age hardened Copper-aluminum alloy, copper alloy No. 614; or Phosphor bronze; or Copper-silicon-alloy	QQ-N-281 QQ-N-286 QQ-C-465 QQ-B-750 QQ-C-591
Jack screws	Copper-aluminum alloy, copper alloy No. 614; or phosphor bronze; or copper-silicon alloy	QQ-C-465 QQ-B-750 QQ-C-591
Zinc protectors	Zinc	MIL-A-18001
Plugs, zinc support	Copper-nickel-alloy, alloy 715 Nickel-copper-alloy	ASTM B122 QQ-N-281
Gaskets[3/]	Rubber, synthetic, cloth insertion; or asbestos, compressed	HH-P-151 MIL-A-17472
Washers	Copper-aluminum alloy, copper alloy No. 614; or brass, naval	QQ-C-465 QQ-B-639

See footnotes at end of table.

Downloaded from http://www.everyspec.com

Table III - Type A, class 1 cooler materials (cont'd.).

Part	Material	Applicable document
Pipe plugs and adaptors:		
For all services	Nickel-copper-alloy; or copper-nickel-alloy, composition 70-30 Copper-Nickel-alloy, alloy 715	QQ-N-281 MIL-C-15726 ASTM B122
For other than salt water service	Copper-aluminum alloy, copper alloy No. 614; or valve bronze; or bronze, tin, sand castings, alloy 903 or 922 copper-nickel-alloy; or nickel-aluminum bronze	QQ-C-465 MIL-B-16541 ASTM B143 MIL-C-15726 MIL-B-24059
Packing rings[3/]	Rubber, synthetic: Classes 1, 2 or 5	MIL-G-1149
O-ring gaskets	Rubber, synthetic, type I Rubber, synthetic	MIL-G-21610 MIL-P-5510

[1/] Inspection covers including "zinc covers" shall be of the same copper alloy as the waterboxes to which fitted.

[2/] For double tube sheet construction, additional materials for inner tube sheets are copper-aluminum alloys, copper alloy Nos. 613 and 614, conforming to QQ-C-450 and copper-nickel-alloy, composition 90-10 in accordance with MIL-C-15726.

[3/] See 3.2.25.

3.3.1.2 Type A, class 2 coolers shall be constructed of the materials specified in table IV.

Table IV - Type A, class 2 cooler materials.

Part	Material	Applicable document
Shells	Copper-nickel-alloy, composition 90-10; tubing, copper-nickel-alloy composition 90-10 Copper-nickel-alloy; Copper-nickel-alloy, annealed temper; Copper-aluminum alloy, copper alloy No. 614; Brass, seamless tube, copper alloy No. 230, light anneal; Copper, rolled; Bronze, tin, sand castings, alloys 905 or 922; or Bronze, nickel-aluminum	MIL-C-15726 MIL-T-16420 ASTM B402 ASTM B151 QQ-C-450 ASTM B135 ASTM B152 ASTM B143 MIL-B-24480
Waterboxes[1/]	Copper-nickel-alloy, composition 70-30 Tubing copper-nickel-alloy, composition 70-30 Copper-nickel-alloy, composition 70-30; or Bronze, nickel-aluminum	MIL-C-15726 MIL-T-16420 MIL-C-20159 MIL-B-24480
Tube sheets[2/]	Copper-nicke- alloy, composition 70-30; or Copper-aluminum alloy, copper alloy No. 628; or Bronze, Nickel-aluminum, alloy No. 630	MIL-C-15726 QQ-C-450 QQ-C-465
Tubes	Copper-nickel-alloy, composition 70-30	MIL-T-15005
Other tubes, for double tube construction	Nonferrous	

See footnotes at end of table.

Downloaded from http://www.everyspec.com

Table IV - Type A, class 2 cooler materials (cont'd).

Part	Material	Applicable document
Fins	Nonferrous	--------
Gland rings and lantern rings	Bronze, tin, centrifugal castings, alloy 903 or 922; or Bronze, tin, sand castings, alloy 903 or 922; Copper-nickel-alloy	ASTM B271 ASTM B143 MIL-C-15726
Baffles	Copper-nickel-alloy; or Brass; or Brass, leaded, copper alloy No. 356; or Brass, copper alloy No. 260	MIL-C-15726 QQ-B-613 ASTM B121 ASTM B36
Spacers	Copper-Nickel-Alloy; or Brass, red, copper alloy No. 230; or Metal, admiralty, copper alloy Nos. 443, 444, or 445	MIL-C-15726 ASTM B111 ASTM B111
Spacer rods and spacer nuts	Copper-nickel-alloy; or Brass, leaded, copper alloy No. 356; or Brass, copper alloy No. 360	MIL-C-15726 ASTM B121 ASTM B16
Bolts, studs and nuts: For salt water side For other service	Nickel-copper-alloy Copper-aluminum alloy, copper alloy No. 614 phosphor bronze; or copper-silicon alloy	QQ-N-281 QQ-C-465 QQ-B-750 QQ-C-591
Jack screws	Copper-aluminum alloy, copper alloy No. 614; or phosphor bronze; or copper-silicon alloy	QQ-C-465 QQ-B-750 QQ-C-591
Zinc protectors	Zinc	MIL-A-18001
Plugs, zinc support	Copper-nickel-alloy, alloy 715 Nickel-copper-alloy	ASTM B122 QQ-N-281
Gaskets[3/]	Rubber, synthetic, cloth insertion; or asbestos, compressed	HH-P-151 MIL-A-17472
Washers	Copper-aluminum alloy, copper alloy No. 614; or brass, naval	QQ-C-450 QQ-B-639
Pipe plugs and adaptors: For all services For other than salt water service	Nickel-copper-alloy; or copper-nickel-alloy, composition 70-30 Copper-nickel-alloy, alloy 715 Copper-aluminum alloy, copper alloy No. 614; or valve bronze; or bronze, tin, sand castings, alloy 903 or 922 copper-nickel-alloy; or nickel-aluminum bronze	QQ-N-281 MIL-C-15726 ASTM B122 QQ-C-465 MIL-B-16541 ASTM B143 MIL-C-15726 MIL-B-24059

See footnotes at end of table

Downloaded from http://www.everyspec.com

Table IV - Type A, class 2 cooler materials (cont'd).

Part	Material	Applicable document
Packing rings[3/]	Rubber, synthetic: classes 1, 2 or 5	MIL-G-1149
O-ring gaskets	Rubber, synthetic, type I Rubber, synthetic	MIL-G-22610 MIL-P-5510

[1/] Inspection covers including "zinc covers" shall be of the same copper alloy as the waterboxes to which fitted.

[2/] For double tube sheet construction, additional materials for inner tube sheets are copper-aluminum alloys, copper alloy Nos. 613 and 614, conforming to QQ-C-450 and copper-nickel-alloy, composition 90-10 in accordance with MIL-C-15726.

[3/] See 3.2.25.

3.3.1.3 Type A, class 3 coolers shall be constructed of the materials specified in table V.

Table V - Type A, class 3 cooler materials.

Part	Material	Applicable document
Shells	Copper-nickel-alloy, composition 90-10; tubing, copper-nickel-alloy, composition 90-10 Copper-nickel-alloy; Copper-nickel-alloy, annealed temper; Copper-aluminum alloy, copper alloy No. 614; Brass, seamless tube, copper alloy No. 230, light anneal; Copper, rolled; Bronze, tin, sand castings, alloy 905 or 922; or Bronze, nickel-aluminum	MIL-C-15726 MIL-T-16420 ASTM B402 ASTM B151 QQ-C-450 ASTM B135 ASTM B152 ASTM B143 MIL-B-24480
Waterboxes[1/]	Copper-nickel-alloy Tubing, copper-nickel-alloy Copper-nickel-alloy Bronze, nickel-aluminum; or Bronze, sand castings, alloy 905 or 922	MIL-C-15726 MIL-T-16420 MIL-C-20159 MIL-B-24480 ASTM B143
Tube sheets[2/]	Copper-nickel-alloy, composition 90-10 Aluminum-bronze, copper alloy 628; or Bronze, Nickel-aluminum, alloy No. 630	MIL-C-15726 ASTM B171 QQ-C-465
Tubes Outer tubes, for double tube construction	Copper-nickel-alloy, composition 90-10 Nonferrous	MIL-T-15005 ----------
Fins	Nonferrous	--------
Gland rings and lantern rings	Bronze, tin, centrifugal casting alloy 903 or 922; or Bronze, tin, sand castings, alloy 903 or 922; or Copper-nickel-alloy	ASTM B271 ASTM B143 MIL-C-15726

See footnotes at end of table.

Downloaded from http://www.everyspec.com

Table V - Type A, class 3 cooler materials (cont'd).

Part	Material	Applicable document
Baffles	Copper-nickel-alloy; or Brass, leaded, copper alloy No. 356; or Brass, copper alloy No. 260; or Brass	MIL-C-15726 ASTM B121 ASTM B36 QQ-C-613
Spacers	Copper-Nickel-Alloy; or Brass, red, copper alloy No. 230; or Metal, admiralty, copper alloy Nos. 443, 444, or 445	MIL-C-15726 ASTM B111 ASTM B111
Spacer rods and spacer rod nuts	Copper-nickel-alloy; or Brass, leaded, copper alloy No. 356; or Brass, copper alloy No. 360	MIL-C-15726 ASTM B121 ASTM B16
Bolts, studs, nuts and jack screws	Nickel-copper-alloys Copper-nickel-alloy Copper-aluminum alloy, copper alloy No. 614; phosphor bronze; or copper-silicon alloy	QQ-N-281 MIL-C-15726 QQ-C-465 QQ-B-750 QQ-C-591
Zinc protectors	Zinc	MIL-A-18001
Plugs, zinc support	Copper-nickel-alloy, alloy 715 Nickel-copper-alloy	ASTM B122 QQ-N-281
Gaskets[3]	Rubber, synthetic, cloth insertion; or asbestos, compressed	HH-P-151 MIL-A-17472
Washers	Copper-aluminum alloy, copper alloy No. 614; or brass, naval	QQ-C-465 QQ-B-639
Pipe plugs and adaptors: For all services For other than salt water service	Nickel-copper-alloy; copper-nickel-alloy; Bronze, tin, sand castings, alloy 903 or 922; Copper-nickel-alloy, alloy 715 Copper-aluminum alloy, copper alloy No. 614 Nickel-aluminum bronze	QQ-N-281 MIL-C-15726 ASTM B143 ASTM B122 QQ-C-465 MIL-B-24059
Packing rings[3]	Rubber, synthetic: classes 1, 2 or 5	MIL-G-1149
O-ring gaskets	Rubber, synthetic, type I Rubber, synthetic	MIL-G-21610 MIL-P-5510

[1] Inspection covers including "zinc covers" shall be of the same copper alloy as the waterboxes to which fitted.

[2] For double tube sheet construction, additional materials for inner tube sheets are copper-aluminum alloys, copper alloy numbers 613 and 614, conforming to QQ-C-450 and copper-nickel-alloy, composition 90-10 in accordance with MIL-C-15726.

[3] See 3.2.25.

3.3.1.4 Type A, class 4 coolers shall be constructed of the materials specified in table VI.

Downloaded from http://www.everyspec.com

Table VI - Type A, class 4 cooler materials.

Part	Material	Applicable document
Shells	Copper-nickel-alloy, composition 90-10; tubing, copper-nickel-alloy, composition 90-10; Copper-nickel-alloy; Copper-nickel-alloy, annealed temper; Copper-aluminum alloy, copper alloy No. 614; Brass, seamless tube, copper alloy No. 230, light anneal; Copper, rolled; Bronze, tin, sand castings, alloys 905 or 922; or Bronze, nickel-aluminum	MIL-C-15726 MIL-T-16420 ASTM B402 ASTM B151 QQ-C-450 ASTM B135 ASTM B152 ASTM B143 MIL-B-24480
Waterboxes	Copper-nickel-alloy Tubing, copper-nickel-alloy Copper-nickel-alloy Bronze, nickel-aluminum; or Aluminum bronze, alloy 954 as cast, or alloy 952 Bronze, sand castings, alloy 905 or 922	MIL-T-15726 MIL-T-16420 MIL-C-20159 MIL-B-24480 QQ-C-390 ASTM B143
Tube sheets	Copper-nickel-alloy Copper-aluminum-alloy, copper alloy 613, 614 or 628 Naval Brass Bronze, Nickel-aluminum, alloy No. 630	MIL-C-15726 QQ-C-450 QQ-B-639 QQ-C-465
Tubes	Copper-nickel-alloy, composition 90-10 Admiralty metal	MIL-T-15005 WW-T-756
Fins	Nonferrous	--------
Gland rings and lantern rings	Bronze, tin, centrifugal castings, alloy 903 or 922; or Bronze, tin, sand castings, alloy 903 or 922; Copper-nickel-alloy	ASTM B271 ASTM B143 MIL-C-15726
Baffles	Copper-Nickel-alloy Brass, leaded, copper alloy No. 356; or Brass; or Brass, copper alloy No. 260	MIL-C-15726 ASTM B121 QQ-B-613 ASTM B36
Spacers	Copper-Nickel-alloy; or Brass, red, copper alloy No. 230; or Metal, admiralty, copper alloy Nos. 443, 444, or 445	MIL-C-15726 ASTM B111 ASTM B111
Spacer rods and spacer rod nuts	Copper-Nickel-alloy; or Brass, leaded, copper alloy No. 356; or Brass, copper alloy No. 360	MIL-C-15726 ASTM B121 ASTM B16
Bolts, studs and nuts	Nickel-copper-alloy; Copper-nickel alloy; or Copper-aluminun alloy, copper alloy number 614	QQ-N-281 MIL-C-15726 QQ-C-465
Jack screws	Copper-aluminum alloy, copper alloy number 614; or Phosphor bronze; or Copper-silicon alloy	QQ-C-465 QQ-B-750 QQ-C-591

See footnote at end of table.

Downloaded from http://www.everyspec.com

#

Table VI - Type A, class 4 cooler materials (cont'd).

Part	Material	Applicable document
Gaskets[1/]	Rubber, synthetic, cloth insertion; or asbestos, compressed	HH-P-151 MIL-A-17472
Washer	Copper-aluminum alloy, copper alloy number 614; or Brass naval	QQ-C-465 QQ-C-639
Pipe plugs and adaptors	Nickel-copper-alloy; copper-nickel-alloy Nickel-aluminum bronze Copper-aluminum alloy, copper alloy number 614 Copper-Nickel-alloy, alloy 715	QQ-N-281 MIL-C-15726 MIL-B-24059 QQ-C-465 ASTM B122
Packing rings[1/]	Rubber, synthetic: classes 1, 2 or 5	MIL-G-1149
O-ring gaskets	Rubber, synthetic, type I Rubber, synthetic	MIL-G-21610 MIL-P-5510

[1/] See 3.2.25.

3.3.1.5 Type A, class 5 coolers shall be constructed of any of the materials specified in table VI or those specified in table VIII.

#

Table VII - Additional type A, class 5 cooler materials.

Part	Material	Applicable document
Waterboxes	Aluminum-bronze, alloy 954 as cast or alloy 952	QQ-C-390
Tube sheets	Naval brass, copper alloy 464 Copper-aluminum alloy, copper alloy No. 613 Aluminum bronze D, copper alloy No. 614 Leaded muntz metal, copper alloy No. 365	ASTM B171 QQ-C-450 ASTM B171 ASTM B171
Tubes	Admiralty metals B, C and D, copper alloys Nos. 443, 444 and 445 Red brass, copper alloy No. 230	ASTM B111 ASTM B111

3.3.1.6 Use of steel material for the shell side of lubricating oil and hydraulic oil coolers. For lubricating oil and hydraulic oil cooling applications the shell side of coolers may be constructed of the materials specified in table VIII (see 6.1.1).

#

Table VIII - Optional shell side materials for oil cooling applications.

Part	Material	Applicable document
Shell	Steel pipe Seamless carbon steel pipe, grade B; Steel plate, grade C; Seamless drawn steel tubing; Steel plate, hull structural, type 1, grade M Cast steel Carbon steel plate	ASTM A53 ASTM A106 ASTM A285 MIL-T-20157 MIL-S-16113 MIL-S-15083 ASTM A515
Flanges	Carbon steel plate Steel plate, grade C Cast steel Steel pipe flange	ASTM A515 ASTM A285 MIL-S-15083 ASTM A181

Downloaded from http://www.everyspec.com

Table VIII - Optional shell side materials for oil cooling applications (cont'd).

Part	Material	Applicable document
Shell supports	Carbon steel plate Cast steel, grade B Steel plate, grade C	ASTM A515 MIL-S-15083 ASTM A285
Tube, outer	Brass, class A Steel	MIL-T-20168 MIL-T-20157
Tube sheet, inner	Steel plate, grade C	ASTM A285
Baffles	Steel plate, hull structural, type 1, grade M Steel plate grade C Steel plate Steel plate Steel Steel plate, class 1018 or 1020	MIL-S-16113 ASTM A285 ASTM A515 ASTM A516 ASTM A569 QQ-S-631
Stay rods	Carbon steel, bolt material, grade 2 or 5	MIL-B-857
Nuts	Steel	MIL-B-857
Spacers	Steel	MIL-T-20157

3.3.1.7 Use of aluminum shell side internals for lubricating oil and hydraulic oil coolers. For lubricating oil and hydraulic oil cooling applications, the shell side internal parts of coolers may be of the materials specified herein or those specified in table IX (see 6.1.1).

Table IX - Optional materials for shell side internal parts for oil cooling applications.

Part	Material	Applicable document
Baffles	Aluminum, alloy 2024-T3	ASTM B209
Spacers	Aluminum, alloy 6061-T6	ASTM B241
Tie rods	Aluminum, alloy 6061-T6	ASTM B211
Tie rod nuts	Aluminum, alloy 6062-T9	ASTM B211

3.3.1.8 Materials for heat exchangers cooling synthetic lubricating oil. For certain applications, the requirement exists that the oil side of a synthetic lubricating oil cooler shall contain no material which has more than five percent copper except nickel-copper material. Therefore, when specified in 6.1.1, the cooler shall be made of the materials specified in table X.

Table X - Materials for synthetic lubricating oil cooling.

Part	Material	Applicable document
Shells	Steel pipe Seamless carbon steel pipe, grade b; steel plate, grade C; cast steel Carbon steel plate	ASTM A53 ASTM A106 ASTM A285 MIL-S-15083 ASTM A515
Waterboxes[1/] For submarine salt water service	Copper-nickel-alloy composition 70-30 Copper-nickel-alloy, composition 70-30 Bronze, nickel-aluminum	MIL-C-15726 MIL-C-20159 MIL-B-24480

See footnotes at end of table

Downloaded from http://www.everyspec.com

Table X - Materials for synthetic lubricating oil cooling (cont'd).

Part	Material	Applicable document
For other services	Copper-nickel-alloy, composition 90-10 Copper-nickel-alloy, composition 90-10 Bronze, nickel-aluminum Bronze, tin, sand castings, alloys 905 or 922	MIL-C-15726 MIL-C-20159 MIL-B-24480 ASTM B143
Tube sheets[2]	Nickel-copper-alloy, class A	QQ-N-281
Tubes[3]	Nickel-copper-alloy, type I, condition 1	MIL-T-1368
Gland rings and lantern rings	Steel plate, grade C; Steel plate, hull structural, type I grade M	ASTM A285 MIL-S-16113
Baffles	Steel plate, grade C; Steel plate, hull structural, type 1, grade M Steel plate Steel Plate Steel Steel plate, class 1018 or 1020	ASTM A285 MIL-S-16113 ASTM A515 ASTM A516 ASTM A569 QQ-S-631
Spacers	Steel tubing	ASTM A214
Spacer rods	Carbon steel bolt material, grade 2 Steel rod, class 1018 or 1020	MIL-B-857 QQ-S-631
Spacer rod nuts	Carbon steel bolt material, grade 2 or 5 Steel	MIL-B-857 Commercial
Bolts, studs, and nuts: For salt water service	Nickel-copper-alloy, class A Nickel-copper-aluminum alloy, class A, age hardened Copper-nickel-alloy, alloy 715	QQ-N-281 QQ-N-286 ASTM B122
For other service	Copper-aluminum alloy, copper alloy No. 614; Copper-silicon alloy	QQ-C-465 QQ-C-591
Jack screws	Copper-aluminum alloy, copper alloy No. 614 Phosphor bronze	QQ-C-465 QQ-B-750
Zinc protectors	Zinc	MIL-A-18001
Plugs, zinc support	Copper-nickel-alloy, alloy 715 Nickel-copper-alloy	ASTM B122 QQ-N-281
Gaskets[4]	Rubber, synthetic, cloth, insertion; asbestos, compressed	HH-P-151 MIL-A-17472
Pipe plugs and adaptors: For sea water service	Nickel-copper-alloy; or Copper-nickel-alloy, composition 70-30 Copper-nickel-alloy, alloy 715	QQ-N-281 MIL-C-15726 ASTM B122
For lube oil service	Steel plate, grade C	ASTM A285
Packing rings[4]	Rubber, synthetic, classes 1, 2 or 5	MIL-G-1149
O-ring gaskets	Rubber, synthetic, type I Rubber, synthetic	MIL-G-21610 MIL-P-5510

See footnotes top of next page.

Downloaded from http://www.everyspec.com

1/ Inspection covers including "zinc covers" shall be of the same copper alloy as the waterboxes to which fitted.

2/ For double tube sheet construction, additional materials for inner tube sheets are steel plate, class C conforming to ASTM A285 or steel plate type I, grade M to MIL-S-16113.

3/ For double tube construction, additional material for outer tube is steel tubes to MIL-T-20157.

4/ See 3.2.25.

3.3.2 Cooler tubes shall be seamless. Coolers shall have either straight tubes or U-bent tubes.

3.3.2.1 U-bent tubes. The minimum bending radii for U-tubes shall be as specified in table XI.

Table XI - Minimum radii for bending U-tubes.

Outside tube diameter	Minimum radius of bend (at tube centerline)
Inch	Inch
5/8	15/16
1/2	13/16
3/8	5/8
1/4	1/2

After bending, tubes shall maintain the round cross section. The bending procedure shall be qualified to the satisfaction of the cognizant inspector by production of sample tube bends. The inspector may require the samples to be sectioned in order to determine compliance with these requirements.

3.3.3 The following types of shell end construction will be acceptable (see 3.3.4):

(a) Ring flange, drilled for bolting of tube sheets and bonnet (as applicable) thereto, with shell welded to or cast integral with, the flange.

(b) Additionally for hydraulic oil cooling and other applications where double tube construction is specified (see 6.1.1) shell flange omitted, shell welded to tube sheet.

3.3.4 Cooler end construction.

3.3.4.1 Submarine cooler applications (except type A, class 4 applications not exceeding 150 psig). Except for hydraulic oil cooling applications and other applications where double tube construction is specified (see 6.1.1) the design shall incorporate a removable tube bundle with a stationary tube sheet at the front end of the cooler. The removable feature may be achieved by use of U-bend tube construction or by use of straight tube construction in conjunction with a floating tube sheet at the rear end of the cooler. Standard construction for these coolers shall conform to the following:

(a) Front end construction:
  (1) Full face gasketed joint for the tube sheet to shell flange; full face gasketed joint for the waterbox-to-tubesheet joint; tubesheet secured to shell flange by use of collar studs, or studs threaded into the tubesheet, so that the tubesheet to shell flange joint can withstand shell side hydrostatic test with the waterbox disassembled.
  (2) Full face gasketed joint for the tubesheet-to-shell flange with independent bolting ring; reduced diameter stationary tubesheet-to-waterbox flange gasketed joint secured by independent bolting ring.

(b) Rear end construction when floating tube sheet design is elected shall be as follows: The waterbox shall be attached to the floating tube sheet by means of a ring of studs, set in the face of the tube sheet, and used to make up a gasketed joint between waterbox and sheet. The seal between shell and floating tube sheet shall be accomplished by the following construction; a counterbore in the shell end flange -

Downloaded from http://www.everyspec.com

this forming one side and the bottom of a stuffing box to receive rubber packing rings, the perimeter on the floating tube sheet or an extension thereof forming the other side, and gland with a bolting ring bolted to the shell flange for take-up being used to develop needed compression on the packing rings. This rear end construction is shown on figure 1.

3.3.4.2 Submarine cooler (type A, class 4, not exceeding 150 psig) and surface ship cooler applications. Except for hydraulic oil cooling and other applications where double tube construction is specified (see 6.1.1), the design shall incorporate a removable tube bundle with a stationary tube sheet at the front end of the cooler. The removable feature may be achieved by use of U-bend tube construction or by use of straight tube construction in conjunction with a floating tube sheet at the rear end of the cooler. Standard construction for these coolers shall conform to the following:

(a) Front end construction:
(1) Full face flat gasketed joint for the tube sheet-to-shell flange; full face flat gasketed joint for the waterbox-to-tube sheet joint; tube sheet secured to shell flange by use of collar studs, or studs threaded into the tube sheet, so that the tube sheet-to-shell flange joint can withstand shell side hydrostatic test with the waterbox disassembled. When U-bent tube construction is elected, all the fasteners of the bolting ring shall be of one of the types described above; when floating tube sheet construction is elected, not less than 50 percent of them shall be of such construction.

(b) Rear end construction when floating tube sheet design is elected shall be as follows:
(1) The shell and waterbox flanges shall each be counterbored to retain one or more integral packing rings. A lantern ring shall be located between the respective (sets of) packing rings. This lantern ring shall have a groove around the inside and leak-off holes arranged so that leakage past the packing ring (from either the shell or the waterbox) will be relieved to the outside. The waterbox-to-shell bolting will serve to compress this double packed joint. When this packed lantern ring construction is used, a test ring shall be provided so designed that hydrostatic testing of the shell side can be accomplished with the rear waterbox removed. This rear end construction is shown on figure 2.
(2) The shell and waterbox flanges shall have a packing gland retaining ring manufactured onto them which will be used to hold one or more integral packing rings in place. A lantern ring shall be located between the respective (sets of) packing rings. This lantern ring shall have a groove around the inside and leak-off holes arranged such that leakage past the packing ring from either the shell side or waterbox side will be relieved to the outside. The waterbox-to-shell bolting will serve to compress this double packing joint. When this construction is selected, no test ring will be required since the waterbox stud bolts will be threaded into the lantern ring and this lantern ring will therefore remain in place after the waterbox is removed. This rear end construction is shown on figure 3.

(c) As a special construction for these coolers, units may be designed with the special feature of coolant flow paths led via shell, with coolant piping connections integral with shell; the stationary tube sheet being of reduced diameter relative to shell and bonnet flanges, but with joint configuration such that both waterbox and shell will limit lateral motion of the stationary tube sheet. A test ring shall be supplied which will allow testing of the shell side with the stationary waterbox removed.

(d) As special construction for these coolers, any of the constructions permitted for submarine coolers may be used. For hydraulic oil cooling and other applications for which double tube construction is specified (see 3.3.4.3).

Downloaded from http://www.everyspec.com

3.3.4.3 For hydraulic oil cooling applications and other applications for which double tube construction is specified: for these coolers the method of 3.3.3(b) shall be used to attach the shell to the tubesheets. The coolers shall be of the following construction:

(a) Shells shall be of fabricated construction. Straight tubes shall be used. When the tube bundle effective length (back to back of tube sheets) is greater than 18 inches, a shell expansion joint shall be provided to compensate for expansion differential between shell and tubes. This joint shall be located outboard of the shell supports and shall be designed to withstand lateral high impact shock. Stuffing box type joints will not be acceptable.

3.3.5 Hydraulic oil coolers. For application as hydraulic oil coolers, coolers shall be of the fixed bundle straight tube type described in 3.3.4.3 and shall incorporate the double tube sheet feature of 3.3.6 and the double tube feature of 3.3.7. Cadminum plating shall not be used on any part of the cooler which may come in contact with hydraulic fluid.

3.3.6 Double tube sheet construction (cyclic loading not specified). For hydraulic oil coolers and when specified (see 6.1.1), for other coolers, two tube sheets shall be provided at each end of the cooler. A space between the two sheets shall be provided by use of a spacing ring or by machining one or both sheets. The joint between the sheets or the joints between sheets and ring shall be welded. (For guidance figures 3 and 4 shows two acceptable methods of welding tube sheets). The space between the tube sheets shall be vented and drained to atmosphere. The tubes shall be expanded into each tube sheet as provided in 3.3.9.3 and care shall be taken that the discontinuity in tube surface caused by the expansion is kept to a minimum. After expansion of the tubes, the specified tube side hydrostatic test pressure shall be applied to the spaces between the two tube sheets at each end, and there shall be no leakage under this pressure. For the case of double tube sheet construction subject to cyclic loading, (see 3.3.15).

3.3.7 Double tube construction. For hydraulic oil coolers and when specified for other coolers (see 6.1.1), a double tube construction shall be combined with fixed bundle construction and double tube sheet construction. When this combination is used provision shall be made for a "telltale" system for revealing leakage. Outer tubes shall be joined to the inner tube sheets by expanding, welding, or silver brazing. These outer tubes shall have their internal surfaces longitudinally grooved in such a way that, after the inner tubes are expanded tightly into the outer tubes, there will be adequate contact between the two tubes to conduct heat, and the multiple grooves will readily lead off leakage from any perforation of an inner tube to the end of the compartments formed between outer and inner tube sheets. Each of the end compartments shall be provided with vent and leak-off connections. Visual means will be provied for readily detecting leakage through the use of a telltale system leading from the leak-off connections of each end compartment. An instruction plate conforming to MIL-P-15024 and MIL-P-15024/5 shall be provided to indicate the function of these connections and to warn against improper plugging of them. This plate shall be located close to one of the leak-off connections. Inner tubes shall have one of the nominal outside diameters specified below with corresponding wall thickness and shall be sized for rolling into the outer tube sheets with a standard expander. After assembly, the specified tube side hydrostatic test pressure shall be applied to the end compartments and leakage warning passages, and there shall be no leakage under this pressure.

3.3.8 When specified (see 6.1.1), as for some electronics cooling applications and for submarine battery cooling, the shell side shall be completely tinned by electroplating or by dipping. (NOTE: When copper nickel material is used, tinning is not required). The tin shall be applied to the following:

(a) Inside surface of shell assembly.
(b) Outside surface of tubes.
(c) Baffles, support plates, and tie rods and nuts.
(d) Exposed surfaces of tube sheets and spacers.

The directly exposed parts shall be tinned to a thickness of from 0.001 to 0.0015 inch. Plating shall be smooth and of fine grain appearance, absolutely free from "burnt" deposits such as occur in high-current-density areas.

3.3.9 Tubes.

3.3.9.1 Tube sizes.

Downloaded from http://www.everyspec.com

3.3.9.1.1 Submarine coolers designed for use of salt water as coolant shall be provided with tubes of 5/8-inch outside diamter, 0.065-inch (number 16 Birmingham wire gage (BWG)) wall thickness; 1/2-inch outside diamter, 0.049-inch (number 18 BWG) wall thickness; or 3/8-inch outside diameter, 0.049-inch (number 18 BWG).

3.3.9.1.2 Surface ship coolers designed for use of salt water as coolant shall be provided with tubes of 5/8-inch outside diameter, 0.049-inch (number 18 BWG) wall thickness; 1/2-inch outside diameter, 0.049-inch (number 18 BWG) wall thickness; 3/8-inch outside diameter, 0.049-inch (number 18 BWG) wall thickness subject to the following restriction:

(a) The 5/8-inch outside diameter size shall be used for lubricating oil coolers for main propulsion turbine units using scoop injection of circulating water.

3.3.9.1.3 Coolers designed for use of fresh water as coolant shall be provided with tubes of 5/8-inch outside diameter, 0.049-inch (number 18 BWG) wall thickness; 1/2-inch outside diameter, 0.049-inch (number 18 BWG) wall thickness; 3/8-inch outside diameter, 0.035-inch (number 20 BWG) wall thickness; or 1/4-inch outside diamter, 0.028-inch (number 22 BWG) wall thickness.

3.3.9.1.4 The contract or order may specify a tube size in accordance with 3.3.9, or the choice among those standard sizes may be left to the discretion of the vendor (see 6.1.1). For applications in which a tube wall thickness greater than those specified in 3.3.9.1.1, 3.3.9.1.2 and 3.3.9.1.3 is mandatory, the contract or order shall specify the required thickness (see 6.1.1).

3.3.9.2 Fins. The use of fins is permissible on the outer tube of double tube design coolers. The use of fins on single tube design coolers shall be in accordance with one of the constructions specified in 3.3.9.2.1 and 3.3.9.2.2.

3.3.9.2.1 Integral fins. Tubes shall be of the low fin type with fins worked out of the tube wall in such a way that the od of the fins does not exceed the od of the plain ends of the tubes. The tube wall at the fin root shall be not less than the thickness specified in 3.3.9.1. The tube wall at the plain end shall be two BWG sizes heavier than the wall thickness specified in 3.3.9.1, to permit the use of a standard tube expander.

3.3.9.2.2 Applied fins. Tubes shall be of the low fin type. One end of the tube shall be gradually enlarged to slightly more than the od of the fins. This will permit removal and replacement of individual tubes. The enlarged end shall be the discharge end of the tube. The holes in the tube sheets for these enlarged tube ends shall be reamed 0.001 inch larger than the outside diameter of the tube end, with a plus 0.002 inch tolerance, and the nominal ligament between the tube holes shall not be less than 3/16 inch. (Attention is called to the requirements of MIL-T-15005 for tubes enlarged at one end.)

3.3.9.3 Tubes of all coolers shall be expanded into the tube sheets at both ends except as permitted in 3.3.7. The expansion shall be done by means of a tube expander in accordance with MIL-E-15809 and shall be governed by an automatic tube expander control. The expanded portion of the tube-to-tube sheet joint shall not approach closer than 1/8 inch to the back face of single or outer tube sheets or closer than 1/8 inch to either face of inner tube sheets (double tube sheet construction). The minimum depth of expansion of tubes shall be as specified in table XII.

Table XII - Minimum depth of expansion.

Tube outside diameter	Minimum depth of expansion
Inch	Inch
5/8	5/8
1/2	5/8
3/8	1/2
1/4	3/8

3.3.10 Tube sheets.

3.3.10.1 Minimum thickness. Tube sheet minimum thickness shall be not less than:

(a) For joints with inlet end flare (see 3.3.10.3) - Depth of expansion plus depth of flare plus 1/8 inch.

Downloaded from http://www.everyspec.com

(b) For non-flared joints - Depth of expansion plus 1/8 inch.
(c) For inner tube sheets - Depth of expansion plus 1/4 inch.

3.3.10.2 Holes for tubes in tube sheets shall be spaced, center to center of the holes, and reamed to diameters shown in table XIII.

#

Table XIII - Spacing and diameter of holes.

Tube outside diameter	Minimum tube spacing 1/	Diameter of holes for tubes 2/ (other than when tinning of shell side is specified)	Diameter of holes for tubes 2/ (when tinning of shell side is specified)
Inch	Inch	Inch	Inch
5/8	13/16	0.626	0.631
1/2	21/32	.503	.508
3/8	1/2	.376	.381
1/4	11/32	.251	.256

1/ A tolerance of plus 0.015 inch or minus 0.017 on the nominal ligament thickness will be permitted.
2/ A tolerance of minus 0.000, plus 0.005 inch will be permitted. A maximum of 1 percent (to the nearest hole) of the tube holes in each tube sheet may range to plus 0.010 inch providing two over sized holes are not adjacent and the ligament thickness requirements are maintained.

3.3.10.3 The holes for the inlet ends of the tubes shall be flared in accordance with table XIV to allow for belling the ends of the tubes.

#

Table XIV - Flaring of holes for inlet ends.

Tube outside diameter	Radius of flare	Diameter of flare, at outside face of tube sheet
Inch	Inch	Inch
5/8	1/2	3/4
1/2	3/8	5/8
3/8	5/16	1/2
1/4	No flare required: edge shall be rounded as required by 3.3.10.5	

3.3.10.4 Grooving of holes in tube sheets. The holes for tubes in the tube sheets shall be grooved in accordance with table XV.

#

Table XV - Grooving of holes in tube sheets.

Tube size	Cooler application	Number of grooves in outer tube sheet	Number of grooves in inner tube sheet	Width of groove	Depth of groove	Space between grooves
				Inch	Inch	Inch
5/8 inch od and 1/2 inch od	Submarine cooler with single tube sheets and designed for submergence pressure	3	------	1/16	0.012	1/8
	Submarine cooler with double tube sheets and designed for submergence pressure	3	1	1/16	.012	1/8
	Other coolers with single tube sheets	1	------	0.025	.007	---
	Other coolers with double tube sheets	1	None	.025	.007	---
3/8 inch od	Submarine cooler with double tube sheets and designed for submergence pressure	2	1	1/16	.012	1/8
	Other coolers	None	None	----	----	---

See notes at top of next page.

Downloaded from http://www.everyspec.com

NOTES:

1. No grooving is required for 1/4 inch od tubes.
2. With the double tube construction of 3.3.7 no grooving of the inner sheet is required when a welded or brazed joint is elected for the outer tube-to-inner tube sheet attachment.
3. When the outer tube sheet is to be grooved, the first groove shall be located 3/8 inch from the front face of the sheet.
4. When the inner tube sheet is to be grooved, the groove shall be located at the expanded portion of the joint.

3.3.10.5 The edges of the holes for tubes shall be rounded in accordance with table XVI, except where a flared contour is required for the tube inlet end.

#

Table XVI - Edges of the holes for tubes.

Tube outside diameter	Edge of hole rounded to a radius of
Inch	Inch
5/8	1/16
1/2	1/16
3/8	1/16
1/4	1/32

3.3.11 The inlet ends of 5/8, 1/2, or 3/8 od tubes shall be expanded and belled and the ends shall then be finished flush with the face of the tube sheet. Inlet ends of 1/4 inch od tubes shall not be belled, but after expansion shall be finished flush with the face of the tube sheet. In no case shall the ends of tubes be below the face of the tube sheets. Discharge ends of tubes shall not protrude more than 1/16 inch beyond the face of the tube sheet.

3.3.12 Baffles. Within the shell space, close fitting transverse baffles shall be installed to provide for multiple passes of the shell side fluid across the tubes and to furnish support to the tubes. The segmental type of baffle shall be used. Baffles shall have a finish of 250 rms or better on the periphery including the cut edge. The baffles shall be held in postion by tie rods and spacer sleeves. The tie rods shall be threaded into but not through one of the tube sheets. Where one sheet is the floating type, the tie rod shall be assembled to the stationary sheet. Holes for tubes in baffles shall be not more than 1/64 inch greater (nominal diameter) than the diameter of the tube. Edges of holes shall have all roughness removed.

3.3.12.1 Baffles thicknesses shall be in accordance with TEMA "C" requirements except when low finned tubes are used, the minimum baffle thickness shall be 1/8 inch.

3.3.12.2 Baffles shall be so spaced that the unsupported tube spans do not exceed the values required by TEMA "C". (For the case of the baffles adjacent to the bends of U-bend tube exchangers, the unsupported length is defined as the sum of the bend diameter plus the straight lengths measured along both legs from supports to bend tangents.)

3.3.12.3 In order to enhance cooler performance, the installation of sealing strips between the tube bundle and shell will be permitted (these strips can be installed in slots in the baffles and tack welded).

3.3.13 Waterboxes. In order to allow distribution of coolant to the tubes, the water-box depth measured normal to the tube sheet shall be not less than one-half the mean diameter of the tube sheet area exposed to the flow of the cooling water into the tubes. For coolers having an equivalent inside shell diameter "D" the waterbox head depth shall be not less than 0.50D for single pass coolers, 0.354D for two pass coolers and 0.25D for four pass coolers. For multipass coolers, preferred construction shall be for coolant to flow horizontally or vertically upward between passes, with vent holes being provided in the waterbox partitions.

3.3.13.1 Waterbox pass partition plate width shall be not less than 1/4 inch at the gasket contact surface.

3.3.13.2 Jack screws shall be fitted on the waterboxes of coolers of 12 inch and above nominal shell diameter.

Downloaded from http://www.everyspec.com

3.3.13.3 Zinc protectors. The fitting of zinc protectors is not required for fossil fuel powered ships. For nuclear powered ships, the cooling water side of coolers designed for use with sea water as coolant shall be fitted with corrosion preventive anodes ("zinc") in accordance with MIL-A-19521, type I or II, class A.

3.3.14 Cyclic life requirements.

3.3.14.1 For submarine applications subject to submergence pressure (type A, class 1 coolers) the salt water side shall be designed to withstand a cyclic loading of 20,000 cycles, each cycle to consist of the transition from "surfaced" condition of the submarine to "test depth" and return to surface. Piping reaction values shall be as follows:

$$\text{Piping axial load} = \pi r_m \; t \left(S_y - \frac{P r_i}{2t}\right)$$

$$\text{Piping bending moment} = 1.3 \pi r_m^2 t \quad S_y - \frac{P r_i}{2t}$$

$$\text{Piping torsional moment} = \pi r_m^2 \; t \sqrt{\left(S_y^2 - \frac{P r_i}{2t}\right)^2}$$

Where

P = design pressure for the component, psi

r_i = pipe inside radius, inches

r_m = pipe mean radius, inches $\left(\frac{r_i + r_o}{2}\right)$

r_o = pipe outside radius, inches

S_y - tabulated value of yield strength of the piping material at the component's design temperature, psi

t = pipe thickness, inches

3.3.14.2 Other cyclic life requirements shall apply when stipulated in the contract or order.

3.3.15 Cyclic life design.

3.3.15.1 When cyclic loading applies, the structure composed of outer and inner tube sheets together with short sections of tubes between paired inner and outer sheets shall be designed to withstand the specified design pressure in combination with the specified piping loads. It shall be the responsibility of the vendor to determine the width of the space between the tube sheets so that the span of the tubes included will be sufficient to prevent the tubes from being overstressed due to radial expansion differentials of the tube sheets under cyclic operating conditions, including start-up, normal operation and shut-down. Conditions of operation shall assume 28°F. and 85°F. inlet circulating water temperature, water velocity as produced by full speed circulating pump operation and the highest fluid temperature condition in the shell resulting from the specified cooler duties. This tube sheet structure shall be capable of withstanding the specified hydrostatic test pressure when applied in the waterbox or between the double tube sheets (see 4.3.2.2). The double tube sheet design shall be in accordance with one of the following:

(a) Bolted and gasketed. The outer tube sheet shall be secured to the inner tube sheet or spacer piece (if furnished) by means of threaded fasteners which shall be of sufficient size and number to maintain tightness of the "O-ring" gasketed joint when the specified design pressure is applied to the space between double tube sheets without dependence on the waterbox flange bolting. The "O-ring" gasket shall be replaceable without necessity for retubing the cooler. The spacer piece (if furnished) shall be welded (full penetration weld) to the inner tube sheet, and this weld may be magnetic particle inspected on the root passes, the back chipped side of the initial root weld, and the surface passes, to the requirements of MIL-STD-278 in lieu of radiographic inspection, if so elected. If materials involved are not

Downloaded from http://www.everyspec.com

magnetic, liquid penetrant inspection of the root passes, the back chipped side of the initial root weld, and the surface passes, to the requirements of MIL-STD-278 may be substituted for radiographic inspection. The structural adequacy of this welded joint shall be justified by analysis.

(b) Completely welded. The outer tube sheet shall be secured to the inner tube sheet by a full penetration butt welded joint which shall maintain the tightness of the assembly when the specified design pressure is applied to the space between the sheets without dependence on the waterbox flange bolting. For providing a sound weld root condition, the use of consumable insert or alternate means (which must be proven satisfactory to NAVSEC) is required. This weld shall be in accordance with class AF of MIL-STD-278 except that, for the case of magnetic material, the weld may be magnetic particle inspected on each weld pass to the requirements of MIL-STD-278 in lieu of being radiographed. If materials involved are not magnetic, liquid penetrant inspection of each weld pass in accordance with MIL-STD-278 shall be substituted for magnetic particle inspection.

3.3.15.2 Waterboxes designed for cyclic loading shall be of hemispherical shape with nozzles alined radially. Piping reaction values shall be as given in 3.3.14.1.

3.3.16 Cyclic life analysis.

3.3.16.1 For applications for which cyclic life requirements are established, an analysis demonstrating the adequacy of the design shall be submitted for review to NAVSEC. For the type A, class 1 coolers, a stress report shall be submitted to NAVSEC for approval. The stress report shall be in a format to facilitate an independent review of its content, it is therefore imperative that it be simple to follow and free from ambiguity and should contain the following as a minimum:

(a) Description of design requirements such as steady state and transient pressures, temperatures, and external loading.
(b) The regions of the component which were analyzed.
(c) The materials which were used and their mechanical properties.
(d) A general description of the methods of analysis and assumptions.
(e) All reference sources shall be listed.
(f) All computer programs shall be properly identified and described.
(g) The report shall contain copies of the computer printouts (input and output).
(h) The stresses shall be tabulated for each area of investigation and compared to the allowable stresses for all stress categories.
(i) Satisfaction of cyclic requirements including stress concentration factors used in the cyclic analysis.

3.3.16.2 Except where other analytical methods are permitted herein all boundaries subject to cyclic loading of type A, class 1 coolers shall be analyzed for specified load combinations (e.g., internal pressure in combination with that piping reaction load that produces the highest stress) in accordance with the methods and criteria of the latest edition (including revisions, addenda, and applicable cases) of Section III of the ASME Boiler and Pressure Vessel Code, class 1 vessels. Design fatigue curves for materials commonly used in fabrication of coolers and design stress intensity values for materials not covered in Section III (class 1 vessels) of ASME Boiler and Pressure Vessel Code shall be obtained from NAVSEC. Method of analysis for flat perforated plates shall be in accordance with Article A-8000 of Section III of ASME Boiler and Pressure Vessel Code.

3.3.16.3 Waterbox nozzle analysis. An acceptable method of calculating local stresses in nozzles at the nozzle-hemisphere intersection (no local reinforcement) resulting from external loading is the computer program CERL-II, "A Computer Program for Analyzing Hemisphere-Nozzle Shells of Revolution with Axisymmetric and Unsymmetric Loading (the computer program source deck is available from NAVSEC, Boiler and Heat Exchanger Section)."

3.3.16.4 Double tube sheet complex analysis. An acceptable method of analysis for calculating nominal stresses in (equivalent solid plates) double tube sheet complexes is the computer program "HYBOS", presented in Franklin Institute Research Laboratory Final Report F-C2438-4, Defense Documentation Center No. AD890717L. (The computer program will be made available upon application to NAVSEC Boiler and Heat Exchanger Section to Naval Activities and contractors engaged in current type A, class 1 submarine cooler design efforts.)

3.4 Type B (fabricated tube design) requirements.

3.4.1 Materials.

Downloaded from http://www.everyspec.com

3.4.1.1 Type B, class 2 coolers (submarine, salt water cooled, salt water side secured below 200 feet submergence) shall be constructed of the materials specified in table XVII.

Table XVII - Type B, class 2 cooler materials.

Part	Material	Applicable document
Casings, fabricated	Copper-nickel-alloy, composition 90-10; or tubing, copper-nickel-alloy, composition 90-10	MIL-C-15726 MIL-T-16420
Casings, cast, and core frames	Copper-nickel-alloy; composition 90-10; or tin bronze, alloy No. 903	Commercial QQ-C-390
Header plates, baffles and reinforcement plates	Copper-nickel-alloy, composition 90-10	MIL-C-15726
Tube halves	Copper-nickel-alloy[1/]	MIL-C-15726
Oil tube centers	Steel, cold rolled	Commercial
Brazing sheets	Electrolytic copper	Commercial
Covers, tube side	Copper-nickel-alloy, composition 90-10; or bronze, tin, sand casting alloy 922 or 903	MIL-C-15726 ASTM B143
Pipe plugs and adaptors	Copper-nickel-alloy, composition 70-30; or Nickel-copper-alloy	MIL-C-15726 QQ-N-281
Packing rings[2/]	Rubber, synthetic, class 1, 2 or 5	MIL-G-1149
Gaskets, flat	Asbestos, compressed	MIL-A-17472
Bolts, studs and nuts: For salt water side	Nickel-copper-alloy, class A	QQ-N-281
For other service	Copper-aluminum alloy, copper alloy No. 614; phosphor bronze; or copper-silicon alloy	QQ-C-465 QQ-B-750 QQ-C-591
Lockwashers: For salt water side	Phosphor bronze; or silicon bronze	FF-W-84
For other service	Steel, electro-tinned or cadmium plated	FF-W-84
Jack screws	Copper-aluminum alloy, copper alloy No. 614; or phosphor bronze; or copper-silicon alloy	QQ-C-465 QQ-B-750 QQ-C-591

[1/] Tube halves shall be formed from a bimetal strip made of an outer layer of composition 90-10, 0.006 inch to 0.009 inch thick clad on a basic layer of composition 70-30. Minimum thickness of the strip shall be 0.020 inch.

[2/] See 3.2.25.

3.4.1.2 Type B, class 3 coolers (surface ship, salt water cooled) shall be constructed of the materials specified in table XVIII.

Downloaded from http://www.everyspec.com

#

Table XVIII - Type B, class 3 cooler materials.

Part	Material	Applicable document
Castings, fabricated	Copper-nickel-alloy, composition 90-10; tubing, copper-nickel-alloy, composition 90-10	MIL-C-15726 MIL-T-16420
Casings, cast, and core frames	Copper-nickel-alloy, composition 90-10; bronze, tin, sand castings alloy 903 or 922	Commercial ASTM B143
Header plates, baffles and reinforcement plates	Copper-nickel-alloy, composition 90-10;	MIL-C-15726
Tube halves	Copper-nickel-alloy[1]	MIL-C-15726
Oil tube centers[2]	Steel, cold rolled	Commercial
Brazing sheets	Electrolytic copper	Commercial
Covers, tube side	Copper-nickel-alloy, composition 90-10; bronze tin, sand castings, alloy 903 or 922	MIL-C-15726 ASTM B143
Pipe plugs and adaptors	Copper-nickel-alloy, composition 90-10; bronze, tin, sand castings, alloys 903 or 922 valve bronze; or copper-aluminum alloy, copper alloy No. 614	MIL-M-15726 ASTM B143 MIL-B-16541 QQ-C-465
Packing rings[3]	Rubber, synthetic, class 1, 2 or 5	MIL-G-1149
Gaskets, flat	Asbestos, compressed	MIL-A-17472
Bolts, studs, nuts and jack screws	Copper-aluminum alloy, copper alloy No. 614 phosphor bronze; or copper-silicon alloy	QQ-C-465 QQ-B-750 QQ-C-591
Lock washers[4]	Steel, electro-tinned or cadmium plated	FF-W-84

1/ Tube halves shall be formed from a bimetal strip made of an outer layer of composition 90-10, 0.006 inch to 0.009 inch thick clad on a basic layer of composition 70-30. Minimum thickness of the strip shall be 0.020 inch.

2/ Where nonmagnetic construction is specified, oil tube centers shall be 70-30 copper-nickel-alloy conforming to MIL-C-15726.

3/ See 3.2.25.

4/ Where nonmagnetic construction is specified lock washers shall be phosphor bronze or silicon-bronze conforming to FF-W-84.

3.4.1.3 Type B, class 4 coolers (submarine, fresh water cooled) shall be constructed of the materials specified in table XIX.

#

Table XIX - Type B, class 4 cooler materials.

Part	Material	Applicable document
Tube halves	Copper-nickel-alloy, alloy No. 710	ASTM B122
All parts not otherwise specified[1]	Copper-nickel-alloy; copper-silicon alloy, wrought: bars, forgings, plates, rods, shapes, sheets and strips; copper-aluminum alloy, copper alloy No. 614 red brass, commercial;	MIL-C-15726 MIL-C-17516 QQ-C-465 ASTM B36 alloy No. 3

See footnotes at end of table

Downloaded from http://www.everyspec.com

Table XIX - Type B, class 4 cooler materials (cont'd)

Part	Material	Applicable document
All parts not otherwise specified[1/] (cont'd)	commercial brass; red, copper alloy No. 230 copper; bronze, tin, sand castings, alloys 903 or 922 valve bronze; brass naval or copper-nickel-alloy, cast, composition 90-10	ASTM B111 QQ-C-576 ASTM B143 MIL-B-16541 QQ-B-639 Commercial
Oil tube centers	Steel, cold rolled	Commercial
Brazing sheets	Electrolytic copper	Commercial
Packing rings[2/]	Rubber, synthetic, class 1, 2 or 5	MIL-G-1149
Gaskets, flat	Asbestos, compressed	MIL-A-17472
Bolts, studs, nuts and jack screws	Nickel-copper-alloy; copper-nickel-alloy; or copper-aluminum alloy, copper alloy No. 614	QQ-N-281 MIL-C-15726 QQ-C-465
Lockwashers	Steel, electro-tinned or cadmium plated	FF-W-84

[1/] Cast casings may be tinned with a 15 percent tin - 85 percent lead solder.

[2/] See 3.2.25.

3.4.1.4 Type B, class 5 coolers (surface ship, fresh water cooled) shall be constructed of the materials specified in table XX.

Table XX - Type B, class 5 cooler materials.

Part	Material	Applicable document
Tube halves	Copper-nickel-alloy, alloy No. 710	ASTM B122
All parts not otherwise specified[1/]	Copper-nickel-alloy; copper-silicon alloy, wrought: bars, forgings, plates, rods, shapes, sheets and strips copper-aluminum alloy, copper alloy No. 614 red brass, commercial; commercial brass, red, copper alloy No. 230 copper; bronze, tin, sand castings, alloys 903 or 922 valve bronze; brass naval; or copper-nickel-alloy, cast, composition 90-10	MIL-C-15726 MIL-C-17516 QQ-C-465 ASTM B36 alloy No. 3 ASTM B111 QQ-C-576 ASTM B143 MIL-B-16541 QQ-B-639 Commerical
Oil tube centers[2/]	Steel, cold rolled	Commercial
Brazing sheets	Electrolytic copper	Commercial
Packing rings[3/]	Rubber, synthetic, class 1, 2 or 5	MIL-G-1149
Gaskets, flat	Asbestos, compressed	MIL-A-17472
Bolts, studs, nuts and jack screws	Nickel-copper-alloy; copper-nickel-alloy; copper-aluminum alloy, copper alloy No. 614 phosphor bronze; or copper-silicon alloy	QQ-N-281 MIL-C-15726 QQ-C-465 QQ-B-750 MIL-C-17516
Lock washers[4/]	Steel, electro-tinned or cadmium plated	FF-W-84

See footnotes top of next page.

Downloaded from http://www.everyspec.com

1/ Cast casings may be tinned with a 15 percent tin - 85 percent lead solder.

2/ Where nonmagnetic construction is specified oil tube centers shall be copper-nickel-alloy conforming to MIL-C-15726.

3/ See 3.2.25.

4/ Where nonmagnetic construction is specified lock washers shall be phosphor-bronze or silicon-bronze conforming to FF-W-84.

3.4.1.5 When specified (see 6.1.1), type B coolers may be fabricated entirely of aluminum alloys, such alloys to be approved by the command or agency concerned.

3.4.1.6 Where nonmagnetic construction is specified (see 6.1.1), all material except the special tube halves shall be 70-30 copper-nickel.

3.4.2 Minimum thickness of header plates shall be 0.090 inch; or tube halves, 0.020 inch.

3.4.3 Strut and plate type tubes shall be assembled by furnace brazing formed tube halves which have been mechanically assembled with brazing sheets. Grid type centers shall be provided for oil tubes, in order to improve flow characteristics.

3.4.4 The assembling of strut type tubes into cores, case and core subassemblies or coolers shall be accomplished by either of two methods. The first method shall consist of furnace brazing the tube to header joint, after which the joints thus formed shall be given a sealing coat of lead-tin solder. The second method shall consist of lead-silver soldering the tube to header joint, after which a coating of lead-tin solder shall be applied. The assembling of plate type tubes into cores shall be accomplished by furnace brazing.

3.4.5 Casings and covers shall be of brazed, welded, or cast construction, except that brazed construction shall not be used for the casings of class 2 coolers.

3.5 Provisioning technical documentation. Provisioning technical document preparation and processing shall be carried out in accordance with MIL-P-15137 (see 6.2).

3.6 Onboard repair parts. The onboard repair parts set is defined as the assemblage of repair parts and tools carried onboard ship for maintenance use. Each set (see note 1) of onboard repair parts shall be furnished and shall include the following:

	Quantity
For all coolers:	
(a) Gaskets, for each cooler installed - 100 percent.	
(b) Packing rings, for each cooler installed - 50 percent; or 100 percent for one cooler, whichever is the greater.	
In addition, for type A coolers:	
(c) Zinc protectors, when fitted (see note 2):	
(1) 200 percent of installed zincs (plate and pencil).	
(2) 100 percent of pencil zinc support plugs for one cooler.	
(d) Tube plugs for double tube sheet - single tube construction only (see 3.6.1) (see note 3)	30 (see note 4)
(e) Tube expander for double tube sheet - single tube construction only (see 3.3.9.3).	1
(f) Test ring (required for coolers using the packed end construction or special construction of 3.3.4.2).	1
In addition for type B coolers:	
(g) Core subassemblies in the following quantities:	
One to four coolers per ship.	1
Five to nine coolers per ship.	2
Ten or more coolers per ship.	3
(h) Felt sealing strips, for each cooler installed - 100 percent.	

Notes:

1. Quantities are based upon one set being furnished per ship.
2. The pencil zinc and the support plug for it shall be handled as separate items in the provisioning process.

Downloaded from http://www.everyspec.com

3. Standard tube expanders and tube plugs will be shipbuilder furnished. Quantity of tube plugs shall be sufficient to plug 10 percent of the tubes.
4. Where this quantity is sufficient to plug more than 10 percent of installed tubes it shall be reduced to the number required to plug 10 percent of the installed tubes or 10, whichever is greater.

3.6.1 Tube plugs for coolers with the double tube sheet-single tube construction of 3.3.6 shall be a special design. They shall make a tight joint to the inside of the tube at both the inner and outer tube sheets and shall prevent any salt water leakage from a ruptured tube from penetrating into the shell side. The plug shall be so designed that it will not be forced out when hydrostatic test pressure is applied to the space between the double tube sheets. The adequacy of such special plugs shall be demonstrated to the satisfaction of the cognizant inspector.

4. QUALITY ASSURANCE PROVISIONS

4.1 Responsibility for inspection. Unless otherwise specified in the contract or purchase order, the supplier is responsible for the performance of all inspection requirements as specified herein. Except as otherwise specified in the contract or order, the supplier may use his own or any other facilities suitable for the performance of the inspection requirements specified herein, unless disapproved by the Government. The Government reserves the right to perform any of the inspections set forth in the specification where such inspections are deemed necessary to assure supplies and services conform to prescribed requirements.

4.1.1 Inspection system. The supplier shall provide and maintain an inspection system acceptable to the Government for supplies and services covered by this specification. The inspection system shall be in accordance with MIL-I-45208 (see 6.1.1 and 6.2).

4.2 First article inspection. First article inspection shall consist of the examination and tests specified in 4.2.1 through 4.3.2.2 inclusive.

4.2.1 Performance test. A performance test shall be conducted on the cooler under the designed conditions of flow, btu removal, and inlet and outlet temperatures of cooled and cooling mediums.

4.2.2 Pressure drop test. The cooler shall be tested to determine pressure drop under various flow conditions in both cooled and cooling sides.

4.2.3 Shock test. The cooler shall be subjected to high impact shock testing in accordance with MIL-S-901 and meet grade A criteria.

4.3 Quality conformance inspection.

4.3.1 Examination. Each cooler offered for delivery shall be examined for adjustment, fit, material, finish, and any other requirements specified herein, not involving tests.

4.3.2 Hydrostatic tests.

4.3.2.1 Each oil cooler designed for use with main propulsion turbines using scoop injection of circulating water shall be given a hydrostatic test as follows:

	Test pressure
Tube (salt water) side	50 psig
Shell (oil) side	150 psig

4.3.2.2 All other coolers shall be tested at 1-1/2 times the design pressures. Double tube sheet void spaces and leakage warning passages shall be tested to the same pressure as the coolant side.

4.4 Proof test - special case (cyclic loading stipulated). For the special case of an inlet-outlet waterbox not amenable to analysis for determination of adequacy for cyclic life requirements the adequacy of the waterbox or a scale model thereof shall be verified by a proof test. This proof test shall consist of a qualitative survey of the waterbox utilizing brittle coating (stress coat or its equivalent), or photostress (molded birefringent coatings) techniques as deemed suitable, in order to determine the location of maximum strain. Quantitative measurement of the magnitude of maximum principal strain in the waterbox shall be obtained from strain gages of 1/8 inch gage length or smaller. Waterbox

Downloaded from http://www.everyspec.com

loadings shall be comprised of a combination of design submergence pressure in conjunction with piping reaction load (that load which will produce highest stress) applied to the nozzles. The nozzle loads shall be calculated as specified in 3.3.14.1. A suitable loading jig utilizing mechanical or hydraulic jacks shall be provided to apply external loads to the nozzle flanges. The following combinations of loads shall be applied:

(a) Internal pressure and external piping load (that piping reaction load which produces the highest stress) applied to one flange.
(b) Internal pressure and equal external loads (that piping reaction load which provided the highest stress) applied to both flanges.

Since the angular orientations of the applied bending moments to give the maximum stress for each load combination are unknown, and the location of maximum stress is also unknown, the angular orientations of the applied bending moments for load combinations (a) and (b) shall correspond to increments of 45 degrees around the nozzles from 0 to 360 degrees in an initial run, and a minimum of 9 degrees increments shall be used within the 45 degrees maximum stress sector in a follow-on run. The location, magnitude and direction of the maximum principal strain (stress) can be determined by brittle coating or photostress, but must be checked with electric resistance strain gages. If the maximum range of strain (stress) intensities thus determined in any location of the waterbox (by either load combination (a) or (b)) does not exceed the allowable strain (stress) intensity range for the stipulated cycle life as determined by the Modified Goodman Diagram and Fatigue Curve for the particular material involved, the waterbox design is acceptable. The contractor shall submit to NAVSEC an outline of the test procedure to be used, describing test fixtures, proposed instrumentation and procedures involved. Approval of the procedures and proposed set-up is required prior to testing. The DCAS shall generally monitor the set-up for test, adherence to procedures, and the taking of data. Certification that a proof test in accordance with the above has been previously performed, on equipment identical to that being furnished may be submitted as a basis for requesting a waiver.

4.5 Inspection of preparation for delivery. Sample packages and packs and the inspection of the preservation and packaging, packing and marking for shipment and storage shall be in accordance with the requirements of section 5 and the documents specified therein.

5. PREPARATION FOR DELIVERY

(The preparation for delivery requirements specified herein apply only for direct Government procurements. For the extent of applicability of the preparation for delivery requirements of referenced documents listed in section 2, see 6.4.)

5.1 Preservation-packaging. Preservation-packaging shall be level A or C, as specified (see 6.1.1).

5.1.1 Level A.

5.1.1.1 Preservation. Coolers constructed of corrosion-resistant material shall be unit protected in accordance with method III of MIL-P-116. Coolers constructed of material susceptible to corrosion shall have their exteriors painted with one coat of zinc chromate primer in accordance with TT-P-645. Coolers constructed of material susceptible to corrosion shall be unit protected in accordance with method I of MIL-P-116, applying a preservative as follows:

Lubricating oil systems - P2 of MIL-P-116
Water systems - Grade 5 of MIL-P-16173
Hydraulic systems - as specified (see 6.1.1)

5.1.1.2 Closure of openings. Openings shall be sealed with pressure sensitive waterproof tape, plastic or metal caps or plugs or waterproof barrier material. Where covered openings are vulnerable to puncture, the covering shall be further protected by hardboard, wood, plywood or metal covers.

5.1.2 Level C. Openings shall be sealed to prevent the entrance of foreign material. Preservation-packaging of coolers shall afford protection against corrosion, deterioration and physical damage during shipment from the supply source to the first receiving activity for immediate use. The suppliers normal preservation-packaging methods may be utilized when such meet the requirements of this level.

Downloaded from http://www.everyspec.com

5.2 Packing. Packing shall be level A, B or C as specified (see 6.1.1).

5.2.1 Level A. Coolers packaged as specified (see 6.1.1) shall be packed in overseas type wood cleated plywood or nailed wood boxes or open crates conforming to PPP-B-601, PPP-B-621, PPP-C-650 or MIL-C-3774 as applicable. The gross weight of wood or wood cleated boxes shall not exceed 200 pounds unless the weight of a single cooler exceeds this weight. Wood cleated plywood and nailed wood boxes shall be used for gross weights not exceeding 500 pounds. The boxes shall be modified by addition of skids and the coolers bolted through the skids. When the gross weight of the unit exceeds 500 pounds, the cooler shall be packed in a open crate. Equipment shall be shrouded within the box or crate with barrier material as specified in the appendix to PPP-C-650. Containers shall be closed, strapped or banded in accordance with the applicable container specification or appendix thereto.

5.2.2 Level B. Coolers packaged as specified (see 6.1.1) shall be packed in domestic wood-cleated fiberboard, wood-cleated plywood, nailed wood boxes or crates conforming to PPP-P-591, PPP-B-601, PPP-B-621, PPP-C-650 or MIL-C-3774. The gross weight of wood and wood cleated boxes shall not exceed 200 pounds unless the weight of a single item exceeds this weight. Boxes shall be modified for gross weights over 200 pounds by the addition of skids and the cooler shall be bolted through the base and skids. Coolers packed in unsheathed crates shall be shrouded as specified in 5.2.1. Containers shall be closed, strapped or banded in accordance with the applicable container specification or appendix thereto.

5.2.3 Level C. Coolers packaged as specified (see 6.1.1) shall be packed in containers which will insure carrier acceptance at the lowest rate and safe delivery at destination. Containers shall comply with Uniform Freight or National Motor Freight Classification Rules or regulations or other carrier rules as applicable to the mode of transportation.

5.2.4 Repair parts and tools. Repair parts and tools shall be preserved-packaged, packed and marked in accordance with MIL-R-196 or PPP-P-40 for the levels specified as follows:

Destination	Preservation-Packaging	Packing
Stock	A	B
Onboard	A	C
Immediate use	C	C

5.2.4.1 Submarine repair parts. Level A preservation-packaging of repair parts for submarine usage, shall be in transparent packages in accordance with MIL-STD-758, except that transparent barriers shall conform to MIL-B-22191 as follows:

MIL-STD-758	MIL-B-22191
Method I, IC and IA	Type II barriers
Method II	Type I barriers
Method III	Type III barriers

Packing of submarine repair parts shall be in accordance with 5.2.4.

5.3 Marking. In addition to any special marking required by the contract or order (see 6.1.1), interior packages and shipping containers shall be marked in accordance with MIL-STD-129. Equipment serial number shall be marked on one face of the shipping container. In addition, interior packages for submarine repair parts shall be marked in accordance with MIL-STD-758.

6. NOTES

6.1 Ordering data.

6.1.1 Procurement requirements. Procurement documents should specify the following:

(a) Title, number, and date of this specification.
(b) Type, class and service of cooler (see 1.2).
(c) Identification of fluid to be cooled. Lubrication oil should be designated by specification or military symbol.
(d) Rate of flow of fluid to be cooled, gallons per minute (gpm).
(e) Inlet temperature of fluid to be cooled, °F.
(f) Outlet temperature of fluid to be cooled, °F. or rate of heat exchange, btu/hr.

Downloaded from http://www.everyspec.com

(g) Identification of coolant.
(h) Rate of flow of coolant, if established, (gpm).
(i) Inlet temperature of coolant, °F. (see 3.2.12).
(j) The space limitations governing the cooler size if established.
(k) Design pressure of fluid to be cooled, psi.
(l) Design pressure of coolant, psi.
(m) Allowable design point pressure drops for respective cooler sides, psi, if other than as specified in 3.2.10.
(n) Type of flanged connections if other than those specified in 3.2.15.
(o) Whether hose connections are required (see 3.2.15).
(p) Wall thickness of vent and drain root connections, if other than specified in 3.2.17.
(q) If pressure gage connections are required at inlet and outlet of coolant and cooled fluid sides (see 3.2.18).
(r) O-ring gasket material if other than as specified in 3.2.24.
(s) Whether technical manuals are required (see 3.2.27.3).
(t) Whether materials in accordance with 3.3.18 are required for synthetic lubricating oil cooler.
(u) Whether steel shell side materials are required (see 3.3.1.6).
(v) Whether aluminum shell side internals are required (see 3.3.1.7).
(w) Whether double tube sheets are required at each end of the cooler (see 3.3.4.2 and 3.3.6).
(x) Whether double tube construction is required (see 3.3.7).
(y) Outside diameter of tubes.
(z) Whether shell side tinning is required (see 3.3.8.
(aa) Wall thickness of tubes if other than standard is required (see 3.3.9.1.4).
(bb) Diameter and thickness of attached circulating water piping (see 3.3.14 through 3.3.16).
(cc) Whether aluminum alloys are specified for type B coolers (see 3.4.1.5).
(dd) Whether nonmagnetic construction is specified for type B coolers (see 3.4.1.6).
(ee) Quality assurance requirements (see 4.1.1).
(ff) Hydrostatic test pressures for respective cooler sides and on end compartments and leakage warning passages when applicable, if other than as specified in 4.3.2.
(gg) Ship motion and attitude requirements if other than specified in 3.2.3.
(hh) Whether coolers are for submarine, surface ship, landing craft or small boat application.
(ii) Levels of preservation-packaging and packing required (see 5.1 and 5.2).
(jj) Type of hydraulic preservative required (see 5.1.1.1).
(kk) Special marking required (see 5.3).

6.1.2 Contract data requirements. Data generated by this document are not deliverable unless specified on the Contract Data Requirements List (DD Form 1423) or the contract schedule. The data required by this specification include, but are not restricted to the following:

(a) Drawings (see 3.2.26).
(b) Certification data sheets (see 3.2.26.2).
(c) Technical manuals (see 3.2.27).
(d) Stress reports (see 3.3.16.1).

6.2 Management control system document. The following management control system documents should be included on DD form 1660:

(a) MIL-P-15137 (see 3.5).
(b) MIL-I-45208 (see 4.1.1).

6.3 First article inspection. Invitations for bids should provide that the Government reserves the right to waive the requirement for samples for first article inspection as to those bidders offering a cooler which is similar in construction, size and application to a cooler which has been previously procured or tested by the Government, and that bidders offering such products, who wish to rely on such production or test, must furnish evidence with the bid that prior Government approval is presently appropriate for the pending procurement.

6.4 Sub-contracted material and parts. The preparation for delivery requirements of referenced documents listed in section 2 do not apply when material and parts are procured by the supplier for incorporation into the equipment and lose their separate identity when the equipment is shipped.

Downloaded from http://www.everyspec.com

6.5 Definition. As used herein "drawing review agency" is generally a Government Command or agency such as NAVSHIPS, NAVSEC, a Shipbuilder or an authorized representative. Communication with the drawing review agency should be handled through the procuring activity.

6.6 THE MARGINS OF THIS SPECIFICATION ARE MARKED "#" TO INDICATE WHERE CHANGES (ADDITIONS, MODIFICATIONS, CORRECTIONS, DELETIONS) FROM THE PREVIOUS ISSUE HAVE BEEN MADE. THIS WAS DONE AS A CONVENIENCE ONLY AND THE GOVERNMENT ASSUMES NO LIABILITY WHATSOEVER FOR ANY INACCURACIES IN THESE NOTATIONS. BIDDERS AND CONTRACTORS ARE CAUTIONED TO EVALUATE THE REQUIREMENTS OF THIS DOCUMENT BASED ON THE ENTIRE CONTENT IRRESPECTIVE OF THE MARGINAL NOTATIONS AND RELATIONSHIP TO THE LAST PREVIOUS ISSUE.

Preparing activity:
Navy - SH
(Project 4420-N021)

Downloaded from http://www.everyspec.com

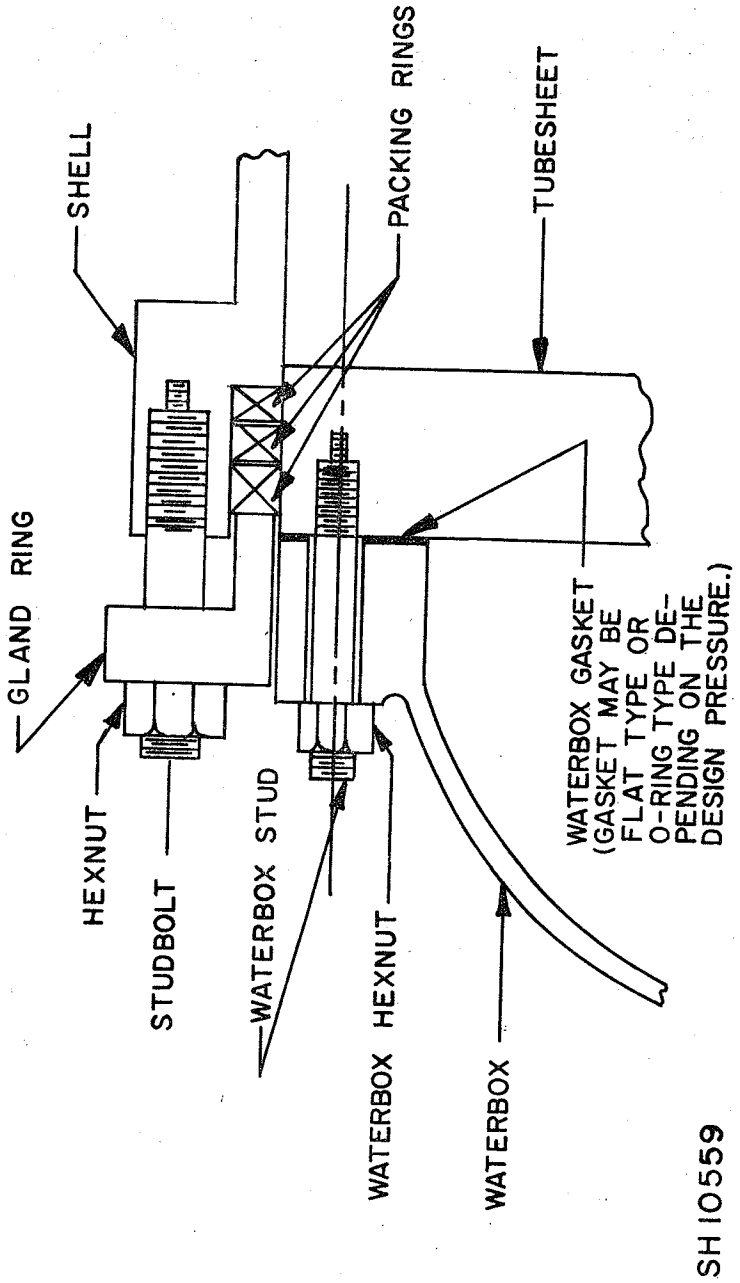

Figure 1 - Straight tube floating head, removable bundle, outside packed stuffing box.

Downloaded from http://www.everyspec.com

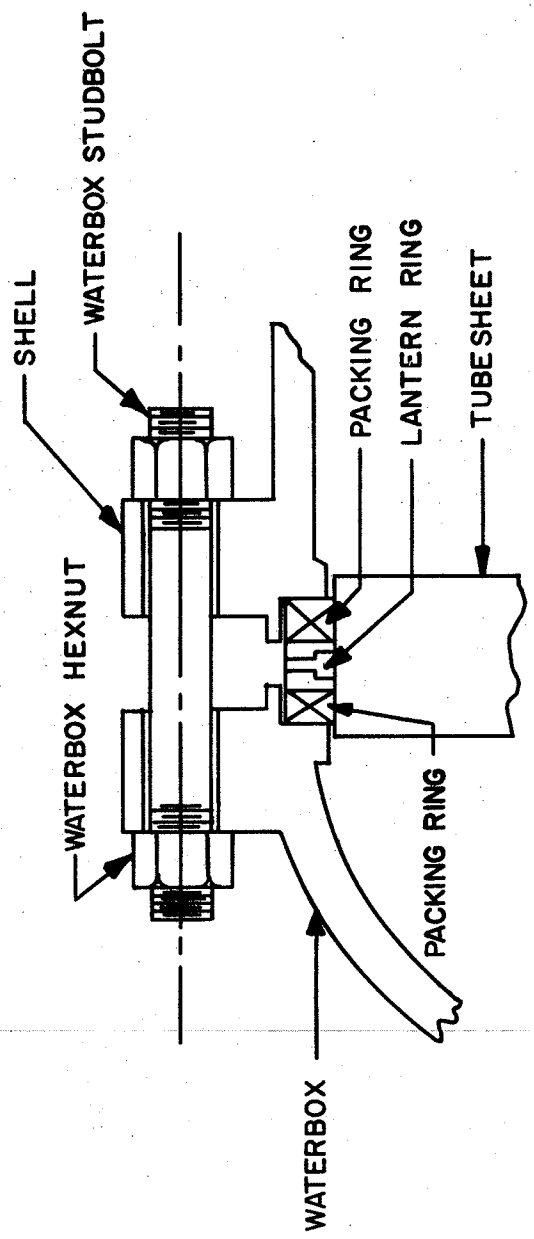

SH10560

Figure 2 - Straight tube floating head, removable bundle, outside packed lantern ring construction

Downloaded from http://www.everyspec.com

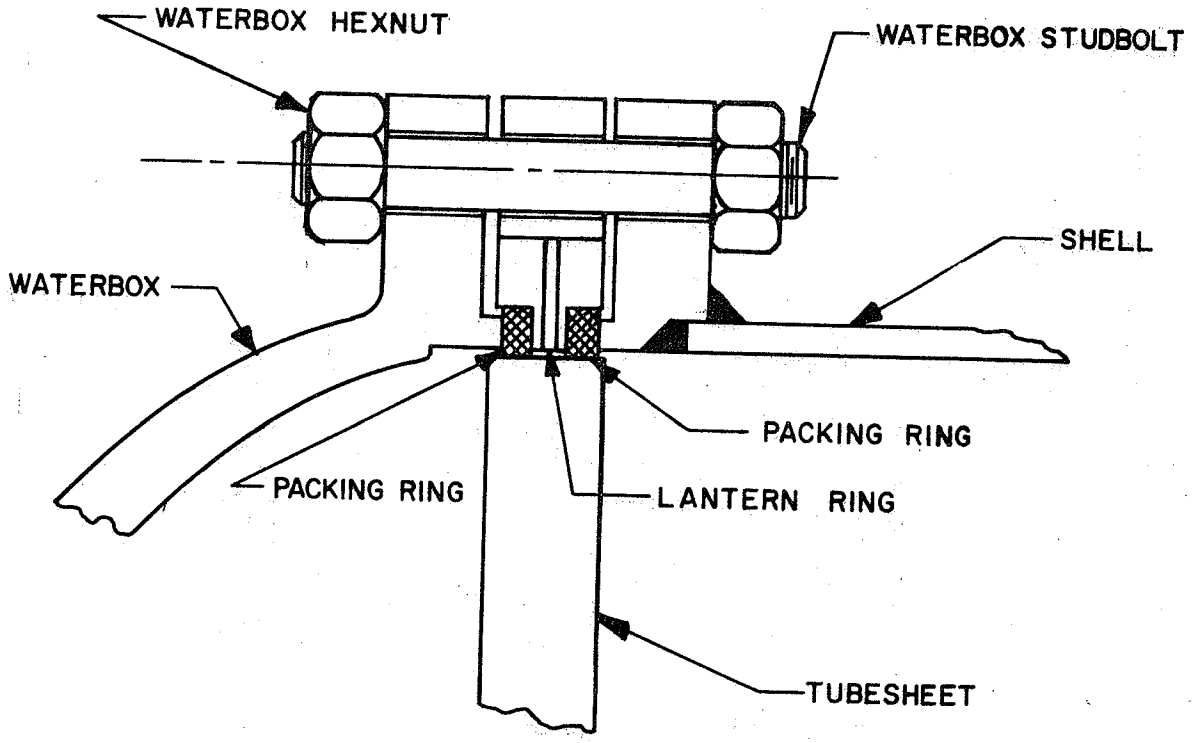

Figure 3 - Straight tube floating head removable bundle outside packed lantern ring construction, waterbox studbolt threaded into the lantern ring.

Downloaded from http://www.everyspec.com

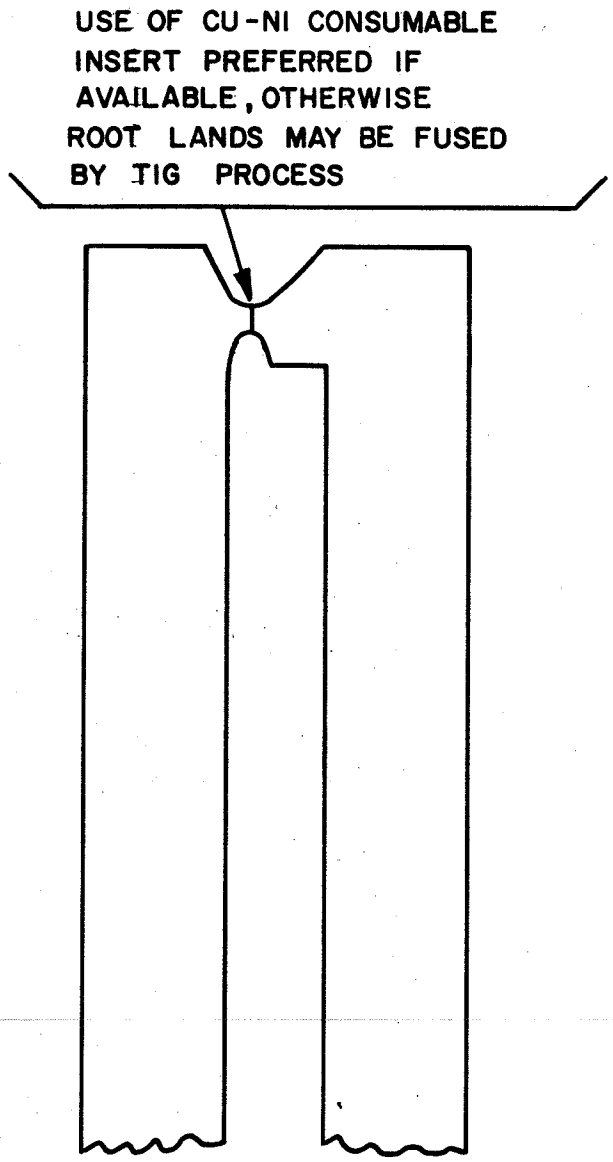

SH10561

Figure 4 - Acceptable method of welding inner and outer tube sheets - all double tubesheet cooler applications.

Downloaded from http://www.everyspec.com

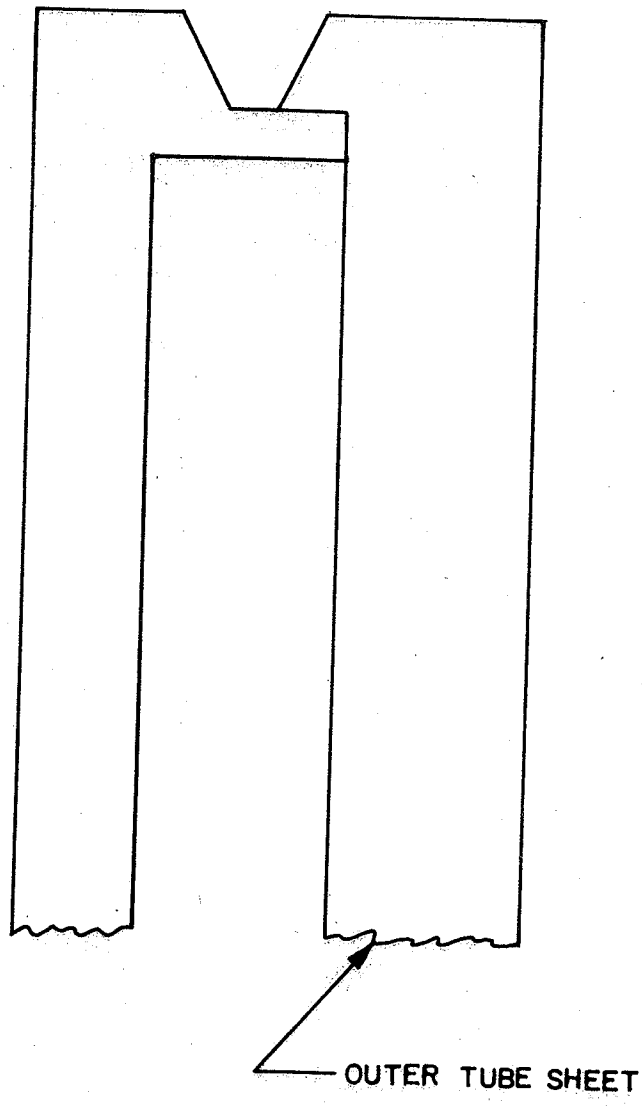

SH10562

Figure 5 - Acceptable method of welding inner and outer tube sheets - cooler applications for which cyclic life requirements are not specified.

Downloaded from http://www.everyspec.com

STANDARDIZATION DOCUMENT IMPROVEMENT PROPOSAL

OMB Approval
No. 22-R255

INSTRUCTIONS: The purpose of this form is to solicit beneficial comments which will help achieve procurement of suitable products at reasonable cost and minimum delay, or will otherwise enhance use of the document. DoD contractors, government activities, or manufacturers/vendors who are prospective suppliers of the product are invited to submit comments to the government. Fold on lines on reverse side, staple in corner, and send to preparing activity. Comments submitted on this form do not constitute or imply authorization to waive any portion of the referenced document(s) or to amend contractual requirements. Attach any pertinent data which may be of use in improving this document. If there are additional papers, attach to form and place both in an envelope addressed to preparing activity.

DOCUMENT IDENTIFIER AND TITLE

NAME OF ORGANIZATION AND ADDRESS

CONTRACT NUMBER

MATERIAL PROCURED UNDER A

☐ DIRECT GOVERNMENT CONTRACT ☐ SUBCONTRACT

1. HAS ANY PART OF THE DOCUMENT CREATED PROBLEMS OR REQUIRED INTERPRETATION IN PROCUREMENT USE?
   A. GIVE PARAGRAPH NUMBER AND WORDING.

   B. RECOMMENDATIONS FOR CORRECTING THE DEFICIENCIES

2. COMMENTS ON ANY DOCUMENT REQUIREMENT CONSIDERED TOO RIGID

3. IS THE DOCUMENT RESTRICTIVE?

   ☐ YES ☐ NO *(If "Yes", in what way?)*

4. REMARKS

SUBMITTED BY *(Printed or typed name and address - Optional)*

TELEPHONE NO.

DATE

DD FORM 1 JAN 72 1426

REPLACES EDITION OF 1 JAN 66 WHICH MAY BE USED

S/N 0102-014-1802

☆ U.S. GOVERNMENT PRINTING OFFICE: 1972—714-863/3404 2-1

Downloaded from http://www.everyspec.com

FOLD

COMMANDER
NAVAL SHIP ENGINEERING CENTER
CENTER BUILDING - SEC 6124B
PRINCE GEORGE'S CENTER
HYATTSVILLE, MARYLAND 20782

OFFICIAL BUSINESS
PENALTY FOR PRIVATE USE $300

POSTAGE AND FEES PAID
DEPARTMENT OF NAVY
DOD 316

U.S. MAIL

COMMANDER
NAVAL SHIP ENGINEERING CENTER
CENTER BUILDING - SEC 6124B
PRINCE GEORGE'S CENTER
HYATTSVILLE, MARYLAND 20782

FOLD