MIL-C-13777G
20 February 1976
SUPERSEDING
MIL-C-13777F
15 September 1969

MILITARY SPECIFICATION

CABLE, SPECIAL PURPOSE, ELECTRICAL: GENERAL SPECIFICATION FOR

This specification is approved for use by all Departments and Agencies of the Department of Defense.

1. SCOPE

1.1 Scope.- This specification covers flexible, portable multi-conductor cables for interconnecting various units of complex weapons systems where voltages do not exceed 600 volts root mean square (rms) (see 6.1).

1.2 Classification.

1.2.1 Type designation.- The type designation shall be indicated by a combination of digits and letters. Cable types shall be as specified (see 3.1 and 6.2).

S	16	1375	S	C
Cable shield (1.2.1.1)	No. of conductors (1.2.1.2)	Nominal cable diameter (1.2.1.3)	Conductor shield (1.2.1.4)	Coaxial (1.2.1.5)

1.2.1.1 Cable shield.- When the letter S precedes the number, an over-all shield under the sheath is indicated.

1.2.1.2 Number of conductors.- The first two digits denote the number of individual conductors comprising the cable.

1.2.1.3 Nominal cable diameter.- The following four digits denote the nominal cable diameter in mils (thousandths of an inch).

1.2.1.4 Conductor shield.- When the letter S follows the digits, individual conductor shields are indicated.

1.2.1.5 Coaxial conductor.- The letter C at the end of the type designation denotes that the cable contains one or more coaxial conductors.

2. APPLICABLE DOCUMENTS

2.1 The following documents, of the issue in effect on date of invitation for bids or request for proposal, form a part of this specification to the extent specified herein.

SPECIFICATIONS

Federal

L-P-390	Plastic Molding and Extrusion Material, Polyethylene and Copolymers (Low, Medium, and High Density)
QQ-W-343	Wire, Electrical (Uninsulated)
QQ-W-423	Wire, Steel, Corrosion-resisting

Military

MIL-C-17	Cables, Radio Frequency, Flexible and Semi-rigid, General Specification For
MIL-I-631	Insulation, Electrical, Synthetic-Resin Composition, Nonrigid
MIL-C-12000	Cable, Cord, and Wire, Electric, Packaging of
MIL-M-20693	Molding Plastic, Polyamide (Nylon) Rigid

STANDARDS

Federal

FED-STD-228	Cable and Wire, Insulated; Methods of Testing
FED-STD-601	Rubber, Sampling and Testing

Military

MIL-STD-104	Limit for Electrical Insulation Color
MIL-STD-109	Quality Assurance Terms and Definitions
MIL-STD-810	Environmental Test Methods

See supplement 1 for list of associated specification sheets.

(Copies of specifications, standards, drawings, and publications required by contractors in connection with specific procurement functions should be obtained from the procuring activity or as directed by the contracting officer.)

 1823080

2.2 Other publications.- The following documents form a part of this specification to the extent specified herein. Unless otherwise indicated, the issue in effect on date of invitation for bids or request for proposal shall apply.

American Society for Testing and Materials (ASTM)

D-1149-64(1970) Accelerated Ozone Cracking of Vulcanized Rubber, Test For

(Application for copies should be addressed to the American Society for Testing and Materials, 1916 Race St., Philadelphia, PA 19103.)

National Electrical Manufacturers Association (NEMA)

HP-1-1973 High Temperature Insulated Wire Impulse Dielectric Testing

(Application for copies should be addressed to the National Electrical Manufacturers Association, 155 East 44th Street, New York, NY 10017.)

Technical society and technical association specifications and standards are generally available for reference from libraries. They are also distributed among technical groups and using Federal agencies.

3. REQUIREMENTS

3.1 Specification sheets.- The individual item requirements shall be as specified herein and in accordance with the applicable specification sheets. In the event of any conflict between requirements of this specification and the specification sheet, the latter shall govern. (see 6.2.1).

3.2 Qualification.- The cable furnished under this specification and covered by specification sheets shall be a product which has been tested and passed the qualification tests specified herein and has been listed on or approved for listing on the applicable qualified products list (QPL). All cable types other than those covered by specification sheets shall be procured in accordance with this specification provided the supplier's name appears on the QPL and the supplier furnishes test reports to show that the new type meets all the requirements as specified herein. (See 4.3.1, 6.2.2, and 6.6).

3.3 Material.- The material shall be as specified and when not specifically described shall meet the performance characteristics specified herein.

3.4 Wire.- Each wire shall consist of a conductor covered with insulating material, insulation jackets and shields as required.

3.4.1 Conductor.- Each conductor shall be composed of an assembly of coated copper strands, and when specifically required, reinforcing steel strands (see 3.4.1.2). Conductor sizes 20 AWG through 12 AWG shall be constructed with concentric-lay conductors and shall comply with the requirements listed in Table I. Concentric-lay shall be interpreted to be a central core surrounded by one or more layers of helically wound strands. The direction of lay for the successive layers shall be alternately reversed (true concentric-lay) or in the same direction (unidirectional lay). If the direction of lay for the successive layers is the same, the pitch or length of lay shall increase with each successive layer.

TABLE I

CONDUCTOR CONSTRUCTION AND MAXIMUM RESISTANCE VALUES

Conductor AWG Size	Conductor Construction Copper Strands		Maximum Conductor Resistance (Ohms per 1000 Feet)
	Number	Size (AWG)	Tin Coated
0000	427	23	.0562
000	259	22	.0718
00	259	23	.0896
0	259	24	0.113
1	259	25	0.143
2	259	26	0.180
4	133	25	0.283
6	133	27	0.450
8	133	29	0.710
9	133	30	0.914
10	104	30	1.25
12	19	25	1.99
13	19	26	2.43
14	19	27	3.05
15	19	28	3.88
16	19	29	4.82
18	16+3SS	30	7.38
20	16+3SS	32	11.6

3.4.1.1 Copper strands.- The copper strands shall be soft annealed, commercially pure copper, free from splints, flaws, or other imperfections. Each strand shall be drawn and annealed so that strands taken from the completed cable conform to the values given below. Tests shall be made in accordance with 4.5.1.1.

Elongation (in 10 inch.) Minimum %

4 1E23080

3.4.1.2 Conductor reinforcement.- Insulated conductors of 18 size and smaller as specified shall be reinforced by the addition of 3 steel strands (SS), spring temper, stainless steel wire meeting the requirements of QQ-W-423, Form I, Composition 302 or 304, Condition B in accordance with Table I and in the applicable specification sheet. Stainless steel strands shall be the same size as the copper stranding and shall be positioned at the center core or in the core and the first grouping surrounding the center core.

3.4.1.3 Coating.- Copper strands shall be coated with commercially pure tin unless otherwise specified. Steel strands shall not be coated. Conductors shall be tested for coating in accordance with 4.5.1.2. Coaxial member strands shall be coated as specified in MIL-C-17 or in the applicable specification sheet.

3.4.1.4 Conductor resistance.- The resistance in ohms per 1000 feet at 68°F for tin coated conductors shall not exceed the values listed Table I when tested in accordance with 4.5.1.3.

3.4.1.5 Joints.- There shall be no splices or joints in the conductor as a whole. Not more than one of the strands in a concentric conductor of 19 strands or less shall be spliced in any one linear foot of the conductor. In rope stranded conductors the primary groups used in forming the rope shall be considered the equivalent of a solid strand in concentric stranded conductors. In the case of bunch stranded conductors, a group of individual strands not exceeding 10 percent of the total number of strands comprising the conductor may be considered as a primary group. Such a group may be treated on the same basis as set forth for the primary group of a rope stranded conductor. In all cases, splices or joints shall be so constructed and distributed throughout the conductor that its diameter and resistance will not be adversely affected and its performance in finished cable shall insure compliance with requirements specified herein.

3.4.2 Insulation compound.- There shall be applied over the conductor a well centered virgin polyethylene material in accordance with L-P-390, Type II, Class L, Grade 3 or 4 and meeting the requirements of Table II when tested in accordance with 4.5.2.1.

3.4.2.1 Accelerated aging.- When tested in accordance with 4.5.2.2, the insulation compound shall meet the properties of Table II.

TABLE II

Property	
Ult. elongation (min) in.	2-7
Tensile strength (min) psi	1400
After aging	
Depreciation in tensile strength (%) max	25
Depreciation in elongation (%) max	25

1B33080

3.4.2.2 Shrinkage.- The shrinkback of the insulation from either end of the conductor shall not exceed 1/16 inch and there shall be no evidence of end splitting or cracking when tested in accordance with 4.5.2.2.2.

3.4.3 Electrical properties.

3.4.3.1 Electrode spark test.- At the option of the manufacturer, the conductors shall be subjected to the spark test of 4.5.2.5.1 to assure that cracks, pinholes, and similar defects do not exist in the insulation. The spark test voltages shall be as specified in the applicable specification sheet.

3.4.3.2 Voltage breakdown (primary insulation).- Prior to final cabling 100 percent of all insulated conductors shall show no evidence of breakdown when tested in accordance with 4.5.2.5.2 at the minimum tank test voltages specified below. At the option of the manufacturer the impulse dielectric test of 4.5.2.5.2.1 may be substituted for the tank test at the minimum impulse dielectric test voltages specified below without evidence of breakdown.

AWG Size	1 Minute Tank Test Voltage	Impulse Dielectric Test Voltage (Kilovolts Peak)
20-10	2000	10.0 kVp
8-2	3000	12.5 kVp
1-4/0	4000	15.0 kVp

3.4.3.3 Water sbsorption.- The increase in capacitance of the insulating compound together with the nylon covering on all sizes 12 AWG and smaller shall not exceed 3 percent when tested in accordance with 4.5.2.5.3. The total capacitance reading on insulated conductors 18 AWG and smaller shall not exceed 110 picofarads (pF) per foot at the completion of the 8-day test.

3.4.3.4 Coaxial members.

3.4.3.4.1 Capacitance.- The capacitance of coaxial conductors shall be as specified in the applicable specification sheet when cables are tested in accordance with 4.5.2.5.4.

3.4.3.4.2 Attenuation.- The maximum attenuation of coaxial conductors shall be as specified in the applicable specification sheet when cables are tested in accordance with 4.5.2.5.5.

3.4.3.4.3 Impedance.- The impedance of coaxial conductors shall be as specified in the applicable specification sheet when cables are tested in accordance with 4.5.2.5.6.

3.4.4 Polyamide covering.- An extruded, clear, heat-stabilized polyamide jacket with a minimum 0.003 inch average wall thickness shall be extruded over all sizes 12 AWG and smaller. Polyamide shall be in accordance with MIL-M-20693, Comp A, Type III, Grade E and shall conform to the heat stability test of 4.5.2.3.1 without evidence of cracks or tears. Sizes 10 AWG and larger shall require no covering.

3.4.5 Color code.- Each insulated conductor shall be color coded in accordance with the applicable specification sheet. The insulation shall be the base color. When specifically specified all white color coding may be used or natural colored insulation material with stripes (see 6.2.1). Limits for colored insulation shall be in accordance with MIL-STD-104.

3.4.5.1 Color coding of polyamide covering.- Where extruded polyamide coverings are used, color identification shall be by means of helical stripes applied in the same direction over the polyamide. All materials used for striping shall be nonconductive. When the insulating compound is colored for the base color, two colored tracers shall be used when applicable, the wider stripe indicating the first tracer. When natural color indulation is used as the insulation compound the base color shall be indicated by an added base stripe. (See 3.4.5.2).

3.4.5.1.1 Surface resistance.- The surface resistance of the covered insulated black striped conductors shall be 10 megohm-inches (min) initial and final values when tested in accordance with 4.5.2.4.2.

3.4.5.2 Stripe width.- The width of the base color stripe (when applicable) shall not be less than 0.045 inch. The first tracer shall not be less than 0.031 inch and the second tracer if required shall not be less than 0.015 inch. All dimensions are perpendicular to the axis of the stripe.

3.4.5.3 Length of lay.- The length of lay of the colored stripes shall conform to the following:

Dia. over covering (in)	000 to .083	.084 to .110	.111 and larger
Length of lay max (in)	1.00	1.500	2.000

3.4.5.4 Durability.- Striping applied to outer surface shall be capable of withstanding 250 cycles (500 strokes) of abrasive action when tested in accordance with 4.5.2.4. A continuous line of the colored stripe shall not be removed.

1A63080

3.4.6 Conductor shield.- When the construction includes a shield, a tight-fitting, closely woven braid of tin coated soft or drawn-and-annealed copper strands shall be applied over the jacket. The shield shall be applied in such a manner as to provide at least 75 percent coverage over the construction beneath. The braid shall consist of 36 AWG for diameters 0.250 inch or less and 34 AWG for larger sizes. Shields shall be applied in such a manner as to preclude irregularities, breaks or other discontinuities not consistent with good manufacturing practice. The percent coverage of the shield shall be computed as follows:

$$K = (2F - F^2) \times 100$$

Where:

K = percent coverage
F = NPd/sin a
N = number of strands per carrier
P = picks per inch of wire length
d = diameter of one of the shield strands in inches
a = angle of shield with axis of wire, in degrees,
$\tan a = 2\pi (D + 2d) P/C$
C = number of carriers
D = diameter of wire under shield, in inches

3.4.6.1 Shielded jackets.- Over shielded single conductors, pairs, triplets or quads there shall be applied either a polyamide jacket 0.005 to 0.008 inch wall thickness of white or natural coloring or a sealed jacket of polyester tapes. Polyamide jackets may be used when the diameter over the shield does not exceed 0.200 inches. Sealed tapes may be used on shields for any diameter. Sealed jackets of polyester tapes made with adhesive coated polyester tapes or an adhesive applied between two 0.001 inch helically applied polyester tapes or polyester/polyethylene tapes consisting of .001 inch polyester and a .0005 inch polyethylene. Two tapes shall be applied with a 50 percent minimum overlap. All shielded polyamide jackets shall show no evidence of cracks or tears when subjected to the heat stability test of 4.5.2.3.2. Where insulation is a requirement (electrically driven shields) the sealed polyester tape jacket as described above is mandatory and these shield jackets shall be tested at 1500 volts prior to cabling in accordance with 4.5.2.5.2 with no evidence of breakdown. The polyester film shall conform to MIL-I-631, Type G, Form F, except for percent elongation.

3.5 Cabling.- The requisite number of conductors, as required in the applicable specification sheet, shall be cabled together with suitable lay and filler where necessary, producing an essentially circular cross section.

3.5.1 Filler.- Filler material shall be one of the following materials and shall be capable of conforming to all of the performance requirements specified for the completed cable.

 1873080

Clean, dry, long fiber cotton, fungus treated to conform to the test specified in 4.4.1; twisted polyethylene film conforming to L-P-390, Type I, Grade 2 or 3; oriented polypropylene multi-monofilament; or polyamide fiber filler. Where round fillers such as cores or wire replacements are required polyethylene rod filament conforming to L-P-390, Type II, Grade 7 may be used.

3.5.2 Tape marker.- The tape marker shall be at least 1/8 inch wide with markings 1 foot apart and shall be placed under the cable separator. The year of manufacture and the name of the manufacturer shall be clearly printed on one side of the tape between foot markings. The markings shall be clearly visible upon removal of the tape from the cable. Other information may be included at the manufacturer's option.

3.5.3 Barrier tape.- At the option of the manufacturer, a barrier tape may be applied over the cable assembly under the cable separator. Tape material shall be polyethylene terephthalate conforming to MIL-I-631, Type G.

3.5.4 Cable shield.- When specified in the applicable specification sheet, there shall be applied over the assembled wires under the cable separator, a braid consisting of tin coated copper strands having construction and coverage conforming to 3.4.6 and wire gage sizes as listed below:

Core Diameter	Shield Braid Sizes (AWG)
0 - .300 inch	36
.301 - 0.900 inch	34
0.901 - 1.700 inch	32
1.701 - and up	30

When cable shield is required a minimum .001 inch core tape conforming to 3.5.3 shall be applied over the assembled core under the shield and over the cable shield under the cable separator.

3.5.5 Cable separator.- The separator shall be applied over the assembled conductors or the over-all shield if required. The separator shall consist of dry, soft, cotton braid, fungus treated and conforming to the test specified in 4.4.1. The size of the cotton shall be 26/2 and the percent coverage shall not be less than 80 percent when computed by the following formula:

$$K = (2F-F^2) \times 100$$

Where:

K = percent coverage
F = NPd/sin a
N = number of ends per carrier
P = picks per inch
d = 0.009 inches
a = angle of braid with cable axis in degrees, tan a = $2\pi (D + 2d) P/C$
C = number of carriers
D = diameter of cable under separator

1E63080

3.6 Sheath.- Over the cable core there shall be extruded a well centered sheath. The minimum thickness at any cross section shall be not less than 90 percent of the average wall thickness at the cross section. The minimum sheath thickness shall not be less than that specified in the applicable specification sheet. When two layers are specified, the outer layer shall constitute at least 50 percent of the total thickness.

3.6.1 Reinforcement.- Where two layers are specified in the applicable specification sheet, a reinforcement shall be provided between the two layers consisting of two serves of 16-2/3 fungus resistant cabled cotton, served in reverse, 7 ends per inch of cable, or equivalent rayon or polyamide tire cord may be substituted for the seine twine serves.

3.6.2 Physical properties

3.6.2.1 Unaged sheath.- Single and double layer sheaths shall consist of a polychloroprene compound (virgin material) having the characteristics listed in Table III.

TABLE III

Property	
Tear strength (lb/in.), min.	20
Tension set (in.), max.	3/8
Ult. elongation (2 in. to break), min.	2-8
Tensile strength (psi), min.	1,800

3.6.2.2 Accelerated aging.- When tested in accordance with 4.5.3.2, the sheath shall meet the requirements of Table IV.

TABLE IV

Property	
Ult. elongation (2 in. to break), min.	2-7
Tensile strength (psi), min.	1,600

3.6.2.3 Resistance to oil.- When tested in accordance with 4.5.3.3, the tensile strength and the ultimate elongation of the sheath shall not depreciate more than 40 percent.

3.6.3 Vulcanizing.- In order that the surface of the finished cable shall present a smooth appearance, without objectionable roughness or irregularities, the sheath shall be vulcanized and cured in place over the cable core while contained in and restricted by a close fitting mold

(see notes 6.5.1) or continuous lead pipe extruded directly onto the cable. After vulcanizing, the sheath shall be a firmly bound, strong, high elastic, homogeneous mass. The sheath shall not be over-vulcanized, sticky, or tacky, and shall only with extreme difficulty be separable into layers.

3.6.4 Cable identification.- The following cable identification shall be marked on the outer surface of the sheath:

MIL-C-13777G, Manufacturer's name, cable type and year of manufacture.

Example: MIL-C-13777G Blank Mfg. Co. S161375SC 1976

Inked marking shall be employed. Inked marking shall repeat at intervals of not more than 24 inches and may be continuous. Marking, at the discretion of the manufacturer, may be on either one, two or three lines. When requested by the procuring activity, the conductor size shall be included in the identification inscription. (See 6.2.1).

3.6.5 Durability (ink marking).- The ink marking on the sheath shall meet the durability requirement of 3.4.5.4 except that a continuous line shall not be evident through any letter or numeral.

3.7 Finished cable.

3.7.1 Cold bend.- All cable shall be capable of withstanding the test voltage specified in the applicable specification sheet and there shall be no visible signs of damage when examined under a glass having a magnification of three diameters after cold bending in accordance with 4.5.4.1.2.

3.7.1.1 Cold bend torque.- The amount of torque required to bend the cable shall not exceed that specified in the applicable specification sheet when tested in accordance with 4.5.4.1.3.

3.7.2 Impact, bend, and twist requirements.- Unless otherwise specified in the applicable specification sheet, finished cable shall comply with the following minimum impact, bend, and twist requirements (mechanical tests).

Mechanical testing (minimum cycles)

Impact - 200
Bend - 2000
Twist - 2000

The cable shall meet the mechanical tests at -65° to 160°F in accordance with 4.5.4.1.1 (see Table V) or at 68° to 95°F in accordance with 4.5.4.1 (see Table VII) whichever is applicable. There shall be no electrical breakdown or cracking or splitting of the outer sheath during the testing. Specimens used for this test should be discarded without further testing. Cables 1.750 diameter and larger shall be excluded from the bend and twist tests.

1B63080

3.7.3 Electrical requirements.- The cable shall meet the electrical requirements of this specification for all electrical tests specified.

3.7.3.1 Voltage test requirements.- When tested in accordance with 4.5.4.2.2, the cable shall exhibit no breakdown when subjected to the test voltage specified in the applicable specification sheet at a frequency of 60 or 400 Hertz (Hz).

3.7.3.2 Insulation resistance.- After application of the sheath, the insulation of the completed cable shall have a resistance value of not less than the values of R as calculated from the following formula:

$$R = 50{,}000 \log \frac{D}{d}$$

where D = Diameter over insulation
d = Diameter under insulation
R = Insulation resistance in megohms - 1,000 ft at 60°F

3.7.4 Size and weight.- The size and weight (if specified) of the finished cable shall be in accordance with that specified in the applicable specification sheet.

3.7.5 Ozone resistance.- After testing in accordance with 4.5.4.1.4, the sheath shall exhibit no visible cracks when examined under a glass having a magnification of three diameters.

3.8 Workmanship.- Cable furnished under this specification shall be manufactured in a thoroughly workmanlike manner. All material shall be sound, of uniform quality and condition, and free of cracks and other defects which may adversely affect its serviceability.

4. QUALITY ASSURANCE PROVISIONS

4.1 General quality assurance provisions.

4.1.1 Responsibility for inspection.- Unless otherwise specified in the contract or purchase order, the contractor is responsible for the performance of all inspection requirements as specified herein. Except as otherwise specified in the contract, the contractor may use his own or any other facilities suitable for the performance of the inspection requirements specified herein, unless disapproved by the Government. The Government reserves the right to perform any of the inspections set forth in the specification where such inspections are deemed necessary to assure supplies and services conform to prescribed requirements.

4.2 General quality assurance and inspection provisions.

 1A73080

4.2.1 Government verification.- All quality assurance operations performed by the contractor shall be subject to Government verification at unscheduled intervals. Verification shall consist of surveillance of the operations to determine whether the practices, methods and procedures of the inspection plan are being properly applied. In addition the Government - at its discretion - may perform all or any part of the applicable inspection specified in Groups A, B, and C inspection to verify that contractor's compliance with specified requirements. Failure of the contractor to promptly correct deficiencies discovered will be cause for suspension of acceptance until correction has been made or until conformance of product to prescribed criteria has been demonstrated. When specifically required by the procuring activity, samples of cable shall be furnished for the performance of the mechanical tests of 4.5.4.1.1 and 4.5.4.1.3 by a designated laboratory (see 6.2.1).

4.2.2 Test equipment and inspection facilities.- Test equipment and inspection facilities shall be of accuracy appropriate to the tolerances for requirements specified herein and the applicable specification sheet.

4.2.3 Inspection conditions.- Unless otherwise specified herein, all examinations and tests shall be performed at 68° to 95°F at barometric pressure of 28 to 31 inches of mercury, and at a relative humidity of 80 percent, maximum.

4.2.4 Definition of inspection terms.- Definition of inspection terms not otherwise defined herein shall be as listed in MIL-STD-109.

4.2.5 Classification of inspection.- The inspection and testing of cables covered by this specification shall be classified as follows:

(a) Qualification inspection (see 4.3.1).
(b) Quality conformance inspection (see 4.3.2).
  1. Inspection of packaging (see 4.6).

4.3 Qualification and quality conformance inspection.

4.3.1 Qualification inspection.- Qualification inspection shall be in accordance with Table V and shall be performed at a laboratory satisfactory to the qualifying Government activity. (See 6.6).

4.3.1.1 Sample.- The sample submitted for qualification approval by the manufacturer shall be representative of the material which would normally be fabricated under his production methods and as specified in the appendix to this specification.

1A83080

TABLE V - QUALIFICATION TESTS

Test	Requirement Paragraph	Test Paragraph
Conductor:		
1. Coating	3.4.1.3	4.5.1.2
2. Conductor resistance	3.4.1.4	4.5.1.3
3. Elongation of Cu. strands	3.4.1.1	4.5.1.1
4. Ten. str., steel strands	3.4.1.2	4.5.1.1
Insulation:		
1. Ultimate elongation	3.4.2	4.5.2.1.1
2. Tensile strength	3.4.2	4.5.2.1.2
3. Accelerated aging	3.4.2.1	4.5.2.2 thru 4.5.2.2.1
4. Water absorption	3.4.3.3	4.5.2.5.3
5. Heat stability	3.4.4, 3.4.6.1	4.5.2.3
6. Shrinkage	3.4.2.2	4.5.2.2.2
Coding material:		
1. Stripe durability	3.4.5.4	4.5.2.4
2. Stripe conductivity	3.4.5.1.1	4.5.2.4.2
Sheath:		
1. Tension set	3.6.2.1	4.5.3.1.1
2. Ultimate elongation	3.6.2.1	4.5.3.1.2
3. Tensile strength	3.6.2.1	4.5.3.1.3
4. Tear strength	3.6.2.1	4.5.3.1.4
5. Accelerated aging	3.6.2.2	4.5.3.2
6. Oil resistance	3.6.2.3	4.5.3.3
7. Marking durability	3.6.5	4.5.2.4
Cable:		
1. Impact	3.7.2	4.5.4.1.1
2. Bend	3.7.2	4.5.4.1.1
3. Twist	3.7.2	4.5.4.1.1
4. Weight	3.7.4	4.4
5. Voltage test	3.7.3.1	4.5.4.2.2
6. Insulation resistance	3.7.3.2	4.5.4.2.3
7. Cold bend torque test	3.7.1.1	4.5.4.1.3
8. Ozone resistance	3.7.5	4.5.4.1.4
9. Capacitance	3.4.3.4.1	4.5.2.5.4
10. Attenuation	3.4.3.4.2	4.5.2.5.5
11. Impedance	3.4.3.4.3	4.5.2.5.6

4.3.2 Quality conformance inspection.

4.3.2.1 Acceptance inspection groups.- Acceptance inspection shall consist of groups A, B, and C.

4.3.2.2 Inspection lot.- An inspection lot shall consist of all cables of any one type produced under substantially the same conditions and offered for inspection at one time.

4.3.2.2.1 Lot rejection.- In the event that failure is incurred in the samples as specified herein, the lot represented by the samples shall be rejected. The contractor may screen out defectives or rework the lot and submit it again for quality conformance inspection.

4.3.2.3 Group A inspection.- Group A inspection shall consist of the examination and tests specified in Table VI. One sample from each 10,000 ft. of cable shall be inspected for the visual and dimensional requirements and conductor resistance. The voltage test for insulated conductors shall be conducted on each reel prior to cabling. The voltage test and insulation resistance test on completed cable shall be performed on the entire lot of finished cable submitted in accordance with 4.3.2.2.

TABLE VI - GROUP A INSPECTION

Examination or Test	Requirement Paragraph	Test Paragraph
Visual and Dimensional:		
Conductor	3.4.1	4.4
Color code	3.4.5 thru 3.4.5.3	4.4 and 4.5.2.4.2
Shields	3.4.6	4.4
Cabling	3.5 thru 3.5.5	4.4 & 4.4.1
Markings	3.6.4	4.4
Size and weight	3.7.4	4.4
Workmanship	3.8	4.4
Electrical:		
Conductor resistance	3.4.1.4	4.5.1.3
Voltage test (cable)	3.7.3.1	4.5.4.2.2
Insulation resistance	3.7.3.2	4.5.4.2.3
Voltage test (insulated conductors)	3.4.3.2	4.5.2.5.2 or 4.5.2.5.2.1
Shielded jacket	3.4.6.1	4.5.2.5.2

4.3.2.4 Group B inspection.- Group B inspection shall consist of the tests specified in Table VII. The inspector shall choose not less than one nor more than three sets of samples from each lot submitted for Group B inspection. Lot size for Group B inspection shall be not more than 1,000 lbs. for coating tests. Lot sizes for finished cable shall be limited to 25,000 feet. When specifically requested by the procuring activity, Group B inspection may be omitted on orders of 1,000 ft. or less, provided the particular cable type has previously been manufactured and tested by the manufacturer and data is on file.

1E83080

TABLE VII - GROUP B INSPECTION

Test	Requirement Paragraph	Test Paragraph
Conductor:		
Coating	3.4.1.3	4.5.1.2
Elongation of strands	3.4.1.1	4.5.1.1
Insulation:		
Physical properties	3.4.2	4.5.2 thru 4.5.2.1.2
Coding material:		
Stripe durability	3.4.5.4	4.5.2.4
Stripe conductivity	3.4.5.1.1	4.5.2.4.2
Sheath:		
Physical properties	3.6.2.3 3.6.2.1	4.5.3.1 thru 4.5.3.1.4; 4.5.3.3
Marking durability	3.6.5	4.5.2.4
Cable:		
Ozone resistance	3.7.5	4.5.4.1.4
Mechanical tests	3.7.2	4.5.4.1
Cold bend	3.7.1	4.5.4.1.2
Capacitance	3.4.3.4.1	4.5.2.5.4
Attenuation	3.4.3.4.2	4.5.2.5.5
Impedance	3.4.3.4.3	4.5.2.5.6

4.3.2.5 Group C inspection.- Group C inspection shall consist of the test specified in Table VIII. One sample shall be selected per each 100,000 ft. of cable or fraction thereof, not to exceed a total of five samples per order. Samples shall be selected periodically through the life of the contract to assure representative results.

TABLE VIII - GROUP C INSPECTION

Test	Requirement Paragraph	Test Paragraph
Heat stability	3.4.4; 3.4.6.1	4.5.2.3
Accelerated aging	3.4.2.1; 3.6.2.2	4.5.2.2,4.5.2.2.1 4.5.3.2
Water absorption	3.4.3.3	4.5.2.5.3
Shrinkage	3.4.2.2	4.5.2.2.2

4.3.2.5.1 Noncompliance.- If a sample fails to pass Group C inspection, the contractor shall take corrective action on the materials or process or both as warranted, and on all units of product which can be corrected and which were manufactured under essentially the same conditions,

with essentially the same materials, processes, etc., and which are considered subject to the same failure. Acceptance of the product shall be discontinued until corrective action acceptable to the Government has been taken.

4.4 Visual and dimensional.- The finished cables shall be given a visual and dimensional inspection for conformance to the applicable requirements of Table VI.

4.4.1 Filler and separator.- Data shall be supplied with each order certifying that when cotton is used as a filler material (3.5.1) or cable separator (3.5.5) the cotton has been fungus treated and conforms to the fungus test in accordance with MIL-STD-810.

4.4.2 Conductor joints or splices.- With each order of cable, the manufacturer shall furnish certification that jointing or splicing of all conductors used in the cable is in conformity with 3.4.1.5.

4.5 Test procedures.

4.5.1 Conductor tests.

4.5.1.1 Physical tests.- In order to determine the compliance of the copper conductor strands with the characteristics specified in 3.4.1.1, the elongation shall be measured by Method 3211 of FED-STD-228. Five percent of the strands but not less than seven strands taken away from any one conductor of the sample shall be so tested. Tensile strength of steel strands shall be in accordance with 3.4.1.2.

4.5.1.1.1 Retests.- If the results of physical tests on one conductor are found to be below the specified value for elongation, two more conductors shall be taken from the sample and 10 percent of the strands but not less than 10 strands taken from each of these conductors shall be tested. The average of all the strands tested shall determine acceptance or rejection of the lot.

4.5.1.2 Coating tests.- Tinned strands shall be tested for continuity and adhesion of coating in accordance with QQ-W-343.

4.5.1.3 Conductor resistance.- The individual conductors shall be tested in accordance with Method 6021 of FED-STD-228, except that the dc bridge measurements shall be made with an accuracy of 0.5 percent (see 3.4.1.4). To ascertain added length of conductor due to cabling, conductors shall be removed from a 5-foot length of the cable, their straightened length shall be measured, and the ratio of straightened length of conductor to original length of cable shall be computed.

4.5.2 Insulation compound.- Insulating compound shall be tested in accordance with the following physical and electrical tests to determine compliance with 3.4.2 and 3.4.3.

 1E13080

4.5.2.1 Physical tests.- These tests shall be made not sooner than 48 hours after vulcanization of the cable sheath. The method of conducting these tests shall be as outlined in the succeeding paragraphs. In all cases, the test temperature shall be between 68° to 83°F.

4.5.2.1.1 Ultimate elongation.- Ultimate elongation tests shall be made in accordance with Method 3031 of FED-STD-228.

4.5.2.1.2 Tensile strength.- Tensile strength tests shall be made using a straight specimen in accordance with Method 3021 of FED-STD-228.

4.5.2.2 Accelerated aging tests.- Specimens shall be oven aged at a temperatore of 208° to 212°F for 48 hours.

4.5.2.2.1 Depreciation in elongation and tensile strength.- After aging, the specimens shall be tested in accordance with 4.5.2.1.1 and 4.5.2.1.2 and the percent depreciation calculated.

4.5.2.2.2 Shrinkage.- An 8-inch specimen shall be cut from the insulated conductor. The polyamide jacket shall be removed. The specimen shall then be cut to 6 inches with the conductor flush with the insulation. The specimen shall be heated in a forced convection air oven at 210° ± 2°F for a period of 24 hours. The specimen shall be removed and allowed to return to room temperature, the amount the conductor extends beyond the insulation shrinkage shall be in accordance with 3.4.2.2.

4.5.2.3 Heat stability test (polyamide jackets).

4.5.2.3.1 Polyamide jackets over primary insulation.- A one foot specimen shall be bent around a metal mandrel six times the outside diameter of the specimen for two turns and taped down on its ends. The specimen and the mandrel shall be placed in a gravity convection type oven at a temperature of 200°F ± 5°F for a period of 24 hours. Remove specimen and mandrel from oven and cool in a silica gel desiccator or equal until it returns to room temperature (1 hour minimum). Remove from desiccator and straighten the specimen. The specimen shall be visually inspected for tears and cracks. Wrinkles shall not be cause for rejection.

4.5.2.3.2 Polyamide jackets over shield.- A sufficient length of specimen shall be used to insure at least six close turns when bent on a metal mandrel, six times the outside diameter of the specimen. Each turn shall be in contact with the next. The ends of the specimen shall be taped together in such a manner that the turns are held in place on the mandrel. The mandrel and specimen shall be suspended in a gravity convection type oven at a temperature of 300°F ± 5°F for a period of 15 minutes. The mandrel and specimen shall be removed from the oven and cooled in a silica gel desiccator or equal until the specimen is at room temperature (1 hour minimum). Remove from the desiccator and unwrap the coils. The specimen shall be visually inspected for tears and cracks. Wrinkles shall not be cause for rejection.

NOTE: During this test, the insulation will soften and flow. This shall not be cause for rejection.

4.5.2.4 Colored stripe tests.

4.5.2.4.1 Durability test.- A short specimen of finished wire or sheath shall be firmly clamped in a horizontal position with its upper longitudinal surface area freely exposed. A small steel mandrel (0.025 diameter ± 0.001) shall be repeatedly rubbed over the insulation surface at the stripe so that the longitudinal axis of the mandrel and specimen will be at right angles to each other. A weight shall be affixed to the jig holding the rubbing mandrel so that the combined jig and weight exerts a 500-gram thrust normal to the insulation surface. A motor-driven reciprocating cam mechanism and counter shall be used to permit an accurately measured number of abrasion strokes. The length of the stroke in one direction shall be 3/8 inch and the frequency of the stroke shall be 120 strokes per minute (each stroke consisting of a 180 degree-rotation of the eccentric drive mechanism). The direction of motion shall be along the axis of the wire or cable jacket and perpendicular to the axis of the mandrel. This procedure shall be repeated on one additional specimen selected from at least 50 feet apart. Specimens shall be examined for conformance with 3.4.5.4 and 3.6.5.

4.5.2.4.2 Surface resistance test.- The surface resistance of the black striped insulated conductors shall conform to 3.4.5.1.1 when tested in accordance with Method 6041 of FED-STD-228. All specimens, after having been provided with the required electrodes but prior to testing, shall be cleaned by the procedure described in the test method. In positioning the specimens in the test chamber, the specimens shall be so placed that their ends are a minimum of one inch from any wall of the chamber.

4.5.2.5 Electrical tests (properties).

4.5.2.5.1 Electrode spark test.- Method 6211 of FED-STD-228 shall be used in conducting the spark test except that the speed of the specimen through the electrode shall be adjusted so that contact between the electrode and any point on the insulation of the specimen will be maintained for at least 0.25 second. The use of voltmeter-equipped spark testers shall be optional (see 3.4.3.1).

4.5.2.5.2 Dielectric test (insulated conductors).- Each reel of insulated conductors shall be tested by the cable manufacturer in accordance with Method 6111 of FED-STD-228 except that the soak time shall be reduced to 4 hours without stirring the bath and with both ends of the conductor tied together and connected to the high voltage. The test shall be conducted after extrusion of the polyamide. There shall be no evidence of breakdown when tested at the voltages of 3.4.3.2.

1B13080

4.5.2.5.2.1 Impulse dielectric test.- The impulse dielectric test shall be performed in accordance with NEMA Standard No. HP-1-1973 to meet the requirements of 3.4.3.2 with the exception that if any dielectric failures occur they must be cut out or suitably identified for subsequent removal along with a minimum of 6 inches of conductor on each side of the fault.

4.5.2.5.3 Water absorption test.- Samples shall be removed from the finished cable and shall be thoroughly cleaned by scrubbing with water and a small brush or lintless cloth. The specimens shall be rinsed and dried by exposure to circulating air at a temperature of 120° ± 3°F for a period of 24 hours. Test specimens of the insulated conductor shall be made up into a coil with an inside diameter of not less than 2 inches. The specimens shall be supported by fitting the ends snugly through the cover of a vessel containing tap water. The specimens shall be of such length and so supported that not less than 5 feet of conductor is exposed below the plate and that the ends do not project more than 6 inches above the plate. The insulation shall be removed from the dnds for a distance of 1/2 inch. The water shall be maintained at a temperature of 120° ± 3°F. The conductors shall fit tightly to the cover, and the cover shall fit tightly to the vessel to prevent excessive evaporation. The level of the water shall be maintained flush with the side of the cover. The length of the conductor below the under side of the cover shall be taken as the length immersed. If the vessel is made of metal it shall be considered the electrical ground. If it is not of metal a ground plate of suitable area shall be immersed in the water. All metal parts other than the conductor under test shall be grounded. The capacitance shall be measured between the conductor and the ground, at 1,000 Hz, with a suitable alternating current bridge, with an accuracy of 1 pF of capacity and 0.001 power factor. All measurements shall be made at a temperature of 120° ± 3°F without disturbing the test specimen in any manner. The capacitance shall be recorded in microfarads per 1,000 feet of conductor immersed. The first measurement shall be made after 24 hours immersion at 120°F and shall be considered the original capacity. Subsequent measurements shall be made 7 days after the original measurements (see 3.4.3.3).

4.5.2.5.4 Capacitance.- Capacitance tests shall be made, on coaxial conductors, in accordance with MIL-C-17.

4.5.2.5.5 Attenuation.- Attenuation shall be measured, on coaxial conductors, in accordance with MIL-C-17.

4.5.2.5.6 Impedance.- The characteristic impedance shall be determined, on coaxial conductors, in accordance with MIL-C-17.

4.5.3 Sheath.- In order to determine the compliance of the sheath compound with the requirements of 3.6.2 the following test shall be made.

4.5.3.1 Physical tests.

1A43080

4.5.3.1.1 Tension set.- Except for the following, the maximum tension set shall be determined in accordance with Method 4411 of FED-STD-601: The minimum set shall be determined by elongating specimens until the 2-inch gage marks are 6 inches apart, releasing within 5 seconds and determining the distance between gage marks 1 minute after release. The set is the difference between this length and the original 2-inch gage length.

4.5.3.1.2 Ultimate elongation.- Ultimate elongation tests shall be made in accordance with Method 3031 of FED-STD-228.

4.5.3.1.3 Tensile strength.- Tensile strength tests shall be made in accordance with Method 3021 of FED-STD-228.

4.5.3.1.4 Tear strength.- Tear strength tests shall be made in accordance with Method 3111 of FED-STD-228.

4.5.3.2 Accelerated aging tests.- The accelerated aging tests shall be made in accordance with Method 4011 of FED-STD-228 and 3.6.2.2.

4.5.3.3 Oil resistance tests.- Oil resistance tests shall be made in accordance with Method 4221 of FED-STD-228 and 3.6.2.3.

4.5.4 Finished cable tests.

4.5.4.1 Mechanical tests.- Samples of the completed cable prepared in accordance with Figure 1 and connected in series (Figure 2) shall be subjected to the tests on Figures 3, 4 and 5 at a temperature of 68° to 95°F. In each of these tests, a 110 or a 220-volt, 60 Hz, ac potential with a prescribed load current of not less than 0.5 ampere shall be indicated on a recording ammeter to permit the determination of failure caused either by broken conductors or by short circuits between conductors. Failure due to either cause shall terminate the test of a sample. The test procedures shown on Figures 1, 2, 3, 4, and 5 are approved and a similar method shall be followed in making all mechanical tests. (See 3.7.2). The value obtained shall be derived from tests of three samples for the bend and twist and six samples for the impact. If any of the samples tested do not comply with the requirements set forth, the lot shall be rejected.

4.5.4.1.1 High and low temperature.- Specimens shall be temperature-stabilized for a minimum of 48 hours at 160° ± 2°F and while still at this temperature, tested for impact, bend and twist for a minimum of one half the cycles specified in accordance with 3.7.2. The temperature shall be gradually reduced to -65° ± 2°F and the specimens permitted to remain at this temperature for a minimum of 48 hours. While still exposed at this temperature, the impact, bend, and twist tests shall be conducted for a minimum of one half the cycles specified in accordance with 3.7.2. At the conclusion of the test the specimens shall be returned to room temperature. If failure occurs in any of the specimens an additional set of specimens shall be tested. Further evidence of failure will result in the withholding of approval (see appendix in this specification).

 2A33080

4.5.4.1.2 Cold bend.- Two specimens of cable shall be subjected to cold bend testing at a temperature of -65° ± 2°F. The specimens shall be placed in the cold chamber in a nonflexed position and maintained at the required temperature for a minimum of 48 hours. Without removal from the cold chamber each specimen shall be bent around a mandrel in accordance with Table IX at a rate of five turns per minute for one complete turn. Upon removal from the cold chamber the specimens shall be examined for conformance with 3.7.1. The insulated conductors shall be removed from the jacket and tested by application of the test voltages specified in the applicable specification sheet.

4.5.4.1.3 Torque test.- Two specimens of cable shall be subjected to cold bend testing at a temperature of -65° ± 2°F. Prior to cold bend testing the specimens shall be oven-aged at a temperature of 160° ± 2°F for 2 days. After oven aging, the specimens shall be placed in the cold chamber in a nonflexed position and maintained at the required temperature for a minimum of 48 hours prior to testing. Without removal from the cold chamber, each specimen shall be bent around a mandrel in accordance with Table IX at a rate of five turns per minute for one complete turn. The torque required to accomplish the turn shall be in accordance with 3.7.1.1. At the conclusion of the test the temperature shall be gradually returned to room temperature and examined for conformance with 3.7.1. The insulated conductors shall be removed from the jacket and tested by application of the test voltage specified in the applicable specification sheet for 1 minute while submerged in water.

TABLE IX - COLD BEND MANDREL SIZES

Cable Outside Diameter (OD) Inch		Mandrel Size (Max) Inch	
From	To	Unshielded	Shielded
.000	.300	1.0 x OD	3.0 x OD
.301	.350	2.0 x OD	3.0 x OD
.351	.450	2.5 x OD	3.0 x OD
.451	.550	3.0 x OD	3.0 x OD
.551	.750	4.0 x OD	4.0 x OD
.751	.950	5.0 x OD	5.0 x OD
.951	1.500	6.0 x OD	6.0 x OD
1.501	2.000	8.0 x OD	8.0 x OD
2.001	and over	10.0 x OD	10.0 x OD

4.5.4.1.4 Ozone resistance.- Two samples shall be prepared for ozone testing by bending around mandrels as indicated below:

2B23080

Cable Outside Diameter (inch)	Mandrel Diameter (inch)
- .500	4 x Cable OD
.501 - .750	5 x Cable OD
.751 - 1.250	6 x Cable OD
1.251 - 1.750	8 x Cable OD
1.751 - 2.250	10 x Cable OD

The mandrels may be removed after bending, provided the diameter of bend of the cable samples is maintained for a minimum of 180 degrees of bend. Prior to placing the samples into the ozone chamber, the samples shall be wiped with a clean cloth to remove dirt, sweat, and surface moisture. The samples shall be exposed in accordance with ASTM-D-1149-64(1970) except that the air shall have an ozone concentration of 50 ± 3 parts per 100,000,000 (by volume) and circulated at 120°F for a period of 7 days. Upon removal from the ozone chamber the samples shall be examined for conformance with 3.7.5.

4.5.4.2 Electrical tests.

4.5.4.2.1 Test equipment.- The contractor shall supply suitable bridge equipment, source of testing current and other necessary equipment required for accurately making the electrical measurements specified. The dc bridge measurements shall be made within an accuracy of 0.5 percent. The power source shall be capable of delivering a testing potential of the magnitude and frequency specified, and shall be equipped with a variable control and meter for regulating and measuring output. The contractor shall make available to the contracting officer or inspector a description, wiring diagram, and operating instructions covering the equipment to be employed. The inspector may satisfy himself by checking the equipment against calibrated standards so that accurate and satisfactory results are obtained.

4.5.4.2.2 Voltage test (finished cable).- With alternate conductors bunched in two groups, the voltage shall be applied between conductors, and between conductors and ground for a period of 1 minute on each complete length of cable. Conductors without individual shields may be tested singly against all other conductors or arranged in two or more groups, provided full voltage is impressed between adjacent conductors. Conductors with individual shields and shielded pairs may be arranged in groups with voltage applied between conductors and grounded shields. The test voltage shall be attained by raising the voltage from zero to the value specified within 30 seconds (see 3.7.3.1). Where shield isolation is specified for single conductors and complexes the voltage shall be 1500 volts. Specimens shall not be submerged in water for the voltage test.

4.5.4.2.3 Insulation resistance.- Immediately after the voltage test, the cable shall be tested dry for insulation resistance, according to Method 6031 of FED-STD-228, except that the test potential shall be 200-volt minimum, and the temperature correction factors shall be supplied and certified by the contractor. Except where otherwise specified in the applicable specification sheet conductors may be tested singly or grouped in accordance with the connections used in the voltage test of 4.5.4.2.2 (see 3.7.3.2).

4.6 Inspection of packaging.- Packaging and packing shall be inspected in accordance with the requirements and methods specified in MIL-C-12000.

5. PREPARATION FOR DELIVERY

5.1 Level A, B, and C.

5.1.1 Packaging and packing.- The cables shall be cleaned, preserved, packaged, packed, and marked in accordance with MIL-C-12000.

6. NOTES

6.1 Intended use.- Cables covered by this specification are used for interconnecting fire control instruments, generator units, weapons in antiaircraft artillery and guided missile systems. Cables are intended for use where oil, ozone, and weather resistance are of major importance, and flexibility over an ambient temperature range of -65° and +160°F is necessary. Cables are stretched on the ground or laid in a shallow trench where the terrain may vary from swamp to dry rocky ground. There is frequent reeling and unreeling causing kinking, twisting, and dragging across the ground.

6.2 Ordering data.

6.2.1 Cables for which specification sheets have been established.- Procurement documents should specify the following:

a. Title, number, and date of this specification.
b. Title, number, and date of the applicable specification sheet, type designation, and the length of cable required.
c. Whether empty reels will be returned to contractor at contractor's expense.
d. Level of protection required.
e. If all white or natural insulation may be substituted for color coding (see 3.4.5).
f. Whether conductor sizes shall be included in the cable identification (see 3.6.4).
g. Required constructional changes such as deletion of marking, increase in shielding, or other minor deviations that do not affect the performance requirements.
h. Whether samples for mechanical tests are required and the laboratory where the tests will be conducted (see 4.2.1).
i. Whether shields, if any, are driven.

2E23080

6.2.2 Cables for which specification sheets have not been established.- Procurement documents should specify the following in addition to the information required in 6.2.1:

a. Title, number, and date of this specification.
b. All required specific design data required by the Government activity.
c. When design data is established by the contractor, that such data be furnished to the contracting officer and the qualifying Government agency.
d. That new type designation be followed with an X following the designation for identification.

6.3 New types.- Upon approval for production of new types complying with the performance requirements of this specification, responsible Government agencies should request the custodian to include the new types in the specification by removing the X after the designation.

6.4 Conversion list.- A list of previously used Roman numerals are shown below for conversion purposes. Type numbers and their related specification sheets are included in this section for information.

CONVERSION LIST

XXIII	020405	VI	090675
XXIV	020425	VIII	130685
XXV	020555	X	150885
XXVI	020610	XXI	150915S
I	020645	XXXVI	S160878S
XXXI	030565	XXXII	S161375S
XXX	030635	XXXVI	S190965S
II	030675	XIII	200935
XVI	030945	XIX	211055
XXIX	031115	XXII	211115S
XXXIII	S031170	XX	211345
XVII	031355	P26	261065S
XXXV	S031640	D37	371065S
FCPD No. 86	040695		
XXXIV	S080625		

6.4.1 Superseded classification references.- Listed below for reference purposes only are obsolete classification data appearing in superseded versions of this document and in older drawings. Reference to class, grade or insulation compound is no longer required since this revised specification covers only one sheath material, one grade of cable and one type insulation compound for all previously referenced classifications.

2833080

CLASSIFICATION	PREVIOUS DESIGNATION	PRESENT COVERAGE
Class (Sheath)	A, B, C	C
Grade (Cable)	1, 2	1
	A, B	A
Comp (Insulation)	A, B	Polyethylene
	C, D, E	Polyethylene

Obsolete type designations were preceded by an identifying Grade and Class symbol.

Example: 1A371065S = A Grade 1 Cable with a Class A Sheath.

TYPE NUMBERS

MIL-C-13777/1-

020403	030470	S031170	040657	041488
020405	030485	031355	040695	041635
020425	030565	S031640	040870	041655
S020500	030575S	040440	041065	041754
020555	030635	040470	041135	S041886
020610	030675	040500	041215	050502
020645	030945	040560	041260	041210
030445	031115	040635S	041335	

MIL-C-13777/2-

060410S	070618	080766	100660	150885
060480	070730	080840	100870	150915S
060565	070823S	080918	101091	
061530	070930	090540	120620	
061805	071090	090675	120650S	
070590	S080625	100595	130685	

MIL-C-13777/3-

160636	S161375S	180675	S190965S	200935
S160878S	170752	180848	191110S	
161065S	170874	S190875	191140	

MIL-C-13777/4-

211055	S221385	241215	280805
211115S	240966	261065S	321355
211345	241215S	271100S	

2A23080

TYPE NUMBERS (Cont'd)

MIL-C-13777/5-

341273S	371142	391115S	S462080S
360860	371193S	401485S	471374S
S361055	371314S	401582S	S521235
361420S	371327S	420950	
371065S	371517S	421010SC	

MIL-C-13777/6-

601330	601665S	601845S	651125
601495S	601734S	601931S	782166S

6.5 Definitions.

6.5.1 Mold.- The word mold as used in this specification means a container to hold the polychloroprene sheath in shape during the vulcanizing and curing processes.

6.5.2 Length of lay.- The length of lay of any helically wound strand or insulated conductor is the axial length of one complete turn of the helix, in inches.

6.6 Qualification.- With respect to products requiring qualification, awards will be made only for such products as have, prior to the time set for opening of bids, been tested and approved for inclusion in the applicable Qualified Products List whether or not such products have actually been so listed by that date. The attention of the suppliers is called to this requirement, and manufacturers are urged to arrange to have the products that they propose to offer to the Federal Government, tested for qualification in order that they may be eligible to be awarded contracts or orders for the products covered by this specification. Information pertaining to qualification of products covered by this specification may be obtained from the Commander, Frankford Arsenal, Philadelphia, PA 19137, Attn: SARFA-MDM.

Custodians:
Army - MU
Navy - AS
Air Force - 80

Preparing activity:
Army - MU

(Project 6145-0675)

Reviewer:
Army - MI, EL, WC, AT, ME
DSA - IS

Users:
Navy - MC, EC
Air Force - 11, 17

2A63080

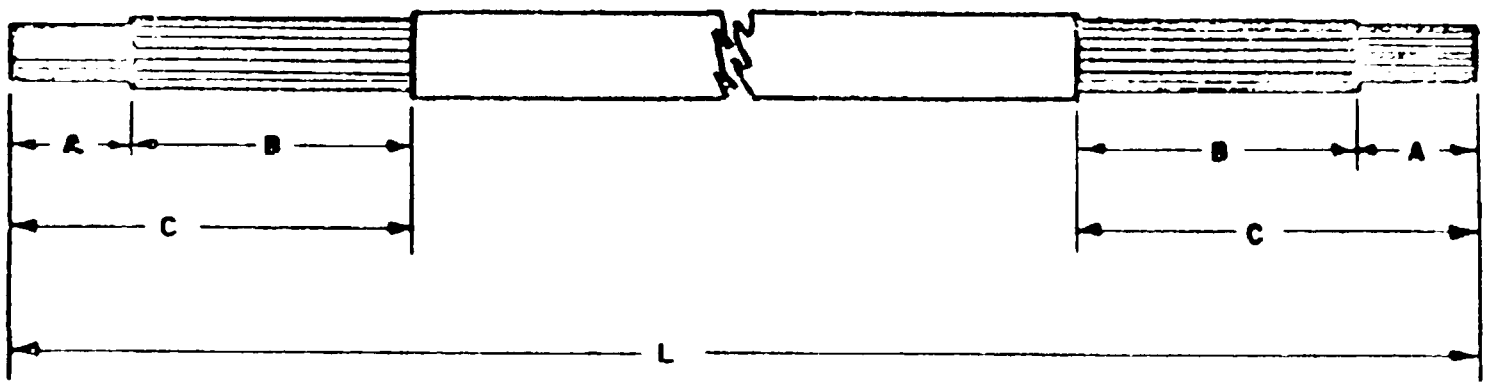

A = 1-1/2"
B = 2"
C = 3-1/2"

SET OF SAMPLES TO CONSIST OF

6 SAMPLES FOR IMPACT, L = 16"
3 SAMPLES FOR BEND, L = 42"
3 SAMPLES FOR TWIST, L = 66"

FIGURE 1
CABLE SAMPLES

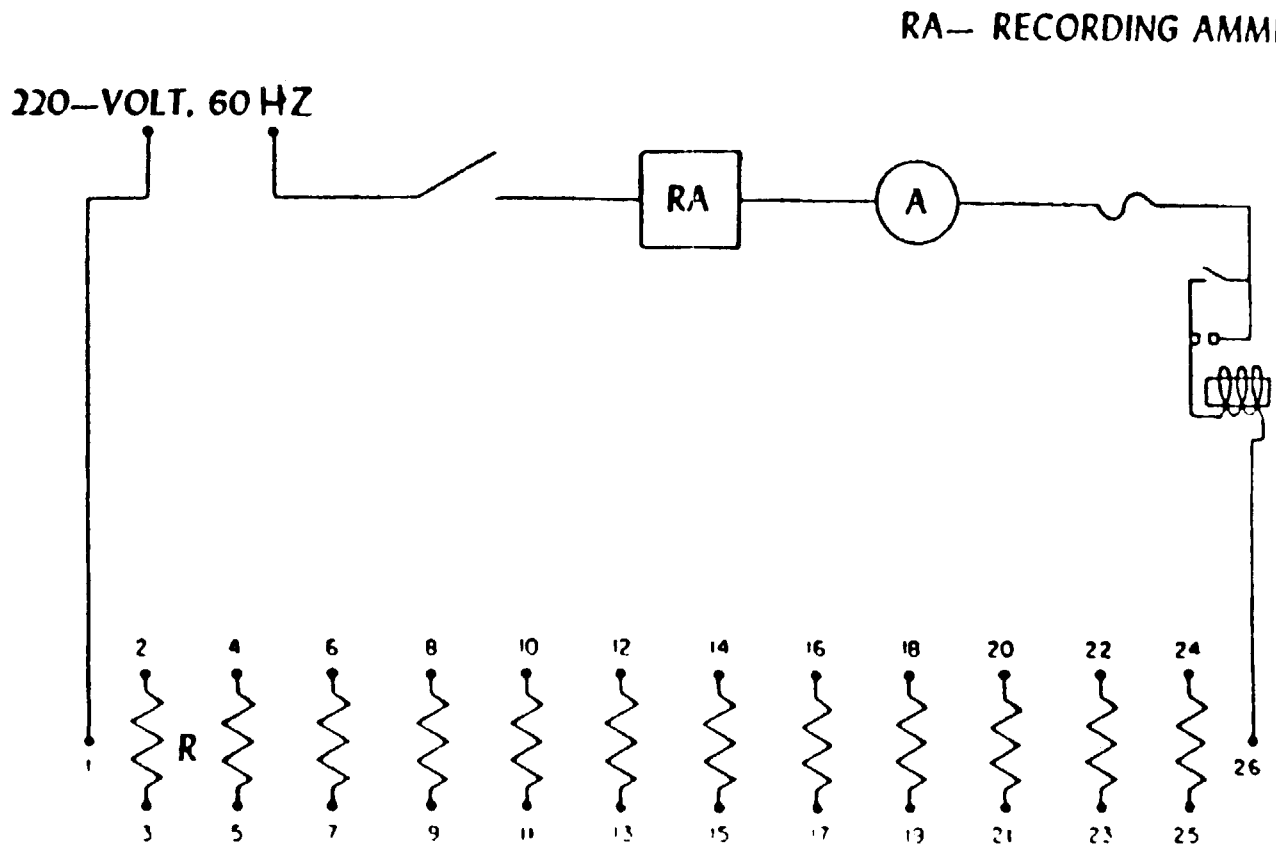

R—20 OHM RESISTOR
A—AMMETER

FIXTURE, CABLE TESTING ELECTRICAL CIRCUIT

FIGURE 2

2E6308

MTL-C-13770

D=3.0 FOR CABLE OD TO 1.000
D=4.5 FOR CABLE OD 1.0005 TO 1.250
D= 6" FOR CABLE OD 1.255 TO 1.500
D=9" FOR CABLE OD 1.501 TO 1.750
1.750 AND LARGER- TEST NOT APPLICABLE

TEST SPECIMEN STANDARD LENGTH 66"

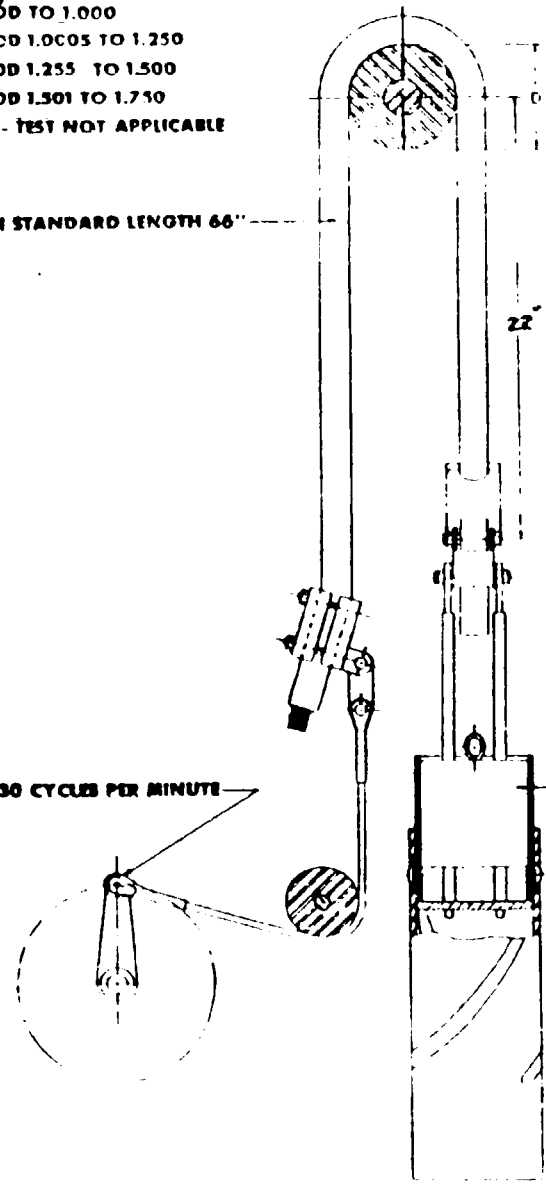

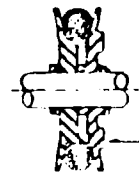

ADJUSTABLE SHEAVE
ADJUST TO CABLE
DIAMETER PLUS .100 MAX

NOTES
1. TWIST PER INCH OF ACTIVE LENGTH TO BE KEPT CONSTANT WHEN CHANGING PULLEY AND LARGER CLAMPING ARM
2. DURING T f A 60 HERTZ CURRENT OF NOT LESS THAN 0.5 AMPS TO TO FLOW THROUGH CONDUCTORS.

ARM DRIVEN AT 30 CYCLES PER MINUTE

50 LBS FOR COPPER CONTENT MORE THAN 14000 CM
20 LBS FOR COPPER CONTENT- NO MORE THAN 14000 CM

8:VERTICAL MOTION
90° TWIST FROM CENTER
(TOTAL TRAVEL 180°)

FIGURE 3
TWIST TEST,
FIXTURE, CABLE TESTING

NOTE

1. DURING TEST A 60 HERTZ CURRENT OF NOT LESS THAN 0.5 AMPS TO FLOW THROUGH CONDUCTORS.

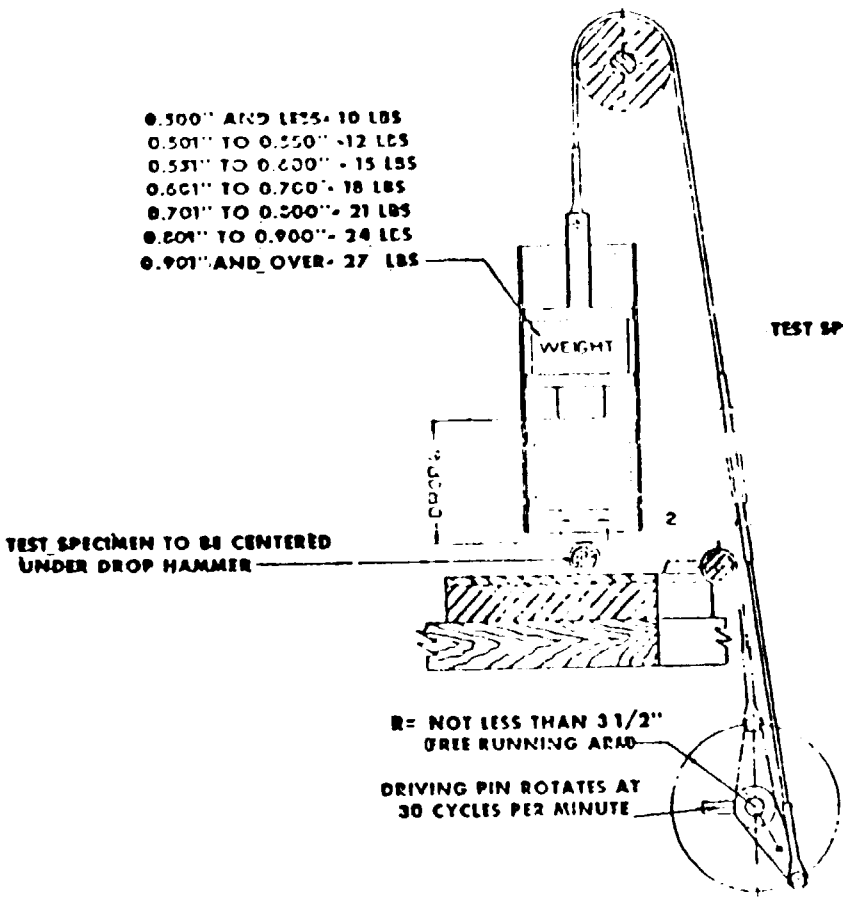

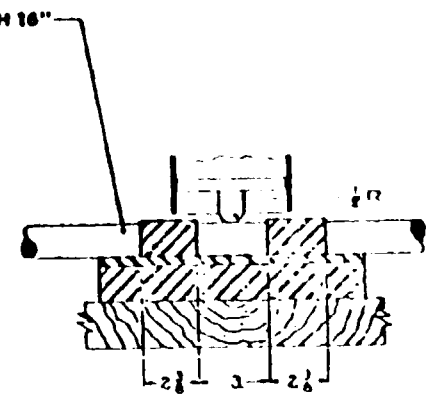

METHOD OF CLAMPING TEST SPECIMEN

FIGURE 4
IMPACT TEST,
FIXTURE, CABLE TESTING

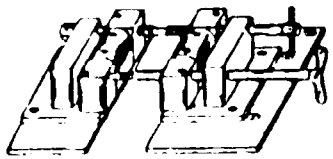

INSERT VIEW WITHOUT CABLE

NOTES

1. DURING TEST A 60 HERTZ CURRENT OF NOT LESS THAN 0.5 AMPS FLOW THROUGH CONDUCTORS
2. 1 CYCLE SHALL CONSIST OF 90° BEND EACH SIDE & RETURN TO ORIGINAL POSITION

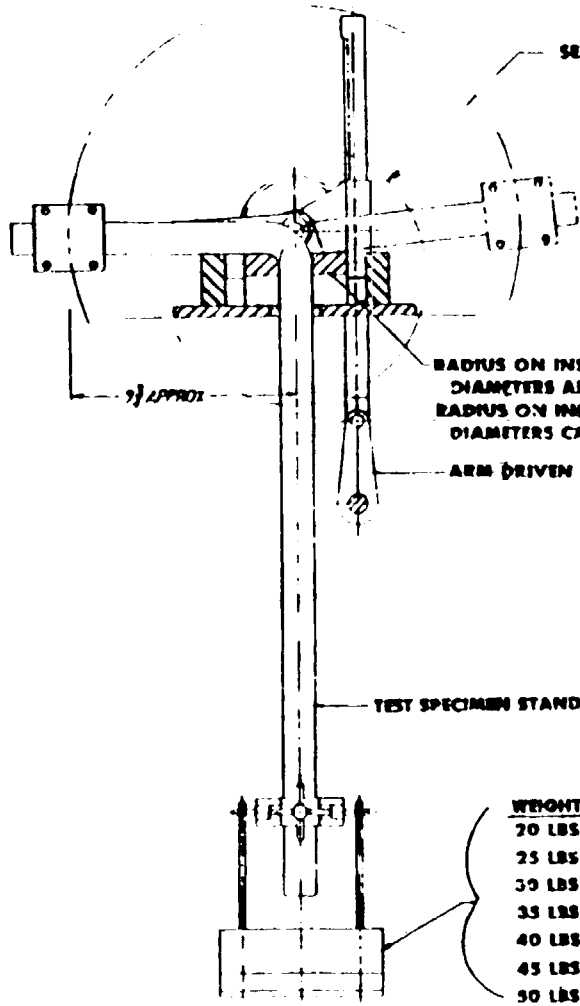

WEIGHT	CMA
20 LBS	14000 AND LESS
25 LBS	14001 - 17500
30 LBS	17501- 21000
35 LBS	21001- 24500
40 LBS	24501- 28000
45 LBS	28001- 31000
50 LBS	31001- UP

FIGURE 5
BEND TEST,
FIXTURE, CABLE TESTING

APPENDIX

PROCEDURE FOR QUALIFICATION INSPECTION

10. SCOPE

10.1 This Appendix details the procedure for submission of samples, with related data for qualification inspection of cable types covered by this specification. The procedure for extending qualification of the required sample to other cable types covered by this specification is also outlined herein.

20. SUBMISSION

20.1 Sample.- One 20-foot sample of unstranded conductor strand for each size of strand in the cable shall be submitted for physical and coating tests. Two sets of samples shall be submitted for mechanical tests. A set of stripped samples conforming to Figure 1 shall consist of: six 16-inch lengths for impact; three 66-inch lengths for twist; three 42-inch lengths for bend. Lengths for the twist test for cables 1-1/2-inch diameter and larger shall be 80 inches. One additional 50 foot length shall be submitted for all other tests. When submitting type 421010SC this footage should be increased to 100 feet. Three copies of certified test data on approved format (factory report) as contained herein should accompany submission.

30. EXTENT OF QUALIFICATION

30.1 Representative type submission.- Approval of the specified qualification test sample will extend qualification approval to all applicable cable types. The Qualified Products List (QPL) identifying group number represents the above outlined coverage. See Table X.

 2A83080

TABLE X - REPRESENTATIVE TYPE SUBMISSION

QPL Identifying Group No.	Qualification Test Sample	Extension of Qualification Approval Cable Type Designations			
3	040870	020610	020645	030565	041210
		030635	030675	030945	
		031115	S031170	031355	
		S031640	040695	040870	
		041065	041135	041215	
		041260	041335	041488	
		041635	041655	041754	
		061805	S161375S	S041886	
		S221385	782166S	211345	
6	421010SC	020405	020425	020555	030470
		030485	030575S	040500	040635S
		040657	060565	070618	070823S
		070930	071090	S080625	090540
		090675	100660	130685	150885
		150915S	160636	S160878S	161065S
		170752	170874	S190875	S190965S
		191110S	200935	211055	211115S
		240966	241215S	261065S	321355
		371065S	371142	371517S	391115S
		421010SC	S462080S	601330	S521235
		601931S	601665S	601734S	601495S
					601845S

2B53080

QUALIFICATION TEST
(Factory Report)

Submitted by XYZ Cable Co. Date.....Cable Type No....
Purchase Order No..... Tape Marker.....Ft to...Ft

I. Electrical tests and weight:

Reel No.	Length ft	Voltage Test Volts	Insulation Resistance meg-1000 ft	Conductor Resistance ohms/1000 ft Average	Conductor Resistance ohms/1000 ft Maximum	Weight lbs/1000 ft

II. Coating test:

1. Average number of cycles passed on continuity of coating test.
2. Minimum number of cycles passed on continuity of coating test.
3. Average number of cycles passed on adherence of coating test.
4. Minimum number of cycles passed on adherence of coating test.

III. Results of physical and mechanical tests:

1. Copper Conductor Strands:

   1. Size of strand No.....
   2. Number of strands tested.....
   3. Average elongation.....
   4. Maximum elongation deviation from average.....inches.
      For retest, repeat 1 through 4.

2. Steel Strands:

   1. Number of strands tested.....
   2. Average tensile strength.....psi.
   3. Average diameter.....inches.

3. Insulation Compound:

   1. Physical:

	Original	Aged
(a) Ult. elongation, in. (min).	.....	.....
(b) Tensile strength, psi (min).	.....	.....

   2. Water Absorption:

   (a) Original capacity.....picofarads.
   (b) Capacity after 7-days immersion.....picofarads.

2E83080

3. Thickness of Insulating Wall:

(a) Conductor size No..... .....inches.
(b) Conductor size No..... .....inches.

4. Sheath Compound:

1. Physical:

	Original	Oxygen Aged	Oil Aged
(a) Tear strength lb/in. (min).			
(b) Tension set in. (max).			
(c) Ult. elongation in. (min).			
(d) Tensile strength psi (min).			

2. Thickness of Jacket Wall.....inches.
No. of Layers:

5. Cable:

1. Mechanical Tests:

(a) Minimum impact.....cycles.
(b) Minimum bend.....cycles.
(c) Minimum twist.....cycles.

2. Maximum diameter.

3. Low temperature test - remarks on performance.....°F.

4. Ozone test results.

It is hereby certified that the above values are true and correct, and in accordance with Specification

Signature

2E53080

INSTRUCTIONS In a continuing effort to make our standardization documents better, the DoD provides this form for use in submitting comments and suggestions for improvements All users of military standardization documents are invited to provide suggestions This form may be detached, folded along the lines indicated, taped along the loose edge *(DO NOT STAPLE)*, and mailed. In block 5, be as specific as possible about particular problem areas such as wording which required interpretation, was too rigid, restrictive, loose, ambiguous, or was incompatible, and give proposed wording changes which would alleviate the problems Enter in block 6 any remarks not related to a specific paragraph of the document. If block 7 is filled out, an acknowledgement will be mailed to you within 30 days to let you know that your comments were received and are being considered

NOTE This form may not be used to request copies of documents, nor to request waivers, deviations, or clarification of specification requirements on current contracts Comments submitted on this form do not constitute or imply authorization to waive any portion of the referenced document(s) or to amend contractual requirements.

(Fold along this line)

(Fold along this line)

DEPARTMENT OF THE ARMY

NO POSTAGE NECESSARY IF MAILED IN THE UNITED STATES

OFFICIAL BUSINESS
PENALTY FOR PRIVATE USE $300

BUSINESS REPLY MAIL
FIRST CLASS PERMIT NO 12062 WASHINGTON D C

POSTAGE WILL BE PAID BY THE DEPARTMENT OF THE ARMY

Commander
US Army Armament Research and Development Command
ATTN: DRDAR-TST-S
Dover, NJ 07801

(TO DETACH THIS FORM, CUT ALONG THIS LINE.)

STANDARDIZATION DOCUMENT IMPROVEMENT PROPOSAL

(See Instructions – Reverse Side)

1. DOCUMENT NUMBER

2. DOCUMENT TITLE

3a. NAME OF SUBMITTING ORGANIZATION

4. TYPE OF ORGANIZATION (Mark one)

- ☐ VENDOR
- ☐ USER
- ☐ MANUFACTURER
- ☐ OTHER (Specify): _____

b. ADDRESS (Street, City, State, ZIP Code)

5. PROBLEM AREAS

a. Paragraph Number and Wording:

b. Recommended Wording:

c. Reason/Rationale for Recommendation:

6. REMARKS

7a. NAME OF SUBMITTER (Last, First, MI) – Optional

b. WORK TELEPHONE NUMBER (Include Area Code) – Optional

c. MAILING ADDRESS (Street, City, State, ZIP Code) – Optional

8. DATE OF SUBMISSION (YYMMDD)

DD FORM 1426, 82 MAR

PREVIOUS EDITION IS OBSOLETE.