INCH-POUND

MIL-C-13486C
6 June 1989
SUPERSEDING
MIL-C-13486B
2 June 1964

MILITARY SPECIFICATION

CABLES, SPECIAL PURPOSE, ELECTRICAL: LOW-TENSION, HEAVY-DUTY, SINGLE-CONDUCTOR AND MULTICONDUCTOR, SHIELDED AND UNSHIELDED, GENERAL SPECIFICATION FOR

This specification is approved for use by all Departments and Agencies of the Department of Defense.

1. SCOPE

1.1 Scope. This specification covers two types (shielded and unshielded) of insulated, heavy-duty, single- and multiconductor, electrical cables for use in low-tension circuits (see 6.1).

1.2 Classification. Cable shall be of the following types and classes, as specified (see 6.2):

Type I	- Unshielded
Type II	- Shielded
Class A	- Single Conductor
Class B	- Multiconductor

1.2.1 Size and arrangement of conductors. Cable shall be furnished in the size or combination of sizes and arrangement of conductors shown on the applicable specification sheet or drawing (see 6.2).

Beneficial comments (recommendations, additions, deletions) and any pertinent data which may be of use in improving this document should be addressed to: U.S. Army Tank-Automotive Command, ATTN: AMSTA-GDS, Warren, MI 48397-5000, by using the self-addressed Standardization Document Improvement Proposal (DD Form 1426) appearing at the end of this document or by letter.

AMSC N/A FSC 6145

DISTRIBUTION STATEMENT A. Approved for public release; distribution is unlimited.

2. APPLICABLE DOCUMENTS

2.1 Government documents.

2.1.1 Specifications, standards, and handbooks. The following specifications, standards, and handbooks form a part of this document to the extent specified herein. Unless otherwise specified, the issues of these documents are those listed in the issue of the Department of Defense Index of Specifications and Standards (DODISS) and supplement thereto, cited in the solicitation (see 6.2).

SPECIFICATIONS

FEDERAL

O-A-548	- Antifreeze/Coolant, Engine: Ethylene Glycol, Inhibited, Concentrated.
QQ-W-343	- Wire, Electrical, Copper (Uninsulated).
VV-L-791	- Lubricants, Liquid Fuels, and Related Products; Methods of Inspection, Sampling, and Testing.

MILITARY

MIL-C-12000	- Cable, Cord, and Wire, Electric; Packaging of.
MIL-F-13927	- Fungus Resistance Test; Automotive Components.

(see supplement 1 for list of associated specifications.)

STANDARDS

MILITARY

MIL-STD-105	- Sampling Procedures and Tables for Inspection by Attributes.

(Unless otherwise indicated, copies of federal and military specifications, standards, and handbooks are available from the Naval Publications and Forms Center, (ATTN: NPODS), 5801 Tabor Avenue, Philadelphia, PA 19120-5099.)

2.2 Order of precedence. In the event of a conflict between the text of this document and the references cited herein (except for associated specification sheets), the text of this document takes precedence. Nothing in this document, however, supersedes applicable laws and regulations unless a specific exemption has been obtained.

3. REQUIREMENTS

3.1 Qualification. Cables furnished under this specification shall be products which are authorized by the qualifying activity for listing on the applicable qualified products list (QPL) at the time of award of contract (see 4.4 and 6.3).

3.2 Specification sheets. The individual item requirements shall be as specified herein and in accordance with the applicable specification sheet (see 6.2). In the event of any conflict between the requirements of this specification and the specification sheet, the latter shall govern.

3.3 Materials.

3.3.1 Strands. The individual conductor strands shall be made of soft or drawn and annealed, coated, type S, solid copper wire conforming to the applicable requirements of QQ-W-343. The strands shall be coated as specified therein using any applicable material specified (see 4.7.1 and 6.4.10).

3.3.2 Insulation. The insulation shall be such as to meet the construction and performance requirements specified herein (see 4.7.1).

3.3.3 Tape or braid. The tape (see 6.4.11) or braid (see 6.4.1) shall be free from any substance that may have a deteriorating affect on the insulation or on the sheath (see 6.4.6). Further, the tape or braid shall not be adversely affected by the compounding ingredients of the insulation or sheath (see 4.7.1).

3.3.4 Sheath. The sheath shall be made of material which meets the performance requirements in 3.5.1 through 3.5.12. A polychloroprene based material is preferred (see 4.7.1).

3.3.5 Shielding (type II only). The individual strands for the shielding shall be made of the same material as specified in 3.3.1 for the conductor strands. The American Wire Gage (AWG) size of the individual strands shall be 34 (see 4.7.2 and 6.4.7).

3.3.6 Separator. The separator shall be made of a fungus resistant material which shall be free of any substance that would have a deteriorating effect on the insulation or conductor. Further, the separator itself shall not be adversely affected by compounding ingredients used in the cable construction or process (see 4.7.1).

3.3.7 Recycled, virgin, and reclaimed materials. There are no requirements for the exclusive use of virgin materials. The use of recycled or reclaimed (recovered) materials is acceptable provided that all other requirements of this specification are met (see 4.7.1 and 6.4.4).

3.4 Construction. Cable construction shall be in accordance with the applicable specification sheet or detail drawing for the military Part or Identifying Number (PIN) specified by the acquisition activity. The length of the cable shall be as specified in the detail drawing or as specified by the acquisition activity. Cable construction shall be subject to the clarifications and the additional requirements of 3.4.1 through 3.4.4.3 (see 4.7.1, 4.7.2, 6.2, and 6.5).

3.4.1 Conductors. Conductors shall consist of individual strands (see 6.4.2). The strands shall be free from abrasions and from kinks and flats. The conductors shall be continuous throughout their length except joints in individual strands shall be in accordance with 3.4.1.3.1 or 3.4.1.3.2, as applicable. The conductor shall be intact and in clean condition for soldering when the separator is stripped from it. The presence of any residue or broken strands shall be sufficient cause for rejection (see 4.7.2).

3.4.1.1 Cross section. The cross section of any conductor shall conform to the applicable requirements specified in table I (see 4.7.2).

TABLE I. Constructional requirements for conductors.

Conductor size 1/	Minimum area (circular mils)	Minimum number of strands	Maximum diameter of stranded conductor (mils)
20	985	10	41.0
18	1,575	16	52.0
16	2,360	19	61.0
14	3,753	19	76.0
12	5,966	19	96.0
10	10,338	105	132.0
8	16,180	133	176.0
6	25,725	133	218.0
4	40,905	133	272.0
2	65,495	663	345.0
1	80,170	812	384.0
0	101,235	1,033	432.0
00	130,990	1,327	490.0
000	163,985	1,661	548.0
0000	207,715	2,104	615.0

1/ AWG size.

3.4.1.2 Stranding. Stranding of the conductor shall be left or right-hand lay and, at the option of the contractor, may be bunched, concentric, or rope lay. When an uninsulated portion is cut, the stranding shall not tend to unlay and the completed conductor shall not tend to spread out (see 4.7.2).

3.4.1.3 Joints.

3.4.1.3.1 Sizes 16 to 0000. When the conductor is size 16 to 0000 inclusive, joints shall be made by butt brazing or twisting strands together. Individual joints shall occur no closer together than 1 foot. In no case shall the whole conductor be spliced at one point (see 4.7.2).

3.4.1.3.2 Sizes 18 and 20. When the conductor is size 18 or 20, joints shall be made by butt brazing. Individual joints shall be finished off so that the conductor diameter is not increased at the point of brazing. Joints shall not occur closer together than 10 feet. In no case shall the whole conductor be spliced at one point (see 4.7.2).

3.4.2 Separator. A mechanical or chemical separator shall be applied between the conductor and the insulation to prevent deterioration of the insulating compound and to provide for its easy removal using commercial stripping procedures (see 4.7.2).

3.4.3 Insulation. The insulating compound shall form a close fit over the separator without adherence. As applied, the compound shall be seamless and shall be free of any foreign material, which, under an illumination of 15 to 25 foot-candles, would be visible to a person having 20/20 normal or corrected vision. The insulation shall meet the performance requirements in 3.5.1 through 3.5.12 (see 4.7.2).

3.4.4 Shielding (type II only). Shielding of cables shall be in accordance with the applicable specification sheet or detail drawing and 3.4.4.1 through 3.4.4.3 (see 4.7.1).

3.4.4.1 Splices. Broken or spliced strands shall not occur more than once in any 4 feet of cable length (see 4.7.2).

3.4.4.2 Coverage. The shielding shall provide not less than 85 percent (%) coverage of the surface of the underlying cable components. Percent of coverage shall be calculated as follows (see 4.7.2):

Percent of coverage = $(2F-F^2)\ 100$

$$F = \frac{ND}{P\ (\text{Cos angle of advance})}$$

N = Number of parallel strands between successive turns of a selected marker strand plus the selected strand.

D = Diameter of a single strand.

Angle of advance = Angle whose tangent equals P/C.

P = Pitch of braid measured along the axis of the braid.

C = 3.14 (Outside diameter of cable - 2D).

3.4.4.3 Grounding of shielding (class B only). Shielded insulated conductors (see 6.4.3) of multiconductor cable shall be electrically connected in such a manner that grounding of the shielding of one insulated conductor will result in grounding of all shielding within the outer sheath (see 4.7.1).

3.4.5 Concentricity. The minimum wall thickness (see 3.4.5.1) of the cross section of the insulation around each conductor shall be at least 0.60 of the corresponding maximum wall thickness. The ratio of the minimum wall thickness of the sheath shall be at least 0.60 of the corresponding maximum wall thickness. The sheath requirement shall not apply to two-conductor cable (see 4.7.2 and 4.7.3).

3.4.5.1 Wall thickness. The maximum wall thickness of an insulated conductor shall be the maximum distance between the inner surface of the insulation and the outer surface of same when measured along a line through the center of the circle defined by the outer surface of the insulation. The minimum wall thickness of the insulation shall be a similar distance measured along the same line, on the opposite side of the conductor.

3.5 Performance.

3.5.1 Insulation flaws. Insulated conductors shall be furnished free of insulation flaws. Cable flaws which are revealed after exposure to the voltage specified in table II shall be removed (see 4.7.4.1.1).

TABLE II. Voltages for detecting insulation flaws.

Conductor size	Voltage (V rms) 1/
20 to 12 inclusive	2,000
10 to 8 inclusive	2,000
6 to 0000 inclusive	3,000

1/ The frequency shall be 60 hertz (Hz).

3.5.2 Finished cable flaws. Finished cables shall be furnished free of flaws. Cable flaws which are revealed after exposure to the voltage specified in table III shall be removed (see 4.7.4.1.2).

TABLE III. Voltages for detecting finished cable flaws.

Conductor size	Voltage (V rms) 1/
Class A cable	
20 to 12 inclusive	2,000
10 to 8 inclusive	2,000
6 to 0000 inclusive	3,000
Class B cable	
All sizes	1,000

1/ The frequency shall be 60 Hz.

3.5.3 High voltage to ground. When tested as specified in 4.7.4.2, test specimens (see 6.4.9) shall withstand the applicable voltage specified in table IV without breakdown.

TABLE IV. High voltage to ground voltages.

Conductor size	Voltage (V rms)
Class A cable	
20 to 18 inclusive	4,000
16	5,000
14 to 12 inclusive	8,000
10 to 0000 inclusive	10,000
Class B cable	
All sizes	6,000

3.5.4 High voltage between insulated conductors (class B only). When tested as specified in 4.7.4.3, test specimens shall withstand 6,000 volts (V) root mean square (rms) without breakdown.

3.5.5 Fungus resistance. The cable shall be fungus resistant. After being exposed to fungus in accordance with MIL-F-13927, the cable shall meet the requirements of 3.5.3 and show no evidence of fungal growth (see 4.7.4.4).

3.5.6 High temperature resistance. After testing as specified in 4.7.4.5, the cable shall not be pitted or corroded.

3.5.7 Low temperature resistance (cold bend). When subjected to the low temperature test specified in 4.7.4.6, the cable shall show no evidence of cracking, breaking, separation, or other damage.

3.5.8 Oil absorption. Cable components shall show no evidence of cracking, rupture, or other damage after immersion in oil (see 4.7.4.7.2) at 158 degrees Fahrenheit (°F) for 20 hours. For sizes 16 to 20 inclusive, the outer diameter of the cable shall not swell more than 25% in excess of the original cable diameter. Other size cables shall not swell to more than 20% in excess of the original cable diameters (see 4.7.4.7).

3.5.9 Liquid immersion. The cable components shall evidence no cracking, rupture, or other damage after 20 hours of immersion in distilled water, a 5% (by weight) salt water solution, or ethylene glycol conforming to O-A-548 (see 4.7.4.8).

3.5.10 Flammability. When the cable is subjected to the test specified in 4.7.4.9, the flame shall travel at a rate not exceeding 1 inch per minute. The cable surface shall not flame for more than 1 minute after the gas flame is withdrawn. Burning particles shall not fall from the cable.

3.5.11 Ozone resistance. The cable shall evidence no cracking, rupture, or other deterioration when examined under 7-power magnification and shall meet the requirements specified in 3.5.3, after 300 hours of exposure to an ozone atmosphere in which the concentration of ozone is 50 ± 5 parts of ozone per 100 million parts of air by volume and the temperature is 100 ± 5°F (see 4.7.4.10).

3.5.12 Longitudinal shifting (class B only). When the cable is tested as specified in 4.7.4.11, the longitudinal shifting of the insulated conductor shall be not greater than 1/8 inch.

3.6 Color (see 4.7.2).

3.6.1 Insulation.

3.6.1.1 Class A. Color-marking of single-conductor cable is not required.

3.6.1.2 Class B. The color of the insulation or cloth braiding of the insulated conductors of multiconductor cable shall be in accordance with the applicable specification sheet or drawing or as specified by the procuring activity (see 6.2). Color coding shall be recognizable.

3.6.2 Sheath. Color of the sheath shall be black.

3.7 Finish. The cable shall have an even, smooth finish on the exterior surface. When the cable is wound on reels or coils or is piled, adjacent layers of the cable shall not adhere to each other (see 4.7.2).

3.8 Marking. The manufacturer's name or trade mark, date of manufacture, military PIN, size, number of conductors, and the letters "OZ" shall be clearly and legibly marked on the sheath at intervals of not more than 2 feet. If the cable is class B, the number of conductors of each size shall also be marked on the sheath in the same manner. The military PIN shall be as shown on the applicable specification sheet. The date of manufacture shall be indicated by two numbers separated by a dash. The first number shall indicate the quarter of the year in which the cable was manufactured and the second number shall indicate the year of manufacture (see 4.7.2).

3.9 Age. As determined by the date of manufacture (see 3.8), the cable shall be not more than 9 months old at the time when it is submitted to the Government for acceptance. This requirement shall apply only to direct procurement of bulk cable by the Government (see 4.7.2).

3.10 Workmanship. Cable shall show no evidence of cracking, breaking, rupture, or illegible marking (see 4.7.2).

4. QUALITY ASSURANCE PROVISIONS

4.1 Responsibility for inspection. Unless otherwise specified in the contract or purchase order, the contractor is responsible for the performance of all inspection requirements (examinations and tests) as specified herein. Except as otherwise specified in the contract or purchase order, the contractor may use his own or any other facilities suitable for the performance of the inspection requirements specified herein, unless disapproved by the Government. The Government reserves the right to perform any of the inspections set forth in this specification where such inspections are deemed necessary to ensure supplies and services conform to prescribed requirements (see 6.2).

4.1.1 Responsibility for compliance. All items must meet all requirements of sections 3 and 5. The inspection set forth in this specification shall become a part of the contractor's overall inspection system or quality program. The absence of any inspection requirements in the specification shall not relieve the contractor of the responsibility of ensuring that all products or supplies submitted to the Government for acceptance comply with all requirements of the contract. Sampling inspection, as part of manufacturing operations, is an acceptable practice to ascertain conformance to requirements, however, this does not authorize submission of known defective material, either indicated or actual, nor does it commit the Government to accept defective material.

4.2 Classification of inspections. The inspection requirements specified herein are classified as follows:

a. Qualification inspection (see 4.4).
b. Quality conformance inspections (QCI) (see 4.5).
   1. Examination (see 4.5.1).
   2. Acceptance tests (see 4.5.2).
c. Control tests (see 4.6).
d. Inspection of packaging (see 4.8).

4.3 Inspection conditions. Unless otherwise specified herein or in the contract or purchase order (see 6.2), all inspections shall be conducted under the following conditions:

a. Air temperature: 77 ± 18°F.
b. Barometric pressure: Site pressure.
c. Relative humidity: Uncontrolled room ambient.

4.4 Qualification inspection. Qualification inspection shall be conducted by the Government at a place designated by the Government and shall consist of the inspections specified in table V. Cable, submitted in accordance with 4.4.1, shall be cut into a 4-foot length of cable and into the specimen lengths specified in table VI. The 4-foot length of cable shall be examined for the defects specified in table VII. The other specimens shall be subjected to the corresponding group of tests specified in table VI in the order listed therein (see 6.3).

4.4.1 Qualification samples. A sample (see 6.4.5) of cable no less than 75 feet in length, of each type and class, of the applicable military PIN (see 6.3.1) shall be furnished for testing. Cable shall be representative of the product proposed to be furnished under the contract.

TABLE V. Classification of inspections. 1/

Title	Requirement	Inspection	Qualification 2/	QCI		Control
				Examination	Acceptance tests	
Materials and construction	3.3 thru 3.3.4, 3.3.6, 3.3.7, 3.4, 3.4.4, & 3.4.4.3	4.7.1	X			
Defects (see table VII)	3.3.5, 3.4 thru 3.4.3, 3.4.4.1 3.4.4.2, 3.4.5, & 3.6 thru 3.10	4.7.2	X	X		
Concentricity	3.4.5	4.7.3	X	X		
Insulation flaws	3.5.1	4.7.4.1.1			X	
Finished cable flaws	3.5.2	4.7.4.1.2			X	
High voltage to ground	3.5.3	4.7.4.2	X			X
High voltage between insulated conductors (class B only)	3.5.4	4.7.4.3	X			
Fungus resistance	3.5.5	4.7.4.4	X			
High temperature resistance	3.5.6	4.7.4.5	X			X
Low temperature resistance (cold bend)	3.5.7	4.7.4.6	X			X
Oil absorption	3.5.8	4.7.4.7	X			
Liquid immersion	3.5.9	4.7.4.8	X			X
Flammability	3.5.10	4.7.4.9	X			
Ozone resistance	3.5.11	4.7.4.10	X			X 3/
Longitudinal shifting (class B only)	3.5.12	4.7.4.11	X			

1/ See 4.8 for inspection of packaging.
2/ Also see table VI.
3/ This test may be conducted at a reduced level than that used in qualification testing.

TABLE VI. Qualification test schedule.

Number of specimens	Length	Inspection	Title
1	3 feet	4.7.4.6 4.7.4.2	Low temperature resistance (cold bend) High voltage to ground
1	3 feet	4.7.4.7 4.7.4.6 4.7.4.2	Oil absorption Low temperature resistance (cold bend) High voltage to ground
1	2 feet	4.7.4.8 4.7.4.6 4.7.4.2	Liquid immersion (salt water) Low temperature resistance (cold bend) High voltage to ground
1	2 feet	4.7.4.8 4.7.4.6 4.7.4.2	Liquid immersion (distilled water) Low temperature resistance (cold bend) High voltage to ground
1	2 feet	4.7.4.8 4.7.4.6 4.7.4.2	Liquid immersion (ethylene glycol) Low temperature resistance (cold bend) High voltage to ground
1	3 feet	4.7.4.5 4.7.4.2	High temperature resistance High voltage to ground
1	2 feet	4.7.4.2 4.7.4.3	High voltage to ground High voltage between insulated conductors (class B only)
1	20 inches	4.7.4.9	Flammability
5	3 feet	4.7.4.4 4.7.4.2	Fungus resistance High voltage to ground
1	3 feet	4.7.4.10 4.7.4.6 4.7.4.2	Ozone resistance Low temperature resistance (cold bend) High voltage to ground
1	1 foot	4.7.4.11	Longitudinal shifting (class B cable only)

TABLE VII. Classification of defects.

Category	Defect	Method of examination
Critical	None defined.	
Major		
101	Improper shielding material (type II only) (see 3.3.5).	Visual and SIE 1/
102	Cable diameter or length outside of tolerance (see 3.4).	SIE
103	Insulation diameter outside of tolerance (see 3.4).	SIE
104	Conductor cross section or stranding, not as specified (see 3.4.1, 3.4.1.1 and 3.4.1.2).	Visual, removing insulation as necessary, counting strands if practical, measuring several strand diameters
105	Joints, not as specified (see 3.4.1.3).	Visual
106	Strippability, not as specified (see 3.4.2).	Visual
107	Insulation and fit, not as specified (see 3.4.3).	Visual
108	Concentricity of sheath, not as specified (see 3.4.5).	See 4.7.3
109	Concentricity of insulation, not as specified (see 3.4.5).	See 4.7.3
110	Finish or color of sheath, not as specified (see 3.6.2 and 3.7).	Visual, pushing shielding back as necessary
111	Exceeding age limit (see 3.9).	Same as above
Minor		
201	Excessive breaks in shielding strands (type II only) (see 3.4.4.1).	Visual
202	Insufficient coverage of shielding (type II only) (see 3.4.4.2).	Measuring pitch, and cable diameter, computation
203	Color of insulation, not as specified (class B only) (see 3.6.1.2).	Visual
204	Improper marking on sheath (see 3.8).	Visual, pushing shielding back as necessary
205	Workmanship, not as specified (see 3.10).	Visual, pushing shielding back as necessary

1/ SIE = Standard Inspection Equipment.

4.4.2 Qualification failure. Failure of any qualification specimen to pass the examination or any test indicated in 4.4 may be cause for the Government to refuse to conduct additional tests until the faults revealed by the inspection have been corrected.

4.4.3 Retention of qualification. To retain qualification, the contractor shall report at 2-year intervals to the qualifying activity. The qualifying activity will establish the initial reporting date. The report shall consist of:

a. A summary of the results of the tests performed for inspection of product for delivery, indicating as a minimum the number of lots that have passed, the number that have failed, and the groups which have failed. The results of tests of all reworked lots shall be identified and accounted for.

b. A summary of the results of tests performed for periodic inspection, including the number and mode of failures. The summary shall include results of all periodic inspection tests performed and completed during the 2-year period. If the summary of the tests results indicates nonconformance with specification requirements, and corrective action acceptable to the qualifying activity has not been taken, action may be taken to remove the failing product from the QPL.

Failure to submit the report within 30 days after the end of each 2-year period may result in loss of qualification for the product. In addition to the periodic submission of inspection data, the contractor shall immediately notify the qualifying activity at any time during the 2-year period that the inspection data indicates failure of the qualified product to meet the requirements of this specification.

In the event that no production occurred during the reporting period, a report shall be submitted certifying that the company still has the capabilities and facilities necessary to produce the item. If during two consecutive reporting periods there has been no production, the manufacturer may be required, at the discretion of the qualifying activity, to submit his qualified products to retesting in accordance with the qualification inspection requirements and the reason for no production.

4.5 QCI.

4.5.1 Sampling.

4.5.1.1 Lot formation. Unless otherwise specified (see 6.2), a lot shall consist of the minimum of the following two quantities: All units of product (see 4.5.1.1.1) of the same military PIN produced by one manufacturer during 1 month; 300 units of product of the same military PIN.

4.5.1.1.1 Units of product. Unless otherwise specified (see 6.2), a unit of product shall be defined as one entire length of finished cable.

4.5.1.2 Sampling for examination. Samples for quality conformance examination shall be selected in accordance with general inspection level II of MIL-STD-105. A 4-foot length shall be cut from the end of each sample in order to conduct the examination specified in 4.5.2.2.

4.5.2 Examination.

4.5.2.1 Acceptable quality level (AQL). The 4-foot lengths selected in accordance with 4.5.1.2 shall be examined to determine conformance to the following AQL's on the basis of percent defective:

Classification	AQL
Major	1.0
Minor	2.5

4.5.2.2 Classification of defects. For examination purposes, defects shall be classified as specified in table VII.

4.5.2.2.1 Type II. Cables with internal shielding, shall be examined for defects 101, 201, and 202 as follows: Examination for all other defects shall be performed, the sheath shall be removed from the cable, and inspection of shielding shall be performed in accordance with table VII. Examination for defects 103, 104, and 203 shall be accomplished by cutting the sheath, tape, and filling compound away as necessary and inspecting as indicated in table VII.

4.5.3 Acceptance tests. All cable submitted for acceptance shall be subjected to the QCI acceptance tests specified in table V.

4.5.3.1 Certification. The supplier shall make available for review to the Government certification that all insulation used in the construction of cables and all finished cables have been subjected to the QCI acceptance tests specified in table V, and that the defective sections have been removed as specified therein.

4.6 Control tests.

4.6.1 Sampling. Unless otherwise specified (see 6.2), a sample of cable of length sufficient to perform the tests indicated in 4.6.2 shall be selected after the first 500 feet of cable of a given military PIN has been produced. Thereafter, two samples of the length specified above shall be selected every month throughout the duration of the contract, except that a length shall not be selected for control testing until 50,000 feet of cable, having the same military PIN has been produced since the last control sample length was taken.

4.6.2 Tests. Each sample selected in accordance with 4.6.1 shall be identified as to production period and shall be cut into three 2-foot specimens and two 3-foot specimens. Each 2-foot specimen shall be subjected to a different test specified in 4.7.4.8 and subsequently to the tests

specified in 4.7.4.6 and 4.7.4.2 in that order. One 3-foot specimen shall be subjected to the tests specified in 4.7.4.5 and 4.7.4.2 in that order. The other 3-foot specimen shall be subjected to the test specified in 4.7.4.10 and subsequently to the test specified in 4.7.4.2.

4.6.3 Failure. Failure of any control test sample to pass any of the specified control tests shall be cause for the Government to refuse acceptance of the production quantity represented, until action taken by the contractor to correct defects and prevent recurrence has been approved by the Government.

4.7 Methods of inspection.

4.7.1 Materials and construction. Conformance to 3.3 through 3.3.4, 3.3.6, 3.3.7, 3.4, 3.4.4, and 3.4.4.3 shall be determined by inspection of contractor records providing proof or certification that design, construction, processing, and materials conform to requirements. Applicable records shall include drawings, specifications, design data, receiving inspection records, processing and quality control standards, vendor catalogs and certifications, industry standards, test reports, and rating data.

4.7.2 Defects. Conformance to 3.3.5, 3.4 through 3.4.3, 3.4.4.1, 3.4.4.2, 3.4.5, and 3.6 through 3.10 shall be determined by examination for the defects listed in table VII. Examination shall be visual, tactile, or by measurement with standard inspection equipment.

4.7.3 Concentricity. To determine conformance to 3.4.5, the maximum and minimum wall thickness (see 3.4.5.1) of each insulator and the sheath shall be measured at one end of the test sample. Suitable magnification shall be used if necessary. The ratio of each minimum wall thickness to the corresponding maximum wall thickness shall also be computed. (If the cable has two conductors, the sheath measurements shall be omitted.)

4.7.4 Performance.

4.7.4.1 In-process.

4.7.4.1.1 Insulation flaws. To determine conformance to 3.5.1, each length of insulated conductor shall be passed through the suspended chains of the test electrode (see 4.7.4.1.1.1) prior to being assembled into a finished cable. An alternating voltage, as specified in table II, shall be applied between the conductor and the test electrode (chains) so that each point on the insulated conductor surface shall be within a fraction of an inch of at least one chain for not less than 0.15 second. A length of insulated conductor completely surrounding each insulation flaw revealed by this procedure shall be removed.

4.7.4.1.1.1 Electrode. The test electrode shall be an arcing electrode especially designed for detecting insulation flaws in finished cable and cable components (see 4.7.4.1.1 and 4.7.4.1.2). It shall contain closely spaced bead chain or fine link mesh, suspended from one end. The chains

shall be electrically connected and cover an area of sufficient dimensions so that all of the surface of the cable or insulated conductor is within a fraction of an inch of at least one chain for the length of time specified in the respective test.

4.7.4.1.2 Finished cable flaws. To determine conformance to 3.5.2, all finished cable shall be tested as specified herein. The cable conductors shall be connected electrically. The cable shall be passed through the suspended chains of the test electrode (see 4.7.4.1.1.1) in the same manner specified for the insulated conductor in 4.7.4.1.1. Each point on the sheath surface shall be within a fraction of an inch of at least one chain for at least 0.15 second. While the cable is passing through the electrode (chains), an alternating voltage, as specified in table III, shall be applied between the (uninsulated) conductors and the test electrode. A length of finished cable completely surrounding each finished cable flaw shall be removed.

4.7.4.2 High voltage to ground. To determine conformance to 3.5.3, the separator, insulation, braid, tape or wrap, sheath, and shielding shall be removed from each end of the test specimen leaving the conductor ends bare for a length of 1 to 2 inches. The specimen shall be formed into a loop with the ends of the conductors twisted together. If class B cable is being tested, the individual conductors shall be electrically connected. The loop shall be immersed in salt water containing 5% sodium chloride, by weight. No less than 3 inches nor more than 6 inches of each end of each specimen shall protrude above the surface of the salt water. Except as specified in 4.7.4.8.1 for the liquid immersion test (salt water specimens), the specimen shall be conditioned in the salt water for 5 hours. An alternating voltage, with a frequency of 60 Hz shall be applied between the (uninsulated) conductor(s) and the water for not less than 1 minute. The voltage shall be as specified in table IV. Cables which have two or more conductors of different sizes falling under different test voltages in table IV shall be tested at the higher voltage. The specimen shall be observed for physical signs of breakdown.

4.7.4.3 High voltage between insulated conductors (class B only). To determine conformance to 3.5.4, any external shielding shall be removed. The sheath, tape or wrap, and filling compound shall be removed from both ends of the specimen for a length sufficient to perform the test. Any internal shielding or cloth braid which become exposed shall be removed also. A length of insulation and separator sufficient to make electrical contact shall be stripped from all the loose, insulated conductors on one end. Suitable electrical connectors may be attached for convenience. All of the insulated conductors except one shall be grounded. The sheath and the remaining internal shielding shall be insulated from ground. The ungrounded, insulated conductor shall be physically separated from the other insulated conductors to prevent arcing through the air. An alternating voltage of 6,000 V rms with a frequency of 60 Hz shall be applied to the ungrounded conductor for 1 minute. The same process shall be repeated with each conductor ungrounded. The specimen shall be observed for physical signs of breakdown.

4.7.4.4 Fungus resistance. To determine conformance to 3.5.5, the specimens shall be subjected to fungus as specified in MIL-F-13927. During qualification testing, one specimen shall be removed from incubation after 30 days and subjected to the test specified in 4.7.4.2. One specimen shall be removed from incubation after 60 days and subjected to the same test. The remaining specimens shall be removed from incubation after 90 days and subjected to the same test.

4.7.4.5 High temperature resistance. To determine conformance to 3.5.6, the insulated conductor(s) shall be stripped for a distance of 1 inch at each end of the specimen. The test specimen shall be suspended around a mandrel having a diameter of not more than 5 times the nominal cable diameter. A weight of not less than 5 pounds for each 1/4 inch of cable diameter shall be attached to each end of the sample. The specimen, on the mandrel with the weights freely suspended, shall be placed in a circulating air oven maintained at a temperature of 250 ± 2°F for a period of 120 hours. At the conclusion of the 120-hour period, the specimen shall be removed from the oven and allowed to cool to room temperature. When cool, the weights shall be removed from the specimen and the specimen shall be removed from the mandrel. The bent portion of the specimen shall then be bent again not less than 180 degrees (°) around the mandrel in the opposite direction with the opposite side of the cable in contact with the mandrel, at a uniform rate such that the complete 180° bend is accomplished in 10 seconds. After being subjected to the remaining qualification or control tests specified for the specimen, the specimen shall be inspected for evidence of breakdown of the insulation and sheath. The insulated conductor(s) shall then be stripped and inspected for evidence of pitting or corrosion.

4.7.4.6 Low temperature resistance (cold bend). To determine conformance to 3.5.7, the specimen shall be laid out straight in a suitable low temperature chamber and shall be subjected to an ambient temperature of minus 65 ± 3°F for 96 hours. At the conclusion of the refrigeration period and while at minus 65 ± 3°F, the specimen shall be bent 180° around a mandrel having a diameter of not more than 10 times the nominal outside diameter of the specimen, at the uniform rate of one 180° bend in 10 seconds. The specimen shall be observed for the defects specified in 3.5.7.

4.7.4.7 Oil absorption. To determine conformance to 3.5.8, the specimen shall be tested as specified herein using the test apparatus specified in 4.7.4.7.1 and the test liquid specified in 4.7.4.7.2. The specimen shall be suspended for 20 hours in the test liquid with not less than 1-1/2 inches, nor more than 2 inches of each specimen end protruding above the surface of the liquid. The test liquid temperature shall be maintained at not less than 158°F nor more than 165°F during the test. Before immersion, the diameter of the cable shall be measured at five or more approximately equally-spaced locations along the length. This shall include measurements in two perpendicular directions. At the conclusion of the immersion period, the specimen shall be removed from the test liquid, allowed to cool to room temperature, and then be wiped dry with a clean, soft, absorbent, dry cloth. The test specimen shall then be remeasured at the same locations at which the pre-immersion measurements were taken and the percent increase in diameter computed.

4.7.4.7.1 Apparatus. The test apparatus shall include a bath of adequate dimensions to hold the test specimen, with means for maintaining the test liquid at the specified temperature throughout the test.

4.7.4.7.2 Test liquid. The test liquid shall be a petroleum base oil (see 6.8) with the following properties as determined by the methods indicated below and specified in VV-L-791:

a. Viscosity, Saybolt Universal (method 304) 155 ± 5 seconds (measured at 100°F).
b. Aniline point, (method 3602) 157.1 ± 1.8°F.
c. Flash point, (method 1103) 330 ± 5°F.

4.7.4.8 Liquid immersion. To determine conformance to 3.5.9, each of three specimens shall be tested using a different one of the liquids specified in 3.5.9. The test apparatus shall be as specified in 4.7.4.7.1. Items such as the sheath, filling compound, tape, or wrap shall be removed from a distance of 1-1/2 inches from each end of the specimen to expose the insulated conductors. The specimen shall be immersed for 20 hours in the liquid with no less than 1-1/2 inches and no more than 2 inches of each end protruding above the surface of the liquid. At the end of the 20-hour period, the specimen shall be removed from the liquid and its surface wiped dry with a clean, soft, absorbent, dry cloth. The specimen shall be examined for evidence of damage.

4.7.4.8.1 Subsequent testing. When the specimen which has been immersed in salt water in accordance with 4.7.4.8 is subsequently subjected to the test specified in 4.7.4.2, the 5-hour immersion specified therein may be omitted.

4.7.4.9 Flammability. To determine conformance to 3.5.10, the specimen shall be tested as specified herein using the test apparatus specified in 4.7.4.9.1. The specimen shall be suspended taut in a horizontal position as shown in figure 1, within a partial enclosure which allows a flow of air sufficient for complete combustion but which is free from drafts. (If the specimen is type II cable with external shielding, this shielding shall be removed.) A test area shall be marked in the center of the suspended cable as shown in figure 1. The gas flame specified in figure 1 shall be applied, as shown, to the test area so that the flame is the same distance from either edge of the test area. The flame shall be applied for 30 seconds if the cable specimen has a nominal diameter equal to or less than 1/2 inch, and 45 seconds if the cable has a larger nominal diameter. The cable shall be observed for evidence of burning particles falling from the cable. The time required for the flame to reach one of the edges of the test area shall be measured. The rate of travel in inches per minute shall be computed. The time required for the cable to cease flaming after the gas flame has been withdrawn shall be measured.

4.7.4.9.1 Apparatus. The test apparatus shall include a Bunsen burner equipped with a wing-top flame spreader having an opening not less than 1/16 inch wide and 2 inches long.

4.7.4.10 Ozone resistance. To determine conformance to 3.5.11, the specimens shall be tested as specified herein using the test apparatus specified in 4.7.4.10.1. The specimens shall be wrapped once around the appropriate mandrel (see 4.7.4.10.1), and the two ends of the cable shall be bound together with twine or tape at the point where they intersect. After being placed on the mandrel, the specimens shall be conditioned at ambient room temperature for 45 minutes. The specimens shall then be placed in the test exposure chamber for 300 hours for the qualification test and for 168 hours for the control test. The tests shall be conducted at a temperature of 100 ± 5°F. Immediately after the completion of the test period, each sample shall be examined for evidence of cracking using 7-power magnification. The bound and taped portion of the cable and the area adjacent thereto shall not be examined. Immediately after the examination, each sample shall be subjected to the high voltage to ground test specified in 4.7.4.2 to determine conformance to 3.5.3.

4.7.4.10.1 Apparatus. The test apparatus shall include an exposure chamber containing air mixed with ozone in the proportion of 50 ± 5 parts per 100 million parts of atmospheric air by volume, and mandrels of the size appropriate for the test specimen as specified below:

Cable outside diameter (OD)	Mandrel diameter
Less than 1/2 inch	4 times the cable OD
At least 1/2 inch but less than 3/4 inch	5 times the cable OD
At least 3/4 inch but less than 1-1/4 inch	6 times the cable OD
At least 1-1/4 inch but less than 1-3/4 inch	8 times the cable OD
At least 1-3/4 inch and above	10 times the cable OD

4.7.4.11 Longitudinal shifting (class B only). To determine conformance to 3.5.12, the specimen shall be cut as shown in figure 2. The sheath, tape, and filling compound shall be removed from one end of the cable as indicated. The rectangular opening shall be cut no longer than necessary to sever one or two insulated conductors. The end indicated in figure 2 shall be securely clamped in a fixture with the sample suspended vertically. A mark shall then be placed on the lower end of an insulated conductor which has been severed through the rectangular opening. The mark shall be at the point where the loose insulated conductor meets the sheath. A 20-pound weight shall be attached to the conductor and suspended freely for 5 minutes. The distance of the mark from the sheath shall then be measured to determine longitudinal shifting of the insulated conductor.

4.8 Inspection of packaging. In addition to the quality assurance provisions in referenced MIL-C-12000 (see 5.1), the provisions of 4.8.1 shall apply.

4.8.1 Government inspection. The Government may, at unscheduled intervals, inspect all materials and processes involved in the preparation for delivery to determine conformance to the requirements in Section 5 and specifications referenced therein. Any evidence of deviation from specified requirements shall be cause for refusal of the Government inspector to accept subsequent lots until objective evidence has been provided by the contractor that corrective action has been taken.

5. PACKAGING

5.1 Preservation, packaging, packing, and marking. Unless otherwise specified (see 6.2), cable shall be cleaned, dried, preserved, packaged, packed, and marked in accordance with MIL-C-12000. The degree of preservation shall be level A or C and the degree of packing shall be level A, B, or C as specified (see 6.2).

6. NOTES

(This section contains information of a general or explanatory nature that may be helpful, but is not mandatory.)

6.1 Intended use. Cable procured by this specification is primarily intended for tank-automotive applications where it may be subjected to severe environmental conditions.

6.1.1 Type I. This cable is normally used in applications not requiring radio interference suppression or where such suppression is accomplished by methods other than shielding of cables.

6.1.2 Type II. This cable is normally used where shielding of cables for radio interference suppression is required.

6.1.3 Class B. This cable should be used only in connector to connector situations involving the entire cable assembly. It should not be used in situations involving removing of the sheath and exposure of the insulated conductor to ambient environment.

6.2 Acquisition requirements. Acquisition documents must specify the following:

a. Title, number, and date of the specification.
b. Type and class of cable (see 1.2).
c. Applicable specification sheet or drawing (see 1.2.1, 3.2, and 3.4).
d. Issue of DODISS to be cited in the solicitation, and if required, the specific issue of individual documents referenced (see 2.1.1).
e. Applicable PIN and length of cable (see 3.4).
f. Any special color coding for class B cable insulation (see 3.6.1.2).
g. Responsibility for inspection and place of inspection, if other than as specified (see 4.1).
h. Inspection conditions, if other than as specified (see 4.3).
i. Lot formation, if other than as specified (see 4.5.1.1).
j. If a unit of product is other than as specified (see 4.5.1.1.1).
k. Sampling for control testing, if other than as specified (see 4.6.1).
l. Selection of applicable level and packaging requirements, if different from MIL-C-12000 (see 5.1).

6.3 Qualification. With respect to products requiring qualification, awards will be made only for products which are, at the time of award of contract, qualified for inclusion in QPL No. 13486 whether or not such products have actually been so listed by that date. The attention of the contractors is called to these requirements, and manufacturers are urged to arrange to have the products that they propose to offer to the Federal Government tested for qualification in order that they may be eligible to be awarded contracts or purchase orders for the products covered by this specification. The activity responsible for the QPL is the US Army Tank-Automotive Command, ATTN: AMSTA-GDS, Warren, MI 48397-5000, and information pertaining to qualification of products may be obtained from that activity.

6.3.1 Special provision for establishing qualification. Qualification of cable of a given type and part number will be recognized as establishing qualification for other cable of similar construction by the same manufacturer at the discretion of the qualifying activity in accordance with table VIII. The groups specified in table VIII have no bearing on the classification specified in 1.2.

TABLE VIII. Extension of qualification.

Group	PIN	Former part number (reference)	Qualification of any item in the grouping covers all items in the grouping, see below:
1	M13486/1-3	7722204	All of group 1
1	M13486/1-4	8690176	
1	M13486/1-5	7720853	
1	M13486/1-6	7056679	
2	M13486/1-7	7056678	All of group 2
2	M13486/1-9	7056677	
2	M13486/1-10	7056676	
3	M13486/1-11	8690175	All of group 3
3	M13486/1-12	7056675	
3	M13486/1-14	7056674	
3	M13486/1-15	None	
3	M13486/1-17	7056674-1	
4	M13486/3-1	7056674-2	All of group 4
4	M13486/4-1	7728530	
5	M13486/5-1	7732849	All of group 5
5	M13486/6-1	7056680	
5	M13486/7-1	7056681	
5	M13486/8-1	7056682	
5	M13486/9-1	7056683	
5	M13486/10-1	7056684	
5	M13486/11-1	7056685	
5	M13486/14-1	None	

TABLE VIII. Extension of qualification - Continued.

Group	PIN	Former part number (reference)	Qualification of any item in the grouping covers all items in the grouping, see below:
6	M13486/12-1	7056686	All of groups 5 and 6
7	M13486/13-1	7724579	All of group 7
8 8	M13486/2-1 M13486/2-2	8345775 8345776	All of group 8
9	M13486/1-1	None	All of group 9
10	M13486/1-2	None	All of group 10
11	M13486/1-8	None	All of group 11

6.4 Definitions. Throughout this specification the following terms have been used as defined below:

6.4.1 Braid (shielding) - An interwoven tubular metallic construction defined in terms of ends and carriers.

a. Strand - The basic single individual copper wire elements utilized in the braid.
b. Carrier - The group of strands acting together in forming the braid.
c. Description - The braid is normally described in terms of the diameter of the end; the number of strands per carrier, and the number of carriers utilized in forming the braid.
d. Number of carriers - The number of groups of strands required to completely enclose the cable circumference.

6.4.2 Conductor - A collection of individual strands which is to be insulated from other conductors in the assembled cable.

6.4.3 Insulated conductor - A conductor with a separator which has been covered with insulating compound.

6.4.4 Recovered materials. "Recovered materials" means materials that have been collected or recovered from solid waste (see 6.4.8).

6.4.5 Sample - A length of cable selected as specified herein, to be cut into shorter lengths to perform the inspection specified herein.

6.4.6 Sheath - The outer covering or jacket of the finished cable.

6.4.7 Shield - A tubular braid made of copper strands used to provide reinforcement and interference suppression both for single cables (see MIL-C-13486/2) and for multiple conductor assemblies (see MIL-C-13486/13).

6.4.8 Solid waste. "Solid waste" means (a) any garbage, refuse, or sludge from a waste treatment plant, water supply treatment plant, or air pollution control facility; and (b) other discarded material, including solid, liquid, semisolid, or contained gaseous material resulting from industrial, commercial, mining, and agricultural operations, and from community activities. It does not include solid or dissolved material in domestic sewage, or solid or dissolved material in irrigation return flows or industrial discharges which are point sources subject to permits under section 402 of the Clean Water Act, (33 U.S.C. 1342 et seq.), or source, special nuclear, or byproduct material as defined by the Atomic Energy Act of 1954 (42 U.S.C. 2011 et seq.) (Source: Federal Acquisition Regulations, section 23.402).

6.4.9 Specimen - A length of insulated conductor, or cable, which is to be subjected to examination as specified herein or to one of the tests specified herein. A specimen may consist of a long length of insulated conductor or finished cable. A specimen may also be a short length of cable cut from a sample.

6.4.10 Strand - A small diameter solid coated wire.

6.4.11 Tape - A helically wound strip in one or both directions.

6.5 Cross-reference. - In this revision, the part numbers from revision B were simply changed to PIN's because the interchangeability characteristics were not affected by this revision. In addition, a cross-reference of older (that is, prior to revision B) part numbers (referred to herein as "former part numbers") to current PIN's is provided in the individual specification sheet when applicable.

6.6 Part or Identifying Number (PIN). The PIN's to be used for cables acquired to this specification are created as follows:

M	13486/X-	X
Prefix to indicate military specification	Specification sheet number	See applicable specification sheet

6.7 Subject term (key word) listing.

Black
Flame resistant
Flexible
Fungus resistant
High temperature resistant
Low temperature resistant
Low tension, DC
Low swell
Multiconductor
Neoprene
Oil resistant

Ozone resistant
Polychloroprene
Recycled materials
Scuff resistant
Separator
Sheathed electrical cable
Shielded
Single conductor
Unshielded
Waterproof

6.8 Test liquid. The test liquid used in the oil absorption test specified in 4.7.4.7 is the same as ASTM No. 3 petroleum base oil (see ASTM D471).

6.9 Changes from previous issue. Marginal notations are not used in this revision to identify changes with respect to the previous issue due to the extensiveness of the changes.

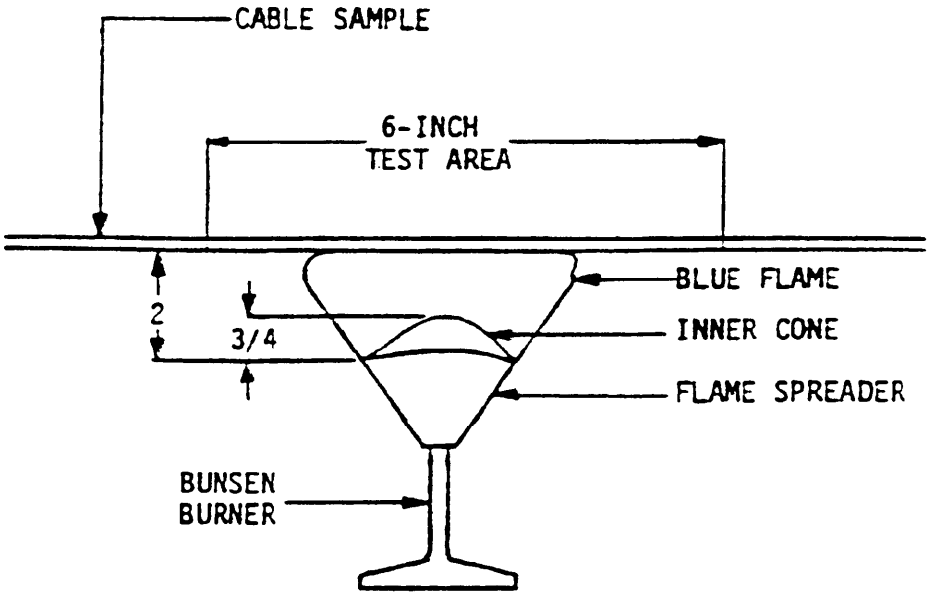

NOTE: All dimensions are in inches.

FIGURE 1. Laboratory setup for the flammability test.

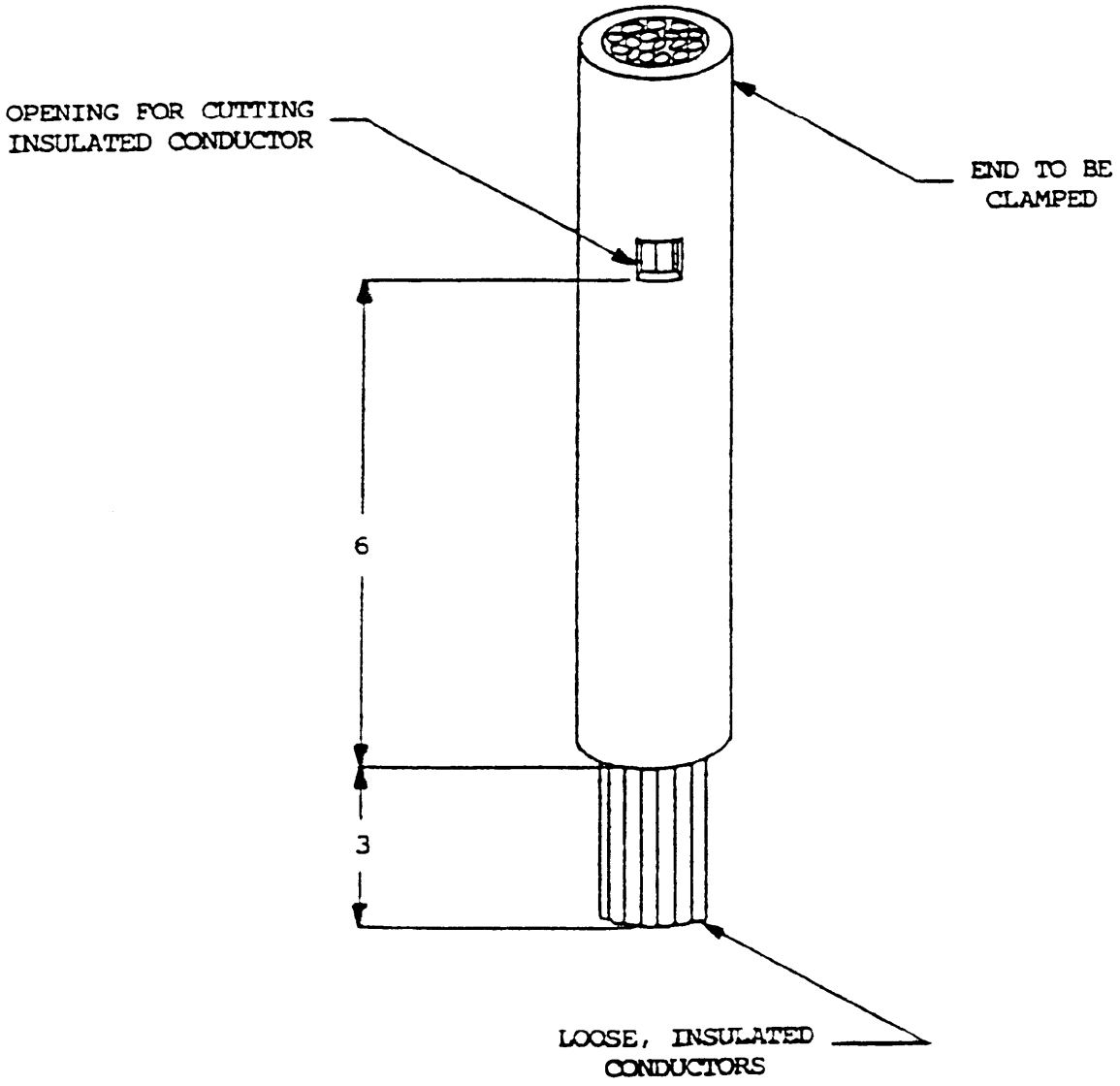

NOTE: All dimensions are in inches.

FIGURE 2. Preparation of sample for longitudinal shifting test.

Custodian:
Army - AT
Navy - SH
Air Force - 85

Review activities:
Army - EA
Air Force - 99
DLA - IS

User activities:
Army - ME
Air Force - 71, 79, 80, 84

Preparing activity:
Army - AT

(Project 6145-1075)

STANDARDIZATION DOCUMENT IMPROVEMENT PROPOSAL

INSTRUCTIONS

1. The preparing activity must complete blocks 1, 2, 3, and 8. In block 1, both the document number and revision letter should be given.
2. The submitter of this form must complete blocks 4, 5, 6, and 7.
3. The preparing activity must provide a reply within 30 days from receipt of the form.

NOTE: This form may not be used to request copies of documents, nor to request waivers, or clarification of requirements on current contracts. Comments submitted on this form do not constitute or imply authorization to waive any portion of the referenced document(s) or to amend contractual requirements.

I RECOMMEND A CHANGE:	1. DOCUMENT NUMBER MIL-C-13486C	2. DOCUMENT DATE (YYMMDD) 6 June 1989

3. DOCUMENT TITLE
Cables, Special Purpose, Electrical

4. NATURE OF CHANGE (Identify paragraph number and include proposed rewrite, if possible. Attach extra sheets as needed.)

5. REASON FOR RECOMMENDATION

6. SUBMITTER

a. NAME (Last, First, Middle Initial)	b. ORGANIZATION	
c. ADDRESS (Include Zip Code)	d. TELEPHONE (Include Area Code) (1) Commercial (2) AUTOVON (If applicable)	7. DATE SUBMITTED (YYMMDD)

8. PREPARING ACTIVITY

a. NAME	b. TELEPHONE (Include Area Code) (1) Commercial (313) 574-8774	(2) AUTOVON 786-8774
c. ADDRESS (Include Zip Code) COMMANDER U.S. ARMY TANK - AUTOMOTIVE COMMAND ATTN: AMSTA-GDS WARREN, MICHIGAN 48397-5000	IF YOU DO NOT RECEIVE A REPLY WITHIN 45 DAYS, CONTACT: Defense Quality and Standardization Office 5203 Leesburg Pike, Suite 1403, Falls Church, VA 22041-3466 Telephone (703) 756-2340 AUTOVON 289-2340	