Downloaded from http://www.everyspec.com

MIL-C-11264C
13 August 1982
SUPERSEDING
MIL-C-11264B
16 August 1963
MIL-C-10301A(AT)
3 April 1969

MILITARY SPECIFICATION

CONTAINERS: WOOD, SHIPPING, REUSABLE - FOR TANK AUTOMOTIVE ENGINES, TRANSMISSIONS, DIFFERENTIALS, TRANSFERS, FINAL DRIVES, DRIVING AXLES, AND SIMILAR ASSEMBLIES

This specification is approved for use by US Army Tank-Automotive Command, Department of the Army and is available for use by all Departments and Agencies of the Department of Defense.

1. SCOPE

1.1 Scope. This specification covers five types of reusable wood shipping containers with cover assembly for use in shipment and storage of engines, transmissions, differentials, transfers, final drives, driving axles, and similar assemblies.

1.2 Classification. Containers shall be of the following types as specified (see 6.2):

Type I	- For items weighing over 100 pounds but not over 200 pounds.
Type II	- For items weighing over 200 pounds but not over 1600 pounds.

Beneficial comments (recommendations, additions, deletions) and any pertinent data which may be of use in improving this document should be addressed to : US Army Tank-Automotive Command, ATTN: DRSTA-GSS, Warren, MI 48090, by using the self-addressed Standardization Document Improvement Proposal (DD Form 1426) appearing at the end of this document, or by letter.

FSC 8145

Downloaded from http://www.everyspec.com

Type III	- For driving axle assemblies weighing not over 1600 pounds.
Type IV	- For items weighing over 1000 pounds but not over 2500 pounds.
Type V	- For items weighing over 2500 pounds but not over 7000 pounds.

2. APPLICABLE DOCUMENTS

2.1 Government documents.

2.1.1 Specifications and standards. Unless otherwise specified (see 6.2), the following specifications and standards of the issue listed in that issue of the Department of Defense Index of Specifications and Standards (DoDISS) specified in the solicitation, form a part of this specification to the extent specified herein.

SPECIFICATIONS
FEDERAL

LP-390	- Plastic, Molding and Extrusion Material, Polyethylene and Copolymers (Low, Medium, and High Density).
FF-B-561	- Bolts, (screw), Lag.
FF-B-584	- Bolts, Finned Neck; Key Head; Machine: Ribbed Neck; Square Neck; Tee Head.
FF-N-105	- Nails, Brads, Staples and Spikes: Wire, Cut and Wrought.
FF-W-92	- Washer, Flat (Plain).
NN-P-530	- Plywood, Flat Panel.
SS-R-501	- Roofing Felt, Asphalt - Prepared Smooth surface.
TT-I-1795	- Ink, Marking, Stencil, Opaque (Porous and Non-porous Surfaces).
PPP-B-621	- Boxes, Wood, Nailed, and Lock-Corner.
PPP-B-1055	- Barrier Material, Waterproofed, Flexible.

MILITARY

MIL-C-104	- Crates, Wood; Lumber and Plywood Sheathed, Nailed and Bolted.
MIL-P-116	- Preservation, Methods of.
DOD-D-1000	- Drawings, Engineering and Associated Lists.
MIL-C-16173	- Corrosion Preventive Compound, Solvent Cutback, Cold-Application.
DOD-P-16232	- Phosphate Coatings Heavy, Manganese or Zinc Base (for Ferrous Metals).

Downloaded from http://www.everyspec.com

STANDARDS
FEDERAL

FED-STD-101	- Test Procedures for Packaging Materials.

MILITARY

MIL-STD-105	- Sampling Procedures and Tables for Inspection by Attributes.
MIL-STD-129	- Marking for Shipment and Storage.
MIL-STD-731	- Quality of Wood Members for Containers and Pallets.
MIL-STD-1261	- Welding Procedures for Constructional Steels.

(Copies of specifications and standards required by manufacturers with specific acquisition functions should be obtained from the contracting activity or as directed by the contracting officer.)

2.1.2 Order of precedence. In the event of a conflict between the text of this specification and the references cited herein, the text of this specification shall take precedence.

3. REQUIREMENTS

3.1 First article (preproduction). Unless otherwise specified (see 6.2, 6.4 and 6.4.1), a first article sample of containers to be furnished under this specification shall be produced after award of contract and before beginning production. Samples shall be representative of units to be manufactured in quantity and shall be constructed with tools and equipment normally used in quantity production. Sample shall be inspected by the contractor under surveillance of the Government, and shall pass first article inspection specified herein (see 4.3). After first article approval is granted, any change in formula, material, or manufacturing procedure shall void approval. Product with changes incorporated shall be examined and tested in accordance with, and shall pass first article inspection specified herein.

3.2 Materials. Materials shall be as specified herein and in referenced specifications and standards. Material shall be free from defects which adversely affect performance or serviceability of the finished product (see 4.1.2 and 6.5).

3.2.1 Use of wood groups. Any wood groups listed in MIL-STD-731 may be used for lumber for Type I contaners. Only the species in Wood Groups II, III, and IV shall be used for lumber for Type II through Type V containers (see 4.1.2).

3.2.2 Lumber. Lumber shall be seasoned to a moisture content of not more than 19 percent nor less than 12 percent of its oven-dry weight. Pieces shall be free from defects that weaken them or interfere with the prescribed fabrication or nailing. No knot shall have a diameter exceeding one-fourth

Downloaded from http://www.everyspec.com

of the width of the piece. Exterior boards shall be sufficiently smooth on the outside surface to permit legible stencil markings. Lumber shall be of nominal sizes unless otherwise specified herein (see 4.1.2).

3.2.3 Nails. Cement-coated nails conforming to FF-N-105 or chemically etched nails shall be used. Bright nails may be used when they can be clinched no less than 1/8 inch (see 4.1.2).

3.2.4 Bolts. Standard carriage or step bolts conforming to FF-B-584 shall be used (see 4.1.2).

3.2.5 Lag bolts. Lag bolts shall conform to FF-B-561 (see 4.1.2).

3.2.6 Washers. Flat washers conforming to FF-W-92 shall be used under nuts of all securing bolts (see 4.1.2).

3.2.7 Metal strapping. Metal strapping shall be 1-inch wide by 0.0625-inch thick standard punched strapping; or 1 1/2-inch by 0.035-inch thick salvaged strapping may be used (see 4.1.2).

3.2.8 Inspection hinges. Inspection hinges shall conform to figure 1 (see 4.4.2.3).

3.2.9 Plywood. Plywood shall conform to NN-P-530, Group A (PS-51, Type I, Grade 3 or 4) or Group B (Standard interior with exterior glue)(see 4.1.2).

3.2.10 Preservative application. Nuts, lifting devices, washers, bolts, hold-down irons, and straps shall be coated with corrosion-preventive compound conforming to MIL-C-16173, Grade 1 (see 4.4.2.3).

3.3 Drawings. When specified (see 6.2), prior to starting production, the contractor shall submit two reproducible copies of drawings of the container prepared in accordance with MIL-D-1000, for approval by the acquisitioning activity.

3.4 Design and construction. Containers shall be of minimum practicable size and weight in conformance with the requirements specified herein. A minimum clearance of 1 inch shall be provided between the item and all parts of the container, except the item supports, when the item is packed for shipment or storage. A clearance of 2 inches to 4 inches shall be provided for items packaged in barriers in accordance with Method IA-16 or II of Specification MIL-P-116 and for fragile parts which may be damaged due to slight distortion of the container. The outside dimensions of Types I, II, and III containers shall not exceed 12 feet in length, 4 feet in width, and 3 feet in height (see 4.4.2.3).

3.4.1 Disassembly of item. Disassembly of the item to provide maximum reduction in cubage shall be considered in the design of the container, provided no special tools or instructions are required to reassemble the item.

Downloaded from http://www.everyspec.com

3.4.2 Inspection hinges. When specified for Type IV or Type V containers (see 6.2), inspection hinges (see 3.2.8) shall be installed on the side and end panels as required. Openings for inspection hinges shall be located in container without cutting into frame members (see 4.4.2.3).

3.4.3 Interchangeability. Cover assembly and base of each container shall be interchangeable with cover assembly and base of other containers of the same design for the same item (see 4.4.2.3).

3.4.4 Type I containers. Unless otherwise specified (see 6.2), containers constructed for Type 3 loads shall conform to Style 2 of PPP-B-621 and figure 2 of this specification (see 4.4.2.3).

3.4.4.1 Removable top. Removable tops shall be modified to form a panel by the addition of two cleats of 2-inch by 4-inch material and two cleats of 1-inch by 4-inch material, with the panel sheathing running crosswise to the long dimension of the container (see figure 2). The 2-inch by 4-inch cleats, whose length shall be equal to the inside length of the container, shall be placed on edge at right angles to the grain of the top sheathing and set back from the end of the sheathing a distance equal to the thickness of the sides. The 1-inch by 4-inch cleats shall fit between and at right angles to the 2-inch by 4-inch cleats and shall be set back from the edge of the top panel a distance equal to the sum of the thickness of the end panel plus the thickness of the end cleat of the container. The top panel shall be nailed to the 2-inch by 4-inch cleats with two rows of eightpenny cement-coated sinker nails spaced 2 inches apart and staggered. The 1-inch by 4-inch cleats shall be nailed with two rows of nails spaced 6 inches apart in each row and staggered. Nails securing the 1-inch by 4-inch cleats shall pass through the top panel and then through the 1-inch by 4-inch cleats, shall be of sufficient length to provide a clinch of 1/4 inch.

3.4.4.2 Additional side cleat or strap. If the nature of the item and blocking permits, additional cleats of 1-inch by 4-inch material shall be secured lengthwise along the bottom of the sides. These cleats shall be secured to the inside of the sides with two rows of nails spaced 2 inches apart and staggered, and long enough to permit a 1/4-inch clinch. The bottom shall be nailed to these cleats but not to the sides with sevenpenny cement-coated nails spaced 6 to 8 inches apart. If this method of securing the bottom to the side is not feasible, steel straps, 1-inch wide by 0.0625-inch thick shall be secured to the outside of each side and the bottom with six fivepenny nails, three through the bottom and three through the side with the nails clinched. These straps shall be located not more than 15 inches apart (see figure 2).

3.4.4.3 Closure. The top shall be secured to the sides with lag bolts (see figure 3). Lag bolts shall be 5/16 inch in diameter and 2 1/2 inches long. There shall be a minimum of four lag bolts and five flat washers per container, one near each corner. Lag bolts shall pass through the side panel and into the longitudinal cleat of the top. Lag bolts shall be spaced not more than 30 inches on center and located not more than 12 inches from the end of the container (see 4.4.2.3).

Downloaded from http://www.everyspec.com

3.4.4.3.1 Lead hole for shank of lag bolt. The lead hole for the shank of the lag bolt shall be the same diameter as the shank even though the threaded portion may have a greater diameter than the shank.

3.4.4.3.2 Lead hole for threaded portion. The lead hole (in the longitudinal cleat of the top) for the threaded portion shall be 3/16 inch in diameter for the 5/16-inch lag bolts; except when Wood Group IV woods are used, the lead hole shall be 1/4 inch in diameter. When the threaded portion is of a greater diameter than the shank of the lag bolt, the lead hole for the threaded portion shall be 1/8 inch less in diameter than the diameter of the threaded portion; except in Wood Group IV woods the lead hole shall be 1/16 inch less in diameter than the diameter of the threaded portion.

3.4.4.3.3 Installation of lag bolts. Lag bolts shall be turned in their holes the full distance and shall not be driven with a hammer. If the threads in the wood are stripped, the lag bolt shall be removed and placed in a new hole near the old location. There shall be a flat washer under the head of each lag bolt. Countersinking for lag bolts shall be prohibited.

3.4.4.4 Reinforcing. Each lower corner of the container shall be reinforced with three steel straps and each upper corner shall be reinforced with one steel strap 10 inches to 12 inches long (see figure 2). Each strap shall be nailed to the container with six fivepenny cement-coated nails, clinched if possible (see 4.4.2.3).

3.4.5 Type II and Type III containers. Unless otherwise specified (see 6.2), containers constructed for Type 3 loads shall conform to figures 4 through 10 of this specification (see 4.4.2.3).

3.4.5.1 Base. The base shall be constructed in accordance with 3.4.5.1.1 through 3.4.5.1.2.3 and figures 4 (Type II) and 5 (Type III).

3.4.5.1.1 Skids. The base shall be framed on two longitudinal skids having a minimum nominal size of 3 inches by 3 inches for containers carrying a net load not exceeding 1600 pounds. The ends of the skids shall be leveled.

3.4.5.1.1.1 Rubbing strips. Rubbing strips of 2-inch by 3-inch material shall be nailed to the skids used for Type III containers. Rubbing strips shall be located 4 inches from the ends of the skids and have a 36-inch space between them (see figure 5) so that fork-lift trucks can enter from the side of long containers (see 4.4.2.3). The ends of the rubbing strips shall be leveled. The rubbing strips shall be nailed to the skids with sixteenpenny cement-coated nails spaced 10 inches apart and staggered.

3.4.5.1.2 Floor boards (see 4.4.2.3).

3.4.5.1.2.1 End. The end floor boards or headers shall be laid at right angles to the skids. Headers shall be the same cross-sectional dimension as the skids. Headers shall never be smaller than load-bearing floor boards. Headers shall be secured to each skid by means of a 3/8-inch carriage bolt. Each bolt shall have one appropriately sized washer at the nut end. All bolts shall have the heads on the underside of the skids. For Type II

Downloaded from http://www.everyspec.com

containers, headers shall be cut flush with the outside edge of the skids and shall be set back from the ends of the skids a distance equal to the thickness of the end sheathing. When 3-inch by 3-inch headers are used with 2-inch load-bearing floor boards, the headers shall be notched to receive the bottom side horizontal frame member (see figure 4). For Type III containers, headers shall be cut so as to set back from the outside edge of the skids a distance equal to the thickness of the bottom side horizontal frame member, and set back from the ends of the skids a distance equal to the thickness of the end sheathing (see figure 5).

3.4.5.1.2.2 Load-bearing. For Type II container, load-bearing floor boards shall be of nominal 2-inch or 3-inch thick material, cut flush with the outside edge of the skids (see figure 4), and placed where the concentrated loads of the contents occur. The size of the load-bearing floor boards shall be as specified in table I. Nominal 2-inch thick load-bearing floor boards shall be fastened to the skids with three sixteenpenny cement-coated or etched nails at each intersection with a skid. Nominal 3-inch thick load-bearing floor boards up to 6 inches in nominal width shall be secured to each skid with a 3/8-inch carriage bolt. When the floor boards are over 6 inches in width, two such bolts shall be used at each skid. Type III containers shall have axle supports instead of load-bearing floor boards (see 3.4.5.1.2.4).

TABLE I. Allowable load per inch of floor board width for load-bearing floor boards.

Distance between outside skids	1 1/2 inches thick (actual)		2 1/2 inches thick (actual)	
	Wood groups		Wood groups	
	II	III-IV	II	III-IV
Inches	Pounds	Pounds	Pounds	Pounds
12	220	264	574	689
18	146	175	382	458
24	110	132	287	344
30	88	106	229	275
36	73	88	192	229
42	62	75	163	196
48	55	66	144	172

3.4.5.1.2.3 Diagonal. Single 1-inch by 6-inch diagonal floor boards shall be placed between load-bearing floor boards, and between load-bearing floor boards and headers on Type II containers (see figure 4); and between axle supports, and between headers and axle supports on Type III containers (see figure 5). When the width of the base is more than three times the distance between the heavier members, diagonals shall not be used. Diagonal floor boards on Type II containers shall be cut flush with the outside edge

Downloaded from http://www.everyspec.com

of the skids and nailed to each skid with not less than six eightpenny cement-coated nails. The diagonal floor boards on Type III containers shall be cut to set back from the outside edge of the skids a distance equal to the thickness of the bottom side horizontal frame member and shall be nailed to the skids with no fewer than six sevenpenny cement-coated sinker nails at each contact point.

3.4.5.1.2.4 Axle supports. Type III containers shall have axle supports of nominal 2-inch by 4-inch material placed on edge across the skids at appropriate locations to support the item to be crated. The axle supports shall be cut flush with the outside edges of the skids and shall be secured to each skid with a 3/8-inch carriage bolt at each contact point. Each bolt shall have one appropriately sized washer at the head and one at the nut end. All bolts shall have the heads on the underside of the skid.

3.4.5.2 Top. The top shall be constructed as shown in figure 6. The number of panels in the top shall be determined by the length and width of the container and by placing the diagonals at an angle of approximately 45°. A minimum of one pair of crossed diagonals shall be used in each panel of the top. To eliminate bowing of these diagonals, the ends of one diagonal of each pair shall be placed beneath the end sheathing board and the 1 inch by 6 inch additional sheathing member if there is more than one panel. The top diagonals shall be 1 inch by 6 inches and shall be double-mitered as shown in figure 6. The end sheathing boards shall be 1 inch by 8 inches and the intermediate sheathing boards shall be 1 inch by 6 inches. The over-all length and width of the top section shall be 1/4 inch less than the outside length and width of the container so that the edges of the top will set back approximately 1/8 inch from the outside face of the side and end panels (see 4.4.2.3).

3.4.5.2.1 Framing members. The top shall have 2-inch by 4-inch frame members placed on edge.

3.4.5.2.2 Top bracing joist. A 2-inch by 4-inch top bracing joist shall be placed flatly at the center of balance to carry the pressure when the container is lifted by a single set of grabhooks. This joist shall extend from one longitudinal member of the container top to the other longitudinal member and shall be set down at a minimum of 3/4 inch below the top surface of the frame members (see figure 6).

3.4.5.2.3 Nailing. The frame members (see 3.4.5.2.1) shall be fastened at each corner with three twelvepenny cement-coated sinker nails driven into the end grain of the transverse frame member. In nailing the end sheathing board to the end frame member of the top, eightpenny cement-coated sinker nails shall be used in two rows, staggered, and spaced 8 inches center to center in each row. In nailing the end sheathing boards and diagonals to the longitudinal frame members of the top, four eightpenny cement-coated sinker nails shall be used at each contact. In nailing diagonals to each other, five sevenpenny nails shall be used and shall be clinched. In nailing the 2-inch longitudinal top frame members to the top bracing joist, three twelvepenny cement-coated sinker nails shall be driven into each end of the joist.

Downloaded from http://www.everyspec.com

3.4.5.3 Sides. The sides shall be constructed as shown in figure 7. The number of panels in the side shall be determined by the length and height of the container and by placing the diagonals at an angle of approximately 45°. A minimum of one pair of crossed diagonals shall be used in each panel length. The upper and lower frame members, diagonals, and struts shall be 1-inch by 4-inch material; except the corner posts shall be 2-inch by 4-inch material to give sufficient nailing area to fasten the ends. The lower frame member shall rest on the headers and load-bearing floor boards on Type II containers (see figure 8). On Type III containers, the lower frame member shall rest on the skids (see figure 9). Framing members shall be cut to set back from the ends of the skids a distance equal to the thickness of the end sheathing plus the end framing member.

3.4.5.3.1 Vertical struts, corner posts, and diagonals. The vertical struts and corner posts shall be continuous from the lower frame member to the upper frame member. The diagonals shall be cut to fit between the vertical struts.

3.4.5.3.2 Partial sheathing. Sheathing boards shall be one piece, 1 inch in thickness and shall be applied vertically. End boards of all sides shall be nominally 8 inches wide. There shall be a minimum number of sheathing boards as shown in figure 6 to hold the diagonals and vertical struts in place. The sheathing board located at the intersection of diagonals shall be nominally 6 inches wide on Type II containers and nominally 8 inches wide on Type III containers. The sheathing boards located at the struts shall be nominally 8 inches wide. If more than the minimum number of sheathing boards are desired, the additional boards shall be placed near the center of the sides.

3.4.5.3.3 Nailing. Nails securing sheathing boards to frame members shall be clinched. Nail sizes shall permit clinching at least 1/4 inch. For nailing sheathing to horizontal and diagonal frame members, three rows of nails shall be used. There shall be a minimum of three nails in sheathing boards from 4 to 6 inches wide where they cross frame members and a minimum of four nails in wider boards. For nailing sheathing to vertical frame members, two rows of nails shall be used. The nails shall be placed on 6-inch centers in each row and staggered (see figure 10).

3.4.5.4 Ends. The ends shall be constructed as shown in figure 7. Construction of ends and sizes of members for ends shall be similar in every way to the sides. The struts at the corners shall be of 1-inch by 4-inch material. Only single diagonals need to be used in the ends of Type II crates, but the ends shall be made so that the diagonals of the ends will run in opposite directions when the container is assembled. The fabrication nailing of the ends shall be in accordance with nailing of sides.

3.4.5.5 Assembly of container. The base, sides, and ends of the container shall be fastened together by nailing. When nails pass through the sheathing and end strut of the end panel and into the corner post of the side panel twentypenny cement-coated sinker nails shall be used, spaced not more than 10 inches apart. Holes shall be drilled through the end sheathing and strut for these nails using a drill bit having a diameter of approximately 75 percent of the diameter of the nail. In nailing the side and end sheathing

Downloaded from http://www.everyspec.com

to the skids and headers, eightpenny or ninepenny cement-coated cooler or sinker nails shall be used. In each sheathing board, there shall be one nail for every 2 inches of nominal board width. When side sheathing extends over the bevel at the end of skids, the sheathing shall be cut flush with the bevel. Assembly of Type II containers shall be in accordance with figures 4,6,7,8,10 and 11, and Type III containers in accordance with figure 5,6,7,9, 10 and 12.

3.4.5.5.1 Top. The top shall be secured to the sides with lag bolts (see 3.4.4.3.1, 3.4.4.3.2, and 3.4.4.3.3). Lag bolts shall be 5/16 inch in diameter and 3 1/2 inches long. There shall be a minimum of six lag bolts and flat washers per crate. Lag bolts shall pass through the side sheathing and upper side horizontal frame member and into the longitudinal frame member of the top. One lag bolt shall be located midway on each side of the container. The remaining lag bolts shall be located along the top edge of the sides spaced not more than 30 inches on center, and located not more than 18 inches from the end of the container (see figures 11 and 12) (see 4.4.2.3).

3.4.5.5.2 Reinforcing. Each vertical edge of the container shall be reinforced with two steel straps 16 inches long as shown in figures 11 and 12. Each strap shall be nailed through the sheathing into the edge members with six fivepenny cement-coated nails (see 4.4.2.3).

3.4.6 Type IV and Type V containers. Unless otherwise specified (see 6.2) containers constructed for Type 3 loads shall conform to figures 13 through 20 of this specification.

3.4.6.1 Assembly and nailing of containers. Container shall be assembled and nailed as specified in table II.

3.4.6.2 Base. The base floor boards shall be constructed of nominal 2-inch thick lumber. Figure 13 is an example of a container base.

3.4.6.2.1 Sills. Sills shall be of nominal 2-inch thick lumber and width shall be of standard mill size, as applicable. Sill may be strengthened by the use of additional vertical sill bolts (see 3.4.6.2.2) if pack fails when tested as specified in 4.3. Height of sill shall provide area necessary for nailing base-blocking securely. Side and end sills shall be the same height (see 4.4.2.3).

3.4.6.2.2 Bolts . For Type IV containers, sill, floor, and skid shall be bolted together with 1/2-inch diameter vertical sill bolts. For Type V containers, vertical sill bolts of 1/2-inch diameter shall be utilized as specified for Type IV containers. No fewer than three bolts shall be used on each side sill, and no fewer than two bolts shall be used for each end sill. When applicable, bolts shall be countersunk into sill and skid so ends will not protrude (see 4.4.2.3).

3.4.6.2.3 Skids. Skids shall be spaced no more than 48 inches apart measured center to center. Unless otherwise specified (see 6.2), skids for Type IV containers shall be made of 3-inch by 4-inch (flat) lumber, and skids for Type V containers shall be made of 4-inch by 4-inch lumber. When necessary, skids of greater width may be used to hold bolts for securing blocking to base.

TABLE II. Schedule for fabrication and assembly nailing.

Fasten Part	To Part	Nail size and type	Maximum spacing (inches)	Notes
FABRICATION OF BASE				
Side sills	End sills	20d cc	3	Three nails per joint through floor.
Floor (Nom. 1 inch)	Sills	8d cc	3	
(Nom. 2 inch)	Sills	16d cc	3	
Floor (Nom. 1 inch)	Skids	7d cc	3	Stagger.
(Nom. 2 inch)	Skids	12d cc	3	Stagger.
Crossmembers	Skids	12d cc	3	Three nails per joint.
(Applies to Nominal 1-inch Floor)				
End spacers	Side sills	12d cc		Three nails per space.
End sills	End spacers	20d cc		Three nails per space.
Cross support	End spacers	20d cc	3	Three nails per space.
Cross support and sills	Skids	1/2-inch dia. bolts		Minimum, one bolt per skid through floor.
Side support	Side spacers	20d cc	3	
End sills	Side support	20d cc		Three nails per support.
Cross support	Side support	20d cc	3	
Side sills	Side spacers	20d cc		Three nails per space.
Side spacers	Cross support	12d cc	3	Stagger.
Side and end sills	Support posts	20d cc		Three nails per joint.
Separators	Cross support and end sill	7d cc	3	Stagger.
Rubbing strips	Skids	12d cc	6	Stagger.
FABRICATION OF PANELS:				
Sheathing of sides and ends	Upper edge members of sides and ends	10d common	1 3/4	Stagger and clinch.
Sheathing of sides and ends.	Lower edge members of sides and ends.	6d common	1 3/4	Stagger and clinch.

Downloaded from http://www.everyspec.com

TABLE II. Schedule for fabrication and assembly nailing - Continued.

Fasten Part	To Part	Nail size and type	Maximum spacing (inches)	Notes
Sheathing of sides and ends	Corner posts	10d common	3	Stagger and clinch.
Sheathing of sides and ends.	Diagonals and struts	6d common	3	Stagger and clinch.
Strap hangers	Top joists	8d cc		Two nails per hanger.
Ventilator covers	End and side sheathing	3d cc		Three nails per ventilator.
ASSEMBLY OF COVER:				
Sheathing and corner posts of ends.	Corner posts of sides	20d cc	6	
Sheathing and upper edge.	Upper edge of members of ends.	20d cc		Two nails per joint.
Sheathing of sides	Corner posts of ends	8d cc	6	Stagger.
Sheathing of top	Upper edge members of sides.	10d cc	3	Stagger.
Sheathing of top	Upper edge members of ends.	10d cc	6	Stagger.
Upper edge members of sides	Top joists	20d cc		Two nails per joint.
Corner straps	Sheathing and edge members.	5d cc		Six nails per strap.
Strap hangers	Sheathing and edge (upper).	8d cc		Two nails per hanger.
Cover assembly lifting devices.	Cover assembly	Bolts and screws		When applicable. (see 3.4.7.6).

1/ cc means "cement-coated".

Downloaded from http://www.everyspec.com

Downloaded from http://www.everyspec.com

3.4.6.2.4 Rubbing strips. Skids shall have rubbing strips of the same width as the skids secured to the bottom. Strips shall be made of nominal 2-inch lumber, beveled at a 45° angle on each end. For skids having a length of less than 48 inches, rubbing strips shall be the same length as the skid. For skids having a length of 48 inches or greater, rubbing strips shall be set back 8 inches from each end of the skid (see 4.4.2.3).

3.4.6.2.5 Drainage. Drainage shall be provided in the base of container by boring clusters of five 1/2-inch holes wherever water would be trapped. As an alternative, drainage may be obtained by spacing floorboards 1/4-inch to 3/8-inch apart (see 4.4.2.3).

3.4.6.3 Sides and ends. Side and end panels shall be sheathed with either lumber or plywood. When used, plywood shall conform to NN-P-530 (see 3.2.9). Lumber-sheathed side and end panels shall have frame designs of X, HK, or multiples of these types (see figure 14) and shall be lined between the sheathing and the edge members with crate liner material conforming to Class L or M of Specification PPP-B-1055. Frame designs shall be selected so that the angles between diagonals and edge members will be nearest to 45°.The sizes of the side and end members shall be as specified in table III. Plywood-sheathed side and end panels shall not be lined and shall have framing members a specified in the table III footnote (see 4.4.2.3).

TABLE III. Nominal sizes of side and end members.

	Type IV	Type V
Sheathing 2/:		
Plywood	1/2-inch	1/2-inch
Lumber.	1-inch	1-inch
Lower edge member	1-inch width (as required)	2-inch width (as required)
Upper edge member	2-inch by 4-inch	2-inch by 6-inch
Cornerposts	2-inch by 4-inch	2-inch by 4-inch
Struts:		
With plywood sheathing. . . .	1-inch by 4-inch	1-inch by 4-inch
With lumber sheathing	2-inch by 4-inch	2-inch by 4-inch
Diagonals:		
With plywood sheathing . . .	not required	not required
With lumber sheathing . . .	2-inch by 4-inch	2-inch by 4-inch

2/ When plywood sheathing is used, diagonals are not required; however, additional horizontal and vertical 1-inch by 4-inch struts shall be used so that no unsupported area is greater than 2 feet by 3 feet.

Downloaded from http://www.everyspec.com

3.4.6.3.1 Ventilation. Ventilation holes 1 1/2 inches in diameter, shall be provided for each ventilator in sides and ends. Ventholes shall not be drilled in structural members. Ventilators shall conform to figure 15 or 16. One ventilator shall be provided for each 8 feet of container perimeter (see 4.4.2.3).

3.4.6.4 Top. Container top (see figure 17) shall be fabricated in accordance with the requirements specified in 3.4.6.4.1 or 3.4.5.4.2. Tops shall be set back 1/8 inch from the overall exterior dimensions of sides and ends (see 4.4.2.3).

3.4.6.4.1 Lumber-sheathed top. The top shall be constructed with one layer of 1/2-inch to 5/8-inch thick lumber butt-jointed and lined with prepared roofing felt conforming to Class B of Specification SS-R-501(see 4.4.2.3) and under layer of 1/4-inch plywood conforming to NN-P-530 (see 3.2.9) All roofing felt joints shall overlap a minimum of 4 inches and be coated with mastic. Plywood shall be secured to the sheathing with twopenny nails clinched into sheathing.

3.4.6.4.2 Plywood-sheathed top. Sheathing shall be 1/2-inch plywood conforming to NN-P-530 (see 3.2.9) without the use of a liner. Crosswise butt-joints shall be permitted when the required top sheathing size exceeds 48 inches in width or 96 inches in length. Plywood joints shall be centered on and nailed to a nominal 2-inch by 6-inch flat top joist (see 3.4.6.5). Each piece of plywood shall be nailed to the joist with sevenpenny nails at maximum nail spacing of 4 inches.

3.4.6.5 Top joist. Each container shall have no less than one top joist (see 4.4.2.3). Joists shall be supported at each end by joist hangers. Unless otherwise specified (see 6.2), the top shall not be nailed to the joists and the top of the joists shall be flush with the top of the upper edge members of the side panels. Size and spacing of top joists shall conform to table IV.

TABLE IV. Size and spacing of top joists.

Length of joist (Inches)	Nominal size and position of joists (Inches)	Maximum spacing, center to center (Inches)
0-35	2 by 4, flat	21
	2 by 4, on edge	30
36-42	2 by 4, flat	16
	2 by 4, on edge	27
	2 by 6, flat	21

3.4.6.6 Cover-lifting devices. Cover assemblies weighing over 150 pounds shall be provided with a minimum of four cover-lifting devices. The cover-lifting devices shall conform to figure 18 for container covers up to 250 pounds, and to figure 19 for container covers over 250 pounds, and shall

Downloaded from http://www.everyspec.com

be recessed into the cover assembly to prevent interference. The devices shall be applied over the edge formed by the side and top approximately 4 inches from end sheathing (see figure 20). Cover-lifting devices shall be fastened to the cover assembly with attaching parts as indicated on figures 18 or 19. Washers shall be used under all nuts. When tested as specified in 4.5.3 there shall be no fracture, distortion, loosening, or other deflection in cover-lifting device.

3.4.6.7 Reinforcing. The container cover assembly shall be reinforced with one steel strap 10 to 12 inches long, fastened through the lower edge members at each lower corner, and three steel straps crossing each other at each upper corner (see figure 20). Additional reinforcing, as required, shall be effected along each horizontal and vertical edge by the placement of intermediate straps. The distance between straps shall be a maximum of 36 inches. All straps shall be nailed to the container cover assembly with six fivepenny cement-coated nails (see 4.4.2.3).

3.4.6.8 Closure. Closure of container shall be effected by placing assembled cover (see table II) over the base and securing with lag bolts through the sides and ends of cover assembly into the sills of the base (see figure 20). Lag bolts shall pass through the sheathing and lower edge members of the side and ends and into the sills of the base. Minimum number of lag bolts used for ends and sides shall conform to table V. On each side and end, lag bolts shall be placed 5 inches to 8 inches from each end of panel and intermediate lag bolts shall be spaced not more than 20 inches apart. A lockwasher shall be placed between the flat washer and the head of each bolt. Minimum size of lag bolts shall be 1/2 inch by 3 inches for Type IV and Type V containers constructed of lumber sheathing. For plywood-sheathed containers 1/2-inch by 4-inch lag bolts shall be used (see 4.4.2.3).

TABLE V. Minimum number of lag bolts for attaching cover assembly to base.

Combined weight of item and container	No. per end	No. per side
1,001 - 2,000 pounds	2	4
2,001 - 4,000 pounds	3	4
4,001 - 7,000 pounds	3	3/

3/ In accordance with Table XXIII of Specification MIL-C-104.

3.4.6.8.1 Application of lag bolts. The portion of the lead hole for the shanks of lag bolts shall be the same diameter as the shank. The portion of the lead hole for the threads of lag bolts shall be 3/8 inch in diameter for 1/2-inch diameter lag bolts. Lag bolts shall be placed by turning in their lead holes the full distance of the threaded portion. Lag bolts shall not be driven with a hammer or by any other means. If the threads made in

Downloaded from http://www.everyspec.com

the wood are stripped when placing the lag bolts, the lag bolts shall be removed and placed in a new hole near the old position. Countersinking of lag bolts shall be permitted.

3.4.7 Blocking (see 4.4.2.3).

3.4.7.1 Blocking for Type I and Type II containers.

3.4.7.1.1 Blocking. Blocking shall be such that the item to be packed can easily be secured in the container or removed without use of special tools. Blocking shall be in accordance with the following as required.

3.4.7.1.1.1 Built-in cradle. Unless otherwise specified (see 6.2), a cradle shall be built into the container. The cradle shall be so constructed as to support the item to be packed and to prevent sidewise and endwise movement of the item.

3.4.7.1.1.2 Removable cradle. When specified (see 6.2), a removeable cradle shall be secured to the ends or sides of the container with a minimum of four 3/8-inch bolts. The cradle and fasteners shall be sufficiently strong to hold the packed item securely in position (see figure 21A).

3.4.7.1.1.3 Bolted hold-down braces. Unless otherwise specified (see 6.2), hold-down braces shall be bolted to the base of container, or bolted to supports securely fastened to the side or ends of the container (see figures 22A and 22B).

3.4.7.1.1.4 Hold-down irons and straps. When hold-down braces are not used, a minimum of two steel straps shall be placed under the cradle or shall be securely fastened to the base of the container for bolting over the top of item to be packed. Steel strapping shall be a minimum of 1 1/2-inch width by 0.050-inch thickness for Type I containers and a minimum of 2-inch width by 1/8-inch thickness for Type II containers. A square washer having a minimum thickness of 3/16 inch shall be provided at bolted ends of each strap to prevent straps from being deformed in use so they cannot be reused.

3.4.7.1.1.5 Direct bolting. When the item to be packed is provided with suitable mounting brackets or lugs, direct-bolting may be provided by drilling matching holes in the base of the container. When required to adequately support the item to be packed, braces or a cradle shall be provided (see figure 21C). Provision shall be made for bolting or otherwise securing any parts disassembled from the item for packing.

3.4.7.2 Blocking for Type III containers.

3.4.7.2.1 Blocking. A minimum of two supports shall be bolted to the skids of the containers for securing the driving axle assembly (see figure 23).

3.4.7.2.1.1 Supports. Axle assembly supports (see figure 23), shall be nominally 4-inch thick members of sufficient height to give the required 1-inch clearance between the floor of the container and the lowest projection on the axle assembly for which the container is designed. The supports shall

Downloaded from http://www.everyspec.com

be at right angles to the skids and shall extend completely across the width of the container. The supports shall be set back from the outside edge of the skids a distance equal to the thickness of the lower horizontal side frame member. The supports shall be notched if necessary, so that the axle assembly will have firm bearing. Each support shall be secured to each skid of the container with one carriage bolt 1/2 inch in diameter.

3.4.7.2.1.1.1 Location of supports. The supports may be located either inside or outside the drums of the axle assembly and shall prevent lengthwise movement of the assembly. The distance between the two supports shall be not less than 30 percent of the inside length of the container.

3.4.7.2.1.1.2 Support braces. Axle assembly supports shall be braced by nailing boards of 1-inch nominal thickness to the lower horizontal frame members, and to the struts of the sides between the two supports, and between each support and the end of the container. If the supports are located at the extreme ends of the container, the end of the container may be nailed to them and the support braces omitted.

3.4.7.2.1.2 Hold-down. Provision shall be made for securely fastening the axle assembly to the axle supports either by bolting the assembly directly to the supports or by holding it with hold-down irons or wooden hold-down braces bolted to the supports (see figure 23). In all cases, four bolts, 1/2-inch minimum diameter shall be used. If the axle assembly support is built of several pieces, hold-down bolts need not pass through the entire depth of the support. The heads of the bolts shall be at least 3 inches below the axle assembly bearing surface.

3.4.7.2.1.2.1 Direct bolting. Bolt holes shall be drilled in the supports to match the bolt holes in the axle housing and shall be of the same size (see figure 23A).

3.4.7.2.1.2.2 Hold-down irons. Hold-down irons shall be shaped to fit the axle housing. The depth of the bend in the iron shall be such that when the iron is placed over the axle assembly, the bolting ears will be approximately 1/8 inch above the axle support (see figure 23B). These irons shall be minimum 1 1/2-inch by 1/4-inch steel.

3.4.7.2.1.2.3 Hold-down braces. Wooden hold-down braces shall be shaped to fit the axle housing (see figure 23C). The depth of the cut shall be such that when the brace is placed over the axle assembly the bottom of the brace will be 1/8 inch to 1/4 inch above the top of the axle assembly support. Braces shall be nominally 4 inches thick and shall be sufficiently deep so that there will be at least 3 inches of solid wood above the axle housing. Support braces (see 3.4.7.2.1.1.2) shall be provided between the two hold-down braces and between the hold-down braces and the ends of the container.

3.4.7.2.1.3 Differential blocking. Differential blocking when required to prevent rotation of the axle assembly in the container, shall be bolted to the skid or nailed securely to the side of the container (see figure 23B).

Downloaded from http://www.everyspec.com

3.4.7.3 Blocking for Type IV and Type V containers.

3.4.7.3.1 Blocking. Blocking shall be fabricated from lumber conforming to Wood Group III or IV of MIL-STD-731. Base blocking shall support and provide hold-down locations for items and shall transfer weight of items to sills and skids. Side supports shall be the principle load-bearing members except when item is packaged in conformance with Method IA-16 or IIa of MIL-P-116. For Method IA-16 or II-a packs, side supports shall be placed in a manner to allow clearance for the bag barrier to prevent longitudinal movement during shipment. The item shall be supported at all hold-down points. When item rests on side or edge grain lumber, the moisture content of the blocking member shall be no greater than 19 percent. Depth of blocking shall provide required clearance (see 3.4) between item and the floor or crossmembers of base. Base blocking shall be shaped to fit contours of item and shall be notched or grooved, when necessary, to provide clearance for item projections.

3.4.7.3.1.1 Side supports. Side supports shall be no less than nominal 2-inch lumber and shall be placed to bear on the maximum area possible of the item. When packaged in accordance with Method IA-16 or IIa of MIL-P-116 side supports shall be placed in accordance with 3.4.7.3.1. When notches which have been cut for clearance weaken side supports, the support shall be reinforced along each edge of the notch with a vertical brace (see figure 13). Side support upper surface shall be sheathed with strapping except for Method IA-16 or IIa packs when side supports do not come in contact with the item (see 4.4.2.3).

3.4.7.3.2 Spacers and crossmembers. Skids and sills shall carry the weight of item by means of side spacers and crossmembers. Spacers shall be no less than nominal 2-inch thick members. Spacers shall be placed so that grain of lumber runs vertically. Crossmembers shall be placed on the floor of container between sills.

3.4.7.3.3 Cross supports. Cross supports shall carry the weight of the front of the item. Support members shall be no less than 1 1/2 inches thick. If support member is higher than the sill, it shall be notched at the ends so that upper portion of support will project over the sill (see figure 13). When necessary, upper surface of support shall be shaped to fit the item. When projections rest on support, face of support shall be notched or bored to fit projection. Cross support shall be secured to side supports with nominal 2-inch thick end spacers fitted between end sills and cross support. If cross support is used as hold-down member, it shall be bolted to each skid with 1/2-inch diameter carriage bolts. When possible, these same bolts may be used for hold-down purposes.

3.4.7.3.4 Support posts and blocks. When cross supports or side supports are not provided at hold-down points, a support post or block shall be used (see figure 24). The upper surface of the post or block shall give full bearing to the mounting bracket or seat of the item. Post or block shall be bolted to the skid with a 1/2-inch diameter carriage bolt and shall be securely nailed to the sills. When specified (see 6.2), post or block shall be notched to fit over top of adjacent sills.

Downloaded from http://www.everyspec.com

3.4.7.3.5 Hold-downs. Provisions shall be made to secure the item at front and rear. Utilize brackets or seats normally used to mount item in vehicle, except when brackets or seats will not withstand shock or stress when tested as specified in 4.4.3.1.2.2. Cross-sections of steel mounting plates or brackets shall be no less than 1/4 inch by 1 1/2 inches. Wherever fasteners such as bolts, studs, and capscrews are removed or loosened from the item to attach to hold-downs on base (see figure 24), care shall be exercised when assembling or tightening bolts, studs, and capscrews to avoid stripping of threads, shearing of bolts, or cracking of casting.

3.5 Performance.

3.5.1 Stackability. The container shall be constructed in a manner that shall safely permit stacking of loaded containers to a height of four containers (see 4.5.1).

3.5.2 Rough handling. (see 4.5.2).

3.5.2.1 Corner-wise drop. The container shall be constructed in a manner that shall enable it to withstand a corner-wise drop without damage to its contents (see 4.5.2.1).

3.5.2.2 Pendulum-impact. The container shall be constructed in a manner that shall enable it to withstand a pendulum-impact without damage to its contents (see 4.5.2.2).

3.5.2.3 Incline-impact. The container shall be constructed in a manner that shall enable it to withstand an incline-impact without damage to its contents (see 4.5.2.3).

3.5.2.4 Edge-wise drop. The container shall be constructed in a manner that shall enable it to withstand an edge-wise drop without damage to its contents (see 4.5.2.4).

3.5.3 Cover-lifting device. The cover assembly shall be constructed in a manner that shall enable it to be lifted by any of the four cover-lifting devices without sustaining damage to or distortion of the cover assembly or the cover-lifting device (see 4.5.3).

3.6 Marking. Containers shall be marked in accordance with MIL-STD-129. Stencil ink for marking shall conform to TT-I-1795 (see 4.4.2.3).

3.6.1 Special Marking.

3.6.1.1 Center of balance. The location of the center of balance of the loaded container shall be marked on the bottom edge of both sides with a vertical line 1 inch wide located at the center of balance and clearly marked "CENTER OF BALANCE".

3.6.1.2 Matching assemblies. When cover assemblies can be assembled correctly in one direction only, both the cover assembly and base shall be appropriately marked so they can be matched for assembly.

Downloaded from http://www.everyspec.com

3.6.2 Type I containers.

3.6.2.1 Exterior. The top panel of the container shall be marked (see figure 3) in letters not less than 1/2 inch high as follows:

REUSABLE CONTAINER - DO NOT DESTROY. TO OPEN - REMOVE LAG BOLTS AROUND TOP OF SIDE PANELS.

3.6.2.2 Interior. The following shall be marked in a conspicuous location on the inside of the top panel:

REUSABLE CONTAINER - DO NOT DESTROY.

3.6.3 Type II and Type III containers.

3.6.3.1 Exterior. The top panel of the container shall be marked (see figures 11 and 12) in letters not less than 3/4 inch high as follows:

REUSABLE CONTAINER - DO NOT DESTROY. TO OPEN - REMOVE LAG BOLTS AROUND TOP OF SIDE PANELS.

3.6.3.2 Interior. The interior of the container shall be marked in accordance with 3.6.2.2.

3.6.4 Type IV and Type V containers.

3.6.4.1 Exterior.

3.6.4.1.1 Top panel. The top panel of the container shall be marked (see figure 20) in letters not less than 1 1/2 inches high as follows:

REUSABLE CONTAINER - DO NOT DESTROY. TO OPEN - REMOVE LAG BOLTS AROUND BOTTOM OF SIDE AND END PANELS, THEN LIFT ASSEMBLED TOP, SIDES, AND ENDS FROM BASE.

3.6.4.1.2 Cover-lifting devices. When cover-lifting devices are required (see 3.4.6.6), the following warning shall be placed as close to one of the devices as possible in letters not less than 1 1/2 inches high.

WARNING: COVER-LIFTING DEVICES INTENDED ONLY FOR LIFTING COVER FROM BASE. LIFT LOADED CONTAINER BY BASE ONLY.

3.6.4.2 Interior. the interior of the container shall be marked in accordance with 3.6.2.2.

3.6.5 Metal Plates. Metal plates imprinted with the information specified in 3.6.2.1, 3.6.3.1, or 3.6.4.1 may be used in lieu of stenciled markings. the plates shall be a minimum of 6 inches by 9 inches. They shall be secured to the container with no fewer than six nails of a size sufficient to permit clinching on the inside of the container.

Downloaded from http://www.everyspec.com

3.7 Workmanship. Containers shall be manufactured in a manner as to be uniform in quality and free from defects that will adversely affect their life and serviceability (see 4.4.2.3).

4. QUALITY ASSURANCE PROVISIONS

4.1 Responsibility for inspection. Unless otherwise specified in the contract or purchase order, the contractor is responsible for the performance of all inspection requirements specified herein. Except as otherwise specified in the contract or purchase order, the contractor may use his own or any other facilities suitable for the performance of the inspection requirements specified herein, unless disapproved by the Government. The Government reserves the right to perform any of the inspections set forth in the specification where such inspections are deemed necessary to assure supplies and services conform to prescribed requirements.

4.1.1 Inspection equipment. Unless otherwise specified in the contract, the supplier is responsible for the provision and maintenance of all inspection and test equipment necessary to assure that supplies and services conform to contract requirements. Commerical, modified commercial, or supplier-repetitive measurements to an accuracy of 10 percent of the component tolerance.

4.1.2 Materials and construction. To determine conformance to 3.2 through 3.2.10 inspection, test, and material certification records shall be maintained by the contractor. Records shall be subject to review by the Government. Records shall include date, part or characteristic identification, inspection results, disposition of lot (accepted or rejected), and corrective action taken on noted defects.

4.2 Classification of inspections. The inspections specified herein are classified as follows:

a. First article (preproduction) inspection (see 4.3).
b. Quality conformance inspection (see 4.4).

4.3 First article (preproduction) sample. One first article sample (see 3.1) shall be inspected at a location approved by the Government to determine conformance to requirements of this specification. Inspection shall consist of examination as specified in 4.4.2, and all tests specified in 4.4.3.

4.3.1 Failure. Failure to pass any examination or test, or defects in excess of acceptable quality levels (AQLs) specified, shall be cause for the Government to refuse to grant first article approval until the deficiencies revealed by the inspection have been corrected.

4.4 Quality conformance inspection.

4.4.1 Lot formation. All containers of the same type from the same supplier, offered at one time for delivery shall be considered a lot for purposes of inspection.

Downloaded from http://www.everyspec.com

4.4.2 Quality conformance examination.

4.4.2.1 Sampling for quality conformance examination. Samples for quality conformance examination shall be selected in accordance with level II of MIL-STD-105.

4.4.2.2 Acceptable quality level. Each sample selected in accordance with 4.4.2.1 shall be examined for conformance to the following acceptable quality levels (AQLs) on the basis of percent defective:

Classification	AQL
Major	2.5
Minor	4.0

4.4.2.3 Classification of defects. For examination purposes, defects shall be classified as specified in Table VI.

TABLE VI. Classification of defects in accordance with MIL-STD-105.

Defect	Characteristics	Requirements Paragraph	Method of Inspection
Critical:	AQL 0.0% Defective		
1	Lifting device warning markings omitted.	3.6.4.1.2	Visual
Major:	AQL 2.5% Defective		
101	Materials not as specified.	3.2	Visual
102	Preservative not applied.	3.2.10	Visual
103	Insufficient clearance between item and container members or panels.	3.4	Gage
104	Assembly and components of container not as specified.	3.4.4	Visual/Gage
		3.4.5	Visual/Gage
		3.4.6	Visual/Gage
105	Headers or sills not bolted.	3.4.5.1.2	Visual
		3.4.6.2.1	Visual
		3.4.6.2.2	Visual
106	Liner or roofing felt omitted (when required).	3.4.6.3	Visual
		3.4.6.4.1	Visual
107	Blocking not as specified.	3.4.7	Visual
108	Closure not as specified.	3.4.4.3	Visual
		3.4.5.5.1	Visual
109	Marking omitted or incorrect.	3.6	Visual

Downloaded from http://www.everyspec.com

TABLE VI. Classification of defects in accordance with MIL-STD-105 - Continued.

Defect	Characteristics	Requirements Paragraph	Method of Inspection
Minor:	AQL 4.0% Defective		
201	Rubbing strips not beveled or not set back.	3.4.5.1.1.1 3.4.6.2.4	Visual Visual
202	Drainage holes omitted (when required).	3.4.6.2.5	Visual
203	Ventilation holes not as specified.	3.4.6.3.1	Visual/Gage
204	Top not set back 1/8" from sides and ends.	3.4.5.2 3.4.6.4	Gage Gage
205	Joist spacing exceeds maximum allowed (Table IV).	3.4.6.5	Gage
206	Side supports not sheathed with strapping.	3.4.7.3.1.1	Visual
207	Corner straps not properly installed.	3.4.4.4 3.4.5.5.2 3.4.6.7	Visual Visual Visual
208	Inspection hinges omitted or improper (Type IV and V).	3.4.2	Visual
209	Cover or base not interchangeable with like unit of same type container.	3.4.3	Functional
210	Poor workmanship.	3.7	Visual/Gage

4.4.2.4 Unclassified defects. All defects having no bearing on function, safety, interchangeability, or life, but which are considered departures from good workmanship, shall be noted in writing. Workmanship deficiencies falling within this category and recurring in five consecutive lots or in 10 lots or more within a 30-day period, will be added to the minor classification of defects with no increase in AQLs.

4.4.3 Quality conformance tests.

4.4.3.1 Acceptance tests.

4.4.3.1.1 Sampling for acceptance testing. Samples for acceptance testing shall be selected in accordance with level S-3 of MIL-STD-105.

4.4.3.1.2 Acceptance testing. Each sample selected in accordance with 4.4.3.1.1 shall be examined for defects specified in table VI and shall be subjected to tests specified in table VII.

Downloaded from http://www.everyspec.com

TABLE VII. Acceptance tests.

Name of test	Requirements paragraph	First article (preproduction) and acceptance
Stackability	3.5.1	4.5.1
Rough-handling tests:	3.5.2	4.5.2
Cornerwise-drop	3.5.2.1	4.5.2.1
Pendulum-impact	3.5.2.2	4.5.2.2
Incline-impact	3.5.2.3	4.5.2.3
Edgewise-drop	3.5.2.4	4.5.2.4
Cover-lifting device	3.5.3	4.5.3

4.4.3.1.3 Failure. Failure to pass acceptance examination or test shall be cause for the Government to refuse to accept subsequent lots until it has been proved to the satisfaction of the Government that any deficiency has been corrected.

4.4.3.2 Control tests.

4.4.3.2.1 Sampling for control testing. Sample containers for control testing shall be selected at the rate of three per month or three of each 500 produced, whichever occurs first. Not more than six containers shall be selected in any 30-day test period.

4.4.3.2.2 Control testing. The control test samples shall be identified with production period, examined for defects specified in table VI and subjected to the tests specified in table VII.

4.4.3.2.3 Failure. Failure of a control test sample to pass any specified test shall be cause for the Goverment to refuse to accept subsequent lots until it has been proved to the satisfaction of the Government that the faults revealed by the test have been corrected.

4.5 Conformance verification.

4.5.1 Stackability. To determine conformance to 3.5.1, a load equal to the total weight of three fully packed containers shall be placed on top of the container to be tested.

4.5.2 Rough-handling tests. Samples selected for testing (see 3.1, 3.5.2 and 4.4.3.1.1) shall be packed as for shipment and subjected to the cornerwise-drop test (see 4.5.2.1) followed by the pendulum-impact test (see 4.5.2.2) or the incline-impact test (see 4.5.2.3). If the cornerwise-drop test is impractical because of container size or shape, the edgewise-drop test (see 4.5.2.4) may be substituted in lieu thereof. Container shall be packed with the item for which it was originally designed or with a dummy load of the same size, weight, and weight distribution.

Downloaded from http://www.everyspec.com

4.5.2.1 Cornerwise-drop test. The cornerwise-drop test (see 3.5.2.1) shall be conducted in accordance with the Level A requirements of Method 5005 of Federal Test Method Standard 101 except as modified by table VIII for drop and impact heights.

4.5.2.2 Pendulum-impact test. The pendulum impact test (see 3.5.2.2) shall be conducted in accordance with requirements of Method 5012 of Federal Test Method Standard 101 except as modified by table VIII for drop and impact heights.

4.5.2.3 Incline-impact test. The incline-impact test (see 3.5.2.3) shall be conducted in accordance with the requirements of Method 5023 of Federal Test Method 101 except as modified by table VIII for drop and impact heights.

4.5.2.4 Edgewise-drop test. The edgewise-drop test (see 3.5.2.4) shall be conducted in accordance with the Level A requirements of Method 5008 of Federal Test Methods Standard 101 except as modified by Table VIII for drop and impact heights.

TABLE VIII. Graduated drop and impact test heights.

Gross weight of container and contents	Cornerwise-drop test	Impact tests		Edgewise-drop
Pounds	Height of drop (Inches)	Pendulum Impact (Inches)	Incline Impact (Inches)	Height of drop (Inches)
Through 250	30	14	7.0	30
Over 250 through 500	24	11	5.5	24
Over 500 through 1000	18	8	4.0	18
Over 1000	12	5	2.5	12

4.5.3 Cover-lifting device test. To determine conformance to 3.5.3, cover assembly shall be lifted by use of the cover-lifting devices. The test shall be applied separately to each lifting device on the cover assembly. Lifting devices and component members of the cover assembly shall be examined.

Downloaded from http://www.everyspec.com

5. PACKAGING

5.1 Preservation, packaging, packing, and marking. Preservation, packaging, packing, and marking for the desired level of protection shall be in accordance with the applicable packaging standard or packaging data sheet specified by the contracting authority (see 6.2).

5.1.1 Preparation. Containers shall be shipped completely assembled or disassembled as specified by the acquisition activity (see 6.2). When containers are disassembled for shipment, disassembly shall be in a manner to provide maximum reduction in cubage.

6. NOTES

6.1 Intended use. Reusable containers covered by this specification are intended for use for shipment and storage of engines, transmissions, differentials, transfers, final drives, driving axles, and similar assemblies for which no specific container design is available.

6.2 Ordering data. Acquisition documents should specify the following:

(a) Title, number, and date of this specification.
(b) Type of container required (see 1.2).
(c) If first article (preproduction) sample is not required (see 3.1).
(d) If drawings are to be submitted (see 3.3).
(e) If inspection hinges are required (see 3.4.2).
(f) If Type I containers are to be constructed for Type III loads other than specified (see 3.4.4).
(g) If skids are to be other than specified in 3.4.6.2.3.
(h) If top joist is to be nailed and positioned other than as specified (see 3.4.6.5).
(i) If a built-in cradle is not required (see 3.4.7.1.1.1).
(j) If a removable cradle is required (see 3.4.7.1.1.2).
(k) If the hold-down braces are to be other than specified (see 3.4.7.1.1.3).
(l) If notching of support posts or blocks is required (3.4.7.3.4).
(m) How containers are to be shipped (see 5.1).

6.3 Drawings. When it is required that drawings be submitted, it should be specified that they be furnished with no restrictions regarding their use by the Government in connection with manufacture or acquisition for military purposes.

6.4 First article. First article samples shall be tested and approved under the appropriate provisions of 7-104.55 of the Defense Acquisition Regulation. The contracting officer should include specific instructions in all acquisition instruments regarding arrangements for examination, tests, and approval of the first article (see 3.1 and 4.3).

6.4.1 Waiver of first article inspection. Products manufactured under this specificaton by one manufacturer, for delivery to the Government not more than 12 months after first article approval has been granted, may qualify for waiver of first article inspection.

Downloaded from http://www.everyspec.com

6.5 Recycled materials. The use of recycled materials which meet the requirements of the applicable material specifications without jeopardizing the intended use of the item shall be encouraged (see 3.2).

6.6 Changes in container classification. In this revision, provisions for Type I, Type II and Type III containers of MIL-C-10301A have been added and the Type I and Type II containers of MIL-C-11264B have been redesignated to Type IV and Type V, respectively. The present container types are essentially the same as the containers previously designated.

Custodians:
Army - AT
Navy - MC
Air Force - 69

Review activity:
Army - SM
Navy - SA
Air Force - 99

Preparing activity:
Army - AT

Project No. 8145-0018

Downloaded from http://www.everyspec.com

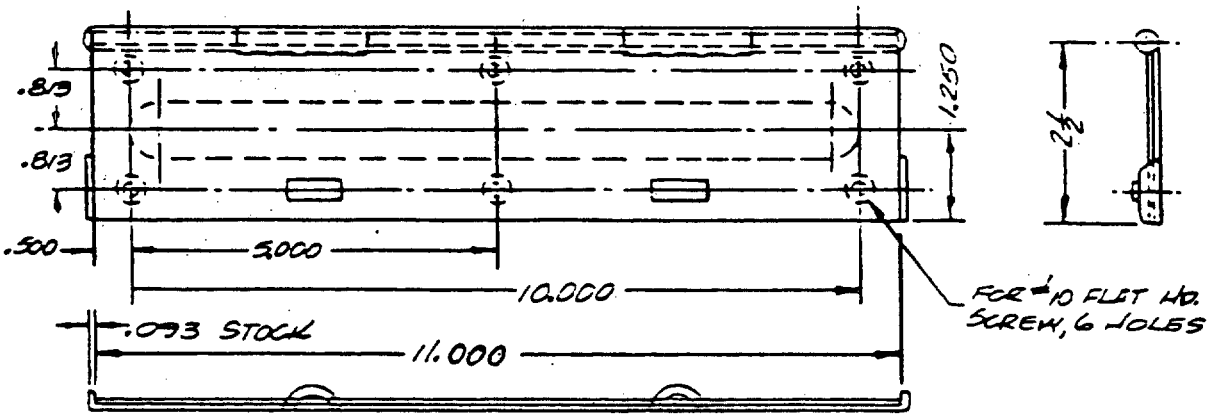

MATERIAL NOTE:

STEEL, CARBON, H.R., P & O

FINISH NOTE:

PHOSPHATE COAT TYPE Z, CLASS 1
MIL-P-16232

FIGURE 1. Inspection hinge.

Downloaded from http://www.everyspec.com

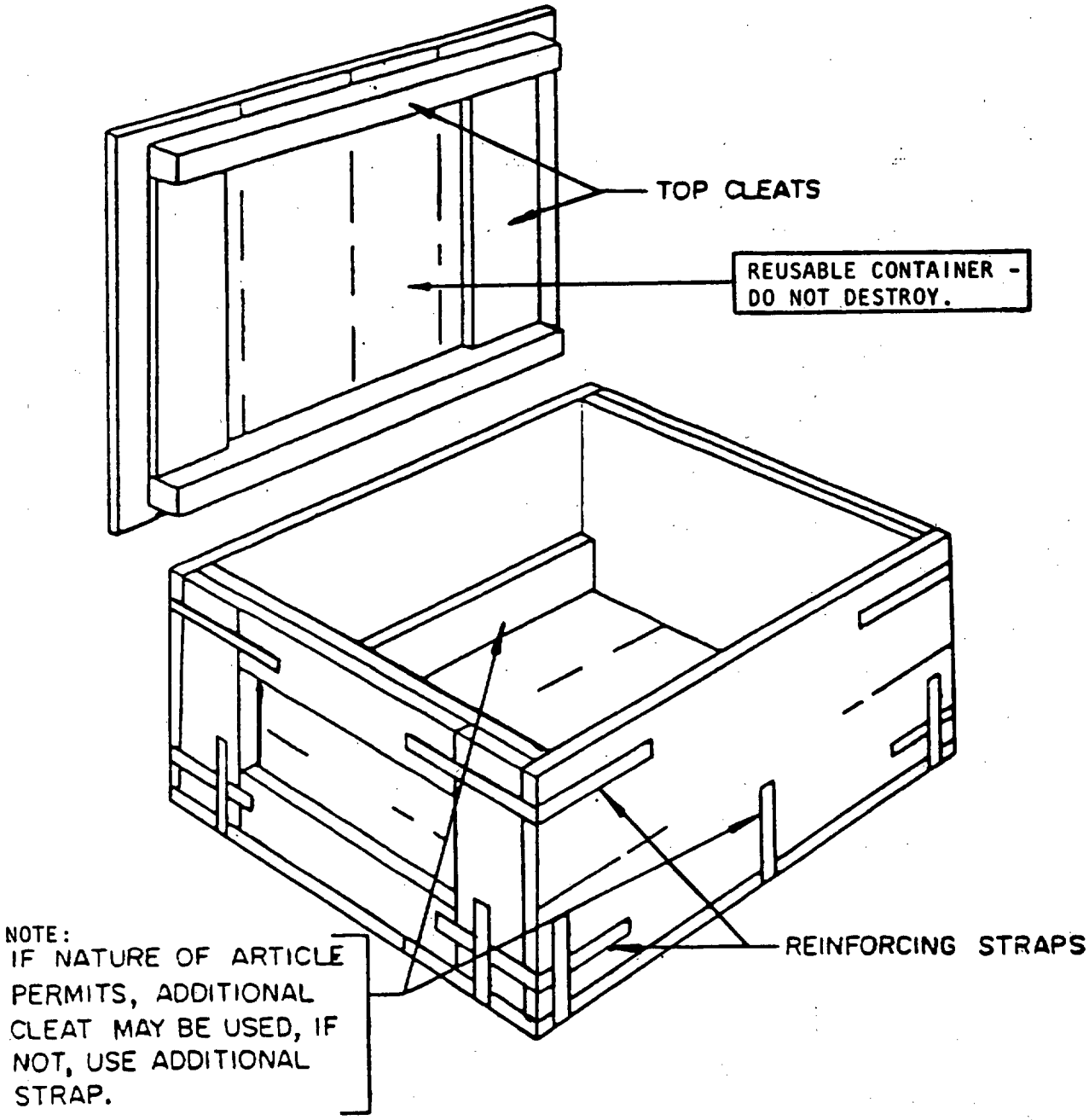

FIGURE 2. Construction of type I reusable container.

Downloaded from http://www.everyspec.com

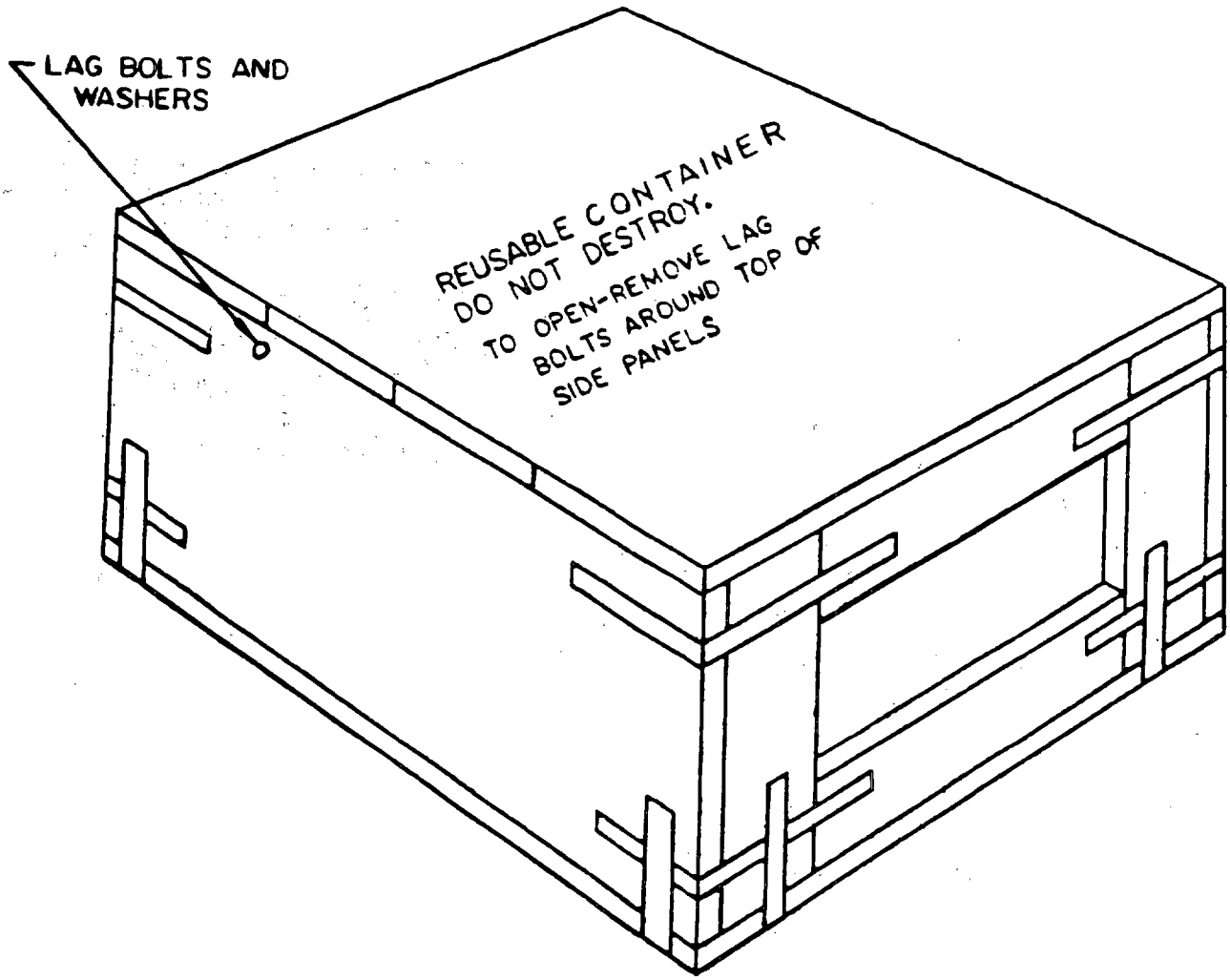

FIGURE 3. Marking for type I containers.

Downloaded from http://www.everyspec.com

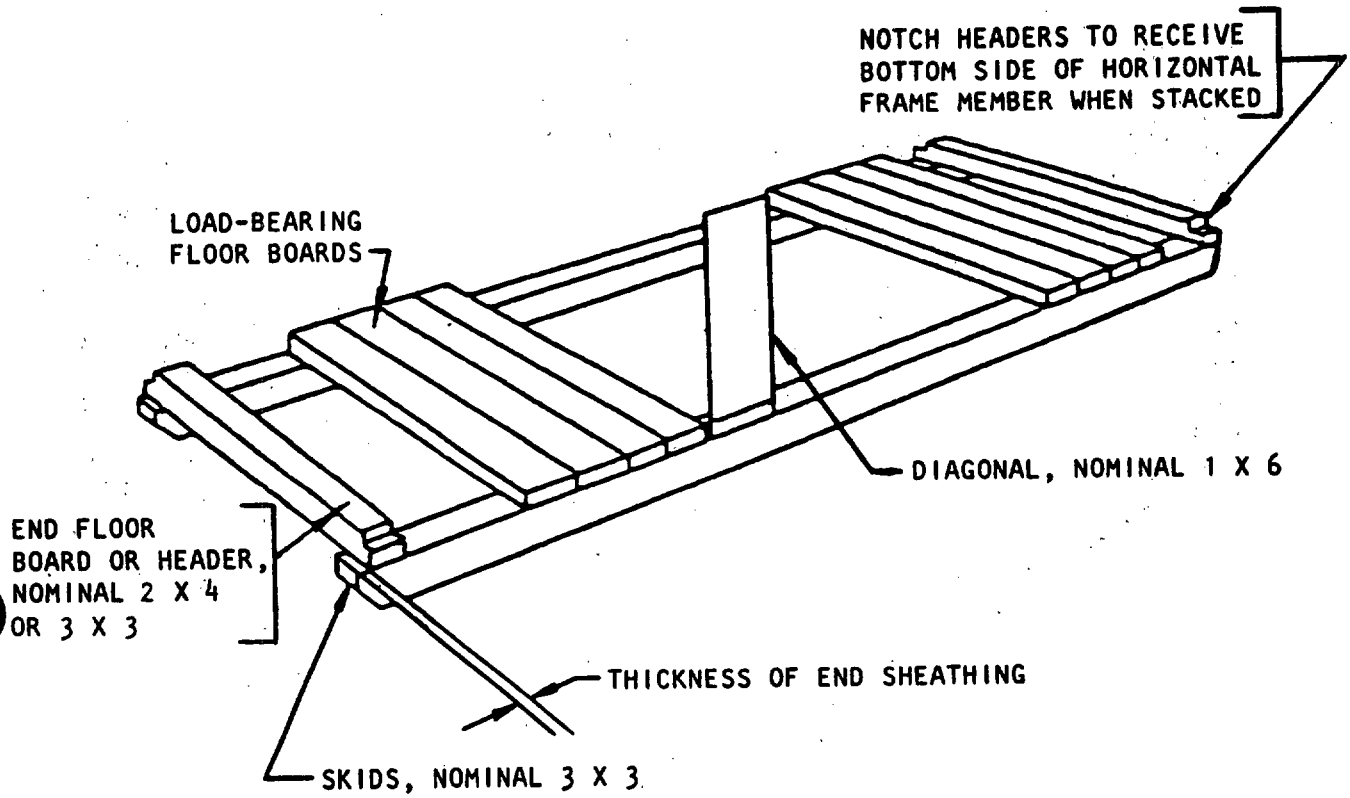

FIGURE 4. Base - type II container.

Downloaded from http://www.everyspec.com

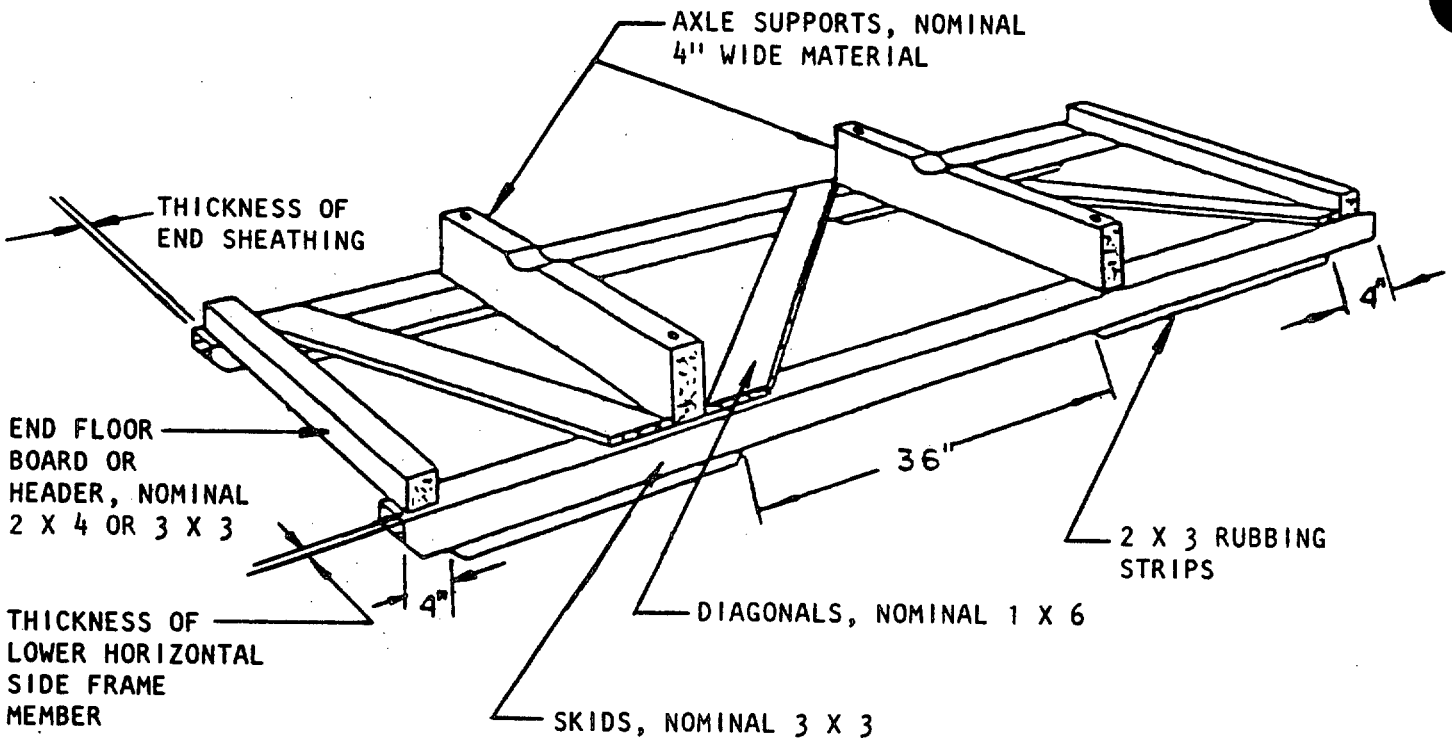

FIGURE 5. Base - type III container for axle assemblies.

Downloaded from http://www.everyspec.com

LENGTH LESS 15 INCHES DIVIDED INTO EQUAL SPACES TO BRING DIAGONALS AT APPROXIMATE RIGHT ANGLES TO EACH OTHER.

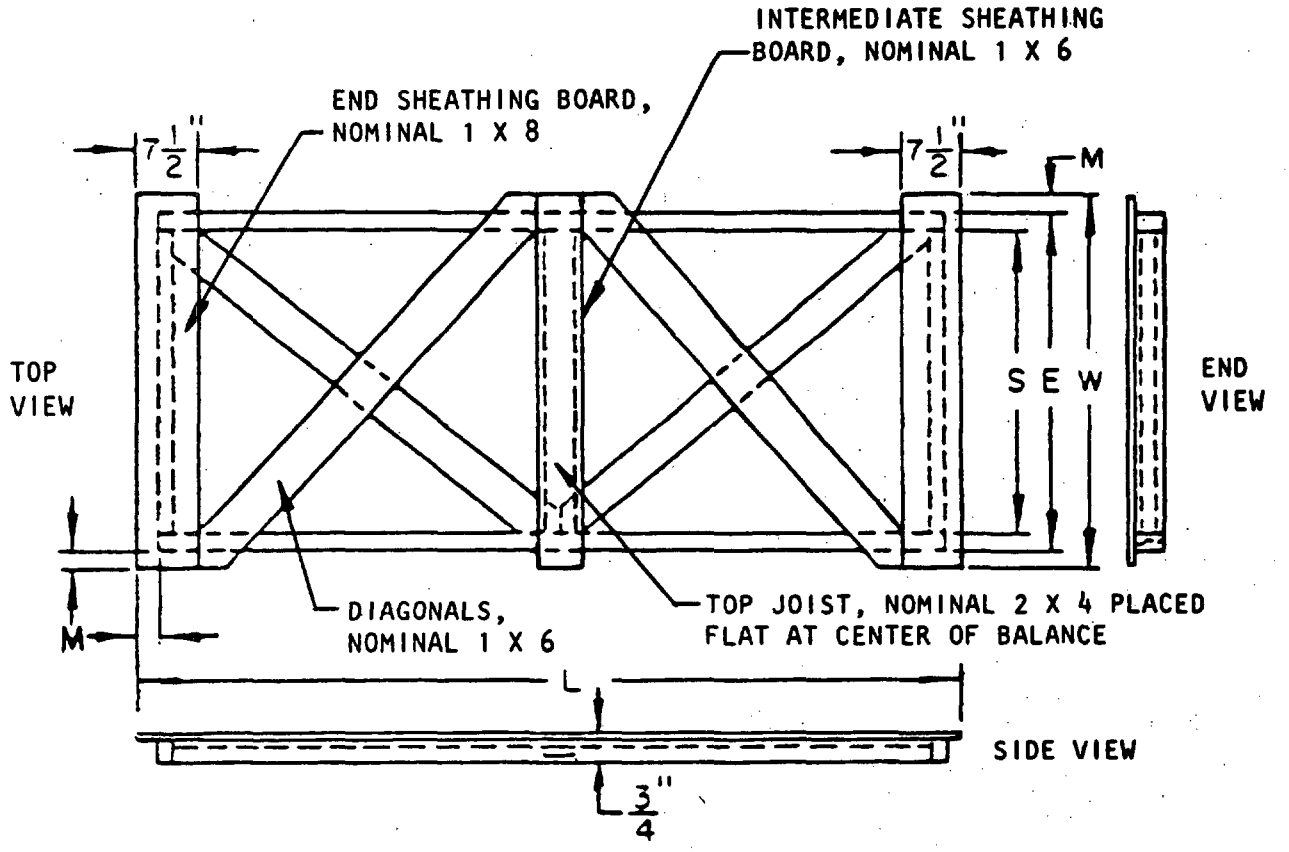

L = Outside length of container less 1/4 inch.

M = Thickness of end or side sheathing plus thickness of top frame member of the end or of the side less 1/8 inch.

W = Outside width of container less 1/4 inch.

E = Outside width of container less thickness of side sheathing and top longitudinal frame member on each side.

S = "E" minus thickness of 2 frame members of top.

FIGURE 6. Container top - type II and type III containers.

Downloaded from http://www.everyspec.com

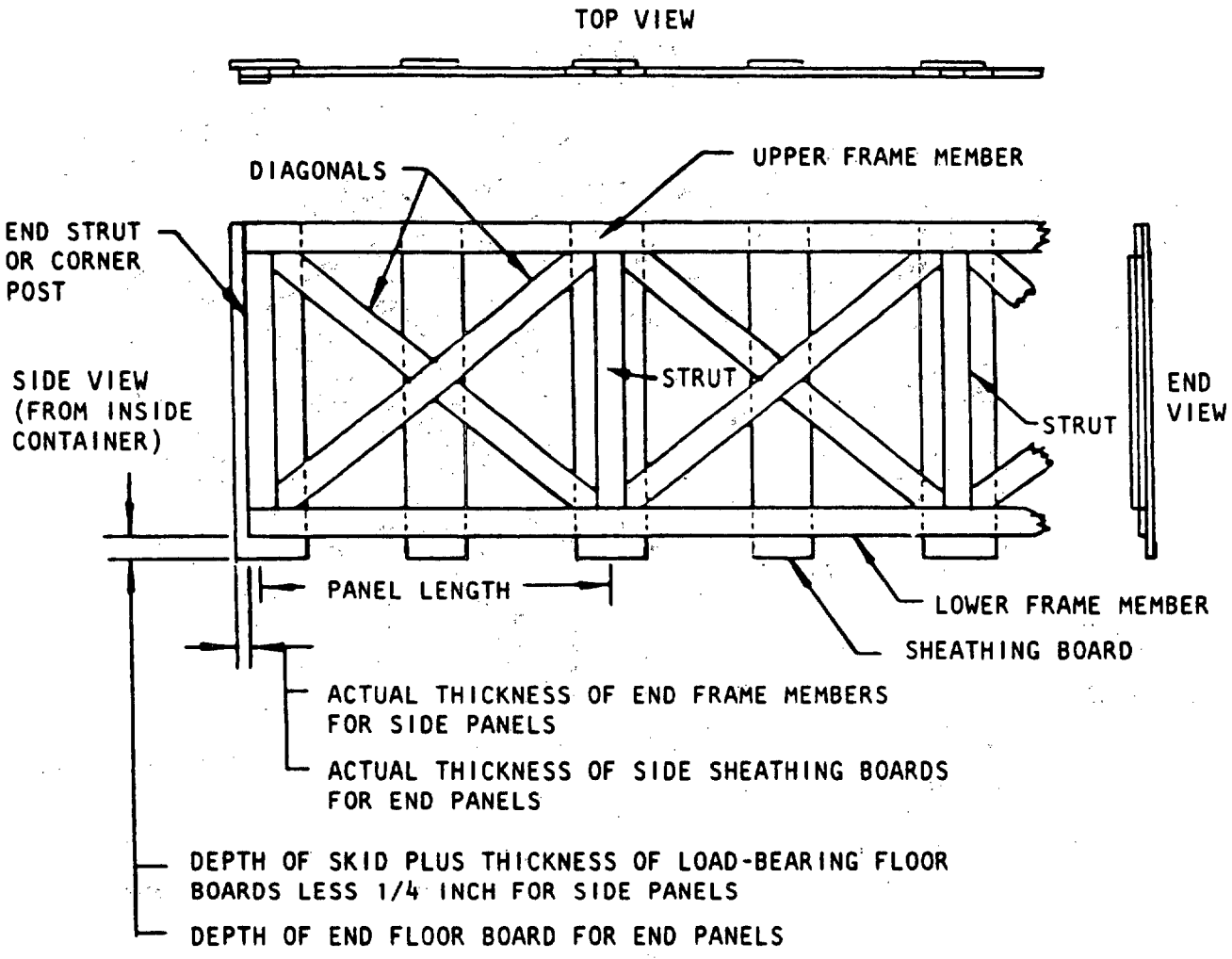

FIGURE 7. Side or end panel of container top - type II and type III containers.

Downloaded from http://www.everyspec.com

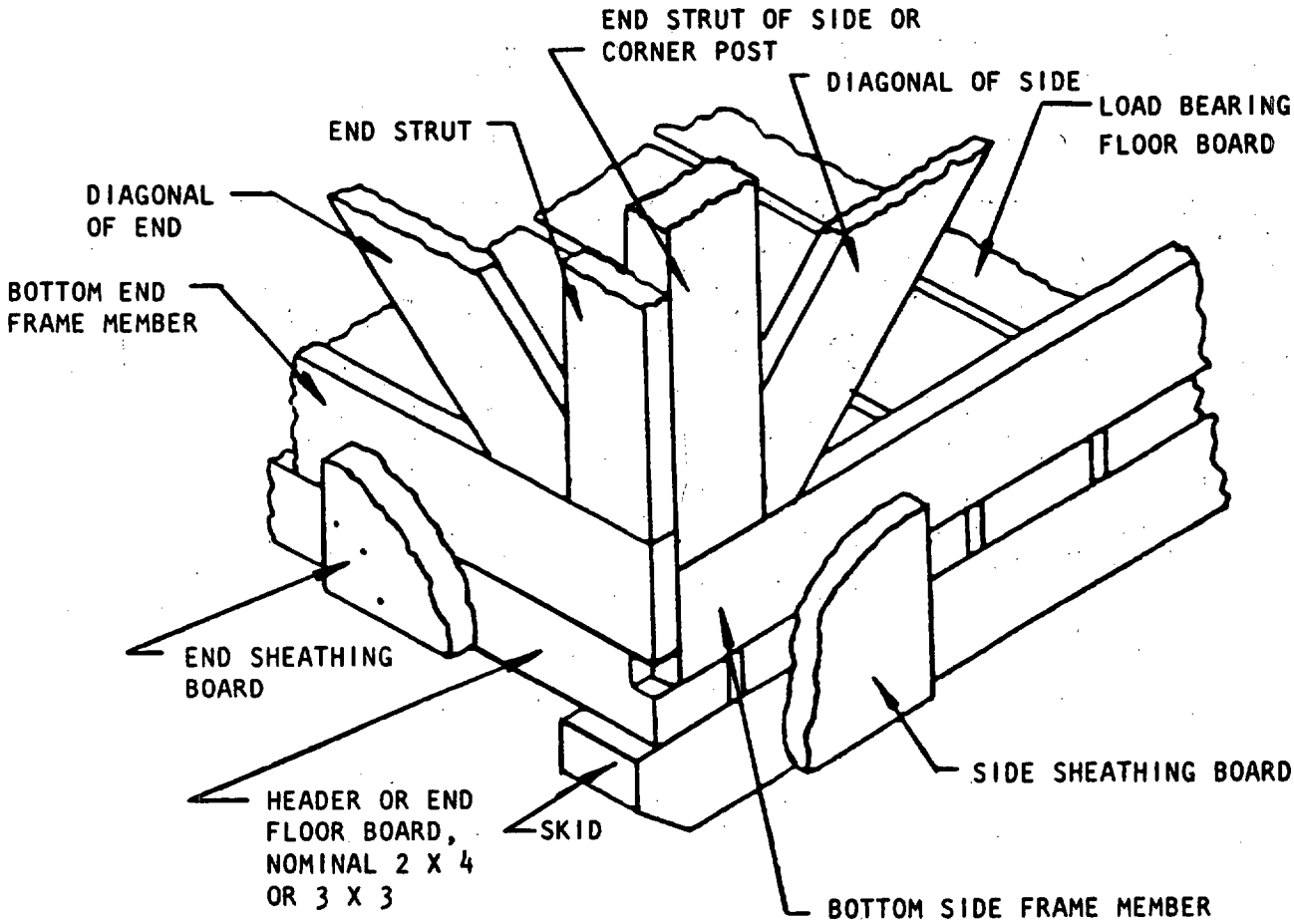

FIGURE 8. Assembly of lower corner of type II containers.

Downloaded from http://www.everyspec.com

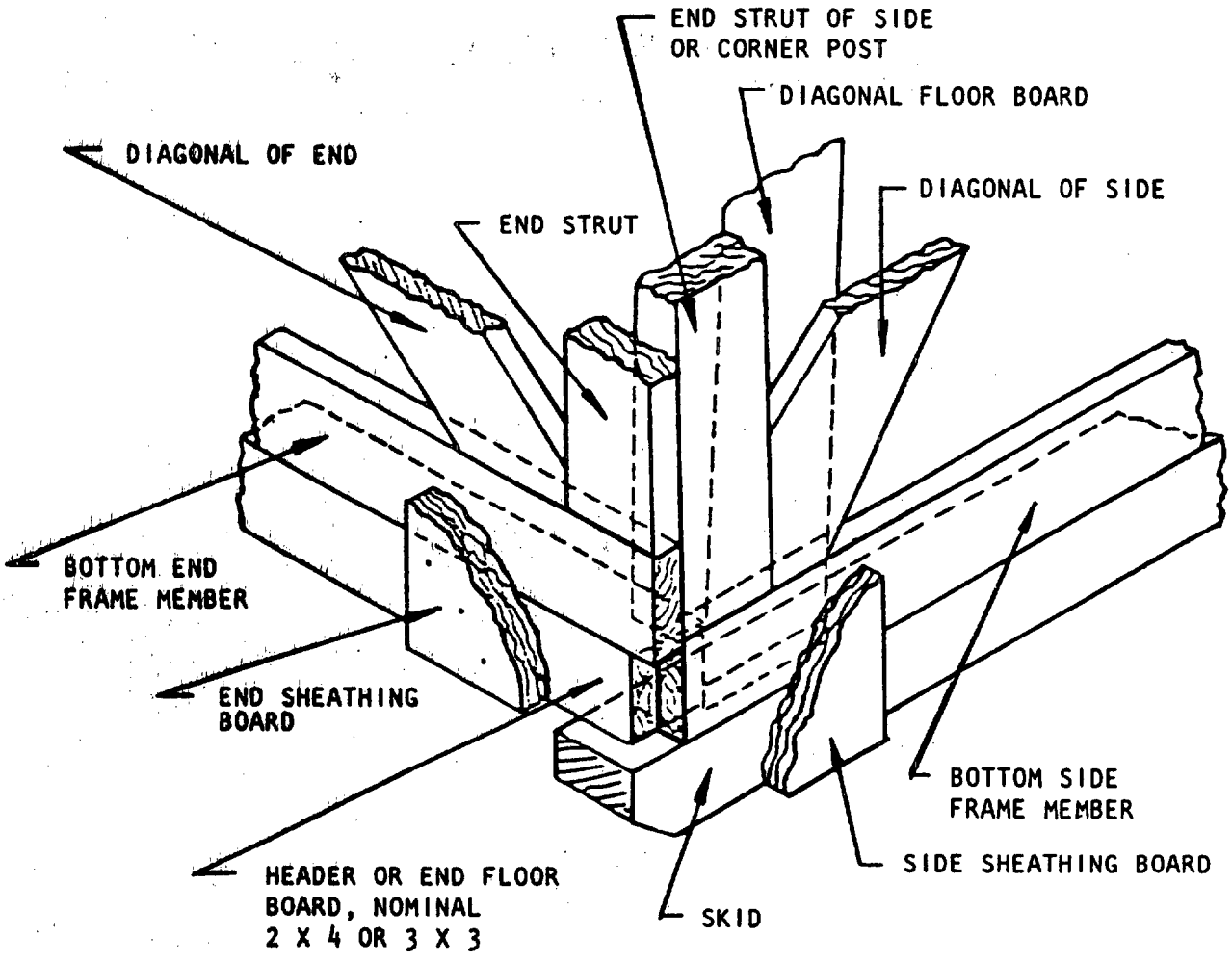

FIGURE 9. Assembly of lower corner of type III containers.

Downloaded from http://www.everyspec.com

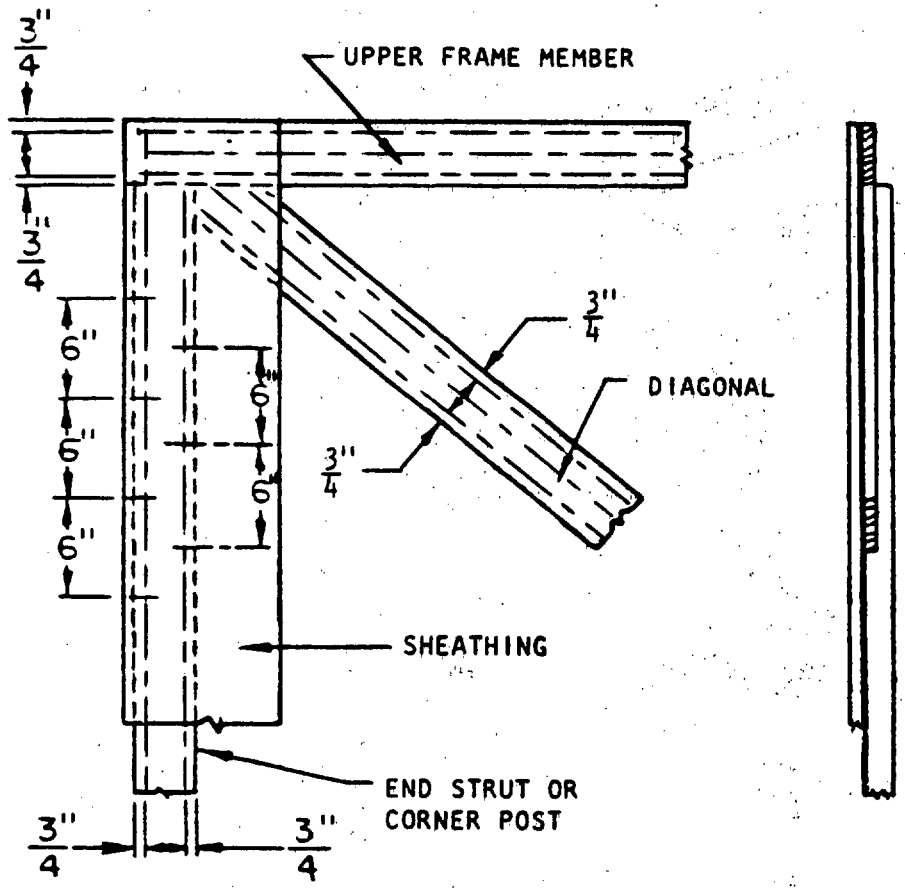

NAIL SHEATHING TO FRAME MEMBERS. ALL NAILS SHALL HAVE A 1/4 INCH MINIMUM CLINCH. OUTSIDE ROW OF NAILS SHALL BE 3/4 INCH FROM EDGE OF FRAME MEMBERS.

FIGURE 10. Sketch showing nail spacing for side and end panels of type II and type III containers.

Downloaded from http://www.everyspec.com

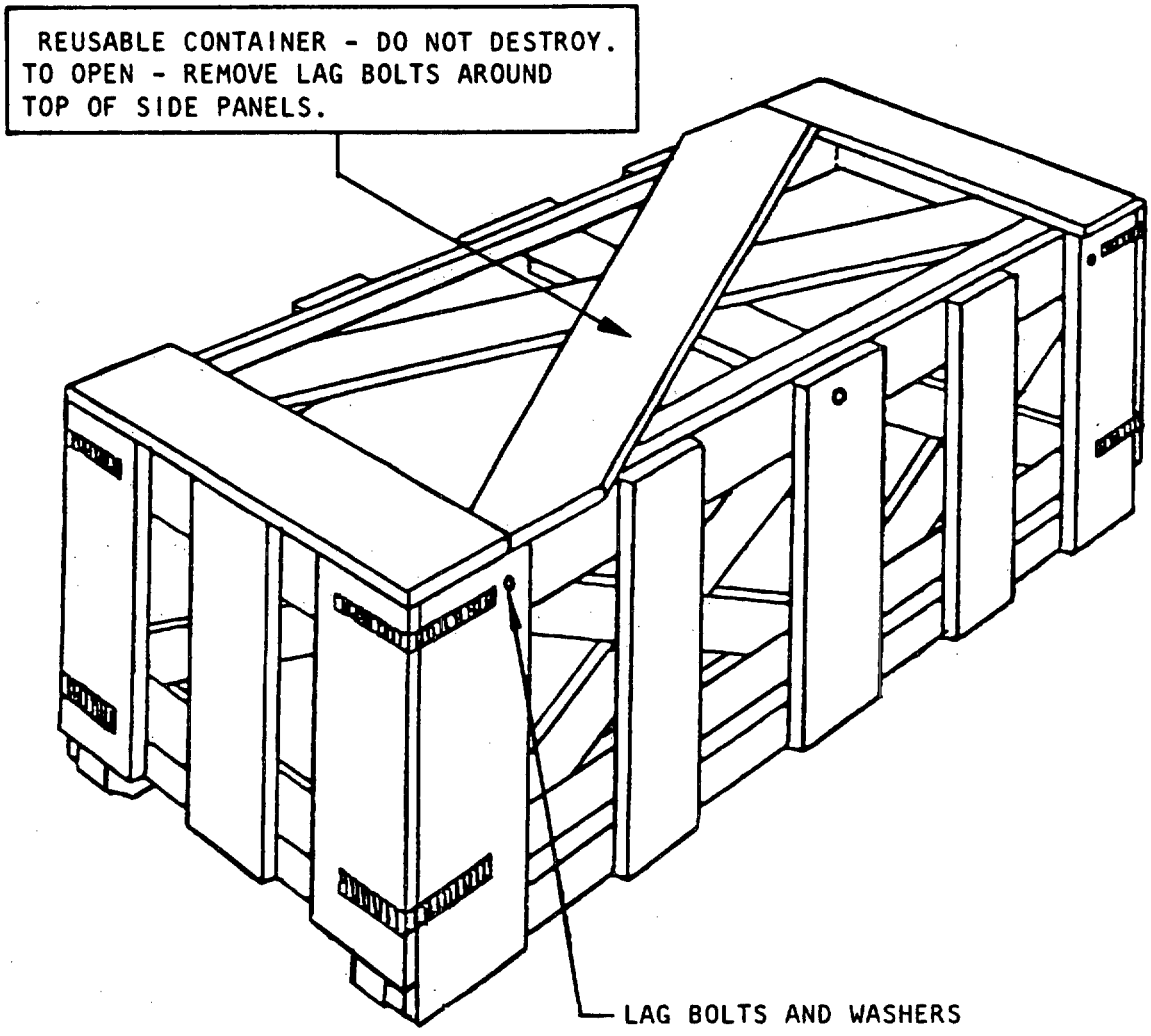

INTERIOR OF CONTAINER
SHALL BE MARKED:

REUSABLE CONTAINER -
DO NOT DESTROY.

FIGURE 11. Marking for type II containers.

Downloaded from http://www.everyspec.com

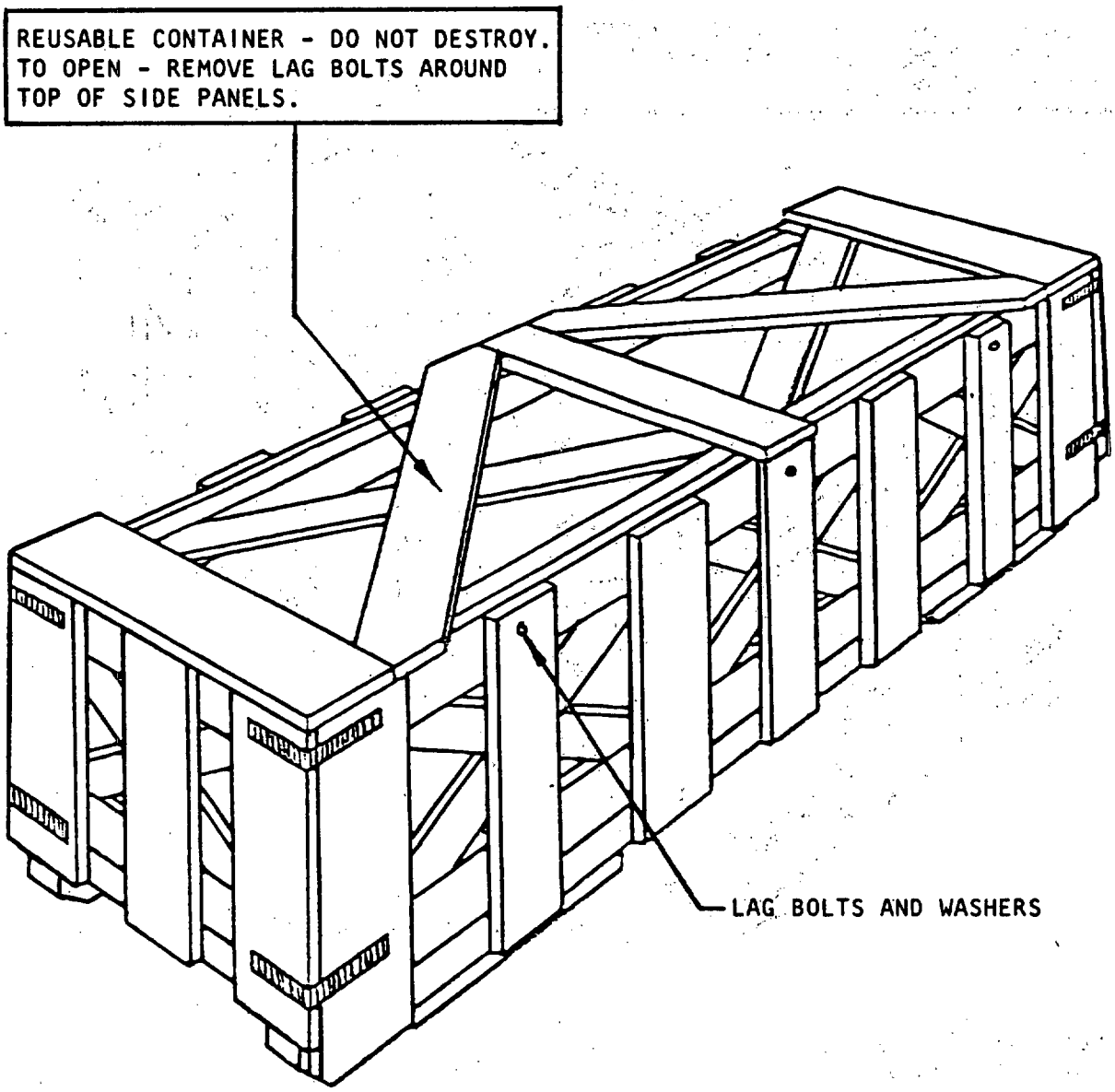

INTERIOR OF CONTAINER
SHALL BE MARKED:

REUSABLE CONTAINER -
DO NOT DESTROY.

FIGURE 12. Marking for type III containers.

Downloaded from http://www.everyspec.com

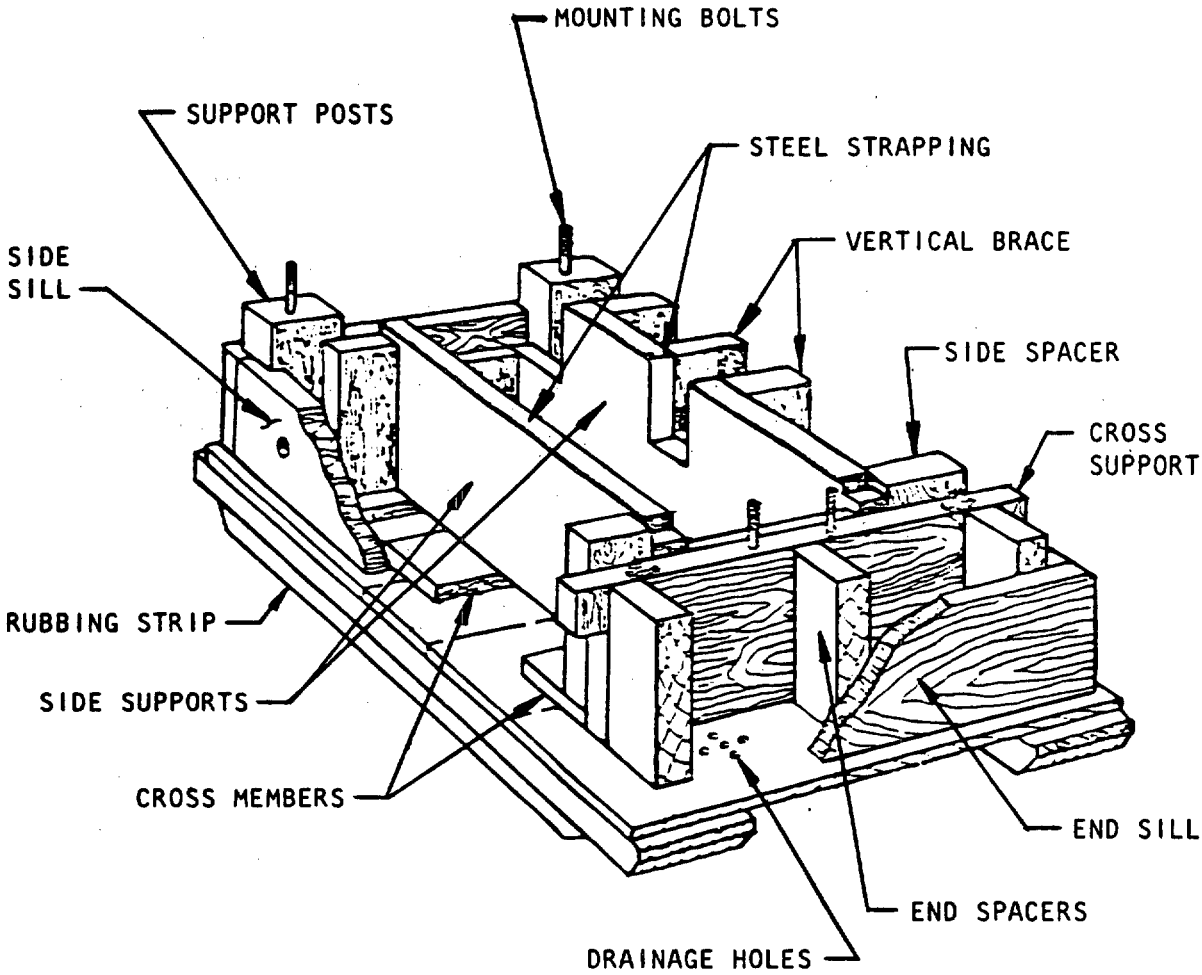

FIGURE 13. Example of type IV and type V container base.

Downloaded from http://www.everyspec.com

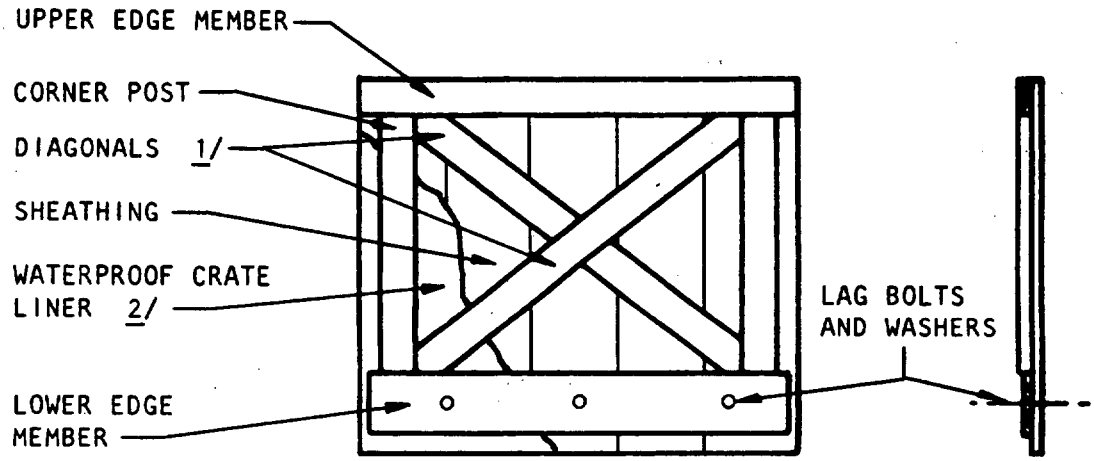

SIDE PANEL

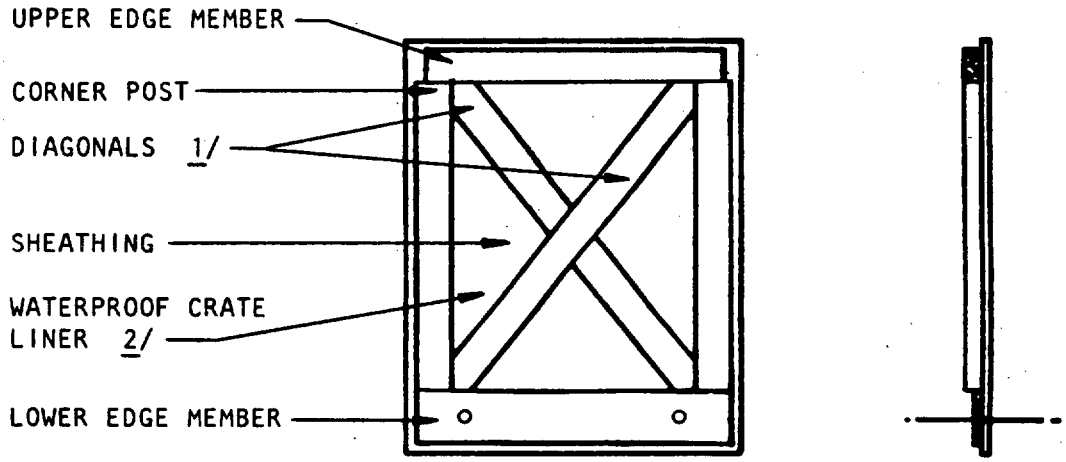

END PANEL

1/ NOT NEEDED WITH PLYWOOD SHEATHING. INSTEAD USE ADDITIONAL STRUTS.

2/ NOT USED WITH PLYWOOD SHEATHING.

NOTE: VIEWS FROM INSIDE CONTAINER.

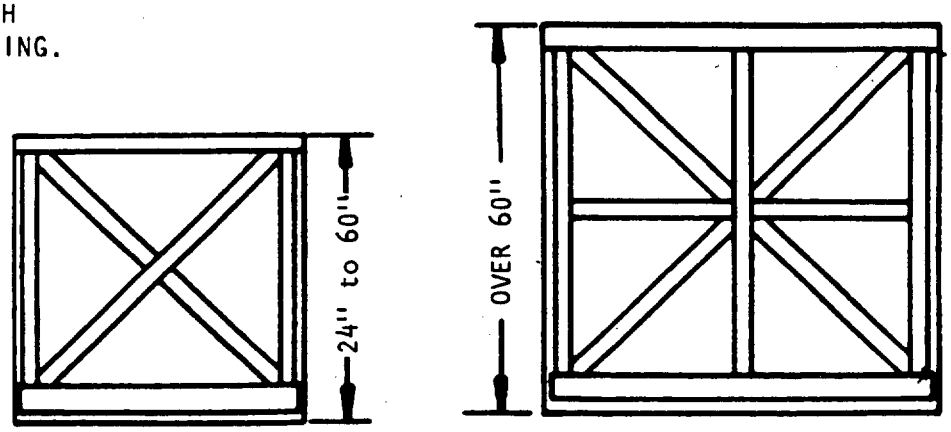

ARRANGEMENT OF DIAGONALS

FIGURE 14. Construction of side and end panels for type IV and type V containers.

Downloaded from http://www.everyspec.com

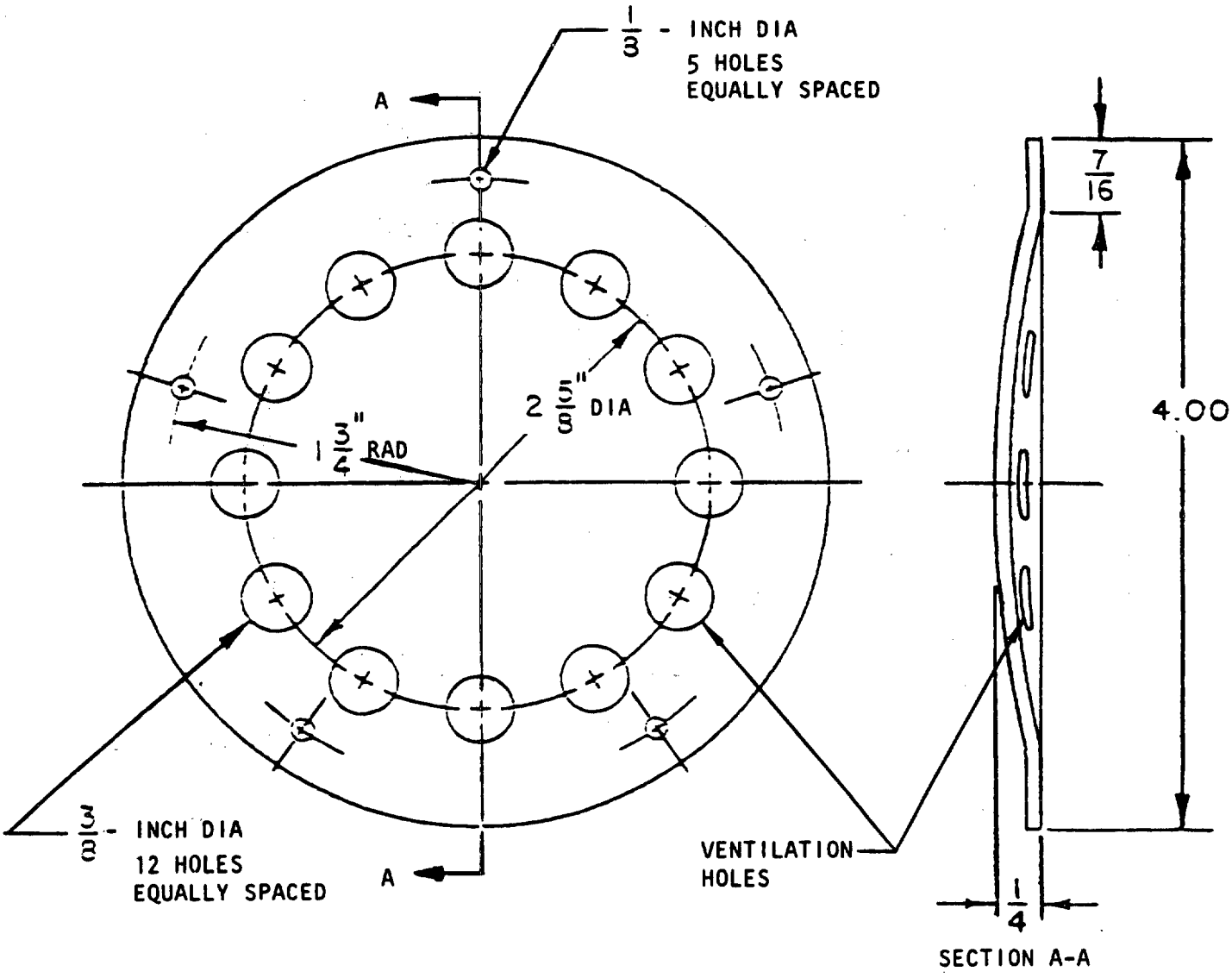

MATERIAL: POLYETHYLENE, TYPE 1, CLASS H, GRADE 2, LP-390, 0.075 ±0.005 - INCH THICK.

FIGURE 15. Ventilator.

Downloaded from http://www.everyspec.com

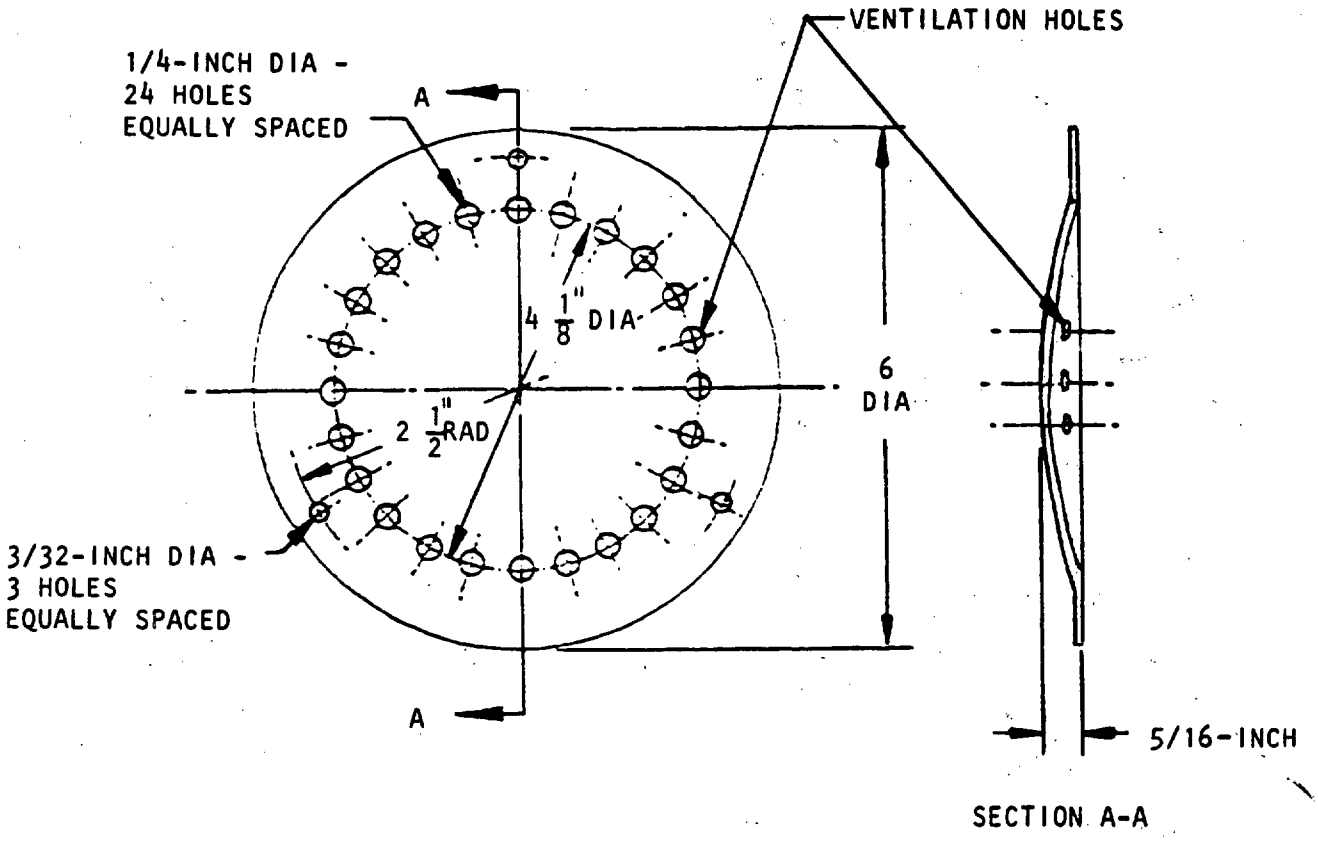

MATERIAL NOTE:

STEEL CARBON
H.R. P & O
.0299 (NO. 22 M.S. GA.) THICK

FINISH NOTE:

PHOSPHATE COATING
TYPE 2, CLASS 1
MIL-P-16232

FIGURE 16. Ventilator.

Downloaded from http://www.everyspec.com

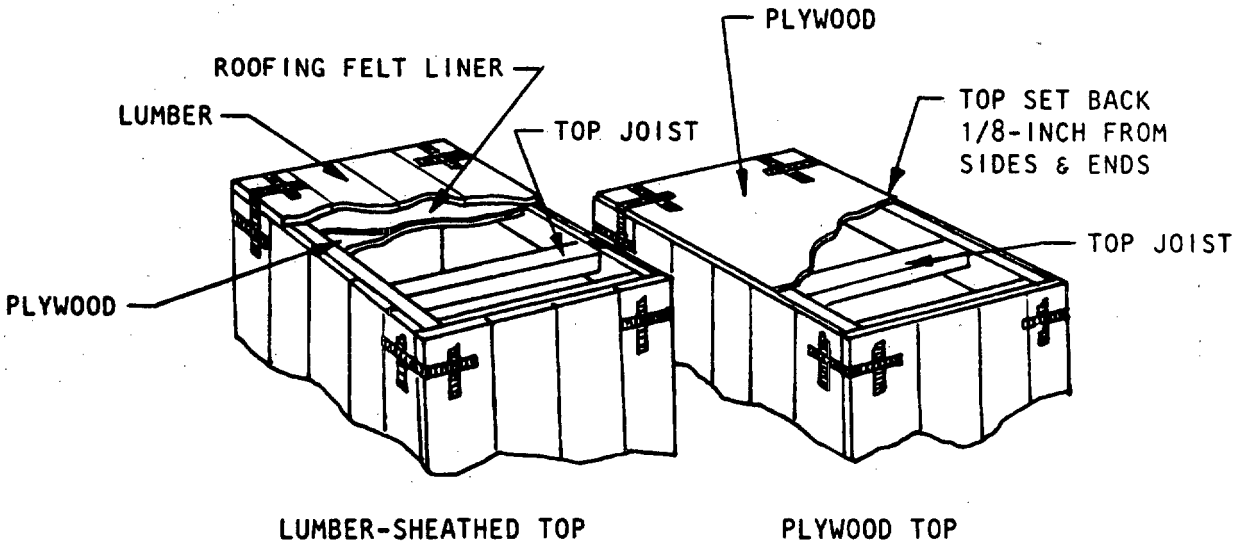

FIGURE 17. Construction of type IV and type V containers.

Downloaded from http://www.everyspec.com

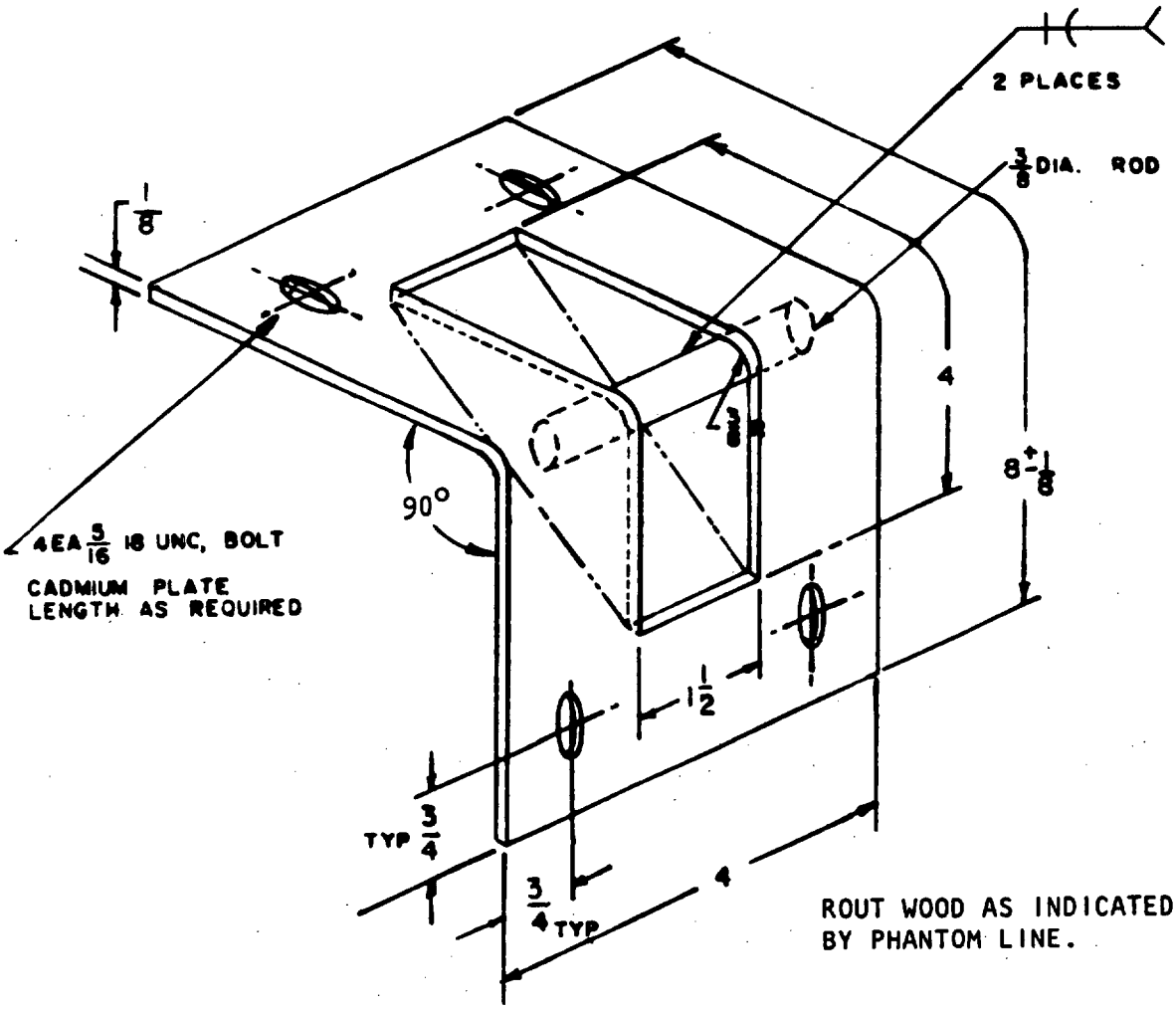

MATERIAL NOTE:

BRACKET - STEEL, SHEET OR STRIP, H.R. P & O

3-INCH ROD - STEEL CARBON, COLD FINISHED, STANDARD QUALITY

WELDING - WELD PER MIL-STD-1261

FIGURE 18. Cover-lifting device, for cover assemblies up to 250 pounds - type II and type III containers.

Downloaded from http://www.everyspec.com

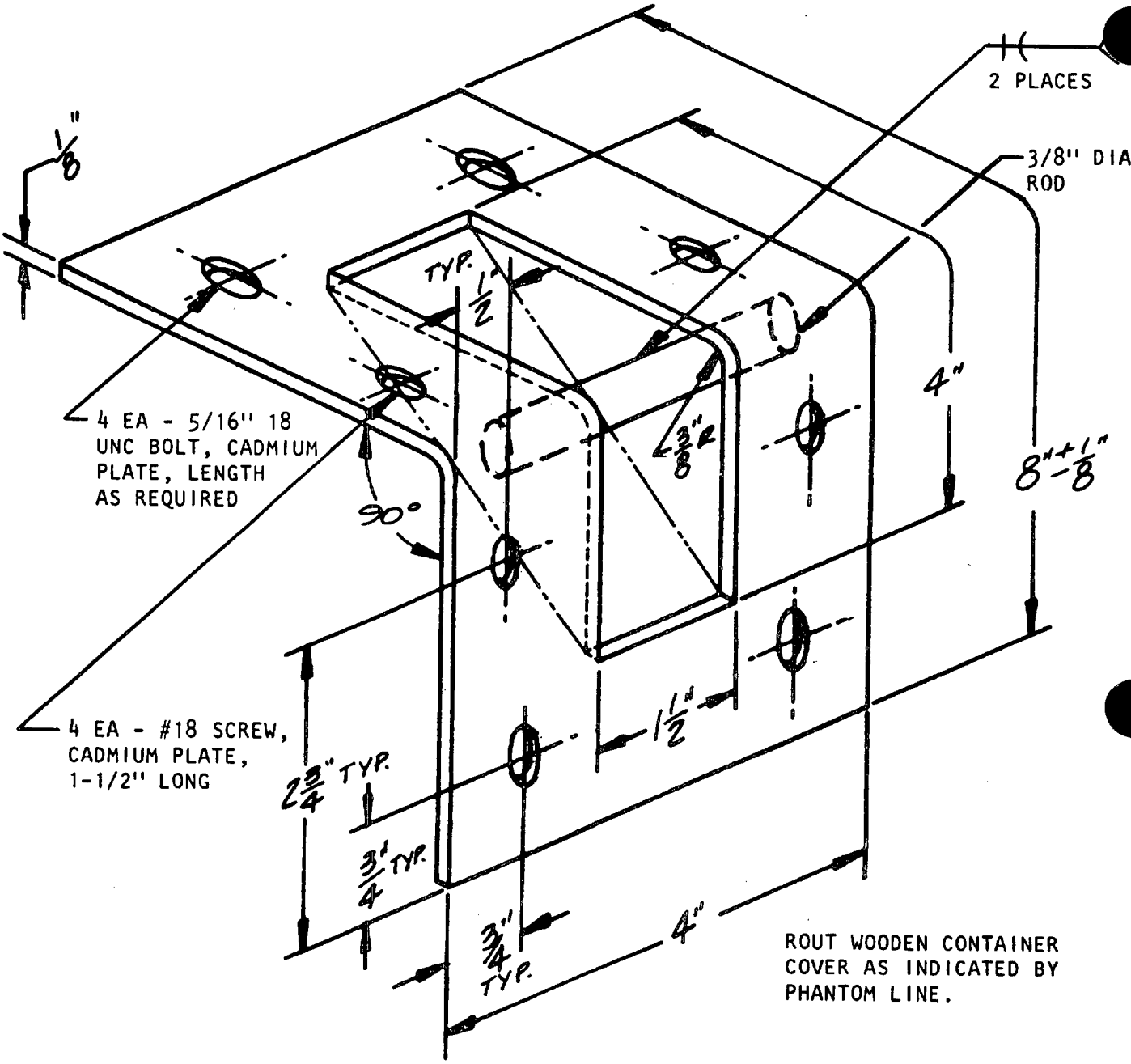

MATERIAL NOTE:

BRACKET - STEEL, SHEET OR STRIP, H.R. P&O

3-INCH ROD - STEEL, CARBON, COLD-FINISHED, STANDARD QUALITY

WELDING - WELD PER MIL-STD-1261

FIGURE 19. Cover-lifting device, for cover assemblies over 250 pounds - type IV and type V containers.

Downloaded from http://www.everyspec.com

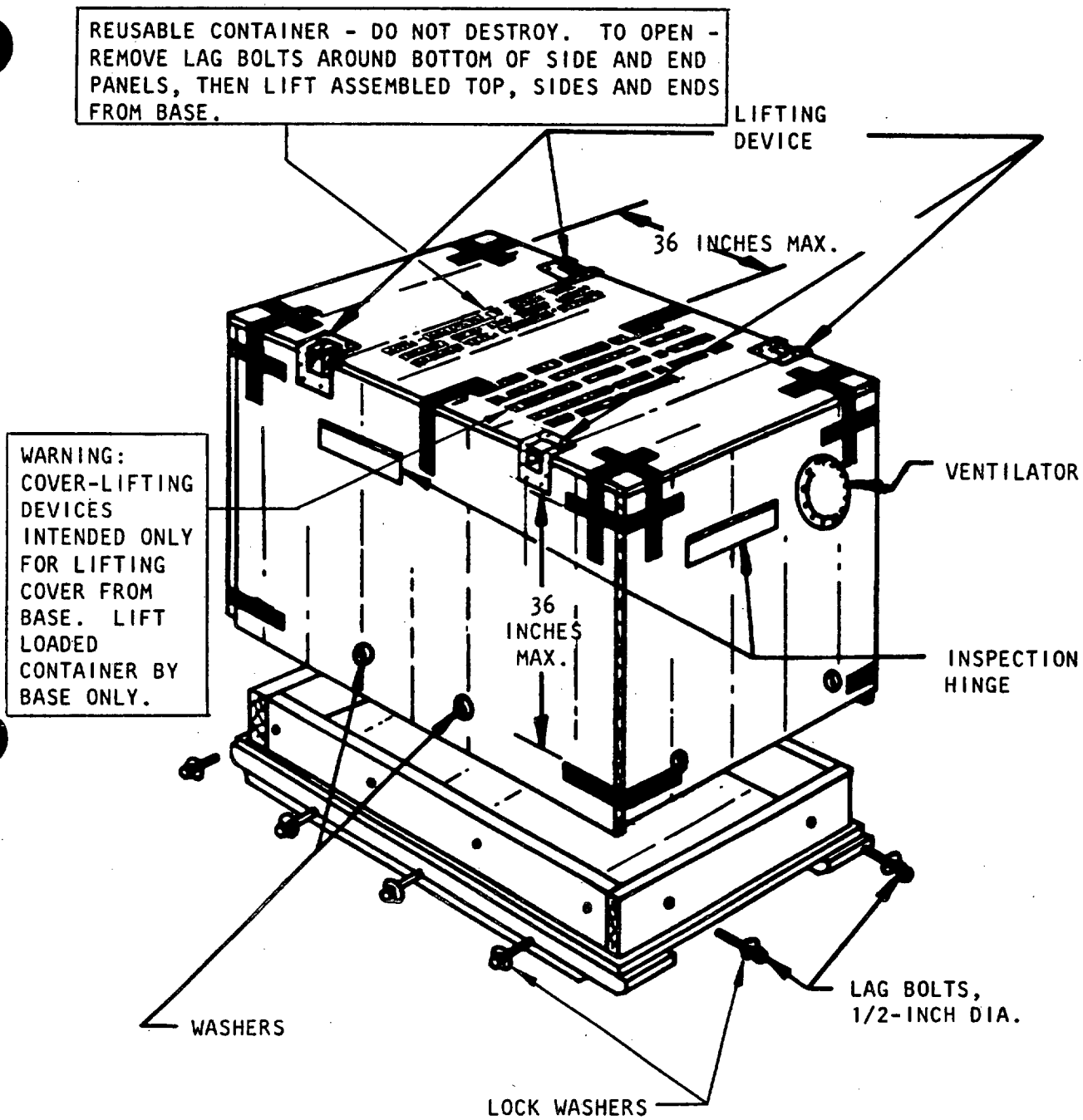

INTERIOR OF CONTAINER SHALL BE MARKED:

REUSABLE CONTAINER - DO NOT DESTROY.

FIGURE 20. Assembling cover and base - type IV and type V containers.

Downloaded from http://www.everyspec.com

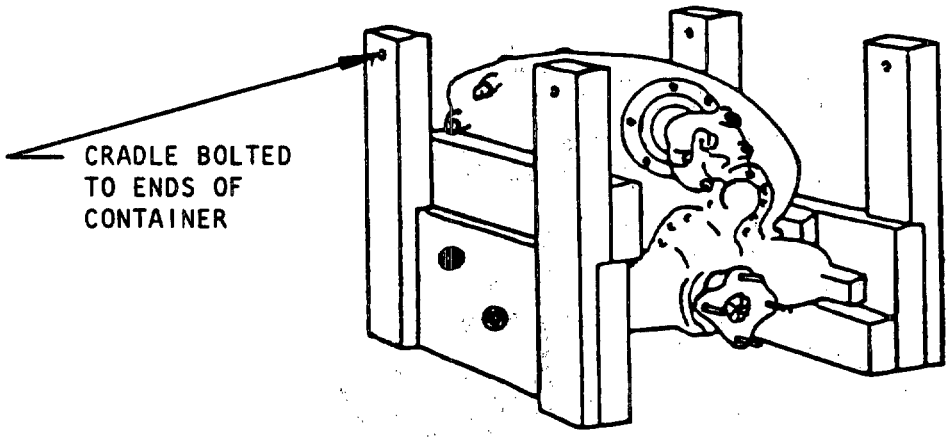

A - UNIT BOLTED TO REMOVABLE CRADLE

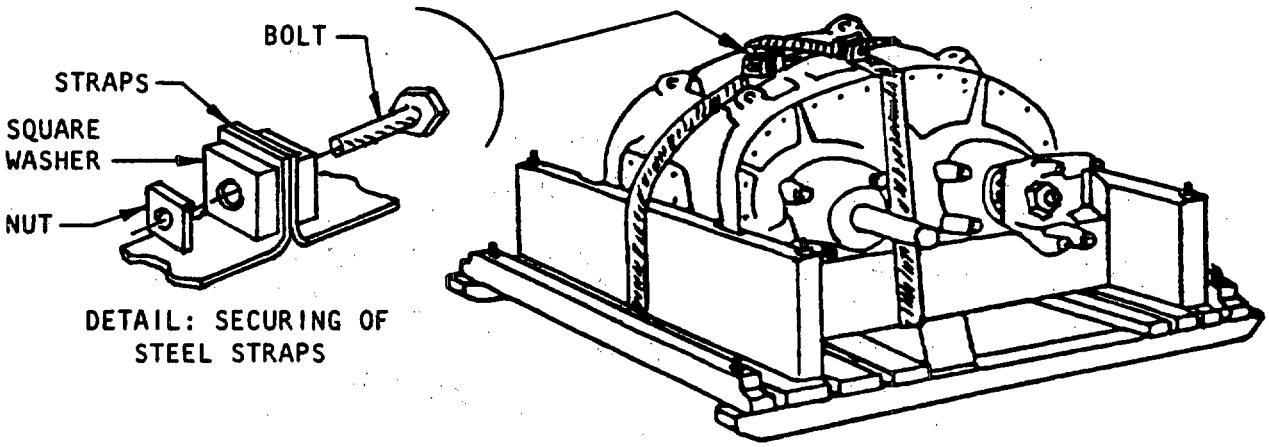

B - UNIT HELD IN POSITION WITH STEEL STRAPS

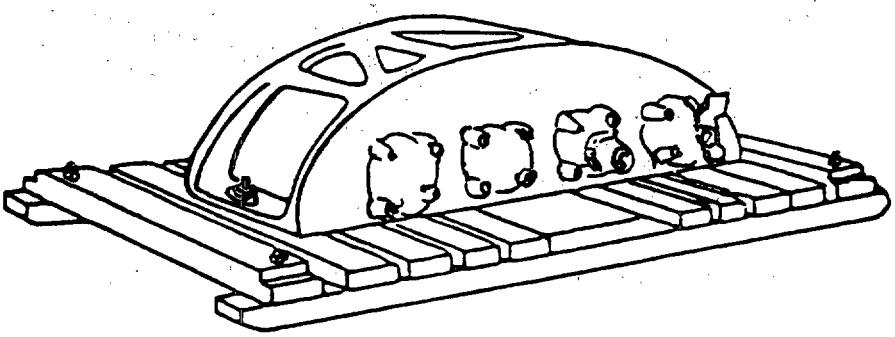

C - UNIT BOLTED TO BOTTOM OF CONTAINER

FIGURE 21. Typical methods of securing items in type I and type II containers.

Downloaded from http://www.everyspec.com

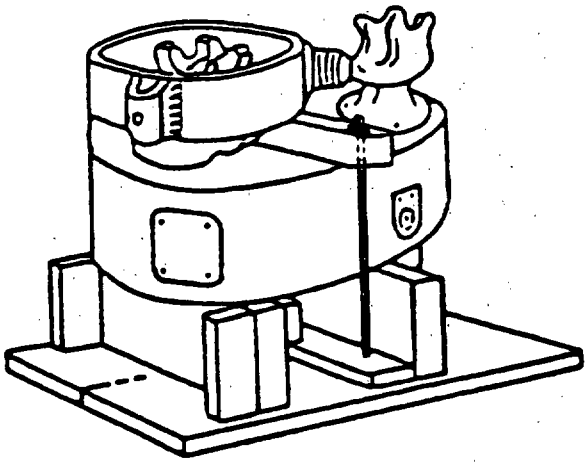

A - HOLD-DOWN BRACE BOLTED TO BOTTOM OF CONTAINER

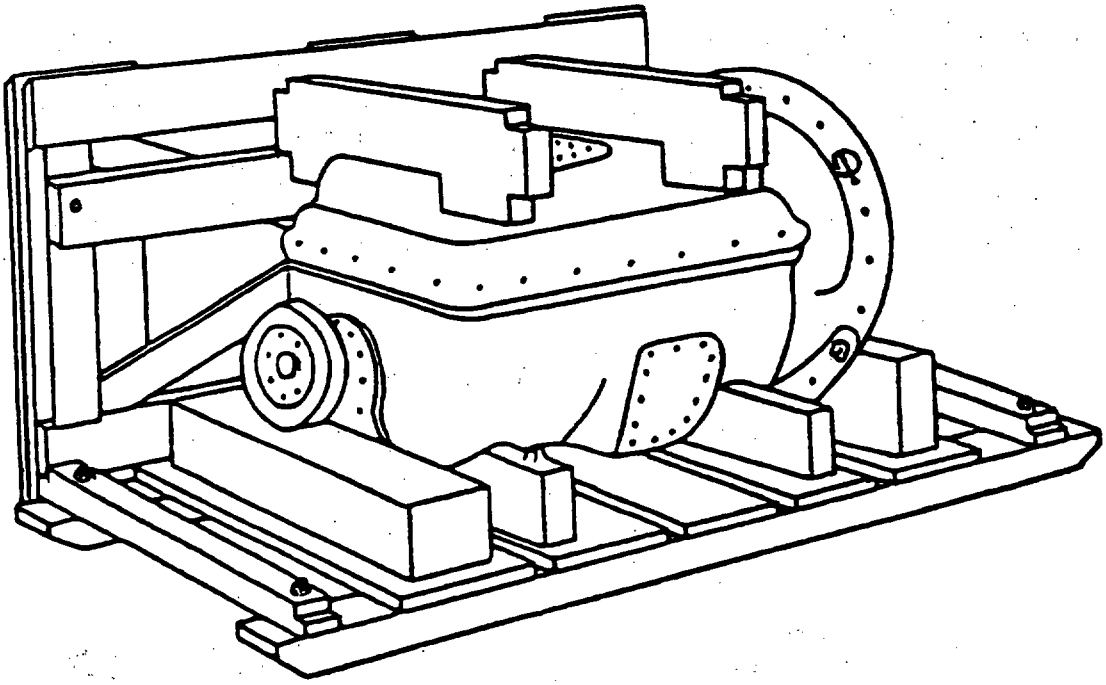

B - HOLD-DOWN BRACE BOLTED TO SIDE OF CONTAINER

FIGURE 22. Typical methods of securing items in type I and type II containers.

Downloaded from http://www.everyspec.com

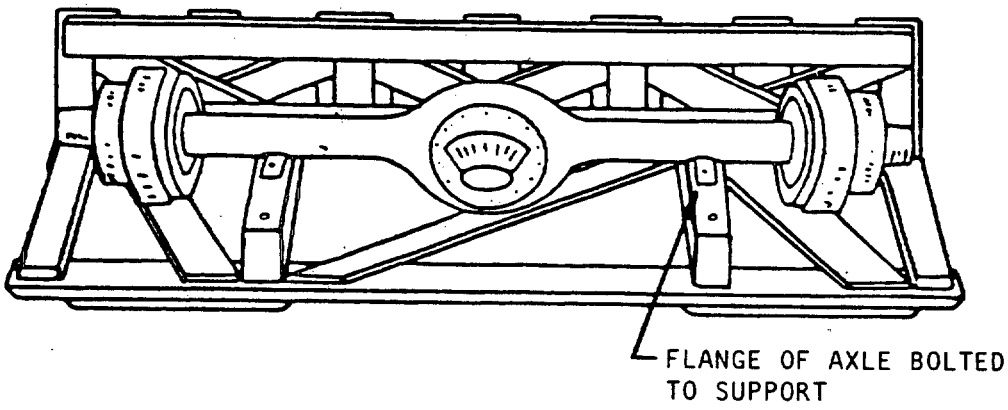

A - DIRECT BOLTING

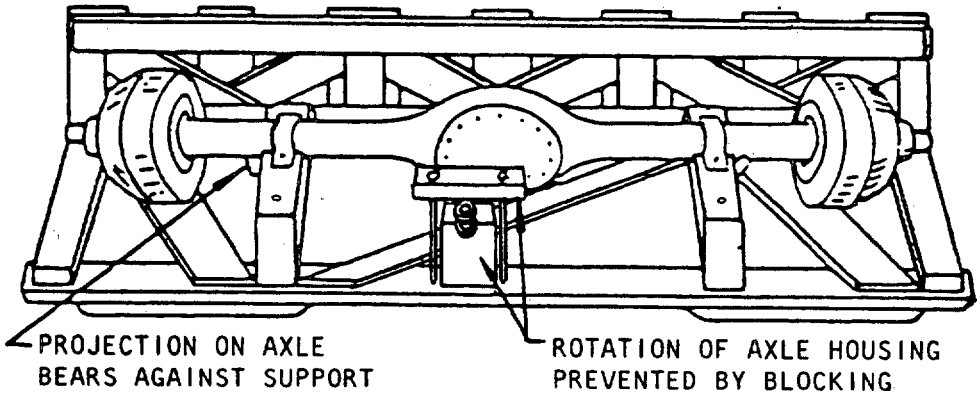

B - HOLD-DOWN IRONS

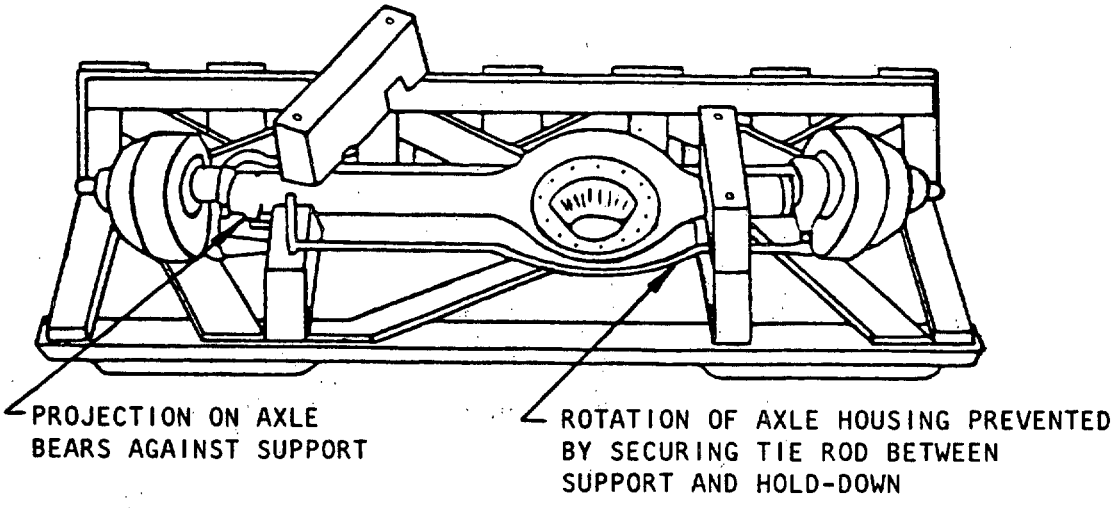

C - HOLD-DOWN BRACES

FIGURE 23. Typical methods of securing axles in type III containers.

Downloaded from http://www.everyspec.com

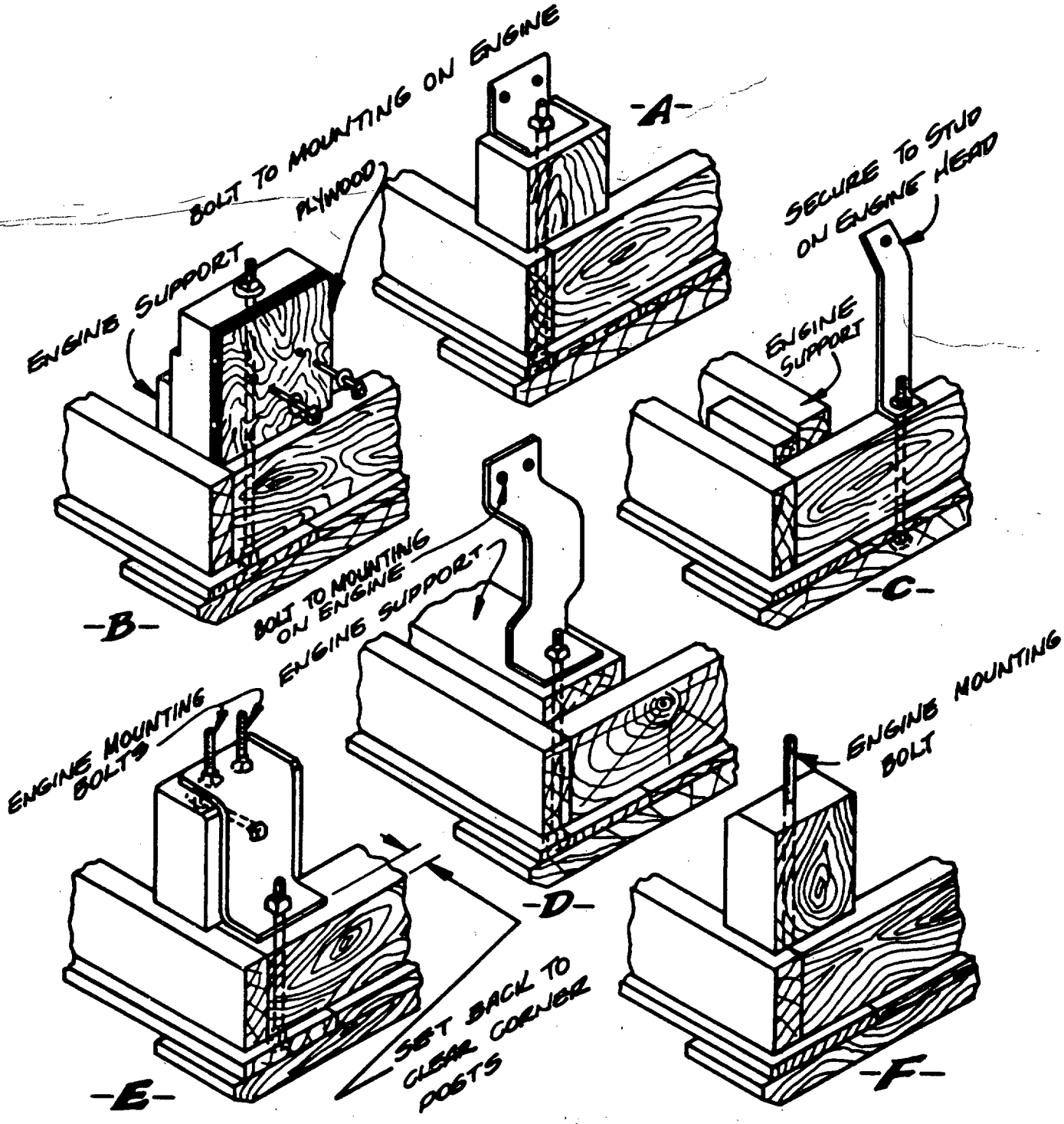

FIGURE 24. Typical holddowns for type IV and type V containers.

Downloaded from http://www.everyspec.com

STANDARDIZATION DOCUMENT IMPROVEMENT PROPOSAL

(See Instructions – Reverse Side)

1. DOCUMENT NUMBER

2. DOCUMENT TITLE

3a. NAME OF SUBMITTING ORGANIZATION

b. ADDRESS *(Street, City, State, ZIP Code)*

4. TYPE OF ORGANIZATION *(Mark one)*

- ☐ VENDOR
- ☐ USER
- ☐ MANUFACTURER
- ☐ OTHER *(Specify)*: _____

5. PROBLEM AREAS

a. Paragraph Number and Wording:

b. Recommended Wording:

c. Reason/Rationale for Recommendation:

6. REMARKS

7a. NAME OF SUBMITTER *(Last, First, MI)* – Optional

b. WORK TELEPHONE NUMBER *(Include Area Code)* – Optional

c. MAILING ADDRESS *(Street, City, State, ZIP Code)* – Optional

8. DATE OF SUBMISSION *(YYMMDD)*

(TO DETACH THIS FORM, CUT ALONG THIS LINE.)

DD FORM 82 MAR 1426

PREVIOUS EDITION IS OBSOLETE.