Downloaded from http://www.everyspec.com

MIL-C-104B
29 January 1980
SUPERSEDING
MIL-C-104A
30 April 1957

MILITARY SPECIFICATION

CRATES, WOOD; LUMBER AND PLYWOOD

SHEATHED, NAILED AND BOLTED

This specification is approved for use by all Departments and Agencies of the Department of Defense.

1. SCOPE

1.1 Scope. This specification covers requirements for two types and two classes of sheathed crates each of which may have two styles of bases. The crates are designed for net loads not exceeding 30,000 pounds and to withstand the most severe overseas shipping and storage conditions.

1.2 Classification. Crates shall be of the following types, classes, and styles, as specified (see 6.2):

Type I	- Nailed
Type II	- Bolted
Class 1	- Lumber sheathed
Class 2	- Plywood sheathed
Style a	- Skid base
Style b	- Sill base

FSC 8115

Beneficial comments (recommendations, additions, deletions) and any pertinent data which may be of use in improving this document should be addressed to: US Army Mobility Equipment Research and Development Command, ATTN: DRDME-DS, Fort Belvoir, VA 22060 by using the self-addressed Standardization Document Improvement Proposal (DD Form 1426) appearing at the end of this document or by letter.

Downloaded from http://www.everyspec.com

2. APPLICABLE DOCUMENTS

2.1 Issues of documents. The following documents of the issue in effect on date of invitation for bids or request for proposal, form a part of this specification to the extent specified herein:

SPECIFICATIONS

FEDERAL

FF-B-561	- Bolt, (Screw), Lag.
FF-B-584	- Bolt, Finned Neck, Key Head, Machine, Ribbed Neck, Square Neck, Tee Head.
FF-N-105	- Nail, Brads, Staples and Spikes, Wire, Cut and Wrought.
FF-N-836	- Nut, Square, Hexagon, Cap, Slotted, Castellated, Clinch, Knurled and Welding.
FF-W-92	- Washer, Metal, Flat (Plain).
NN-P-530	- Plywood, Flat Panel.
QQ-S-781	- Strapping, Steel, and Seals.
SS-R-501	- Roofing Felt, Asphalt Prepared, Smooth Surfaced.
PPP-B-1055	- Barrier Materials, Waterproofed Flexible.

STANDARDS

MILITARY

MIL-STD-105	- Sampling Procedures and Tables for Inspection by Attributes.
MIL-STD-129	- Marking for Shipment and Storage.
MIL-STD-731	- Quality of Wood Members for Containers and Pallets.
MIL-STD-1188	- Commercial Packaging of Supplies and Equipment.
MIL-STD-1363	- Measurement of Wood Moisture Content.

Downloaded from http://www.everyspec.com

(Copies of specifications and standards required by contractors in connection with specific procurement functions should be obtained from the procuring activity or as directed by the contracting officer.)

2.2 Other publications. The following documents form a part of this specification to the extent specified herein. Unless otherwise indicated, the issue in effect on date of invitation for bids or request for proposal shall apply.

U. S. DEPARTMENT OF COMMERCE

Product Standard

PS 1	- Softwood Plywood, Constuction and Industrial.
PS 51	- Hardwood and Decorative Plywood.

(Application for copies should be addressed to the Superintendent of Documents, U. S. Government Printing Office, Washington, D.C. 20402.)

3. REQUIREMENTS

3.1 Description. The various types, classes, and styles of crates shall be as specified herein and as shown in figures 1 through 33.

3.2 First article (preproduction model). When specified (see 6.2), the contractor shall furnish one complete crate for examination within the time frame specified (see 6.2), to prove that his production methods will produce crates that comply with the requirements of this specification. Examination shall be as specified in Section 4 and shall be subject to surveillance and approval by the Government (see 6.3).

3.3 General requirements.

3.3.1 Loading of crates. When crates are furnished as filled containers, the extent of disassembly of the contents, and the anchoring, blocking and bracing, and application of lifting straps shall be in accordance with the appendix to this specification.

Downloaded from http://www.everyspec.com

3.3.2 Weight limitations. The gross weight of crates shall not exceed 20,000 pounds, whenever possible. When this limitation is not practical, gross weight of crates with skid type bases (Style a) may go to 30,000 pounds.

3.3.3 Dimension limitations. The exterior dimensions of the crate shall not exceed the following limitations, unless specified (see 6.2), for overseas shipment for which dimensions of the International Loading Gauge shall apply, figure 39.

Length	--------- 30 feet
Width	--------- 9 feet
Height	--------- 10 feet

3.3.4 Interior clearance. A clearance of not less than 1 inch shall be allowed between the item and the closest member of the sides, ends, and top of the crate. Fragile items or items within floating bag barriers shall be protected with clearances of not less than 2 inches. Additional clearances may be provided for shock mounted items. Protruding parts at the top may be allowed to extend between joists; spacing of joists may be adjusted slightly to accomodate projections.

3.3.5 Material. Material shall be as specified herein. Materials not specified shall be selected by the contractor and shall be subject to all provisions of this specification (see 6.7).

3.3.5.1 Lumber. Lumber components shall conform to the quality and structural classification requirements of MIL-STD-731. Sizes of all lumber specified herein shall be nominal as specified in MIL-STD-731, and shall be the minimum acceptable sizes for lumber components.

3.3.5.2 Plywood. Plywood shall conform to NN-P-530, Group A or B. Softwood plywood (Group B) shall comply with PS-1, Grade C-D interior with exterior glue. Hardwood plywood (Group A) shall comply with PS-51, Grade 3-4, Type I.

3.3.5.3 Nails and staples. Nails and staples shall be steel and shall conform to FF-N-105.

3.3.5.4 Bolts, nuts, and washers. Bolts shall conform to FF-B-584, Type I, Class 1, Style A. Nuts shall conform to FF-N-836, Type I or II, Style 1 or 4. Washers shall conform to FF-W-92, Type A, Grade I, Class A.

3.3.5.4.1 Lag bolts. Lag bolts shall conform to FF-B-561, Type I, Grade B.

Downloaded from http://www.everyspec.com

3.3.5.5 Strapping. Strapping shall conform to QQ-S-781, Class 1, Type I, II, or IV as applicable. Strapping shall be finish A or B, as specified herein.

3.3.5.6 Barrier material. Barrier material, for crate liners, shall conform to PPP-B-1055, class as appropriate for crate liners.

3.3.5.7 Roofing felt. Roofing felt for crate tops shall conform to SS-R-501, 45-pound minimum weight.

3.3.6 Construction.

3.3.6.1 Nailing procedure. Nails used shall be sinkers, coolers, corkers, or common. Nail sizes specified for the fabrication of the various crates are based on Groups I and II woods. When Group III or IV woods are used, nail sizes may be one penny size smaller than those specified. The patterns to be used for the nailing of two flat pieces of lumber shall conform to the details shown in figure 1 or as specified herein. Unless otherwise specified herein, the following requirements shall determine size, placement, and quantity of nails:

(a) All adjacent crate members shall be securely fastened to each other, either directly or by means of the covering.
(b) All nails that are not to be clinched shall be cement coated.
(c) Nails shall be driven through the thinner member into the thicker member wherever possible.
(d) Nails for fastening plywood to framing shall be clinched at least 1/4 inch. Heads of nails shall always be on the plywood side.
(e) When the flat faces of pieces of lumber are nailed together and the combined thickness is 3 inches or less (except for top joists and covering material), nails shall be long enough to pass through both thicknesses and shall be clinched not less than 1/4 inch or more than 3/8 inch.
(f) When the flat faces of pieces of lumber are nailed together and the combined thickness is more than 3 inches or when the flat face of one or more pieces is nailed to the edge or end face of another, nails shall not be clinched. The portion of the nail in the thicker piece shall be not less than 2 times the length of the nail in the thinner piece for tenpenny nails and smaller, and not less than 1-1/2 inches for twelvepenny nails and larger.

Downloaded from http://www.everyspec.com

(g) When splitting occurs with the use of diamond-point nails, the nails shall be slightly blunted. When blunting does not prevent the splitting, holes slightly smaller than the diameter of the nail shall be drilled for each nail.

(h) Nails shall be driven so that neither the head nor the point projects above the surface of the wood. Occasional over-driving will be permitted, but nails shall not be over-driven more than one-eighth the thickness of the piece holding the head.

(i) Nails shall be positioned not less than the thickness of the piece from the end nor less than one-half the thickness of the piece from the side edge of the lumber whenever possible. Nails driven into the side edge of lumber shall be centered on the side edge.

(j) Nails securing plywood sheathing to frame members shall be spaced as shown in figure 32. Machine driven nails having a definite head may be used for securing plywood sheathing providing they meet size requirements specified herein.

3.3.6.2 Stapling. Staples may be used to fasten sheathing to frame members; they shall not be used for fabrication of bases, fastening of framing members to each other, or for assembly of crates. Staples shall have crowns of not less than 3/8 inch wide and shall have a wire diameter of not less than 0.062 inch (16 gage). Straight leg staples shall be long enough to provide a minimum 1/4-inch clinch; divergent point staples shall be not less than 1 inch long. Spacing of staples shall be the same as for nails specified herein. Staples shall always be driven from the plywood side.

3.3.6.3 Bolt application. Holes shall be prebored to receive carriage bolts and shall be the exact diameter of the bolt. The lead holes for lag bolts shall be the same diameter as the shank, even though the threaded portion may have a greater diameter than the shank, and shall be as shown in table I.

Downloaded from http://www.everyspec.com

TABLE I. Lag bolt lead hole sizes.

Diameter of Threaded Portion of Lag Bolt	Diameter of Lead Hole	
	Groups I, II, and III Woods	Group IV Woods
(inch)	(inch)	(inch)
1/4	3/16	3/16
5/16	1/4	1/4
3/8	1/4	5/16
1/2	3/8	7/16
5/8	3/8	1/2
3/4	1/2	5/8

Lag bolts shall be placed by being turned in their holes the full length of the bolt and shall not be driven in with a hammer or by any similar means. If for any reason the thread in the wood is stripped when the lag bolts are placed, the lag bolt shall be removed and placed in a new hole near the old position. A flat washer shall be used under the head of each lag bolt and under the nut of each carriage bolt. After the nut is placed, the thread of the carriage bolt projecting beyond the nut shall be painted with a suitable metal primer or similar material.

3.3.6.4 Splices. Splices and butt joints made in frame members and skids of long crates shall be as shown in figure 2.

3.3.6.5 Inspection doors. When specified (see 6.2), one or more inspection or access doors shall be provided. Doors shall be of the size and in the location specified by the procuring agency and will be used for interim inspection or servicing of contents. Doors shall be built without cutting the frame members and shall be hinged at the top and fastened by lag screws at the sides and bottom as shown in figure 22. Cleats and stops shall be made of 1 inch material. Doors shall be made of the same type and thickness material used for sheathing. Holes shall be provided through the door and an adjacent frame member for a seal wire and lead seal bearing the inspectors' stamp. When hinges with exposed screws are used, the hinge side of the door shall also be sealed.

3.3.6.6 Ventilation. All crates shall be provided with ventilating holes or slots which shall be located at each end or at ends and sides of lumber and plywood sheathed crates, or around the perimeter of plywood and lumber sheathed crates. These ventilating holes or slots shall be located immediately below the top frame member and be provided with a baffle as shown in figure 21 when slots are used in plywood sheathed crates or when holes are in clusters in lumber sheathed crates. Single holes drilled without baffles shall be sloped at 45 degrees to drain outward. No holes or slots shall be cut in any frame member.

Downloaded from http://www.everyspec.com

3.3.6.6.1 Class 1 crates. Class 1 crates shall be provided with ventilating holes, 3/4 inch in diameter. The crate liner shall be removed from the ventilating area and all splinters and chips shall be removed from the holes.

3.3.6.6.1.1 End ventilation. Ventilating holes shall be provided in each end in one or more clusters, placed near the upper frame members, provided with a baffle, and spaced 2 inches on center as shown in figure 21. In small crates, holes may be located so that diagonals or struts can be utilized in part for cleats. In crates over 10 feet in length, the ventilating holes shall be divided equally between the sides and ends with a baffle provided for each group of holes. The clusters of holes shall be located as near the midpoint of the side and end as practical. The number of holes shall comply with table II.

TABLE II. Ventilation hole requirements.

	Lumber-sheathed crates		Plywood-sheathed crates
Volume of crate (cu. ft.)	End ventilation minimum number of 3/4 inch diameter holes required in each end (place in clusters and use baffle)	Perimeter ventilation (alternate) Total minimum number of 3/4 inch diameter holes required around perimeter (space evenly and slope to drain out)	Area required in each end (Use baffle and screen) (sq. in.)
0-100	3	6	7
100-150	4	8	10
150-200	5	10	14
200-400	9	18	27
400-600	14	27	40
600-800	18	36	52
800-1,000	22	44	66
1,000-1,200	27	54	80
1,200 and over	33	66	100

Note: In large crates, where a large ventilating area is required, two or more slots or clusters of holes may be used in each panel.

Downloaded from http://www.everyspec.com

3.3.6.6.1.2 Perimeter ventilation. As an alternate to end ventilation, the 3/4-inch ventilating holes may be spaced evenly around the perimeter of the crate just under the top frame member and drilled at a 45 degree angle to drain outward. The total number of holes shall comply with table II.

3.3.6.6.2 Class 2 crates. Class 2 crates shall be provided with a horizontal slot in each end. The ventilation slots shall be provided with baffles and screens as shown in figure 21. The required ventilating area shall comply with table II. In crates over 10 feet in length, the ventila tion area shall be divided equally between the sides and ends of the crate with baffle and screen provided for each ventilating area. The ventilating area shall be placed as near the midpoints of the sides and ends as practical. In small crates, 3/4-inch-diameter holes may be substituted for the slots in the proportion of two holes for each square inch of required area.

3.4 Class 1 crates. Class 1 crates may be either bolted or nailed. Bolted crates shall be so designed that the major components of base, sides, ends, and top may be assembled to each other with lag bolts in order that the crate can be readily disassembled and, if desired, reassembled without major damage to the parts. Nailed crates are assembled with nails and straps, are not easily demountable, and because of probable damage during disassembly, are not generally reused. When specified (see 6.2), a combination of top, side, and end panels may be fabricated and assembled to each other as specified for nailed crates, and the unit fastened to the base as specified for bolted crates.

3.4.1 Bases. Bases shall be designed to support the weight of the crated article only when the sides and ends are fastened in place (see 6.6).

3.4.1.1 Style a (skid-type). Style a bases shall consist of longitudinal skids and rubbing strips, headers, load bearing floorboards, and flooring as shown on figures 4 and 5. Details of construction shall be the same for bolted and nailed crates.

3.4.1.1.1 Skids. Any species of wood except Group I shall be used for skids. Skids shall be spaced no farther apart than 48 inches, center to center, across the width of the base. Minimum sizes shall be as shown in table III. When either the length or net load exceed the maximum shown, the next larger skid shall be used.

Downloaded from http://www.everyspec.com

TABLE III. Allowable minimum skid sizes.

Maximum net load (lb.)	Maximum length of crate (ft.)	Nominal size of skids (in.)
300	16	2 x 4 (flat) 1/
1,000	12	2 x 4 (flat) 1/
2,000	20	3 x 3 or 3 x 4 (flat) 2/
10,000	32	4 x 4
30,000	20	4 x 6 (on edge)

1/ For nailed crates only.
2/ For crates with 2-inch-thick lower frame members or 2-inch end struts.

When necessary, skids may be spliced or laminated according to the details shown in figure 2 or 3, but the use of 2- by 4-inch skids shall be limited to such lengths that no splicing would be required. Wherever possible splices shall be made not more than one-third of the length of the base from the ends of the skid and the splice locations alternated in adjacent skids. To prevent splitting, all skids shall have a carriage bolt placed crosswise and 2 to 3 inches back from each end of the skid as shown in figures 4 and 24. Bolt sizes shall comply with table IV.

3.4.1.1.2 Rubbing strip for skids. Rubbing strips of 3-inch-thick lumber the same width as the skids shall be attached to the skids with two staggered rows of sixteenpenny nails spaced 12 inches apart in each row. The strips shall be beveled full depth at an angle of 45 degrees at sling and forklift-truck openings. Openings in the rubbing strips for forklift-truck access shall be 12 inches in length, 28 inches center to center, and positioned to straddle the center of balance of the loaded crate. Sling openings not less than 4 inches in length, and preferably 8 inches, shall be provided at the ends of the rubbing strip where permitted by the length of the crate and by the location of the forklift-truck access openings. No center pieces of the rubbing strips shall be less than 16 inches in length. On crates 5 feet and less in length, the forklift openings shall be omitted; end sling openings shall be not less than 6 inches long and shall serve as both forklift and sling openings.

3.4.1.1.3 Headers. Headers shall be placed at each end of the base and shall be bolted to each skid with one carriage bolt. Sizes of headers and bolts shall be as shown in table IV.

Downloaded from http://www.everyspec.com

TABLE IV. Required header sizes and carriage bolt sizes.

Skid size (in.)	Header Size (in.)	Bolt Diameter (in.)
2 x 4	2 x 4 1/	3/8
3 x 3 3 x 4	3 x 3	3/8
4 x 4 4 x 6	4 x 4	1/2

1/ For nailed crates only in width to 48 inches. For wider crates or bolted crates, use 3 x 3.

Headers shall be of a single piece and not built up to two or more pieces to meet the dimension requirements. Headers shall be placed atop the plywood when plywood flooring is used. Headers shall be placed a distance back from the ends of the skids equal to the thickness of the end sheathing. The ends of the headers shall be notched for bases floored with lumber; ends of headers for plywood floored bases shall be set back from the outside edges of the outer skids (see figures 4 and 5). The notched and set back distances shall be equal to the thickness of the lower frame members of the sides.

3.4.1.1.4 Forklift members. The forklift members shall consist of the header and two members of equal size, spaced 20 and 40 inches (on center) from each end of the skids and bolted as shown in figure 4. Where the form of the item to be crated makes it impractical to use these members, or when crates are short or narrow, 2-inch-thick lumber shall be used in the 42-inch end areas as shown in figure 5. When 2-inch lumber is used in the forklift area and intermediate skids are required because of the width of the base, the 2-inch forklift members shall be bolted to the intermediate skids. Forklift members shall be notched or set back as specified for headers in 3.4.1.1.3.

3.4.1.1.5 Load-bearing floorboards. Load-bearing floorboards shall be placed where the concentrated loads of the contents occur. The cross section shall be determined from table X. The forklift members and any 1- or 2-inch flooring may be considered as load bearing within limits of their assigned values. The ends of load-bearing floor boards shall be notched or set back from the edge of the base in the same manner as described for headers as specified in 3.4.1.1.3 (see figures 4 and 5).

Downloaded from http://www.everyspec.com

Loadbearing floorboards 4 inches wide shall be bolted to each skid with one carriage bolt and load-bearing floorboards over 4 inches wide shall be bolted to each skid with two carriage bolts and the intermediate skid where one is required. Bolt diameters shall be the same as specified in 3.4.1.1.3 for corresponding skid sizes.

3.4.1.1.6 Lumber flooring. Lumber floorboards shall be neither less than 1 inch thick nor less than 4 inches wide, and shall be placed at right angles to the skids. Boards shall be spaced 1/4 inch apart for drainage and the ends placed flush with the outside face of the skids. When a large area of the base is floored with 2-inch-thick lumber, the use of filler strips 2 inches wide shall be used along each side over the thinner flooring to equal the thickness of the 2-inch flooring as shown in figure 5. The filler strips shall be nailed to the flooring with two staggered rows of sixpenny nails spaced 10 inches apart. Nailing of floorboards to skids shall be as shown on figure 1 and as specified in 3.3.6.1.

3.4.1.1.7 Plywood flooring. Plywood 3/8 inch in thickness, may be used in place of 1-inch lumber flooring as shown in figures 4 and 5, but not as load-bearing floorboards. Plywood flooring shall be laid flush with the outer edges of the skids and with the face grain perpendicular to the skid length. Headers and load-bearing floorboards shall be placed on top of the plywood and bolted to the skids after the plywood has been nailed in place. Plywood flooring shall be nailed to each skid with two rows of sevenpenny nails, staggered and spaced 6 inches apart in each row. A spacing of 1/4 inch shall be allowed between sheets of plywood for drainage. When 1/3 to 1/2 the area of the base is floored with 2-inch boards, the plywood flooring shall be used only between these areas. Filler strips shall be nailed over the plywood as shown on figure 5, with nailing as specified in 3.4.1.1.6.

3.4.1.1.8 Drainage. A drainage hole, 1/2 inch in diameter, shall be drilled adjacent to each header or load bearing member in each outer edge of each plywood floored section of the base (a "section" being a portion of the base in which water might be trapped) (figures 4 and 5). Care shall be taken to locate the holes so that the holes will not be covered when the contents are placed on the base of the crate.

3.4.1.2 Style b (sill-type). Style b bases shall be constructed as shown in figure 6. The load contained on Style b bases shall always be transmitted to the side sills by means of intermediate sills or by the article itself.

Downloaded from http://www.everyspec.com

3.4.1.2.1 Side and end sills. The size of the side sills shall be determined from table XI. End sills shall be of the same size as side sills. The side sills shall overlap the end sills as shown in figure 6. Sills shall be laminated as shown in figure 3, when necessary.

3.4.1.2.2 Intermediate sills and load-bearing headers. Intermediate sills shall be applied crosswise of the base. The size of intermediate sills shall be determined from table XII. The weight used to determine the size of an intermediate sill shall be that amount of the load actually supported by that sill. Load-bearing headers shall be of the same size as intermediate sills. Load-bearing headers and intermediate sills will not be required when all of the load is supported by the side sills. Load-bearing headers shall be attached at their ends to intermediate sills and intermediate sills shall be attached at their ends to side sills by a combination of nailing and the use of metal strap hangers fabricated from 1-1/4 inches wide by 0.035 inch thick nail-on strappings as shown in figure 7.

3.4.1.2.3 Bridging. Intermediate sills shall be bridged at the ends with 1 inch lumber and at intervals along the span not exceeding 4 feet with 2-inch lumber of the same depth as the intermediate sills (see figure 6).

3.4.1.2.4 Bottom sheathing. Style b bases shall be sheathed on the bottom with lumber securely nailed to the bottom surface of the sills at right angles to the direction of the side sills. Boards shall be 4 to 10 inches wide and of not less than 1-inch material for spans of less than 30 inches between longitudinal members and of not less than 2-inch material for spans of 30 inches or more. Bottom sheathing shall be flush with the outside face of all side and end sills and be spaced 1/4 inch apart for drainage. One-inch boards shall be nailed with eight-penny nails, 2-inch boards with twelvepenny nails, and nailing shall be as shown on figure 1.

3.4.1.2.5 Rubbing strips. Style b bases shall have rubbing strips of 3-inch thick material, the width of which shall be not less than 4 inches. The rubbing strips shall always be applied lengthwise of the base and positioned under each longitudinal member. When required, intermediate rubbing strips of the same size are located so that the clear distance between rubbing strips does not exceed 36 inches. Other requirements shall be as specified in 3.4.1.1.2.

Downloaded from http://www.everyspec.com

3.4.2 Tops. Tops shall be double sheathed and shall be either (a) narrow, up to 54 inches inclusive wide; (b) intermediate, over 54 inches but not over 60 inches wide; or (c) wide, over 60 but not over 120 inches wide. The 1/4-inch plywood, shall have the face grain parallel to the width of the top and shall be flush with the outside edges of the frame and shall be joined over joists or frame members. Roofing felt or polyethylene film, not less than 4 mils thick, shall be applied over the plywood with a 4-inch minimum overlap at joints. A non-hardening caulk or mastic shall be applied in the overlap area. Top sheathing boards not less than 4-inches wide, shall be applied over the plywood and waterproofing barrier and shall overlap the edges and ends of the top framing by a distance equal to the thickness of side or ends sheathing less 1/8 inch. Headers joining the joists together shall be 1 inch by the depth of the joists for intermediate and wide tops.

3.4.2.1 Narrow tops. Narrow tops shall be framed on 2- x 4-inch members in figure 8. Top sheathing boards shall be applied parallel to the width of the top and shall be of single pieces. At plywood joints on the inside of the top, 2- x 3-inch pieces shall be used as shown in figure 8.

3.4.2.2 Intermediate tops. Intermediate tops shall be framed on 2-inch joists placed flat and headers 1 inch by the thickness of the joists. The top sheathing boards shall be placed parallel to the length of the top (see figure 9). When the crate length is over 10 feet, end joints will be permitted in top sheathing boards. All joints shall be made over joists, two joints shall not be adjacent to each other, and not more than one-third of the joints shall be made over any one joist.

3.4.2.3 Wide tops. Wide tops shall be constructed similar to intermediate tops except that the wide tops shall be framed in joists and headers placed on edge as shown in figure 10.

3.4.2.4 Fabrication nailing. Fabrication nailing of tops shall be as shown on figures 11 and 12. All plywood members shall be nailed on at least three edges.

3.4.2.5 Grabhook reinforcing joists for lifting crates. When no joists are used or when a joist does not coincide with the center of balance, a reinforcing joist shall be placed at the center of balance to distribute the load when the crate is lifted with a single set of grab-hooks. Reinforcing joists shall conform to the requirements of table V.

Downloaded from http://www.everyspec.com

TABLE V. Reinforcing joist requirements.

Size of single reinforcing joist (in.)	Gross loads not exceeding (lb.)	Length of joist not exceeding (in.)
2 x 4	1,000	72
2 x 4	2,000	60
2 x 4	3,000	48
2 x 4	5,000	36
4 x 4	10,000	96
4 x 4	15,000	72
4 x 4	22,000	60

When the gross loads exceed 22,000 pounds or where the width exceeds 96 inches for any load over 10,000 pounds, two 4- by 4-inch joists shall be used; one placed approximately 2 to 3 feet each way from the center of balance, for the use of two sets of grabhooks.

3.4.2.6 Lamination of joists. When two members are to be nailed together for joists and are 1 and 2 inches thick, respectively, they shall be nailed with sevenpenny nails with the nailheads in the thinner piece. When both members are 2 inches thick, twelvepenny nails shall be used. Nails shall be staggered in two rows at least 1 inch from the edges, and shall be 18 inches apart in the rows.

3.4.2.7 Alternate plywood sheathed top. For tops not exceeding 96 inches wide, single sheathing of 1/2-inch-thick plywood may be used in lieu of the double sheathed top. Face grain of the plywood shall be parallel with the width of the top. Framing members and joists shall be as specified for double sheathed tops. When joists do not coincide with plywood joints, a joint cover of 1- x 4-inch lumber shall be used on the inside of the top. A waterproof barrier shall be applied between the plywood and the framing. The barrier shall be polyethylene as specified in 3.4.2 or crate liner conforming to PPP-B-1055; application shall be as specified in 3.4.2.

3.4.3 Sides.

3.4.3.1 Number and type of panels. Sides shall be constructed as shown in figures 13, 14, and 15. In crates with Style b bases, the sheathing of sides and ends shall reach below the lower horizontal frame member a distance equal to the depth of the sills plus floor thickness, less 1/8 inch. The types of side panels shall vary with the inside crate height as specified in table VI.

Downloaded from http://www.everyspec.com

TABLE VI. Side panel types - class 1 crates.

Inside height of crate (in.)	Type of panel	Reference figure No.
Over 24 to 60	A	13
Over 60 to 108	B	14
Over 108 to 144	C	15

The number of panels for each full length side shall be computed by dividing the inside crate length by the inside height, and using the nearest whole number.

3.4.3.2 Member selection. The sizes of the upper and lower frame members, struts, and diagonals shall be determined from tables XIII to XXII except as otherwise specified. Loads referred to in the tables are the net loads and the dimensions are the inside measurements of the crate. The member sizes shall be based on Group II woods. If the exact size of the crate is not given in the tables, member sizes for the crate of the next greater length and width, and the next smaller height shall be used.

3.4.3.2.1 Upper and lower frame members. Except where vertical joist supports are required, upper frame members for crates over 54 inches wide shall always be 2 inches thick and a minimum of 2 by 4 inches in size. Splicing of upper or lower frame members shall be done over or under a strut and shall be as shown in figure 2.

3.4.3.2.2 Vertical struts. Vertical struts shall be continuous from the lower frame member to the upper frame member and the diagonal and horizontal braces shall be cut in between. The end struts shall be as shown in table VIII.

TABLE VII. End strut requirements.

Net load (lb.)	Nominal size of end struts	
	Bolted crate (in.)	Nailed crate (in.)
1,000 or under	2 x 4	2 x 4
Over 1,000 but under 5,000	3 x 3	2 x 4
5,000 and over	4 x 4	2 x 4

Downloaded from http://www.everyspec.com

3.4.3.2.3 Horizontal braces. Horizontal braces for Types B and C panels (figures 14 and 15) shall be the same thickness as the struts and 4 inches wide.

3.4.3.2.4 Diagonals. Size of diagonals shall be as specified in the member selection tables XIII to XXII and shall be located as shown in figures 13, 14, and 15. When frame members are 1 inch thick, gusset plates shall be cut from 1/4-inch plywood and shall be 12 inches minimum, in the shortest dimension. The corners shall coincide with the center line of the diagonals as shown in figure 16.

3.4.3.2.5 Joist supports. The upper frame members shall serve as supports for tops. When crates are 6 feet wide and 12 feet high or 8 feet wide and 10 feet high (tables XIII to XXII) and when the struts are 1 inch thick, vertical joist supports shall be provided as shown in figure 16. These shall consist of 2- by 4-inch members placed on and nailed to the frame members of the side and extending under each interior joist to the floor.

3.4.3.3 Liners. A crate liner shall be applied between the sheathing and frame members of sides and ends of all lumber-sheathed crates and shall conform to the crate liners specified in PPP-B-1055. The paper shall be placed horizontally as unrolled, with a 4-inch minimum shingle lap applied for proper drainage and shall cover the entire framed area. Vertical joints, when required, shall have a minimum 4-inch lap and shall be located at a vertical member.

3.4.3.4 Sheathing. Sheathing for the side and end panels of crates shall be applied vertically, shall extend to the bottom of the skids on side panels and to the tops of skids on the end panels of skid type base crates. Sheathing shall extend to the bottom of sills on sill-type base crates. Sheathing shall be either tongue-and-groove or square and shall be 1 inch thick. At least one side of all boards shall be dressed and the dressed side placed outward. No board shall be less than 4 inches in width. End boards shall be not less than 6 inches wide and preferably wider. No more than 10 percent of the boards (not more than one out of 10 boards) shall be of the minimum width, nor shall the narrow boards be adjacent to each other. Short boards, not less than 2 feet in length, may be used under the following conditions (figure 17); (1) boards shall be cut at right angles, (2) the center of a short sheathing board shall be at the approximate center of the width of a diagonal and shall have full coverage by the diagonal, or shall be joined on a horizontal member, (3) at least every second board and all end boards shall be full length, and (4) nailing shall be as shown in figure 17.

Downloaded from http://www.everyspec.com

3.4.3.5 Fabrication nailing. Nails securing sheathing to framing up to and including 2-inch thickness shall be driven through the sheathing and shall be of such length as to permit a minimum of 1/4-inch clinch on the framing. For nailing sheathing to horizontal and diagonal frame members 4 to 6 inches wide, three rows of nails shall be used. There shall be a minimum of three nails per crossing in sheathing boards 4 to 6 inches wide and a minimum of four nails in wider boards (figure 17). For nailing sheathing to horizontal and diagonal frame members over 6 inches wide, four rows of nails shall be used. There shall be a minimum of four nails per crossing in sheathing boards 4 to 8 inches wide and a minimum of five nails in wider boards (figure 17). For nailing sheathing to struts 4 to 6 inches wide, two rows of nails shall be used. The nails shall be spaced approximately 8 inches apart in each row and staggered. For wider struts use three rows of nails. The nails shall be spaced approximately 12 inches apart and staggered (figure 17). Nail spacing at vertical butt joints shall be as shown in figure 17. Gusset plates shall be secured with sevenpenny nails driven through and clinched on the sheathing. Nailing shall be as shown in figure 16. Vertical joist supports shall be secured with two tenpenny nails at each horizontal frame member crossing and one tenpenny nail at each diagonal crossing as shown in figure 16. Where vertical joists coincide with struts, there shall be two rows of nails on 30-inch centers.

3.4.3.6 Lag screw reinforcing strap for bolted crates. Reinforcing strap shall be used on side and end panels of all demountable crates as shown in figures 13, 14, 15, and 18. Galvanized steel strap, punched or drilled, 1-1/4 inches by 0.035 inch for 3/8 inch lag screws, and 2 inches by 0.050 inch for 1/2 and 5/8 inch lag screws, shall be nailed to the inner face of the sheathing between the lower edge of the bottom frame member and the bottom of the sheathing as shown in figure 18. The strap shall be located to coincide with the center of the skid or header and shall be nailed on maximum 2-inch centers to the sheathing with clout or similar nails. Nails shall be clinched at least 3/8 inch.

3.4.4 Ends. End types and size of members for ends in crates over 30 inches wide shall be determined in a manner similar to the sides, except that in all cases the thickness of the upper and lower frame members shall be the same as the struts specified in table XIII to XXII. The member arrangement shall conform to the details shown in figure 19. For crates less than 30 inches wide, single diagonals only are required and all frame members shall be 1 by 4 inches in size as shown in figure 20.

3.4.5 Assembly (Class 1 crates).

3.4.5.1 Bolted crate.

3.4.5.1.1 General. Type II (bolted) crates shall be assembled with lag bolts (see 3.3.5.4). Lead holes shall be used for lag bolts.

Downloaded from http://www.everyspec.com

3.4.5.1.2 Fastening sides to base. The sides shall be secured to the skids with lag bolts. For 3- by 3-inch or 3- by 4-inch skids, 3/8 inch diameter by 3-inch long lag bolts shall be used; for 4- by 4-inch skids, 1/2 inch diameter by 4-inch long lag bolts shall be used; and for 4- by 6-inch skids, 5/8 inch diameter by 4-inch long lag bolts shall be used. The number of lag bolts shall be as specified in table XXIII. One-half the number shall be used on each side and the spacing shall be uniform along the skid. Maximum spacing shall be 16 inches for 3/8-inch lag bolts and 20 inches for 1/2-inch lag bolts. Lead holes shall conform to 3.3.6.3 in size and shall be drilled in line with and through the center of the metal reinforcing strap as well as through the sheathing and into the skid. Assembly and placement details shall be as shown on figures 23 and 24.

3.4.5.1.3 Fastening sides to top. Lag bolts, 3/8 inch diameter by 3-1/2 inches long, shall be used to fasten the sides to the top. These lag bolts shall be placed so that there is one in the end of each joist at the approximate center (figure 25). For tops without joists, lag bolts shall be placed at the approximate center of the side frame member of the top and spaced no greater than 24 inches apart.

3.4.5.1.4 Fastening ends to top, sides, and base. Lag bolts for fastening ends to tops shall be 3/8 inch in diameter by 2-1/2 inches long. Lag bolts for fastening ends to sides shall be 3/8 inch diameter by 3-1/2 inches long. Placement and other assembly details shall be as shown in figures 23 and 25. Lag bolts for fastening ends to base shall be the same size as specified in 3.4.5.1.2. Location and spacing shall be as shown in figures 23 and 24. Lead holes shall be centered on the reinforcing strap.

3.4.5.2 Nailed crate.

3.4.5.2.1 General. Type I crates shall be assembled with nails and metal straps. General rules for crate assembly shall be as shown in table XXIV and figures 26 and 27.

3.4.5.2.2 Fastening sides and ends to base. Sides and ends shall be nailed to the skids and headers with cement-coated nails (figure 26). Two rows of nails shall be used for 2- by 4-inch, 3- by 3-inch, 3- by 4-inch, and 4- by 4-inch skids or headers and three rows of nails for 4- by 6-inch skids or headers and for Style b bases. The number of nails required for the perimeter of the crate shall be as shown in table XXV, and based on the gross load. Nail spacing shall be no greater than 6 inches in each row, and no less than two nails shall be used in each sheathing board.

Downloaded from http://www.everyspec.com

3.4.5.2.3 Fastening ends to sides and sides to ends. The end panels shall be nailed to the side panels with twentypenny cement-coated nails spaced 12 inches apart as shown in table XXIV and figure 26. The nails shall pass through the sheathing and the edge struts of the ends into the edge of the corner struts of the sides. Predrilling shall be used for these nails to prevent splitting and the bit for drilling shall be approximately 75 percent of the diameter of the nail shank. The edge sheathing boards of the side panels shall be nailed to the edge struts of the ends with eightpenny cement-coated nails spaced 6 to 8 inches apart (figure 26).

3.4.5.2.4 Fastening top to sides and ends. Tops shall be fastened to sides and ends with corner reinforcing straps and tensioned straps with anchor plates as shown in figure 27. Corner straps shall be of such length as to allow nailing into framing of sides and ends.

3.4.5.3 Strapping. Strapping shall be used as shown in figure 27 on all bolted crates with net loads over 3,000 pounds and for all nailed crates. Tensioned metal strapping and corner straps shall conform to QQ-S-781, Class 1, Type I or II, finish A, not less than 3/4 inch wide by 0.028 inch thick. Corner strapping shall be prepunched or drilled. In addition, on crates with Style b bases, corner reinforcing straps shall be applied at the bottom corners as shown in figure 28. Nails shall be 1-1/4- to 1-1/2-inch galvanized roofing nails. A minimum of three nails shall be used for each strap leg and strapping shall be located so that nailing is in a frame member.

3.5 Class 2 crates. Class 2 crates shall be Types I or II as specified and shall have the same use limitations as described for lumber-sheathed crates in 3.4.

3.5.1 Bases. The construction of bases shall conform to bases of Class 1 crates as specified in 3.4.1. Details of construction shall be as shown in figures 4, 5, 6, and 7.

3.5.2 Tops. The construction of tops for Class 2 crates is identical to that described for Class 1 tops in 3.4.2. Details of construction shall be as shown in figures 8, 9, 10, 11, and 12.

3.5.3 Sides.

3.5.3.1 Number and type of panels. Types of panels for various heights and corresponding illustrative figure numbers shall be as shown in table VIII.

Downloaded from http://www.everyspec.com

TABLE VIII. Side panel types - class 2 crates.

Inside height of crate (in.)	Type of panel	Figure No.
Over 24 to 60	A	29
Over 60 to 96	B	30
Over 96 to 144	C	31

Type B panels include one horizontal brace and Type C panels have two horizontal braces. These shall be located so as to equally divide the space between upper and lower frame members. For all types of side panels, struts shall be spaced 24 inches on centers except at one or both ends so that 48-inch-wide plywood can be utilized with a minimum of waste. Sides shall be constructed as shown in figures 29, 30, and 31. In crates with Style b bases, the sheathing of sides and ends shall reach below the horizontal frame member a distance equal to the depth of the sills.

3.5.3.2 Member selection. The sides of the upper and lower frame members and struts shall be determined from tables XIII to XXII, except as otherwise specified. Loads referred to in the tables shall be the net loads and the dimensions shall be the inside measurements of the crate. The member sizes shall be based on Group II woods. If the exact size of the crate is not given in the tables, member sizes for the crate of the next greater length and width, and the next smaller height, shall be used.

3.5.3.2.1 Upper and lower frame members. The requirements for the upper and lower frame members shall comply with those described for lumber-sheathed side panels in 3.4.3.2.1 and listed by size in tables XIII to XXII.

3.5.3.2.2 Vertical struts. The requirements for struts shall comply with those described for lumber-sheathed side panels in 3.4.3.2.2 and listed by sizes in tables XIII to XXII.

3.5.3.2.3 Diagonals. No diagonals are required for Class 2 crates.

3.5.3.2.4 Joist supports. The joist supports shall comply with those described for Class 1 side panels in 3.4.3.2.5.

3.5.3.3 Liners. No liners are required for Class 2 crates.

3.5.3.4 Sheathing. Plywood sheathing shall be 3/8 inch thick for net loads up to 10,000 pounds, and 1/2 inch for net loads over 10,000 pounds, and shall be applied so that the face grain is vertical. Face grain may be horizontal

Downloaded from http://www.everyspec.com

for crates of 4 feet or less in height. Vertical joints in plywood sheathing shall be made over the center of a strut. Horizontal joints in plywood sheathing shall not be permitted in Type A side panels, are not desirable but permitted in Type B panels, and shall be permitted in Type C panels. All horizontal joints shall be made over the center of a horizontal brace.

3.5.3.5 Fabrication nailing. Nailing plywood sheathing to frame members of various widths shall be as shown in figure 32. For all fabrication, nails shall be driven through the plywood and clinched a minimum of 1/4 inch. Nailing vertical joist supports shall be as described in 3.4.3.5 except that ninepenny nails shall be used (see figure 16). Staples may be used to fasten plywood sheathing to framing members; application shall be in accordance with 3.3.6.2.

3.5.3.6 Lag-screw reinforcing strap for bolted crates. Reinforcing strap shall be used on side and end panels of all bolted crates as shown in figures 29, 30, and 31. Construction details shall be as specified in 3.4.3.6 and as shown in figure 18.

3.5.4 Ends. Panel types and sizes of members for ends shall be determined in a manner similar to the sides, except that in all cases, the thickness of the upper and lower frame members shall be the same as the struts specified in table XIII to XXII. The member arrangement shall be as shown in figure 33. Fabrication shall be as shown on figure 32.

3.5.5 Assembly (Class 2 crates).

3.5.5.1 Bolted-crate assembly. The assembly of plywood-sheathed bolted crates shall comply with the details specified for Class 1 crates in 3.4.5.1 and as shown in figures 23, 24, and 25.

3.5.5.2 Nailed-crate assembly. The assembly of plywood-sheathed nailed crates shall comply with the details specified for Class 1 crates in 3.4.5.2 and as shown in figures 26 and 27, except for size of nails which shall be as specified in table XXIV.

3.5.5.3 Reinforcing straps. The reinforcing straps shall be as specified for Class 1 crates in 3.4.5.3 and as shown in figures 27 and 28.

3.6 Tolerances. A tolerance of plus or minus 1/8 inch is allowable on the overall length and width of individual completed crate panels. Out-of-square deviation of individual panels shall be not more than 3/16 inch (3/8 inch difference in diagonals).

3.7 Workmanship. Crate panels shall be clean and free of slivers and protruding fastener points. Crate panels shall be square and free of cracks, splits, or other damage which would prevent easy and correct assembly and adversely affect the performance of assembled crates.

Downloaded from http://www.everyspec.com

4. QUALITY ASSURANCE PROVISIONS

4.1 Responsibility for inspection. Unless otherwise specified in the contract, the contractor is responsible for the performance of all inspection requirements specified herein. Except as otherwise specified in the contract, the contractor may use his own or any other facilities suitable for the performance of the inspection requirements specified herein, unless disapproved by the Government. The Government reserves the right to perform any of the inspections set forth in the specification where such inspections are deemed necessary to assure supplies and services conform to prescribed requirements.

4.1.1 Component and material inspection. The contractor is responsible for insuring that components and materials used are manufactured, examined, and tested in accordance with referenced specifications and standards, as applicable.

4.2 Classification of inspections. The inspection requirements specified herein are classified as follows:

(a) Preproduction inspection (see 4.3).
(b) Quality conformance inspection (see 4.4).
(c) Inspection of packaging (see 4.6).

4.3 Preproduction inspection. The preproduction crate shall be examined for the defects specified in 4.5.1 and tested as specified in 4.5.2. Presence of one or more defects when examined or the failure of any test shall be cause for rejection.

4.4 Quality conformance inspection.

4.4.1 Sampling. Sampling for examination and tests shall be in accordance with MIL-STD-105.

4.4.2 Lot. A lot shall consist of all crates of the same type, class, and style offered for delivery at one time.

4.4.3 Examination. Samples selected in accordance with 4.4.1 shall be examined for the major defects specified in 4.5.1. AQL shall be 6.5 defects per hundred units.

Downloaded from http://www.everyspec.com

4.4.4 Tests. Samples selected in accordance with 4.4.1 shall be tested as specified in 4.5.2. The AQL for the moisture content test shall be 4.0 defects per hundred units with an inspection level of S-4. One of the samples selected in 4.4.1 shall be assembled as described in 4.5.2.2. Nonconformance to the AQL for moisture content or inability to assemble the crates as specified shall be cause for rejection of the lot. The lot may be accepted after complete screening and correction of defects.

4.5 Inspection procedure.

4.5.1 Examination. The crate, or the unassembled components to make a complete crate, as applicable, shall be examined for the following major defects:

101. Crate not of type, class, or style specified.
102. Crate not of proper size.
103. Crate panels not square within specified tolerances.
104. Nails and staples of improper size.
105. Nails and staples not clinched when specified.
106. Carriage and lag bolts of improper size.
107. Quality of wood components not in accordance with MIL-STD-731.
108. Frame members not of sizes specified.
109. Skids and rubbings strips not of sizes specified.
110. Skids not located as specified.
111. Headers not of single piece.
112. Headers and load bearing floorboards not secured with carriage bolts as specified.
113. Plywood not of type specified.
114. Crate panels not fabricated as specified
115. Waterproof barrier in top missing.
116. Ventilation provisions not as specified.
117. Fork truck openings of improper size.
118. Lag bolt reinforcing strap missing on Type II crates.

4.5.2 Tests.

4.5.2.1 Moisture content. Moisture content shall be determined using the electric-moisture meter method of MIL-STD-1363. A minimum of six readings, at least one reading on a frame member of each crate panel, shall be taken. The average of the six readings shall meet the requirements of 3.3.5.1.

4.5.2.2 Assembly test. A crate shall be completely assembled to insure achievement of a container which can be properly and easily assembled, which is square, and is of the proper size.

Downloaded from http://www.everyspec.com

4.6 Inspection of packaging.

4.6.1 Quality conformance inspection.

4.6.1.1 Unit of product. For inspection purposes, a completed pack of an unassembled crate, or an assembled crate, whichever appropriate, shall be the unit of product.

4.6.1.2 Sampling. Sampling for examination shall be in accordance with MIL-STD-105.

4.6.1.3 Examination. Samples selected in accordance with 4.6.1.2 shall be examined for the following major defects. AQL shall be 2.5 percent defective.

119. Unassembled crate not bundled and strapped as specified.
120. Crate components missing from bundle.
121. Marking incorrect, illegible, or missing.

5. PACKAGING

5.1 Packing. Packing shall be level A or Commercial (see 6.2).

5.1.1 Level A. Crates shall be unassembled with the base, sides, ends, and top secured together to form a single bundle. The bundle shall be secured with at least two straps conforming to QQ-S-781, Class 1, Type I or IV, and having a minimum size of 5/8 X 0.020 inch. Unless otherwise specified herein, strapping shall be finish B. When specified (see 6.2), strapping shall be finish A. Strapping shall be located one-sixth the length of the bundle from each end; intermediate straps shall be used when the distance between straps exceeds 60 inches.

5.1.2 Commercial. Crates shall be shipped either assembled or unassembled and bundled in accordance with MIL-STD-1188.

5.2 Marking. For level A packing, marking of bundles for shipment and storage shall be in accordance with MIL-STD-129. For commercial packing, marking of assembled crates or bundles shall conform to MIL-STD-1188.

Downloaded from http://www.everyspec.com

6. NOTES

6.1 Intended use. The crates described by this specification are intended to protect items from atmospheric elements during both domestic and overseas shipment. They are designed to withstand the rough handling expected during military logistic operations including stacking and outside storage for a prolonged period. Class 1 and 2 crates may be used interchangably as desired; however, when weight is a prime consideration, the Class 2 crate should be used as the lack of diagonals and thinner plywood sheathing results in a lighter crate. Demountable crates, Type II, should be used whenever it is expected that the contained item will require re-shipping to another destination. Sill bases, Style b, are intended for items which project below their mounting points, such as disassembled vehicles.

6.2 Ordering data. Procurement documents should specify the following:

(a) Title, number, and date of this specification.
(b) Type, class, and style of crate required (1.2).
(c) When a preproduction model is required (3.2).
(d) Time frame required for submission of preproduction model (3.2).
(e) When dimensions must conform to the International Loading Gauge (3.3.3).
(f) When inspection doors are required (3.3.6.5).
(g) When top, sides, and ends shall be assembled with nails and the entire assembly bolted to the base (3.4).
(h) Degree of packing required (5.1).
(i) When strapping shall be finish A (5.1.1).

6.3 Preproduction model. Any changes or deviations of production crates from the approved preproduction model during production will be subject to the approval of the contracting officer. Approval of the preproduction model will not relieve the contractor of his obligation to furnish crates conforming to this specification.

6.4 Definitions. The component parts of crates discussed herein were selected on the basis of the function of the part. Alternate names are sometimes given as being the names often applied by industry.

Downloaded from http://www.everyspec.com

6.4.1 Diagonals. Diagonals are frame members positioned between parallel frame members and placed at angles of nearly 45 degrees to them. Diagonals serve as braces and insure rigidity in the crate.

6.4.2 End frame members. End frame members are similar to side frame members but perpendicular to the long dimension.

6.4.3 Filler strips. Filler strips are boards placed across the ends of thin, nonload-bearing floorboards which serve to fill the space below the lower frame member of the sides.

6.4.4 Frame members. Frame members are those parts which form the fundamental structure of the crate upon which the strength and rigidity of a lumber-sheathed crate depends.

6.4.5 Hanger-metal. Hanger-metal is a metal nailed strap used to aid in support of intermediate sill in sill-type base.

6.4.6 Headers. Headers either transverse members at each end of skid bases or longitudinal members at each end of top joists. Headers in bases serve to hold the base together as a unit, to transfer loads to outside skids, and to provide a fastening member for end panels. Headers in top panels serve to position and support joists and to provide a fastening member for side panels.

6.4.7 Horizontal braces. Horizontal braces are members positioned between struts and parallel to the upper and lower frame members and serve to reduce the unsupported span of the sheathing.

6.4.8 Joists. Joists are members extending across the crate underneath the top which serve to support and transfer vertical stacking loads to the side panels. Joists also serve to prevent crushing or buckling of tops when slings or grabhooks are used.

6.4.9 Load-bearing floorboards. Load-bearing floorboards are transverse members of bases which serve to distribute and transfer loads to the outside skids.

6.4.10 Rubbing strips. Rubbing strips are longitudinal members nailed to the bottom of skids to provide for sling and forklift truck handling.

Downloaded from http://www.everyspec.com

6.4.11 Sheathing. Sheathing is the plywood or boards nailed to the frame members and enclosing the crate. Usually that used on the top panels is called top sheathing; that used on the side or end panels is called side or end sheathing; that nailed to the top of skids is called flooring; and that nailed to the bottom of sills is called bottom sheathing.

6.4.12 Side frame members. Side frame members are the members of tops without joist which are parallel to the long dimenion and serve as fastening members and to tie the construction together.

6.4.13 Sills. Sills are the members, which with sill bridging, form the frame work of sill-type bases. Sills carry and transfer loads to side panels and serve as fastening members. There are side sills, end sills, and intermediate sills.

6.4.14 Sill bridging. Sill bridging are members of the same depth as the sills, which are inserted at right angles to the intermediate sills and serve to prevent lateral turning or buckling of sills.

6.4.15 Skids. Skids are longitudinal members attached to the bottom of the crate which serve to support and transfer the load to the side panels.

6.4.16 Sleepers. Sleepers are members underneath the floor of skid-type bases to which the item is anchored (through the floor) so that the tie-down stress will be distributed.

6.4.17 Strap, lag screw. Strap, lag screw is a metal reinforcing strap used on sides and ends of bolted crates to reinforce and increase lateral resistance of lag screws.

6.4.18 Struts. Struts are vertical frame members, placed between the upper and lower frame members of the side and end panels and serve as columns for supporting vertical stacking loads. The end struts are sometimes referred to as corner posts.

6.4.19 Upper and lower frame members. Upper and lower frame members are those horizontal members at the top and bottom of the side and end panels which serve to tie the construction together.

6.4.20 Vertical joist supports. Vertical joist supports are vertical members attached to the inside face of the sides of crates which serve to support the joists and assist the struts in supporting vertical stacking loads.

Downloaded from http://www.everyspec.com

6.4.21 Inside dimensions. Inside length or width of a crate is the distance between inner surfaces of opposite struts. Inside height is the distance between floorboards of skid bases or top of sills of sill bases and the underside of top joists or framing members.

6.4.22 Outside dimensions. Outside dimensions are the overall length, width, and height of the crate or its contents, whichever is greater. Actual dimensions, except in designing, are corrected whole inches, any fraction less than 1/2 inch being disregarded, and any fraction of

6.4.23 Cubic displacement. Cubic displacement of a crate is calculated from the outside dimensions in inches and is stated in cubic feet.

6.5 Method of estimating tare weight. The approximate tare weight of either a lumber-sheathed or plywood-sheathed crate may be estimated as follows and as indicated in table IX.

Estimate the length, width, and height of the crate to the nearest 1/2 foot.

Compute the total area of sides, ends, top, and base = A.

Multiply crate width by crate height = S.

TABLE IX. Tar weight estimating factors.

S (sq. ft.)	Weight of crate (lb.)			
	1-inch lumber sheathing and 2-inch framing	1-inch lumber sheathing and 1-inch framing	3/8-inch plywood sheathing and 2-inch framing members	3/8-inch plywood sheathing and 1-inch framing members
Less than 20	A x 4.0	A x 3.6	A x 3.2	A x 2.9
20 and over but less than 40	A x 5.0	A x 4.5	A x 4.0	A x 3.6
40 and over but less than 70	A x 6.0	A x 5.4	A x 4.8	A x 4.3
70 and over	A x 7.0	A x 6.3	A x 5.6	A x 5.0

Downloaded from http://www.everyspec.com

All of the above weights are based on lumber weighing 2290 pounds per 1,000 nominal board feet. For any other wood weight, the tare weights obtained should be increased or decreased in the same proportion that the wood weight is increased or decreased.

6.6 Crate design. The engineering design of crates includes the consideration of normal handling stresses imposed on the loaded crate by fork lift trucks, slings, or grabhooks as well as stresses on members and assembly fastenings encountered by drops. The tops have been designed for a superimposed load of 50 pounds per square foot. The sides have been designed for a top load, with dunnage, of 200 pounds per square foot for net loads of 10,000 pounds and 400 pounds per square foot for loads over 10,000 pounds. The skids of the base have been considered as part of the lower frame member of the side in the engineering analysis. This analysis allows the use of smaller skids thereby saving cube and material, but prevents the handling of a loaded crate without the sides and ends in place.

6.7 Recycled material. It is encouraged that recycled material be used when practical as long as it meets the requirements of the specification (see 3.3.5).

Custodians:
Army - ME
Navy - SA
Air Force - 69

Review activities:
Army - CR, SM, GL, EA, AR
Navy - YD, MC

User activities:
Army - AT, ER
Navy - AS

Preparing activity:
Army - ME

Project 8115-0365

Downloaded from http://www.everyspec.com

TABLE X. Allowable load in pounds per inch of floorboard width - Groups I and II woods.

Distance between outside skids (in.)	Thickness of load-bearing floorboard (in.)					
	3/4in.	1/2 in.	2 1/2 in.	3 1/2 in.	5 1/2 in.	7 1/2 in.
12	57	287	600	1170	2900	5000
18	38	191	400	780	1930	3350
24	29	143	300	590	1400	2500
30	23	115	240	470	1160	2000
36	19	95	200	390	960	1680
42	16	82	170	335	830	1440
48	14	71	150	290	720	1250
54	12	63	130	260	645	1120
60	11	57	120	234	580	1000
66	10	52	110	212	525	910
72	9	48	100	195	480	840
84	8	41	85	140	360	630
96	8	35	75	167	300	710
108	7	34	66	130	233	560
120	7	30	60	117	210	500

Downloaded from http://www.everyspec.com

TABLE XI. Nominal size of side sills (in.).[1/]

Gross weight of crate (lb).	Length of crate (ft.)							
	4	8	12	16	20	24	28	32
to 2,000	2 x 4	2 x 4	2 x 4	2 x 4	2 x 4	2 x 6	2 x 6	2 x 6
2,001- 4,000	2 x 4	2 x 4	2 x 4	2 x 4	2 x 6	2 x 6	2 x 6	2 x 8
4,001- 6,000	2 x 4	2 x 4	2 x 4	2 x 6	2 x 6	2 x 6	2 x 8	2 x 8
6,001- 8,000	.....	2 x 4	2 x 6	2 x 6	2 x 6	2 x 8	2 x 8	2 x 8
8,001- 10,000	.....	2 x 6	2 x 6	2 x 6	2 x 8	2 x 8	2 x 8	2 x 10
10,001- 12,000	.....	2 x 6	2 x 6	2 x 8	2 x 8	2 x 8	2 x 10	2 x 10
12,001- 14,000	.....	2 x 6	2 x 8	2 x 8	2 x 8	2 x 10	2 x 10	2 x 10
14,001- 16,000	.....	2 x 8	2 x 8	2 x 8	2 x 10	2 x 10	2 x 10	2- 2 x 8
16,001- 18,000	.....	2 x 8	2 x 8	2 x 10	2 x 10	2 x 10	2- 2x8	2- 2x8
18,001- 20,000	.....	2 x 8	2 x 10	2 x 10	2 x 10	2- 2x8	2- 2x8	2- 2x8

1/ The above sizes are for crates with a height of 3 feet or less. For heights of over 3 feet, increase 2 x 4 sizes to 2 x 6; increase 2 x 6 sizes to 2 x 8; increase 2 x 8 sizes to 2 x 10; and increase 2- 2 x 8 sizes to 2- 2 x 10.

TABLE XII. Allowable load for intermediate sills (in pounds per inch of sill width).

Length of Sill (ft)	Sill depth (inch) Groups I and II wood						
	1-1/2 in	2-1/2 in	3-1/2 in	5-1/2 in	7-1/2 in	9-1/2 in	11-1/2 in
4	71	150	290	720	1250	2000	3000
5	57	120	234	580	1000	1640	2400
6	48	100	195	480	840	1320	2020
7	41	85	167	399	710	1170	1730
8	35	75	140	350	630	1020	1500
9	34	66	130	300	560	910	1350
10	30	60	117	270	500	820	1200

Downloaded from http://www.everyspec.com

TABLE XIII. Panel member selection table for 1,000 pounds, net load.

Length (ft.)	Members	4 ft. width Height (ft.) 2	4	6	8	10	12	6 ft. width Height (ft.)[1/] 2	4	6	8	10	12	8 ft. width Height (ft.)[1/] 2	4	6	8	10	12	10 ft. width Height (ft.) 2	4	6	8	10	12
6	Upper frame							2x4	2x4	2x4	2x4	2x4		2x4	2x4	2x4	2x4	2x4		2x4	2x4	2x4	2x4	2x4	2x4
	Lower frame																	2x4						2x4	2x4
	Struts																	2x4						2x4	2x4
	Diagonal																								
8	Upper frame							2x4	2x4	2x4	2x4	2x4		2x4	2x4	2x4	2x4	2x4		2x4	2x4	2x4	2x4	2x4	2x4
	Lower frame																	2x4						2x4	2x4
	Struts																	2x4					1x6	2x4	2x4
	Diagonal																								
10	Upper frame							2x4	2x4	2x4	2x4	2x4		2x4	2x4	2x4	2x4	2x4		2x4	2x4	2x4	2x4	2x4	2x4
	Lower frame																	2x4						2x4	2x4
	Struts																	2x4					1x6	2x4	2x4
	Diagonal																								
12	Upper frame							2x4	2x4	2x4	2x4	2x4		2x4	2x4	2x4	2x4	2x4		2x4	2x4	2x4	2x4	2x4	2x4
	Lower frame																	2x4						2x4	2x4
	Struts																	2x4					1x6	2x4	2x4
	Diagonal																								
16	Upper frame							2x4	2x4	2x4	2x4	2x4		2x4	2x4	2x4	2x4	2x4		2x4	2x4	2x4	2x4	2x4	2x4
	Lower frame																	2x4						2x4	2x4
	Struts																1x6	2x4			1x6		1x6	2x4	2x4
	Diagonal																								
20	Upper frame							2x4	2x4	2x4	2x4	2x4		2x4	2x4	2x4	2x4	2x4		2x4	2x4	2x4	2x4	2x4	2x4
	Lower frame																	2x4						2x4	2x4
	Struts																1x6	2x4			1x6		1x8	2x4	2x4
	Diagonal																						1x6		1x6

Downloaded from http://www.everyspec.com

TABLE XIII. Panel member selection table for 1,000 pounds, net load. (cont'd)

Length (ft.)	Member	4 ft. width Height (ft.) 2	4	6	8	10	12	6 ft. width Height (ft.) 1/ 2	4	6	8	10	12	8 ft. width Height (ft.) 1/ 2	4	6	8	10	12	10 ft. width Height (ft.) 2	4	6	8	10	12
24	Upper frame	1x6						1x6	2x4	2x4	2x4	2x4		1x6	2x4	2x4	2x4	2x4		1x6	2x4	2x4	2x4	2x4	2x4
	Lower frame																	2x4						2x4	2x4
	Struts	1x6						1x6			1x6			1x6	1x6		1x6	2x4		1x6	1x6		1x8	2x4	2x4
	Diagonal	1x6						1x6						1x6			1x6			1x6			1x6		1x6
28	Upper frame	1x6						1x6	2x4	2x4	2x4	2x4		1x6	2x4	2x4	2x4	2x4		1x6	2x4	2x4	2x4	2x4	2x4
	Lower frame																	2x4					2x4	2x4	2x4
	Struts										1x6			1x6	1x6		1x8	2x4		1x6	1x6		2x4	2x4	2x4
	Diagonal	1x6						1x6						1x6			1x6	1x6		1x6			2x4	1x6	1x4
32	Upper frame	1x6						1x6	2x4	2x4	2x4	2x4		1x6	2x4	2x4	2x4	2x4		1x6	2x4	2x4	2x4	2x4	2x4
	Lower frame																2x4	2x4					2x4	2x4	2x4
	Struts										1x6			1x6	1x6		2x4	2x4		1x6	1x6	1x6	2x4	2x4	2x4
	Diagonal	1x6		1x6				1x6			1x6	1x6		1x6			2x4	2x4		1x6			2x4	2x4	2x4

1/ Crates 12 feet high in 6-foot widths and crates 10 feet high in 8-foot widths require 2x4 vertical joists supports when struts are 1 inch thick; all other sizes use horizontal joist supports.
Note. All blank spaces are 1x4's.

Downloaded from http://www.everyspec.com

TABLE XIV. Panel member selection table for 2,000 pounds, net load.

Length (ft.)	Members	4 ft. width Height (ft.) 2	4	6	8	10	12	6 ft. width Height (ft.)[1/] 2	4	6	8	10	12	8 ft. width Height (ft.)[1/] 2	4	6	8	10	12	10 ft. width Height (ft.) 2	4	6	8	10	12
6	Upper frame							2x4	2x4	2x4	2x4	2x4		2x4	2x4	2x4	2x4	2x4		2x4	2x4	2x4	2x4	2x4	2x4
	Lower frame																	2x4						2x4	2x4
	Struts																	2x4						2x4	2x4
	Diagonal																								
8	Upper frame							2x4	2x4	2x4	2x4	2x4		2x4	2x4	2x4	2x4	2x4		2x4	2x4	2x4	2x4	2x4	2x4
	Lower frame																	2x4						2x4	2x4
	Struts																	2x4					1x6	2x4	2x4
	Diagonal																								
10	Upper frame							2x4	2x4	2x4	2x4	2x4		2x4	2x4	2x4	2x4	2x4		2x4	2x4	2x4	2x4	2x4	2x4
	Lower frame																	2x4						2x4	2x4
	Struts																	2x4					1x6	2x4	2x4
	Diagonal																1x6						1x6		
12	Upper frame							2x4	2x4	2x4	2x4	2x4		2x4	2x4	2x4	2x4	2x4		2x4	2x4	2x4	2x4	2x4	2x4
	Lower frame																	2x4						2x4	2x4
	Struts																	2x4					1x6	2x4	2x4
	Diagonal																						1x6		
16	Upper frame							2x4	2x4	2x4	2x4	2x4		2x4	2x4	2x4	2x4	2x4		2x4	2x4	2x4	2x4	2x4	2x4
	Lower frame																	2x4						2x4	2x4
	Struts																1x6	2x4			1x6		1x6	2x4	2x4
	Diagonal																1x6						1x6		1x6
20	Upper frame							2x4	2x4	2x4	2x4	2x4		2x4	2x4	2x4	2x4	2x4		2x4	2x4	2x4	2x4	2x4	2x4
	Lower frame																	2x4						2x4	2x4
	Struts																1x6	2x4			1x6		2x4	2x4	2x4
	Diagonal																1x6	1x6					2x4		1x6

Downloaded from http://www.everyspec.com

TABLE XIV. Panel member selection table for 2,000 pounds net load. (cont'd)

Length (ft.)	Members	4 ft. width Height (ft.) 2	4	6	8	10	12	6 ft. width Height (ft.)[1/] 2	4	6	8	10	12	8 ft. width Height (ft.)[1/] 2	4	6	8	10	12	10 ft. width Height (ft.) 2	4	6	8	10	12
24	Upper frame	1x6						1x6	2x4	2x4	2x4	2x4		1x6	2x4	2x4	2x4		2x4	1x6	2x4	2x4	2x4	2x4	2x4
	Lower frame																2x4		2x4				2x4	2x4	2x4
	Struts	1x6						1x6			1x6			1x6	1x6		2x4		2x4	1x6	1x6		2x4	2x4	2x4
	Diagonal	1x6						1x6			1x6			1x6			2x4		1x6	1x6			2x4	1x6	2x4
28	Upper frame	1x6						1x6	2x4	2x4	2x4	2x4		1x6	2x4	2x4	2x4		2x4	1x6	2x4	2x4	2x4	2x4	2x4
	Lower frame																2x4		2x4				2x4	2x4	2x4
	Struts	1x6						1x6			1x6			1x6	1x6		2x4		2x4	1x6	1x6		2x4	2x4	2x4
	Diagonal	1x6						1x6			1x6		1x6	1x6			2x4		2x4	1x6			2x4	1x6	2x4
32	Upper frame	1x6	1x6		2x4			1x6	2x4	2x4	2x4	2x4		1x6	2x4	2x4	2x4		2x4	1x6	2x4	2x4	2x4	2x4	2x4
	Lower frame				2x4						2x4						2x4		2x4				2x4	2x4	2x4
	Struts	1x6			2x4			1x6			2x4			1x6	1x6		2x4		2x4	1x6	1x6	1x6	2x4	2x4	2x4
	Diagonal	1x6			2x4			1x6			2x4		1x6	1x6			2x4	1x6	2x4	1x6		1x6	2x4	2x4	2x4

1/ Crates 12 feet high in 6-foot widths and crates 10 feet high in 8-foot widths require 2x4 vertical joist supports when struts are 1 inch thick; all other sizes use horizontal joist support.
Note. All blank spaces are 1x4's.

Downloaded from http://www.everyspec.com

TABLE XV. Panel member selection table for 4,000 pounds, net load.

Length (ft.)	Members	4 ft. width Height (ft.) 2	4	6	8	10	12	6 ft. width Height (ft.)[1/] 2	4	6	8	10	12	8 ft. width Height (ft.)[1/] 2	4	6	8	10	12	10 ft. width Height (ft.) 2	4	6	8	10	12
6	Upper frame							2x4	2x4	2x4	2x4	2x4		2x4	2x4	2x4	2x4		2x4	2x4	2x4	2x4	2x4	2x4	2x4
	Lower frame																		2x4					2x4	2x4
	Struts																		2x4					2x4	2x4
	Diagonal																						1x6		
8	Upper frame							2x4	2x4	2x4	2x4	2x4		2x4	2x4	2x4	2x4		2x4	2x4	2x4	2x4	2x4	2x4	2x4
	Lower frame																		2x4					2x4	2x4
	Struts																		2x4				1x6	2x4	2x4
	Diagonal										1x6						1x6						1x6		1x6
10	Upper frame							2x4	2x4	2x4	2x4	2x4		2x4	2x4	2x4	2x4		2x4	2x4	2x4	2x4	2x4	2x4	2x4
	Lower frame																2x4		2x4				2x4	2x4	2x4
	Struts																2x4		2x4				2x4	2x4	2x4
	Diagonal				1x6						1x6						2x4						2x4		
12	Upper frame							2x4	2x4	2x4	2x4	2x4		2x4	2x4	2x4	2x4		2x4	2x4	2x4	2x4	2x4	2x4	2x4
	Lower frame																		2x4				2x4	2x4	2x4
	Struts																		2x4				2x4	2x4	2x4
	Diagonal				1x6						1x6						1x6						2x4		1x6
16	Upper frame	1x6						2x4	2x4	2x4	2x4	2x4		2x4	2x4	2x4	2x4		2x4	2x4	2x4	2x4	2x4	2x4	2x4
	Lower frame																2x4		2x4				2x4	2x4	2x4
	Struts																2x4		2x4		1x6		2x4	2x4	2x4
	Diagonal				1x6						1x6						2x4		1x6				2x4		1x6
20	Upper frame	1x6						2x4	2x4	2x4	2x4	2x4		2x4	2x4	2x4	2x4		2x4	2x6	2x4	2x4	2x4	2x4	2x4
	Lower frame																2x4		2x4				2x4	2x4	2x4
	Struts																2x4		2x4		1x6		2x4	2x4	2x4
	Diagonal				1x6						1x6						2x4		1x6				2x4	1x6	2x4

Downloaded from http://www.everyspec.com

TABLE XV. Panel member selection table for 4,000 pounds, net load. (cont'd)

Length (ft.)	Members	4 ft. width Height (ft.) 2	4	6	8	10	12	6 ft. width Height (ft.) 1/ 2	4	6	8	10	12	8 ft. width Height (ft.) 1/ 2	4	6	8	10	12	10 ft. width Height (ft.) 2	4	6	8	10	12
24	Upper frame	1x6	1x6					1x6	1x6	2x4	2x4	2x4		1x6	1x6	2x4	2x4		2x4	1x6	1x6	2x4	2x4	2x4	2x4
	Lower frame										2x4						2x4		2x4				2x4	2x4	2x4
	Struts	1x6						1x6			2x4			1x6	1x6		2x4		2x4	1x6	1x6		2x4	2x4	2x4
	Diagonal	1x6			1x6			1x6			2x4		1x6	1x6			2x4	1x6	2x4	1x6		1x6	2x4	1x6	2x4
28	Upper frame	1x6	1x6					1x6	2x4	2x4	2x4	2x4		1x6	1x6	2x4	2x4		2x4	1x6	2x4	2x4	2x4	2x4	2x4
	Lower frame	1x6						1x6			2x4			1x6			2x4		2x4	1x6			2x4	2x4	2x4
	Struts	1x6						1x6			2x4			1x6	1x6		2x4		2x4	1x6	1x6		2x4	2x4	2x4
	Diagonal	1x6			1x6			1x6			2x4		1x6	1x6			2x4	1x6	2x4	1x6		1x6	2x4	2x4	2x4
32	Upper frame	1x6	1x6		2x4			1x6	2x4	2x4	2x4	2x4	2x4	1x6	1x6	2x4	2x4		2x4	1x6	2x6	2x4	2x4	2x4	2x4
	Lower frame	1x6	1x6		2x4			1x6			2x4		2x4	1x6			2x4		2x4	1x6			2x4	2x4	2x4
	Struts	1x6			2x4			1x6			2x4		2x4	1x6	1x6		2x4		2x4	1x6	1x6	1x6	2x4	2x4	2x4
	Diagonal	1x6			2x4		1x6	1x6			2x4	1x6	2x4	1x6	1x6		2x4	1x6	2x4	1x6		1x6	2x4	2x4	2x6

1/ Crates 12 feet high in 6-foot widths and crates 10 feet high in 8-foot widths require supports when struts are 1 inch thick; all other sizes use horizontal joist supports.
Note. All blank spaces are 1x4's.

Downloaded from http://www.everyspec.com

TABLE XVI. Panel member selection table for 6,000 pounds, net load.

Length (ft.)	Members	4 ft. width Height (ft.) 2	4	6	8	10	12	6 ft. width Height (ft.)[1/] 2	4	6	8	10	12	8 ft. width Height (ft.)[1/] 2	4	6	8	10	12	10 ft. width Height (ft.) 2	4	6	8	10	12
6	Upper frame							2x4	2x4	2x4	2x4	2x4		2x4	2x4	2x4	2x4		2x4	2x4	2x4	2x4	2x4	2x4	2x4
	Lower frame																		2x4				2x4	2x4	2x4
	Struts																		2x4				2x4	2x4	2x4
	Diagonal				1x6						1x6						1x6		2x4				2x4		
8	Upper frame							2x4	2x4	2x4	2x4	2x4		2x4	2x4	2x4	2x4		2x4	2x4	2x4	2x4	2x4	2x4	2x4
	Lower frame										2x4						2x4		2x4				2x4	2x4	2x4
	Struts										2x4						2x4		2x4				2x4	2x4	2x4
	Diagonal				1x6		1x6				2x4		1x6		1x6	2x4	1x6					1x6	2x4		2x4
10	Upper frame				2x4			2x4	2x4	2x4	2x4	2x4		2x4	2x4	2x4	2x4		2x4	2x4	2x4	2x4	2x4	2x4	2x4
	Lower frame				2x4						2x4						2x4		2x4				2x4	2x4	2x4
	Struts				2x4						2x4						2x4		2x4				2x4	2x4	2x4
	Diagonal				2x4						2x4		1x6				2x4		1x6			1x6	2x4	2x4	2x4
12	Upper frame	1x6			2x4			2x4	2x4	2x4	2x4	2x4		2x4	2x4	2x4	2x4		2x4	2x4	2x4	2x4	2x4	2x4	2x4
	Lower frame				2x4						2x4						2x4		2x4				2x4	2x4	2x4
	Struts				2x4						2x4						2x4		2x4				2x4	2x4	2x4
	Diagonal				2x4						2x4		1x6				2x4	1x6	1x6			1x6	2x4	1x6	2x4
16	Upper frame	2x6			2x4			2x6	2x4	2x4	2x4	2x4		2x6	2x4	2x4	2x4		2x4	2x6	2x4	2x4	2x4	2x4	2x4
	Lower frame				2x4						2x4						2x4		2x4				2x4	2x4	2x4
	Struts				2x4						2x4						2x4		2x4		1x6		2x4	2x4	2x4
	Diagonal				2x4						2x4		1x6				2x4	1x6	1x6			1x6	2x4	1x6	2x4
20	Upper frame	2x6	1x6		2x4			2x6	2x4	2x4	2x4	2x4		2x6	2x4	2x4	2x4		2x4	2x6	2x4	2x4	2x4	2x4	2x4
	Lower frame				2x4						2x4						2x4		2x4				2x4	2x4	2x4
	Struts				2x4						2x4	1x6	1x6	2x4	1x6	2x4	1x6	2x4			1x6		2x4	2x4	2x4
	Diagonal				2x4					1x6	2x4		1x6			1x6	2x4	1x6	2x4			1x6	2x4	1x6	2x4

Downloaded from http://www.everyspec.com

TABLE XVI. Panel member selection table for 6,000 pounds, net load. (cont'd)

Length (ft.)	Members	4 ft. width Height (ft.) 2	4	6	8	10	12	6 ft. width Height (ft.)[1/] 2	4	6	8	10	12	8 ft. width Height (ft.)[1/] 2	4	6	8	10	12	10 ft. width Height (ft.) 2	4	6	8	10	12
24	Upper frame	1x6	1x6	1x6	2x4			1x6	1x6	1x6	2x4	2x4	2x4	1x6	2x6	2x4	2x4	2x4	2x4	1x6	2x6	2x4	2x4	2x4	2x4
	Lower frame	1x6			2x4			1x6			2x4		2x4	1x6			2x4	2x4	2x4	1x6			2x4	2x4	2x4
	Struts	1x6			2x4			1x6			2x4	1x6	2x4	1x6	1x6		2x4	2x4	2x4	1x6	1x6		2x4	2x4	2x4
	Diagonal	1x6			2x4		1x6	1x6		1x6	2x4	1x6	2x4	1x6		1x6	2x4	2x4	2x4	1x6		1x6	2x4	2x4	2x4
28	Upper frame	1x6	2x4	1x6	2x4			1x6	2x4	2x4	2x4	2x4	2x4	2x6	2x6	2x4	2x4	2x4	2x4	2x6	2x6	2x4	2x4	2x4	2x4
	Lower frame	1x6			2x4			1x6			2x4		2x4	1x6			2x4	2x4	2x4	1x6		2x4	2x4	2x4	2x4
	Struts	1x6			2x4			1x6			2x4		2x4	1x6	1x6		2x4	2x4	2x4	1x6	1x6	2x4	2x4	2x4	2x4
	Diagonal	1x6			2x4		1x6	1x6		1x6	2x4	1x6	2x4	1x6		1x6	2x4	2x4	2x4	1x6		2x4	2x4	2x4	2x6
32	Upper frame	2x6	2x6	1x6	2x4		2x4	2x6	2x6	2x4	2x4	2x4	2x4	2x6	2x6	2x4	2x4	2x4	2x4	2x6	2x6	2x4	2x4	2x4	2x4
	Lower frame	1x6			2x4		2x4	1x6			2x4		2x4	1x6		2x4	2x4	2x4	2x4	1x6		2x4	2x4	2x4	2x4
	Struts	1x6			2x4		2x4	1x6			2x4		2x4	1x6	1x6	2x4	2x4	2x4	2x4	1x6	1x6	2x4	2x4	2x4	2x4
	Diagonal	1x6		1x6	2x4	1x6	2x4	1x6		1x6	2x4	1x6	2x4	1x6		2x4	2x4	2x4	2x6	1x6	1x6	2x4	2x6	2x6	2x6

1/ Crates 12 feet high in 6-foot widths and crates 10 feet high 8-foot widths require 2x4 vertical joist supports when struts are 1 inch thick; all other sizes use horizontal joist supports.
Note. All blank spaces are 1x4's.

Downloaded from http://www.everyspec.com

TABLE XVII. Panel member selection table for 8,000 pounds, net load.

Length (ft.)	Members	4 ft. width Height (ft.) 2	4	6	8	10	12	6 ft. width Height (ft.)[1/] 2	4	6	8	10	12	8 ft. width Height (ft.)[1/] 2	4	6	8	10	12	10 ft. width Height (ft.) 2	4	6	8	10	12
0	Upper frame				2x4			2x4	2x4	2x4	2x4	2x4		2x4	2x4	2x4	2x4		2x4	2x4	2x4	2x4	2x4	2x4	2x4
	Lower frame				2x4						2x4						2x4		2x4				2x4	2x4	2x4
	Struts				2x4						2x4						2x4		2x4				2x4	2x4	2x4
	Diagonal			1x6	2x4		1x6			1x6	2x4	1x6	1x6			1x6	2x4	1x6	2x4			1x6	2x4	1x6	2x4
8	Upper frame	1x6		2x4			2x4	2x4	2x4	2x4	2x4	2x4	2x4	2x4	2x4	2x4	2x4		2x4	2x4	2x4	2x4	2x4	2x4	2x4
	Lower frame				2x4		2x4				2x4		2x4			2x4	2x4		2x4			2x4	2x4	2x4	2x4
	Struts				2x4		2x4				2x4		2x4			2x4	2x4		2x4			2x4	2x4	2x4	2x4
	Diagonal			1x6	2x4		2x4			1x6	2x4		2x4			2x4	2x4		2x4			2x4	2x4		2x4
10	Upper frame	1x6			2x4			2x4	2x4	2x4	2x4	2x4		2x4	2x4	2x4	2x4		2x4	2x4	2x4	2x4	2x4	2x4	2x4
	Lower frame				2x4						2x4						2x4		2x4				2x4	2x4	2x4
	Struts				2x4						2x4		1x6				2x4		1x6	2x4			2x4	2x4	2x4
	Diagonal				2x4		1x6			1x6	2x4		1x6			1x6	2x4	1x6	1x6			1x6	2x4	1x6	2x4
12	Upper frame	2x6			2x4			2x6	2x4	2x4	2x4	2x4	2x4	2x6	2x4	2x4	2x4		2x4	2x6	2x4	2x4	2x4	2x4	2x4
	Lower frame				2x4						2x4		2x4				2x4		2x4				2x4	2x4	2x4
	Struts				2x4						2x4		2x4				2x4	1x6	2x4				2x4	2x4	2x4
	Diagonal			1x6	2x4	1x6	1x6			1x6	2x4	1x6	2x4			1x6	2x4	1x6	2x4			1x6	2x4	2x4	2x4
16	Upper frame	2x6			2x4			2x6	2x4	2x4	2x4	2x4	2x4	2x6	2x4	2x4	2x4		2x4	2x6	2x4	2x4	2x4	2x4	2x4
	Lower frame				2x4						2x4		2x4				2x4		2x4				2x4	2x4	2x4
	Struts				2x4						2x4	1x6	2x4				2x4	1x6	2x4		1x6		2x4	2x4	2x4
	Diagonal			1x6	2x4	1x6	1x6			1x6	2x4	1x6	2x4			1x6	2x4	1x6	2x4		1x6	1x6	2x4	2x4	2x4
20	Upper frame	2x6	1x6		2x4			2x6	2x4	2x4	2x4	2x4	1x6	2x6	2x4	2x4	2x4	2x4	2x4	2x6	2x4	2x4	2x4	2x4	2x4
	Lower frame				2x4						2x4					2x4	2x4	2x4	2x4			2x4	2x4	2x4	2x4
	Struts				2x4						2x4	1x6	1x6			2x4	2x4	2x4	2x4		1x6	2x4	2x4	2x4	2x4
	Diagonal			1x6	2x4	1x6	1x6			1x6	2x4	1x6	1x6		1x6	2x4	2x4	2x4	2x4		1x6	2x4	2x4	2x4	2x6

Downloaded from http://www.everyspec.com

TABLE XVII. Panel member selection table for 8,000 pounds, net load. (cont'd)

Length (ft.)	Members	4 ft. width Height (ft.) 2	4	6	8	10	12	6 ft. width Height (ft.)[1/] 2	4	6	8	10	12	8 ft. width Height (ft.)[1/] 2	4	6	8	10	12	10 ft. width Height (ft.) 2	4	6	8	10	12
24	Upper frame	2x6	2x6	1x6	2x4		2x4	2x6	2x6	2x4	2x4	2x4	2x4	2x6	2x6	2x4	2x4	2x4	2x4	2x6	2x6	2x4	2x4	2x4	2x4
	Lower frame	1x6			2x4		2x4	1x6			2x4	2x4	2x4	1x6		2x4	2x4	2x4	2x4	1x6		2x4	2x4	2x4	2x4
	Struts	1x6			2x4	1x6	2x4	1x6			2x4	2x4	2x4	1x6	1x6	2x4	2x4	2x4	2x4	1x6	1x6	2x4	2x4	2x4	2x4
	Diagonal	1x6		1x6	2x4	1x6	2x4	1x6	1x6	1x6	2x4	2x4	2x4	1x6	1x6	2x4	2x4	2x4	2x4	1x6	1x6	2x4	2x6	2x6	2x6
28	Upper frame	2x6	2x6	2x4	2x4	2x4	2x4	2x6	2x6	2x4	2x4	2x4	2x4	2x6	2x6	2x6	2x4	1x6	1x6	2x6	2x6	2x6	2x6	2x4	2x4
	Lower frame	1x6		2x4	2x4	2x4	2x4	1x6		2x4	2x4	2x4	2x4	1x6		2x4	2x4	2x4	2x4	1x6		2x4	2x4	2x4	2x4
	Struts	1x6		2x4	2x4	2x4	2x4	1x6		2x4	2x4	2x4	2x4	1x6	1x6	2x4	2x4	2x4	2x4	1x6	1x6	2x4	2x4	2x4	2x4
	Diagonal	1x6		2x4	2x4	2x4	2x4	1x6	1x6	2x4	2x4	2x4	2x6	1x6	1x6	2x4	2x4	2x4	2x6	1x6	1x6	2x4	2x6	2x6	2x6
32	Upper frame	2x8	2x8	1x6	2x4		2x4	2x8	2x8	2x6	2x4	2x4	2x4	2x8	2x8	2x6	2x6	2x4	2x4	2x8	2x8	2x6	2x6	2x4	2x4
	Lower frame	1x8			2x4		2x4	1x8		2x4	2x4	2x4	2x4	1x8		2x4	2x4	2x4	2x4	1x8		2x4	2x4	2x4	2x4
	Struts	1x8			2x4		2x4	1x8		2x4	2x4	2x4	2x4	1x8	1x6	2x4	2x4	2x4	2x4	1x8	1x6	2x4	2x4	2x4	2x4
	Diagonal	1x8		1x6	2x4	1x6	2x4	1x8	1x6	2x4	2x4	2x4	2x4	1x8	1x6	2x4	2x6	2x6	2x6	1x8	1x6	2x4	2x6	2x6	2x6

1/ Crates 12 feet high in 6-foot widths and crates 10 feet high in 8-foot widths require 2x4 vertical joist supports when struts are 1 inch thick; all other sizes use horizontal joist supports.
Note. All blank spaces are 1x4's.

Downloaded from http://www.everyspec.com

TABLE XVIII. Panel member selection table for 10,000 pounds, net load.

Length (ft.)	Members	4 ft. width Height (ft.) 2	4	6	8	10	12	6 ft. width Height (ft.)[1/] 2	4	6	8	10	12	8 ft. width Height (ft)[1/] 2	4	6	8	10	12	10 ft. width Height (ft.) 2	4	6	8	10	12
6	Upper frame				2x4		2x4	2x4	2x4	2x4	2x4	2x4	2x4	2x4	2x4	2x4	2x4		2x4	2x4	2x4	2x4	2x4	2x4	2x4
	Lower frame				2x4		2x4				2x4		2x4			2x4	2x4		2x4			2x4	2x4	2x4	2x4
	Struts				2x4	1x6	2x4			1x6	2x4	1x6	2x4		1x6	2x4	2x4	1x6	2x4		1x6	2x4	2x4	2x4	2x4
	Diagonal			1x6	2x4	1x6	2x4			1x6	2x4	1x6	2x4			2x4	2x4	1x6	2x4		1x6	2x4	2x4	2x4	2x4
8	Upper frame	1x6		2x4	2x4		2x4	2x4	2x4	2x4	2x4	2x4	2x4	2x4	2x4	2x4	2x4		2x4	2x4	2x4	2x4	2x4	2x4	2x4
	Lower frame			2x4	2x4		2x4			2x4	2x4		2x4			2x4	2x4		2x4			2x4	2x4	2x4	2x4
	Struts			2x4	2x4	1x6	2x4			2x4	2x4	1x6	2x4		1x6	2x4	2x4	1x6	2x4		1x6	2x4	2x4	2x4	2x4
	Diagonal		1x6	2x4	2x4	1x6	2x4	1x6	1x6	2x4	2x4	1x6	2x4	1x6	1x6	2x4	2x4	1x6	2x4	1x6	1x6	2x4	2x4	1x6	2x6
10	Upper frame	1x6			2x4		2x4	2x4	2x4	2x4	2x4	2x4	2x4	2x4	2x4	2x4	2x4		2x4	2x4	2x4	2x4	2x4	2x4	2x4
	Lower frame				2x4		2x4				2x4		2x4				2x4		2x4			2x4	2x4	2x4	2x4
	Struts			1x6	2x4	1x6	2x4			1x6	2x4	1x6	2x4			1x6	2x4	1x6	2x4			2x4	2x4	2x4	2x4
	Diagonal		1x6	1x6	2x4	1x6	2x4	1x6	1x6	1x6	2x6	1x6	2x4	1x6	1x6	1x6	2x6	1x6	2x4	1x6	1x6	2x4	2x6	2x4	2x4
12	Upper frame	2x6			2x4		2x4	2x6	2x4	2x4	2x4	2x4	2x4	2x6	2x4	2x4	2x4	2x4	2x4	2x6	2x4	2x4	2x4	2x4	2x4
	Lower frame				2x4		2x4			2x4	2x4	2x4	2x4			2x4	2x4	2x4	2x4			2x4	2x4	2x4	2x4
	Struts			1x6	2x4	1x6	2x4			2x4	2x4	2x4	2x4			2x4	2x4	2x4	2x4			2x4	2x4	2x4	2x4
	Diagonal		1x6	1x6	2x4	1x6	2x4	1x6	1x6	2x4	2x4	2x4	2x4	1x6	1x6	2x4	2x4	2x4	2x4	1x6	1x6	2x4	2x4	2x4	2x4
16	Upper frame	2x8	1x6		2x4		2x4	2x8	2x4	2x4	2x4	2x4	2x4	2x8	2x4	2x4	2x4	2x4	2x4	2x8	2x4	2x4	2x4	2x4	2x4
	Lower frame				2x4		2x4			2x4	2x4	2x4	2x4			2x4	2x4	2x4	2x4			2x4	2x4	2x4	2x4
	Struts				2x4	1x6	2x4			2x4	2x4	2x4	2x4		1x6	2x4	2x4	2x4	2x4		1x6	2x4	2x4	2x4	2x4
	Diagonal	1x6	1x6	1x6	2x4	1x6	2x4	1x6	1x6	2x4	2x4	2x4	2x4	1x6	1x6	2x4	2x6	2x4	2x4	1x6	1x6	2x4	2x6	2x6	2x4
20	Upper frame	2x8	2x4	2x4	2x4		2x4	2x8	2x6	2x4	2x4	2x4	2x4	2x8	2x6	2x4	2x4	2x4	2x4	2x8	2x6	2x4	2x4	2x4	2x4
	Lower frame	1x6		2x4	2x4		2x4	1x6		2x4	2x4	2x4	2x4	1x6		2x4	2x4	2x4	2x4	1x6	2x4	2x4	2x4	2x4	2x4
	Struts			2x4	2x4	1x6	2x4			2x4	2x4	2x4	2x4			2x4	2x4	2x4	2x6		2x4	2x4	2x4	2x4	2x6
	Diagonal	1x6		2x4	2x4	1x6	2x4	1x6	1x6	2x4	2x4	2x4	2x4	1x6	1x6	2x4	2x6	2x4	2x6	1x6	2x4	2x4	2x6	2x6	2x6

Downloaded from http://www.everyspec.com

TABLE XVIII. Panel member selection table for 10,000 pounds, net load. (cont'd)

Length (ft.)	Members	4 ft. width Height (ft.) 2	4	6	8	10	12	6 ft. width Height (ft.)[1/] 2	4	6	8	10	12	8 ft. width Height (ft.)[1/] 2	4	6	8	10	12	10 ft. width Height (ft.) 2	4	6	8	10	12
	Upper frame	2x8	2x6	2x4	2x4	2x4	2x4	2x8	2x6	2x6	2x4	2x4	2x4	2x8	2x6	2x6	2x4	2x4	2x4	2x8	2x8	2x6	2x4	2x4	2x4
24	Lower frame	1x8		2x4	2x4	2x4	2x4	1x8		2x4	2x4	2x4	2x4	1x8		2x4	2x4	2x4	2x4	1x8	2x4	2x4	2x4	2x4	2x4
	Struts	1x8		2x4	2x4	2x4	2x4	1x8	1x6	2x4	2x4	2x4	2x4	1x8	1x6	2x4	2x4	2x6	2x6	1x8	2x4	2x4	2x4	2x4	2x6
	Diagonal	1x8	1x6	2x4	2x4	2x4	2x4	1x8	1x6	2x4	2x6	2x6	2x6	1x8	1x6	2x4	2x6	2x6	2x6	1x8	2x4	2x4	2x6	2x6	2x6
	Upper frame	2x8	2x6	2x4	2x4	2x4	2x4	2x8	2x6	2x6	2x4	2x4	2x4	2x8	2x8	2x6	2x6	2x4	2x4	2x8	2x8	2x6	2x6	2x4	2x4
28	Lower frame	1x8		2x4	2x4	2x4	2x4	1x8		2x4	2x4	2x4	2x4	1x8	2x4	2x4	2x4	2x4	2x4	1x8	2x4	2x4	2x4	2x4	2x4
	Struts	1x8		2x4	2x4	2x4	2x4	1x8		2x4	2x4	2x4	2x4	1x8	2x4	2x4	2x4	2x4	2x4	1x8	2x4	2x4	2x4	2x4	2x4
	Diagonal	1x8	1x6	2x4	2x4	2x4	2x4	1x8	1x6	2x4	2x6	2x6	2x6	1x8	2x4	2x4	2x6	2x6	2x6	1x8	2x4	2x4	2x6	2x6	2x6
	Upper frame	2x8	2x8	2x6	2x6	2x4	2x4	2x8	2x8	2x6	2x6	2x4	2x4	2x10	2x10	2x6	2x6	2x4	2x4	2x10	2x10	2x6	2x6	2x4	2x4
32	Lower frame	1x8		2x4	2x4	2x4	2x4	1x8		2x4	2x4	2x4	2x4	2x6	2x4	2x4	2x4	2x4	2x4	2x6	2x4	2x4	2x4	2x4	2x4
	Struts	1x8	1x6	2x4	2x4	2x4	2x4	1x8	1x6	2x4	2x4	2x4	2x4	2x4	2x4	2x4	2x4	2x4	2x4	2x4	2x4	2x4	2x4	2x4	2x4
	Diagonal	2x8	1x6	2x4	2x6	2x4	2x6	2x8	1x6	2x4	2x6	2x6	2x6	2x8	2x4	2x4	2x6	2x6	2x6	2x8	2x4	2x6	2x6	2x6	2x6

[1/] Crates 12 feet high in 6-foot widths and crates 10 feet high in 8-foot widths require 2x4 vertical joist supports when struts are 1 inch thick; all other sizes use horizontal joist supports.
Note. All blank spaces are 1x4's.

Downloaded from http://www.everyspec.com

TABLE XIX. Panel member selection table 15,000 pounds, net.[1/]

Length (ft.)	Members	4 ft. width Height (ft.) 4	6	8	10	12	6 ft. width Height (ft.) 4	6	8	10	12	8 ft. width Height (ft.) 4	6	8	10	12	10 ft. width Height (ft.) 4	6	8	10	12
6	Upper frame																				
	Lower frame																				
	Struts														2x6	2x6			2x6	2x6	2x6
	Diagonal			2x6	2x6	2x6			2x6	2x6	2x6		2x6	2x6	2x6	2x6		2x6	2x6	2x6	2x6
8	Upper frame																				
	Lower frame																				
	Struts									2x6	2x6			2x6	2x6	2x6		2x6	2x6	2x6	2x6
	Diagonal		2x6	2x6		2x6		2x6	2x6		2x6		2x6	2x6		2x6		2x6	2x6	2x6	2x6
10	Upper frame																				
	Lower frame																				
	Struts								2x6	2x6	2x6			2x6	2x6	2x6		2x6	2x6	2x6	2x6
	Diagonal		2x6	2x6	2x6			2x6	2x6	2x6	2x6		2x6	2x6	2x6	2x6		2x6	2x6	2x6	2x6
12	Upper frame																				
	Lower frame																				
	Struts					2x6			2x6	2x6	2x6		2x6	2x6	2x6	2x6		2x6	2x6	2x6	2x6
	Diagonal			2x6	2x6	2x6		2x6	2x6	2x6	2x6		2x6	2x6	2x6	2x6	2x6	2x6	2x6	2x6	2x6
16	Upper frame											2x6					2x6				
	Lower frame																				
	Struts				2x6	2x6			2x6	2x6	2x6			2x6	2x6	2x6			2x6	2x6	2x6
	Diagonal			2x6	2x6	2x6			2x6	2x6	2x6	2x6	2x6	2x6	2x6	2x6	2x6	2x6	2x6	2x6	2x6
20	Upper frame	2x6					2x6					2x6					2x6				
	Lower frame																				
	Struts				2x6	2x6				2x6	2x6				2x6	2x6				2x6	2x6
	Diagonal		2x6	2x6	2x6	2x6	2x6	2x6	2x6	2x6	2x6	2x6	2x6	2x6	2x6	2x6	2x6	2x6	2x6	2x6	2x6

Downloaded from http://www.everyspec.com

TABLE XIX. Panel member selection table 15,000 pounds, net. [1/] (cont'd)

Length (ft.)	Members	4 ft. width					6 ft. width					8 ft. width					10 ft. width				
		Height (ft.)					Height (ft.)					Height (ft.)					Height (ft.)				
		4	6	8	10	12	4	6	8	10	12	4	6	8	10	12	4	6	8	10	12
	Upper frame	2x8	2x8				2x8	2x6				2x8	2x6	2x6	2x6		2x8	2x6	2x6	2x6	2x6
24	Lower frame	2x6	2x6				2x6					2x6					2x6				
	Struts				2x6	2x6				2x6	2x6		2x6		2x6	2x6		2x6		2x6	2x6
	Diagonal		2x6	2x6	2x6	2x6	2x6	2x6	2x6	2x6	2x6	2x6	2x6	2x6	2x6	2x6	2x6	2x6	2x6	2x6	2x8
	Upper frame	2x10	2x6	2x8			2x10	2x8	2x8			2x10	2x8	2x6	2x6	2x8	2x10	2x8	2x6	2x6	2x6
28	Lower frame	2x6					2x6					2x6					2x6				
	Struts								2x6					2x6					2x6		
	Diagonal	2x6	2x6	2x6	2x6	2x6	2x6	2x6	2x6	2x6	2x6	2x6	2x6	2x6	2x6	2x6	2x6	2x6	2x6	2x6	2x8
	Upper frame	2x10	2x6	2x6			2x10	2x8	2x8			2x10	2x8	2x8	2x6	2x8	2x10	2x8	2x6	2x6	2x6
32	Lower frame	2x8					2x8					2x8					2x8				
	Struts	2x6							2x8					2x8			2x8		2x8		
	Diagonal	2x6	2x6	2x6	2x6	2x6	2x6	2x6	2x6	2x6	2x6	2x6	2x6	2x6	2x6	2x8	2x6	2x6	2x8	2x8	2x8

[1/] The above sizes are for uniform loads, but apply also to concentrated loads.
Note. All blank spaces are 2x4's.

Downloaded from http://www.everyspec.com

TABLE XX. Panel member selection table 20,000 pounds net.[1/]

Length (ft.)	Members	4 ft. width Height (ft.) 4	6	8	10	12	6 ft. width Height (ft.) 4	6	8	10	12	8 ft. width Height (ft.) 4	6	8	10	12	10 ft. width Height (ft.) 4	6	8	10	12
6	Upper frame																				
	Lower frame																				
	Struts	2x6	2x6	2x6	2x6	2x6	2x6	2x6	2x6	2x6	2x6	2x6	2x6	2x6	2x6	2x6	2x6	2x6	2x6	2x6	2x6
	Diagonal	2x6	2x6	2x6	2x6	2x6	2x6	2x6	2x6	2x6	2x6	2x6	2x6	2x6	2x6	2x6	2x6	2x6	2x6	2x6	2x6
8	Upper frame	2x6	2x6				2x6	2x6				2x6	2x6				2x6	2x6			
	Lower frame																				
	Struts	2x6	2x6	2x6	2x6	2x6	2x6	2x6	2x6	2x6	2x6	2x6	2x6	2x6	2x6	2x6	2x6	2x6	2x6	2x6	2x6
	Diagonal	2x6	2x6	2x6	2x6	2x6	2x6	2x6	2x6	2x8	2x8	2x6	2x6	2x8	2x6	2x8	2x6	2x8	2x8	2x6	2x8
10	Upper frame	2x6	2x6	2x6			2x6	2x6	2x6			2x6	2x6	2x6			2x6	2x6	2x6		
	Lower frame																				
	Struts		2x6	2x6	2x6	2x6		2x6	2x6	2x6	2x6		2x6	2x6	2x6	2x6		2x6	2x6	2x6	2x6
	Diagonal	2x6	2x6	2x6	2x6	2x6	2x6	2x6	2x8	2x6	2x6	2x6	2x6	2x6	2x6	2x6	2x6	2x6	2x8	2x6	2x6
12	Upper frame	2x6	2x6	2x6			2x6	2x6	2x6			2x6	2x6	2x6			2x6	2x6	2x6		
	Lower frame																				
	Struts		2x6	2x6	2x6	2x6		2x6	2x6	2x6	2x6		2x6	2x6	2x6	2x6		2x6	2x6	2x6	2x6
	Diagonal	2x6	2x6	2x6	2x6	2x6	2x6	2x6	2x6	2x6	2x6	2x6	2x6	2x6	2x6	2x6	2x6	2x6	2x6	2x8	2x6
16	Upper frame	2x6	2x6	2x6	2x6		2x6	2x6	2x6	2x6		2x6	2x6	2x6	2x6		2x6	2x6	2x6	2x6	
	Lower frame																				
	Struts	2x6		2x6	2x6	2x6	2x6		2x6	2x6	2x6	2x6		2x6	2x6	2x6	2x6		2x6	2x6	2x8
	Diagonal	2x6	2x6	2x6	2x6	2x6	2x6	2x6	2x8	2x6	2x6	2x6	2x6	2x8	2x8	2x6	2x6	2x6	2x8	2x8	2x6
20	Upper frame	2x8	2x6	2x6	2x6	2x6	2x8	2x6	2x6	2x6	2x6	2x8	2x6	2x6	2x6	2x6	2x8	2x6	2x6	2x6	2x6
	Lower frame																				
	Struts				2x6	2x6				2x6	2x6				2x6	2x8				2x8	2x8
	Diagonal	2x6	2x6	2x6	2x6	2x6	2x6	2x6	2x6	2x6	2x6	2x6	2x6	2x8	2x6	2x8	2x6	2x6	2x8	2x8	2x8

Downloaded from http://www.everyspec.com

TABLE XX. Panel member selection table 20,000 pounds, net.[1/] (cont'd)

Length (ft.)	Members	4 ft. width					6 ft. width					8 ft. width					10 ft. width				
		Height (ft.)					Height (ft.)					Height (ft.)					Height (ft.)				
		4	6	8	10	12	4	6	8	10	12	4	6	8	10	12	4	6	8	10	12
24	Upper frame	2x10	2x8	2x6	2x6	2x6	2x10	2x8	2x6	2x6	2x6	2x10	2x8	2x6	2x6	2x6	2x10	2x8	2x6	2x6	2x6
	Lower frame						2x6					2x6					2x6				
	Struts	2x6	2x6		2x6	2x6	2x6	2x6		2x6	2x6	2x6	2x6		2x6	2x8	2x8	2x8		2x8	2x8
	Diagonal	2x6	2x6	2x8	2x6	2x6	2x6	2x6	2x8	2x8	2x6	2x6	2x6	2x8	2x8	2x8	2x6	2x6	2x8	2x8	2x8
28	Upper frame	2x10	2x8	2x8	2x6	2x6	2x10	2x8	2x8	2x6	2x6	2x10	2x8	2x8	2x6	2x6	2x10	2x8	2x8	2x6	2x6
	Lower frame						2x8					2x8					2x8				
	Struts			2x8					2x8					2x8					2x8		
	Diagonal	2x6	2x6	2x6	2x6	2x6	2x6	2x6	2x8	2x8	2x8	2x6	2x6	2x8	2x8	2x8	2x6	2x6	2x8	2x8	2x8
32	Upper frame	2x10	2x8	2x8	2x6	2x6	2x10	2x8	2x8	2x6	2x6	2x10	2x8	2x8	2x6	2x6	2x10	2x10	2x10	2x6	2x6
	Lower frame																				
	Struts			2x8					2x8					2x8					2x8		
	Diagonal	2x6	2x6	2x8	2x6	2x8	2x6	2x6	2x8	2x8	2x8	2x6	2x8	2x8	2x8	2x8	2x6	2x8	2x8	2x8	

1/ The above sizes are for uniform loads, but apply also to concentrated loads.
Note. All blank spaces are 2x4's.

Downloaded from http://www.everyspec.com

TABLE XXI. Panel member selection table 25,000 pounds, net.[1/]

Length (ft.)	Members	4 ft. width					6 ft. width					8 ft. width					10 ft. width				
		Height (ft.)					Height (ft.)					Height (ft.)					Height (ft.)				
		4	6	8	10	12	4	6	8	10	12	4	6	8	10	12	4	6	8	10	12
6	Upper frame	2x6	2x6				2x6	2x6				2x6	2x6				2x6	2x6			
	Lower frame																				
	Struts	2x6	2x6	2x6	2x6	2x6	2x6	2x6	2x6	2x6	2x8		2x6	2x6	2x8	2x8	2x8	2x6	2x6	2x8	2x8
	Diagonal	2x6	2x8	2x8	2x8	2x8	2x6	2x8	2x8	2x8	2x8	2x6	2x8	2x8	2x8	2x8	2x6	2x8	2x8	2x8	2x8
8	Upper frame	2x6	2x6	2x6			2x6	2x6	2x6			2x6	2x6	2x6			2x6	2x6	2x6		
	Lower frame																				
	Struts	2x6	2x6	2x6	2x6	2x6	2x6	2x6	2x6	2x8	2x8	2x6	2x8	2x8	2x8	2x8	2x6	2x8	2x8	2x8	2x8
	Diagonal	2x6	2x8	2x8	2x6	2x8	2x6	2x8	2x8	2x6	2x8	2x6	2x8	2x8	2x6	2x8	2x6	2x8	2x8	2x6	2x10
10	Upper frame	2x6	2x6	2x6			2x6	2x6	2x6			2x6	2x6	2x6			2x6	2x6	2x6		
	Lower frame																				
	Struts		2x6	2x6	2x8	2x8		2x6	2x8	2x8	2x8		2x8	2x8	2x8	2x8		2x8	2x8	2x8	2x8
	Diagonal	2x6	2x6	2x8	2x6	2x6	2x6	2x6	2x8	2x8	2x8	2x6	2x6	2x8	2x8	2x8	2x8	2x8	2x8	2x8	2x8
12	Upper frame	2x6	2x6	2x6			2x6	2x6	2x6			2x6	2x6	2x6			2x6	2x6	2x6		
	Lower frame																				
	Struts		2x8	2x6	2x8	2x8		2x8	2x8	2x8	2x8		2x8	2x8	2x8	2x8		2x8	2x8	2x8	2x8
	Diagonal	2x6	2x8	2x8	2x8	2x8	2x6	2x8	2x8	2x8	2x8	2x6	2x8	2x8	2x8	2x8	2x8	2x8	2x8	2x8	2x8
16	Upper frame	2x6	2x6	2x6	2x6	2x6	2x6	2x6	2x6	2x6	2x6	2x8	2x6	2x6	2x6	2x6	2x8	2x6	2x6	2x6	2x6
	Lower frame																				
	Struts	2x6		2x8	2x8	2x8	2x6		2x8	2x8	2x8	2x6		2x8	2x8	2x8	2x6		2x8	2x8	2x8
	Diagonal	2x6	2x6	2x8	2x8	2x8	2x6	2x6	2x8	2x8	2x8	2x8	2x8	2x8	2x8	2x8	2x8	2x8	2x10	2x8	2x8
20	Upper frame	2x10	2x6	2x6	2x6	2x6	2x10	2x6	2x6	2x6	2x6	2x10	2x6	2x6	2x6	2x6	2x10	2x6	2x6	2x6	2x6
	Lower frame																				
	Struts				2x8	2x8				2x8	2x8				2x8	2x8				2x8	2x8
	Diagonal	2x6	2x8	2x8	2x8	2x8	2x8	2x8	2x8	2x8	2x8	2x8	2x8	2x8	2x8	2x8	2x8	2x8	2x8	2x8	2x8

Downloaded from http://www.everyspec.com

TABLE XXI. Panel member selection table 25,000 pounds, net.[1/] (cont'd)

Length (ft.)	Members	4 ft. width					6 ft. width					8 ft. width					10 ft. width				
		Height (ft.)					Height (ft.)					Height (ft.)					Height (ft.)				
		4	6	8	10	12	4	6	8	10	12	4	6	8	10	12	4	6	8	10	12
24	Upper frame	2x8	2x10	2x6	2x6	2x6	2x10	2x10	2x8	2x8	2x6	2x10	2x10	2x8	2x8	2x6	2x10	2x10	2x8	2x8	2x6
	Lower frame																				
	Struts		2x8		2x8	2x8		2x8		2x8	2x8		2x8		2x8	2x8		2x8		2x8	2x8
	Diagonal	2x6	2x8	2x8	2x8	2x8	2x8	2x8	2x10	2x8	2x8	2x8	2x8	2x10	2x10	2x8	2x8	2x8	2x10	2x10	2x10
28	Upper frame	2x10	2x10	2x10	2x6	2x6	2x10	2x10	2x10	2x8	2x6	2x10	2x10	2x10	2x8	2x6	2x10	2x10	2x10	2x8	2x6
	Lower frame																				
	Struts			2x8				2x8						2x10		2x8			2x8	2x6	2x6
	Diagonal	2x8	2x8	2x8	2x8	2x8	2x8	2x8	2x8	2x8	2x8	2x8	2x8	2x10	2x8	2x8	2x8	2x8	2x10	2x8	2x10
32	Upper frame	2x12	2x10	2x10	2x6	2x6	2x12	2x10	2x10	2x8	2x6	2x12	2x10	2x10	2x8	2x6	2x12	2x10	2x10	2x8	2x6
	Lower frame	2x6					2x6					2x6					2x6				
	Struts			2x8						2x8				2x8					2x8		
	Diagonal	2x8	2x8	2x8	2x8	2x8	2x8	2x8	2x10	2x8	2x8	2x8	2x8	2x10	2x10	2x10	2x8	2x8	2x10	2x10	2x10

[1/] The above sizes are for uniform loads, but apply also to concentrated loads.
Note. All blank spaces are 2x4's.

Downloaded from http://www.everyspec.com

TABLE XXII. Panel member selection table 30,000 pounds, net.[1/]

Length (ft.)	Members	4 ft. width, Height (ft.) 4	6	8	10	12	6 ft. width, Height (ft.) 4	6	8	10	12	8 ft. width, Height (ft.) 4	6	8	10	12	10 ft. width, Height (ft.) 4	6	8	10	12
6	Upper frame	2x6	2x6				2x6	2x6	2x8			2x6	2x6	2x6			2x6	2x6	2x6		
	Lower frame																				
	Struts	2x8	2x8	2x8	2x8	2x8	2x8	2x8	2x8	2x8	2x8	2x8	2x8	2x8	2x8	2x8	2x8	2x8	2x8	2x8	2x8
	Diagonal	2x8	2x8	2x8	2x8	2x8	2x8	2x8	2x8	2x10	2x8	2x8	2x8	2x8	2x10	2x8	2x8	2x8	2x8	2x10	2x10
8	Upper frame	2x6	2x6	2x6			2x6	2x6	2x6			2x6	2x6	2x6			2x6	2x6	2x6		
	Lower frame																				
	Struts	2x8	2x8	2x10	2x8	2x8	2x8	2x8	2x10	2x8	2x8	2x8	2x8	2x10	2x8	2x8	2x8	2x8	2x10	2x8	2x8
	Diagonal	2x8	2x10	2x10	2x8	2x10	2x8	2x10	2x10	2x8	2x10	2x8	2x10	2x10	2x8	2x10	2x8	2x10	2x10	2x8	2x10
10	Upper frame	2x6	2x6	2x6			2x6	2x6	2x6			2x6	2x6	2x6			2x6	2x6	2x6		
	Lower frame																				
	Struts		2x8	2x10	2x8	2x8		2x8	2x10	2x8	2x8		2x8	2x10	2x8	2x8		2x8	2x10	2x8	2x8
	Diagonal	2x6	2x6	2x10	2x8	2x8	2x8	2x8	2x10	2x8	2x8	2x8	2x8	2x10	2x8	2x8	2x8	2x8	2x10	2x8	2x8
12	Upper frame	2x6	2x6	2x6			2x6	2x6	2x6			2x6	2x6	2x6			2x6	2x6	2x6		
	Lower frame																				
	Struts		2x8	2x8	2x8	2x8		2x8	2x8	2x8	2x8		2x8	2x8	2x8	2x8		2x8	2x8	2x8	2x8
	Diagonal	2x8	2x8	2x8	2x10	2x10	2x8	2x8	2x8	2x10	2x10	2x8	2x8	2x10	2x10	2x10	2x8	2x8	2x10	2x10	2x10
16	Upper frame	2x8	2x6	2x6	2x6	2x6	2x8	2x6	2x6	2x6	2x6	2x8	2x6	2x6	2x6	2x6	2x8	2x6	2x6	2x6	2x6
	Lower frame																				
	Struts	2x10		2x10	2x8	2x8	2x10		2x10	2x8	2x8	2x10		2x10	2x8	2x8	2x10		2x10	2x10	2x10
	Diagonal	2x8	2x8	2x10	2x8	2x8	2x8	2x8	2x10	2x10	2x8	2x8	2x8	2x10	2x10	2x8	2x8	2x8	2x10	2x10	2x10

Downloaded from http://www.everyspec.com

TABLE XXII. Panel member selection table 30,000 pounds, net. (cont'd)

Length (ft.)	Members	4 ft. width Height (ft.) 4	6	8	10	12	6 ft. width Height (ft.) 4	6	8	10	12	8 ft. width Height (ft.) 4	6	8	10	12	10 ft. width Height (ft.) 4	6	8	10	12
20	Upper frame	2x10	2x8	2x6	2x6	2x6	2x10	2x8	2x6	2x6	2x6	2x10	2x8	2x6	2x6	2x6	2x10	2x10	2x6	2x6	2x6
	Lower frame											2x8					2x8				
	Struts				2x8	2x8				2x8	2x8			2x6	2x8	2x10			2x6	2x10	2x10
	Diagonal	2x8	2x8	2x10	2x8	2x8	2x8	2x10	2x10	2x8	2x10	2x8	2x10	2x10	2x10	2x10	2x8	2x10	2x10	2x10	2x10
24	Upper frame	2x10	2x10	2x8	2x8	2x6	2x10	2x10	2x8	2x8	2x6						2x10	2x10	2x8	2x8	2x8
	Lower frame							2x8				2x10	2x10	2x8	2x8	2x8		2x8			
	Struts		2x8	2x8	2x8	2x8		2x8	2x8	2x8	2x10		2x8	2x6	2x10			2x8	2x6	2x10	2x10
	Diagonal	2x8	2x8	2x10	2x10	2x10	2x8	2x8	2x10	2x10	2x10	2x8	2x10	2x10	2x10	2x10	2x8	2x10	2x10	2x10	2x10
28	Upper frame	2x12	2x10	2x10	2x8	2x6	2x12	2x10	2x10	2x8	2x6	2x12	2x10	2x10	2x8	2x8	2x12	2x12	2x10	2x8	2x8
	Lower frame	2x6					2x6	2x8				2x6	2x8				2x6	2x8			
	Struts			2x8		2x6			2x8	2x6	2x6		2x6	2x8	2x6	2x6		2x6	2x8	2x6	2x6
	Diagonal	2x8	2x8	2x10	2x10	2x10	2x8	2x8	2x10	2x10	2x10	2x8	2x10	2x10	2x10	2x10	2x8	2x10	2x10	2x10	2x10
32	Upper frame	2x12	2x12	2x10	2x8	2x6	2x12	2x12	2x10	2x8	2x8	2x12	2x12	2x10	2x8	2x8	2x12	2x12	2x10	2x8	2x8
	Lower frame	2x6	2x8	2x8			2x8	2x8	2x8			2x8	2x8	2x8			2x8	2x8	2x8		
	Struts			2x8	2x6	2x6			2x8	2x6	2x6		2x6	2x8	2x6	2x6		2x6	2x8	2x6	2x6
	Diagonal	2x8	2x10	2x10	2x10	2x10	2x8	2x10	2x10	2x10	2x10	2x8	2x10	2x10	2x10	2x10	2x8	2x10	2x12	2x10	2x12

1/ The above sizes are for uniform loads, but apply also to concentrated loads.
Note. All blank spaces are 2x4's.

Downloaded from http://www.everyspec.com

Downloaded from http://www.everyspec.com

TABLE XXIII. Lag bolts required to assemble sides to base of bolted crates using lag bolt reinforcing strap (skids to be Group II, III, or IV woods).[1/]

Weight of crate and contents (lb.)	Size of lag bolt		
	3/8- x 3-inch (3- x 3- or 3- x 4-inch skids	1/2- x 4-inch 4- x 4-inch skids)	5/8- x 4-inch (4- x 6-inch skids)
2,000	6	6	6
3,000	10	6	6
4,000	14	8	6
6,000	20	12	8
8,000	...	16	10
10,000	...	18	12
12,000	...	22	14
14,000	...	26	16
16,000	...	30	18
18,000	...	32	22
20,000	...	36	24
24,000	...	...	28
28,000	...	...	32
32,000	...	...	36
36,000	...	...	42
40,000	...	...	46

[1/] Use one-half the number on each side:
Maximum spacing - 3/8 x 3-16 inches on center
1/2 x 4-20 inches on center
5/8 x 4-20 inches on center
Minimum number - 3 per side, 2 per end

Downloaded from http://www.everyspec.com

TABLE XXIV. Assembly nailing of nailed crate (see figure 26).[1/]

Fasten		Nail size and spacing		
Part	To part	Lumber sheathing	Plywood sheathing	Notes
Sheathing of side and end	Skid and end header (skid base)	Eightpenny minimum size 3-inch maximum spacing	Sevenpenny minimum size 3-inch maximum spacing	See nailing table XVI for number required
	End and side sills (sill base)	2 rows up to 4x4 skids 3 rows 4x6 skid (on edge) 3 rows for all sill bases	2 rows up to 4x4 skids 3 rows for 4x6 skid (on edge) 3 rows for all sill bases	
Corner strut of end	Corner strut of side	Twentypenny-predrill 12-inch spacing	Twelvepenny 12-inch spacing	Predrill for twentypenny nails, 75 percent of shank diameter
Sheathing of side	Corner strut of end	Eightpenny minimum size 6- to 8-inch spacing	Sevenpenny minimum size 6- to 8-inch spacing	

1/ For fastening top to sides and ends use strapping as specified in 3.2.5.3 and shown in figure 27.

Downloaded from http://www.everyspec.com

TABLE XXV. Number of nails per each 1,000 pound gross load (nailing sheathing to base around perimeter of nailed crate).[1/]

Type of nail	Size of nail	Wood group of skid		
		II	III	IV
Sinker or cooler	7d	23	26	19
	8d or 9d	19	21	16
	10d	18	19	14
	12d	15	16	12
Corker	7d	24	26	19
	8d or 9d	17	19	14
	10d	15	16	12
	12d	15	16	12

1/ Nails shall not be less than 2 per board (lumber sheathing) and shall neither be more than 3 inches apart nor less than 1-1/2 inches apart.

Downloaded from http://www.everyspec.com

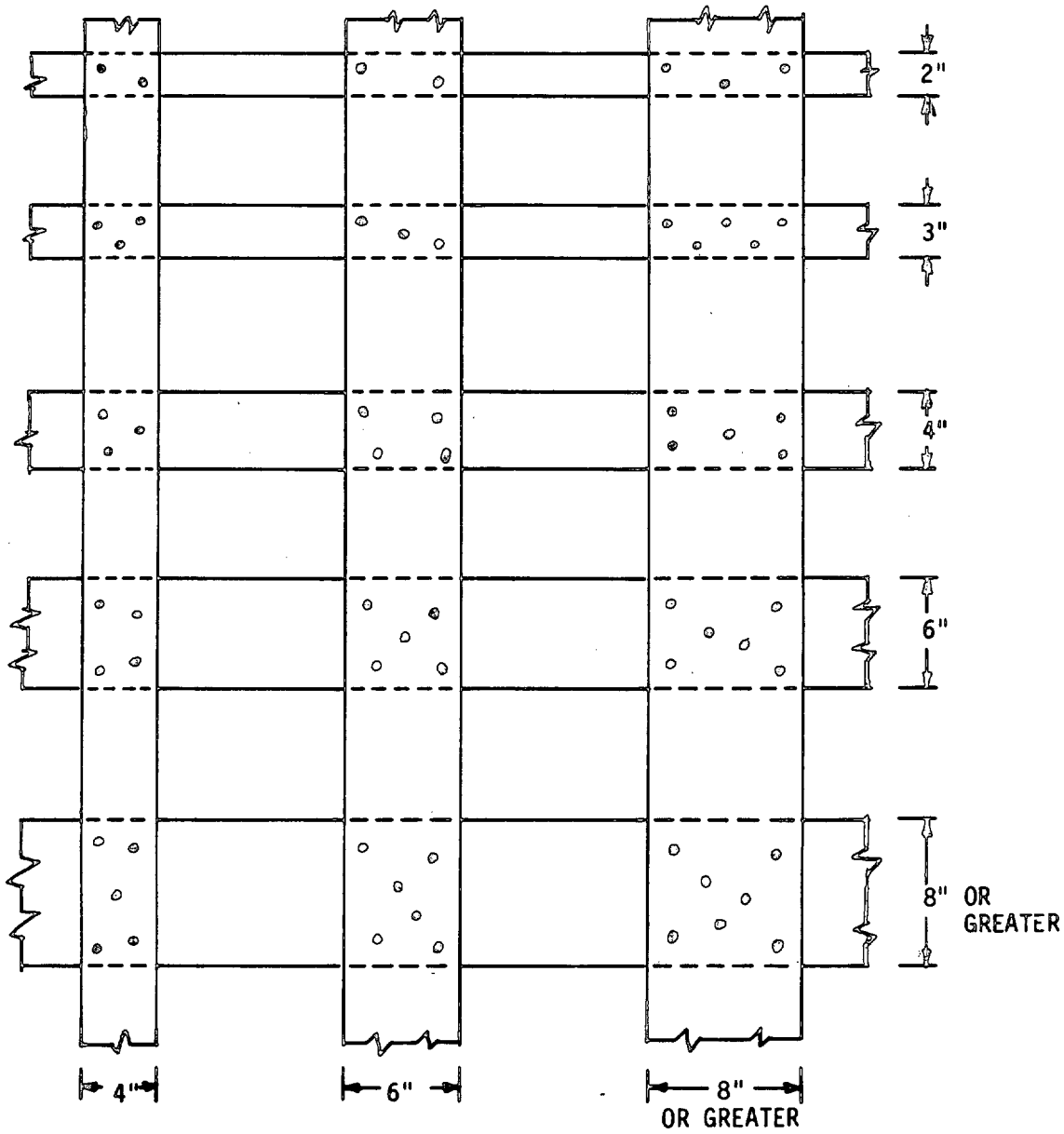

SIZES SHOWN ARE NOMINAL

NOTE: USE SIMILAR PATTERN WHEN BOARDS CROSS AT ANGLES LESS THAN 90 DEG.

FIGURE 1. Nailing schedule for boards crossing at right angles.

X-3407

Downloaded from http://www.everyspec.com

NOTES:

1. USE CARRIAGE BOLTS
2. ALL DIMENSIONS IN INCHES

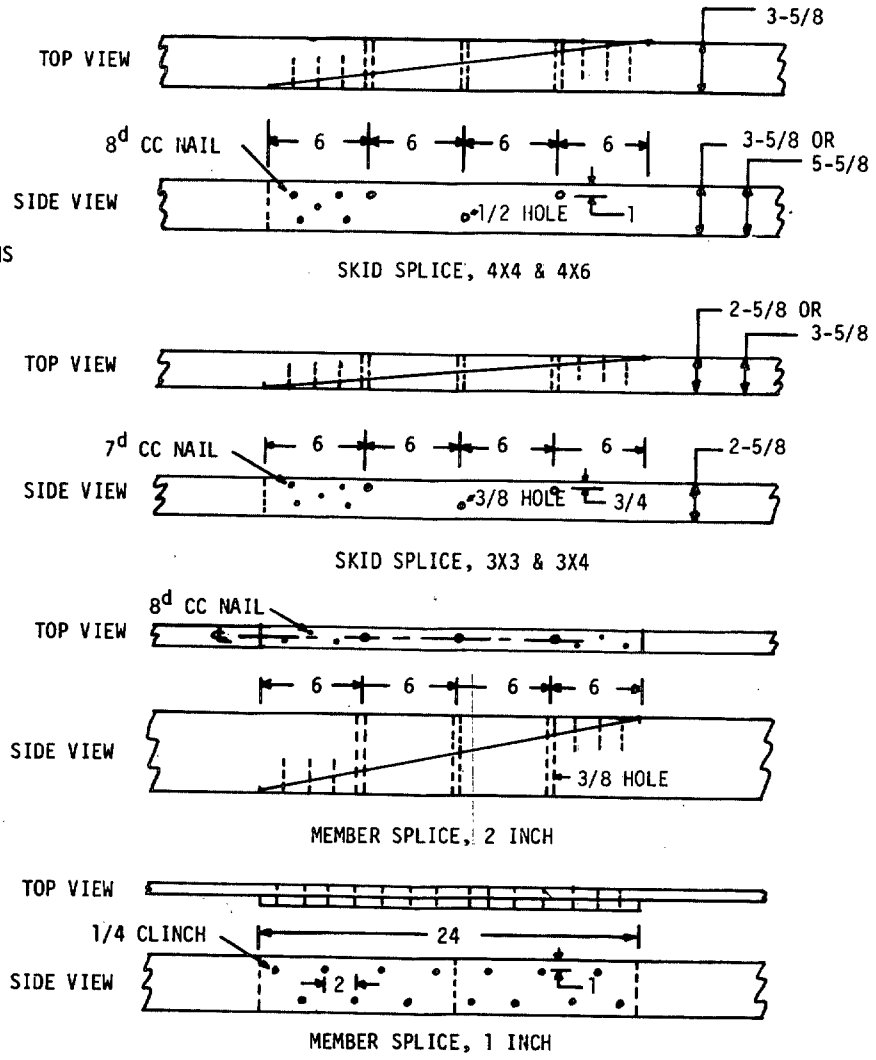

FIGURE 2. Splicing of members.

X-3408

Downloaded from http://www.everyspec.com

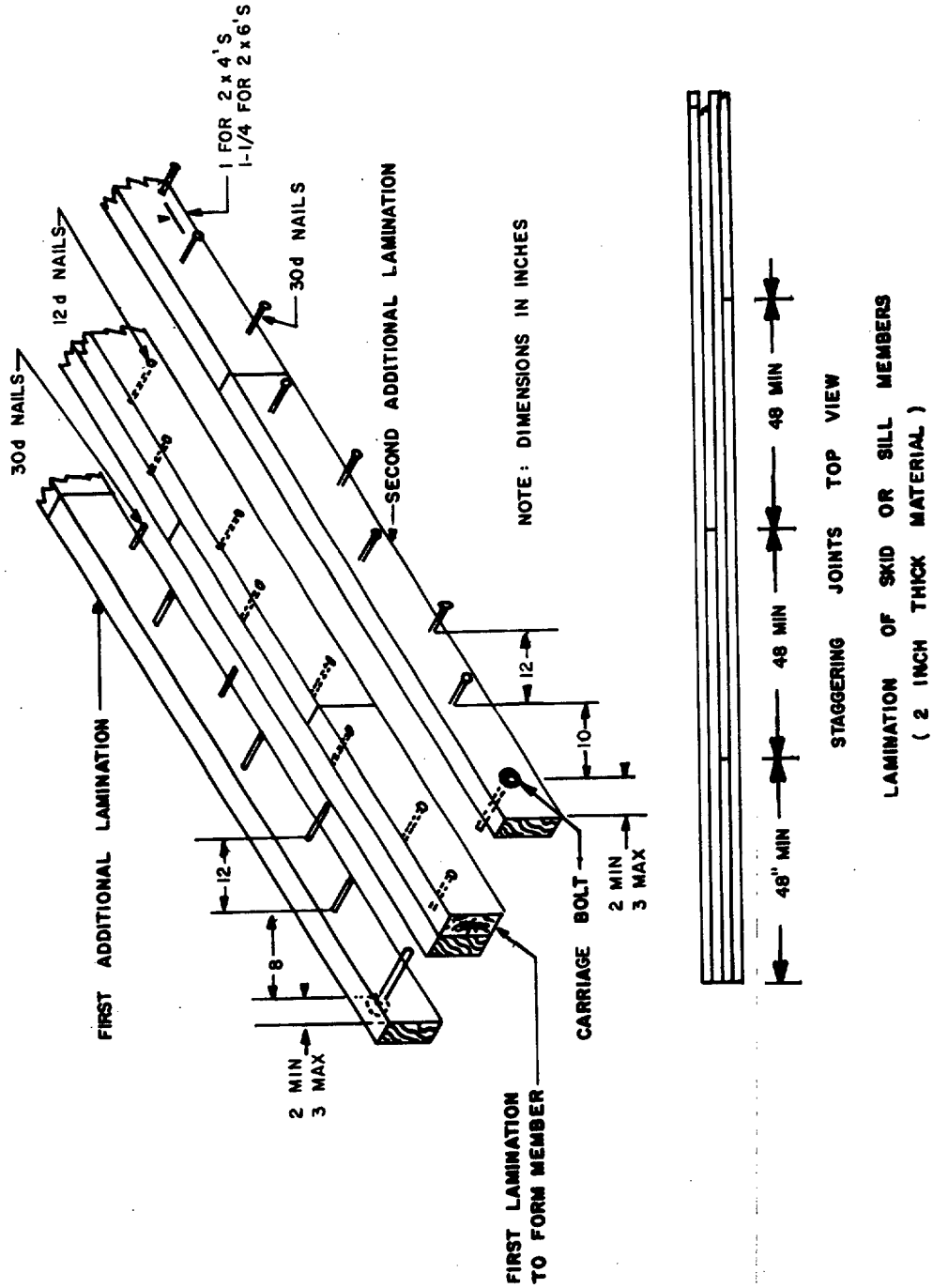

X-3409A

FIGURE 3. LAMINATING METHOD.

Downloaded from http://www.everyspec.com

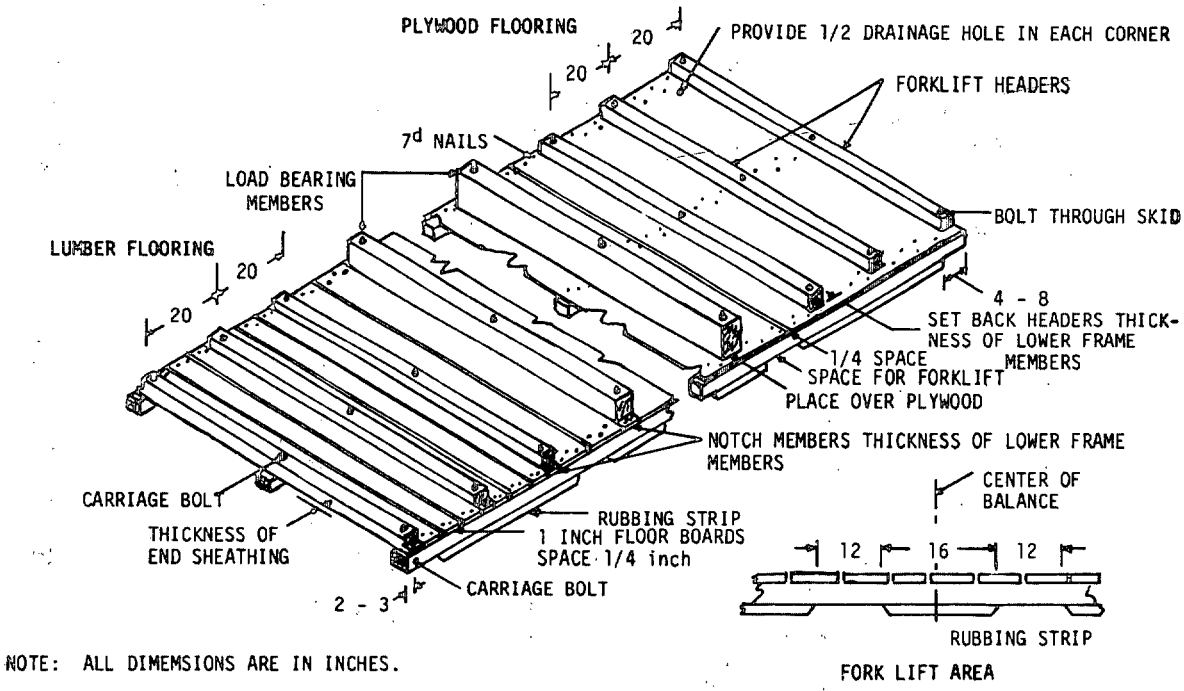

NOTE: ALL DIMEMSIONS ARE IN INCHES.

FIGURE 4. Details of skid-type base (with forklift headers).

X-3410

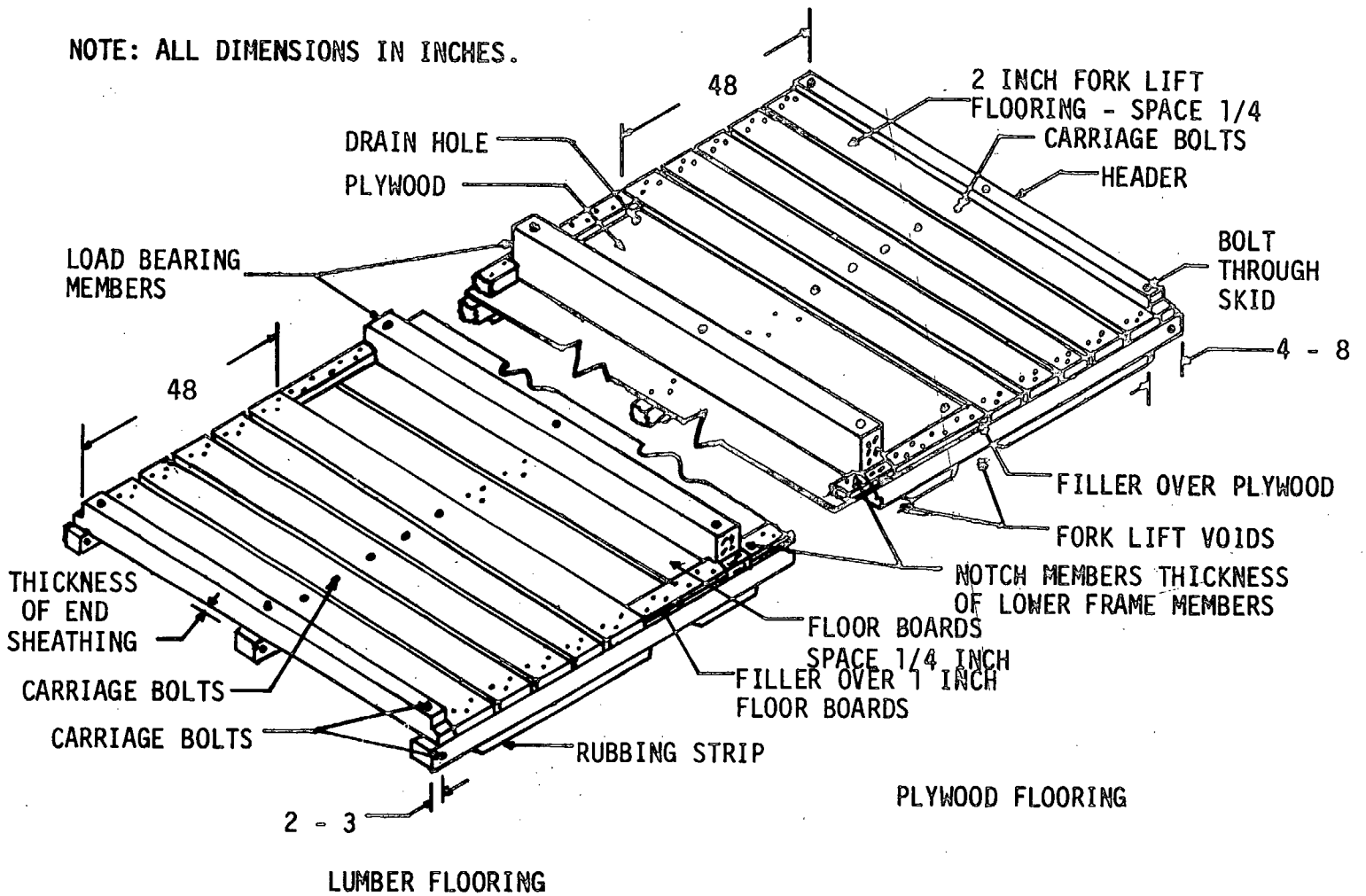

FIGURE 5. Details of skid-type base (with 2 - inch fork lift flooring).

X-3411A

Downloaded from http://www.everyspec.com

Downloaded from http://www.everyspec.com

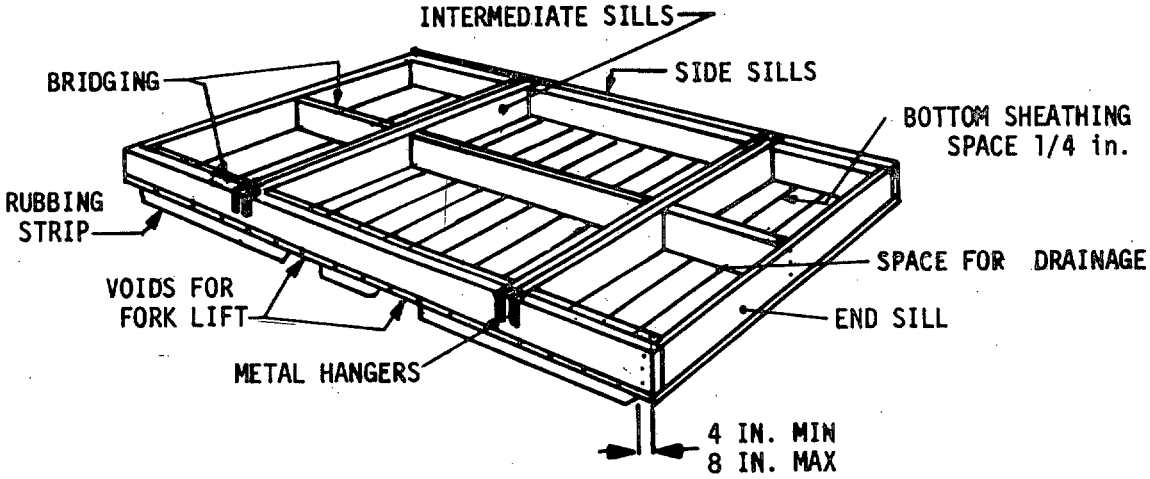

SILL BASE WITH DOUBLED SILLS

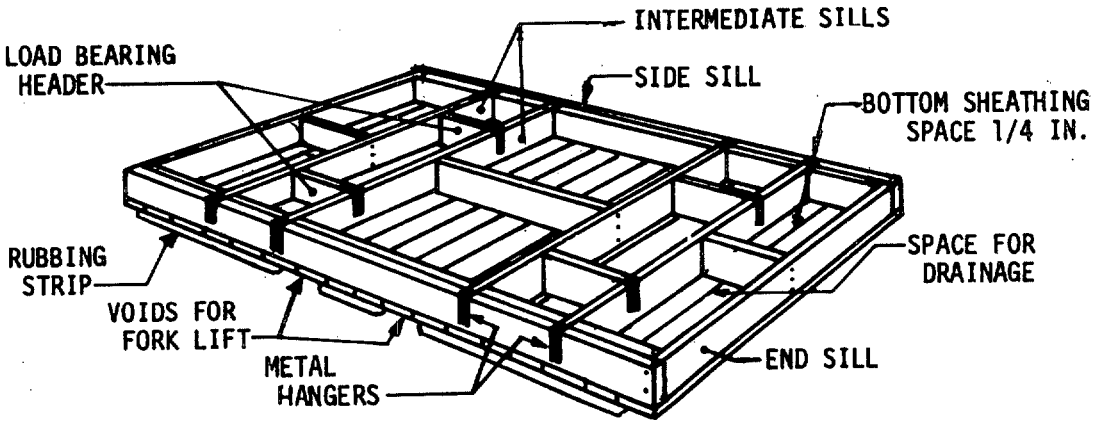

SILL BASE WITH LOAD-BEARING HEADERS

FIGURE 6. Sill-type bases.

X-3412A

Downloaded from http://www.everyspec.com

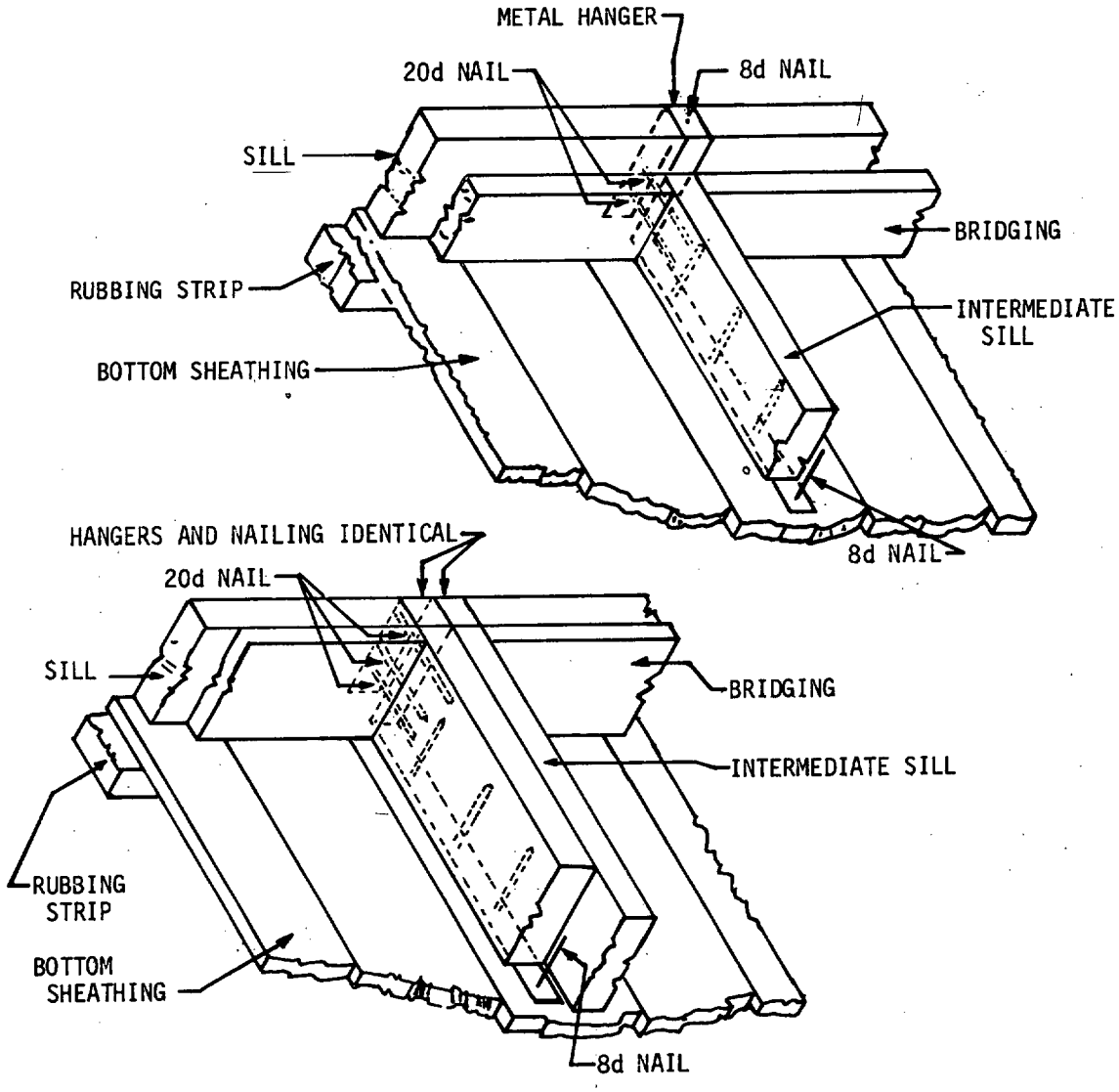

FIGURE 7. Attaching intermediate sills to side sills.

X-3413

Downloaded from http://www.everyspec.com

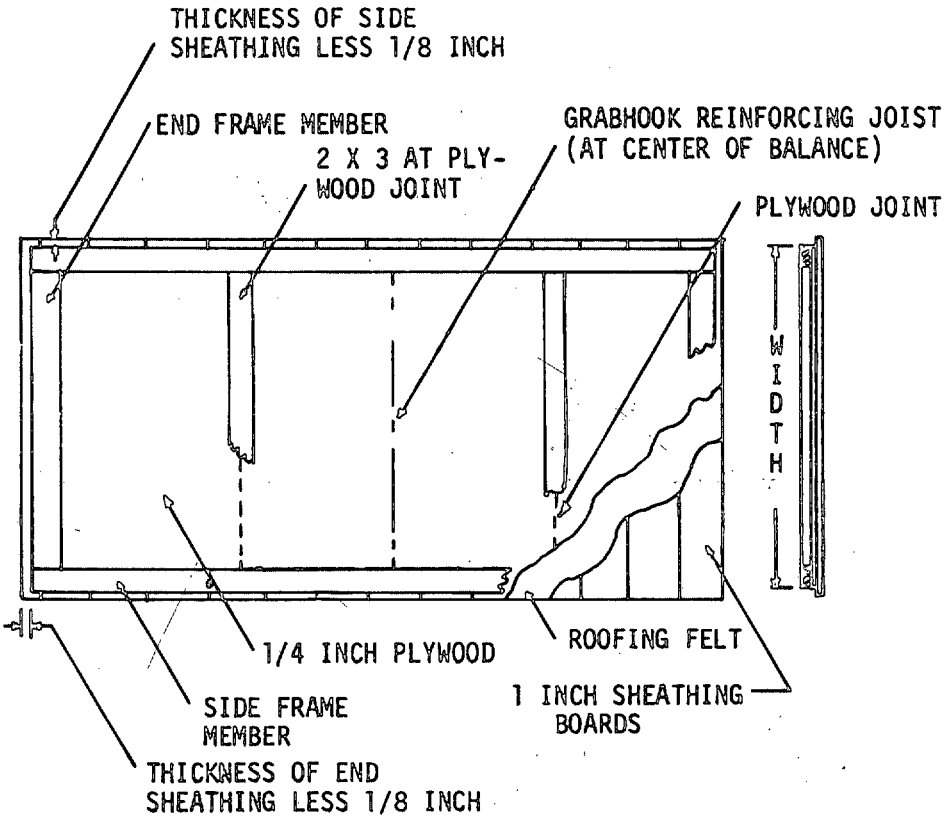

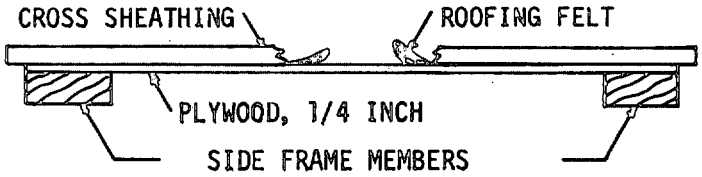

CROSS SECTION

WIDTH - UP THROUGH 54 INCH
JOISTS - NOT REQUIRED
MEMBER SIZE - 2 X 4

FIGURE 8. Narrow tops (widths up to 54 inches).

X-3414A

Downloaded from http://www.everyspec.com

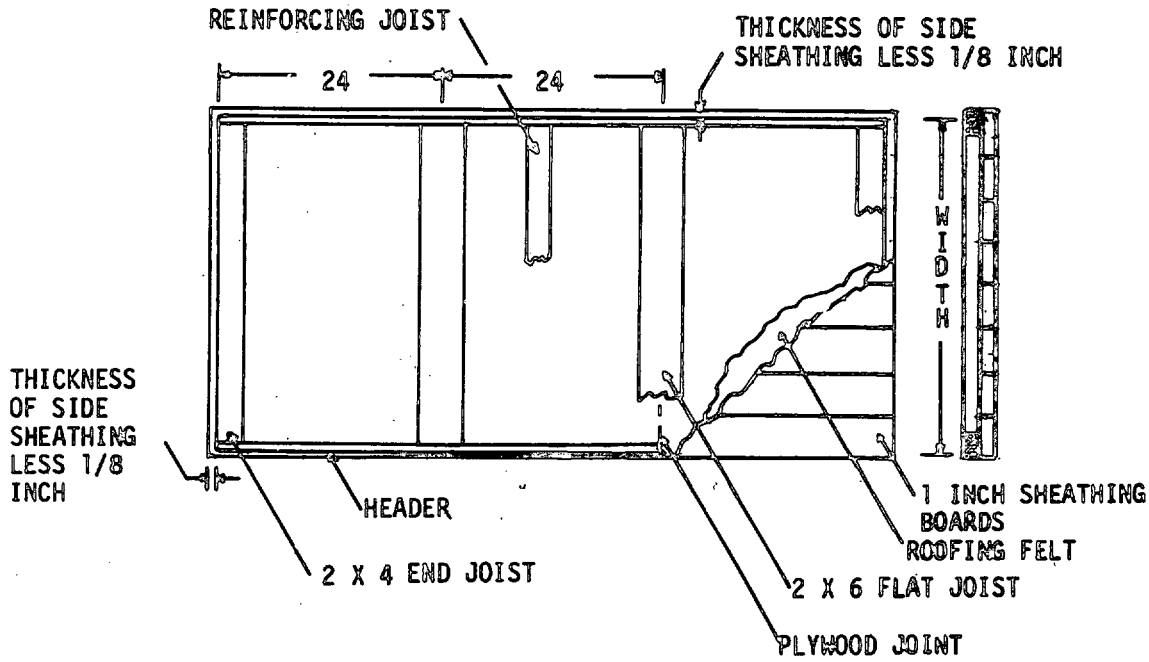

INSIDE VIEW END

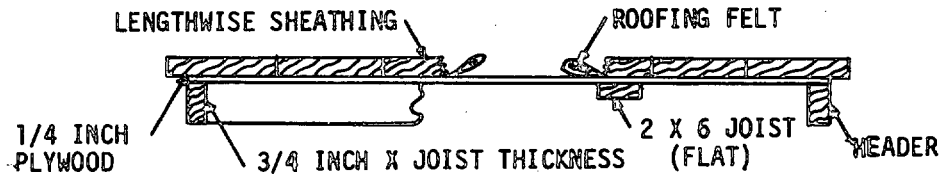

CROSS SECTION

WIDTH - OVER 54 INCH THROUGH 60 INCH
JOISTS - 2 X 6 (FLAT) 24 INCHES O. C.
2 X 4 (FLAT) END JOIST
HEADER - 3/4 INCH X JOIST THICKNESS

FIGURE 9. Intermediate tops (widths over 54 inches through 60 inches).

X-3415A

Downloaded from http://www.everyspec.com

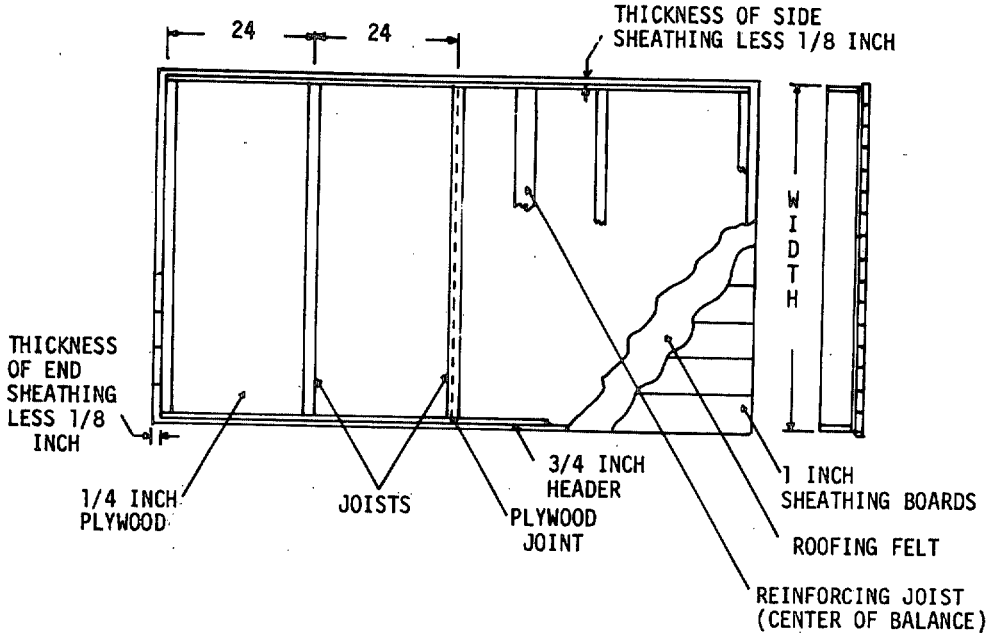

INSIDE VIEW END

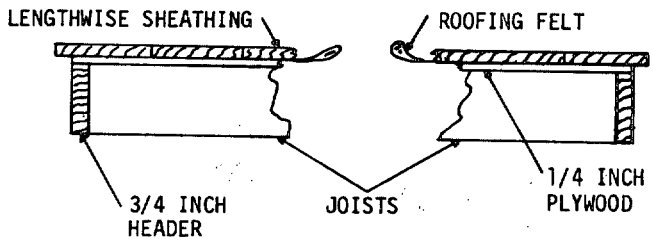

CROSS SECTION

WIDTH - OVER 60 INCHES THROUGH 120 INCHES
JOISTS (SPACE 24 INCHES O. C.)

SPAN	SIZE
OVER 60 INCHES THRU 66 INCHES	2 X 4
OVER 66 INCHES THRU 78 INCHES	2 X 4 PLUS 1 X 4 OR 3 X 4 1/
OVER 78 INCHES THRU 90 INCHES	2 - 2 X 4 OR 4 X 4 1/
OVER 90 INCHES THRU 102 INCHES	2 X 6
OVER 102 INCHES THRU 120 INCHES	2 X 6 PLUS 1 X 6 OR 3 X 6 1/

1/ END JOIST TO BE SINGLE 2 INCH MEMBER AND SAME DEPTH AS JOISTS

HEADERS - 3/4 INCH THICK AND SAME DEPTH AS JOISTS

FIGURE 10. Wide tops (widths over 60 inches through 120 inches).

X-3416A

Downloaded from http://www.everyspec.com

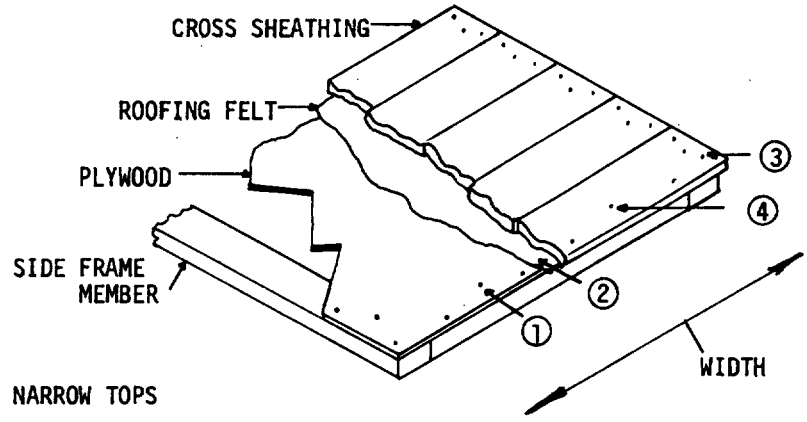

NARROW TOPS

① PLYWOOD TO FRAME MEMBERS
NAILS - 5^d CEMENT COATED
SPACING - 8 INCHES O. C.
② ROOFING FELT - 4 INCH LAP AT JOINT - USE MASTIC
③ SHEATHING THROUGH PLYWOOD INTO FRAMING MEMBER
NAILS - 8^d CEMENT COATED
SPACING - 3 INCHES O. C. (MINIMUM 2 PER BOARD)
④ AS ③ BUT SPACE 8 INCHES O. C.

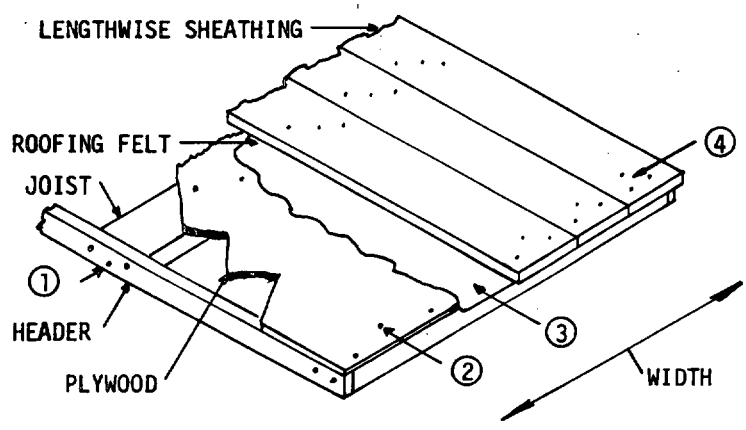

INTERMEDIATE TOPS

① HEADER TO FLAT JOIST - 12^d CEMENT COATED NAIL, SPACE 2 INCHES O. C.
② PLYWOOD TO JOIST AND HEADER - 5^d CEMENT COATED NAIL, SPACE 8 INCHES O. C.
③ ROOFING FELT - 4 INCH LAP AT JOINT - USE MASTIC
④ SHEATHING INTO JOIST - 8^d CEMENT COATED NAIL, SPACE 3 INCHES O. C.

FIGURE 11. Fabrication of tops (narrow and intermediate).

X-3417

Downloaded from http://www.everyspec.com

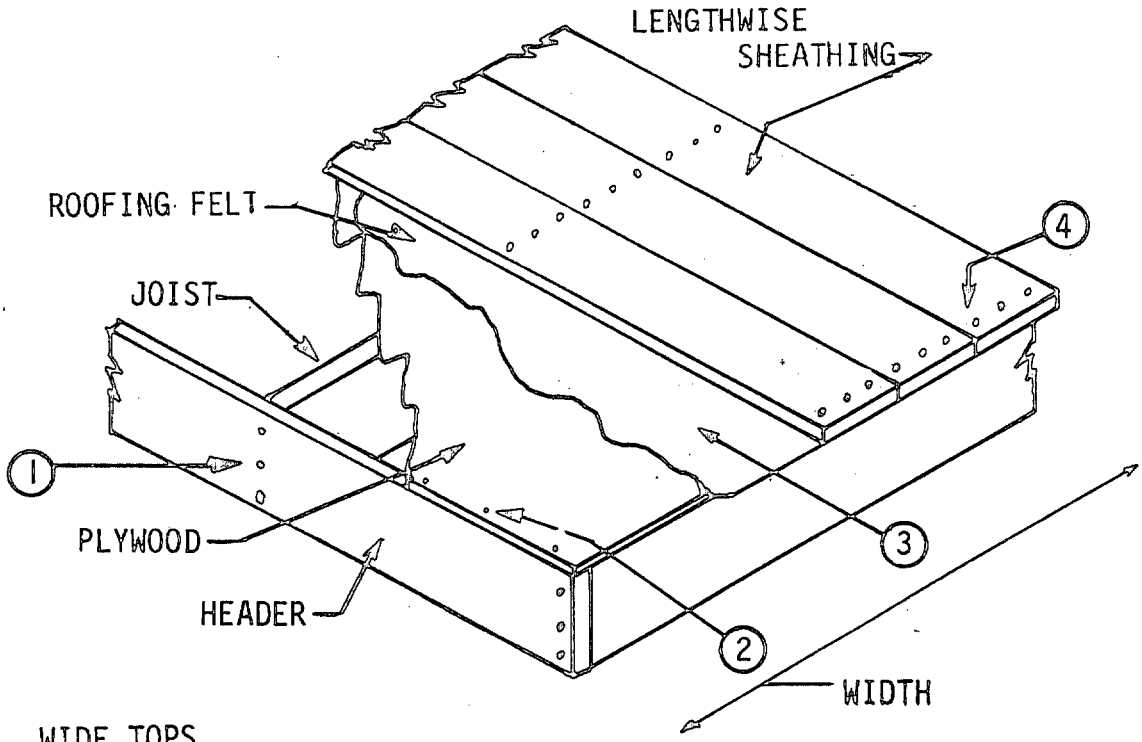

WIDE TOPS

1. HEADER TO JOIST- 12d cc NAIL
   2x4's-2 NAILS
   2x6's-3 NAILS
2. PLYWOOD TO JOIST AND HEADER-
   5d cc NAIL - SPACE 8 IN. ON CENTER
3. ROOFING FELT - 4 IN. LAP AT JOINT - USE MASTIC
4. SHEATHING INTO JOIST - 8d cc NAILS
   1x4, 1x6 - 2 NAILS PER JOIST
   1x8, 1x10 - 3 NAILS PER JOIST

FIGURE 12. Fabrication of tops (wide tops).

X-3418

Downloaded from http://www.everyspec.com

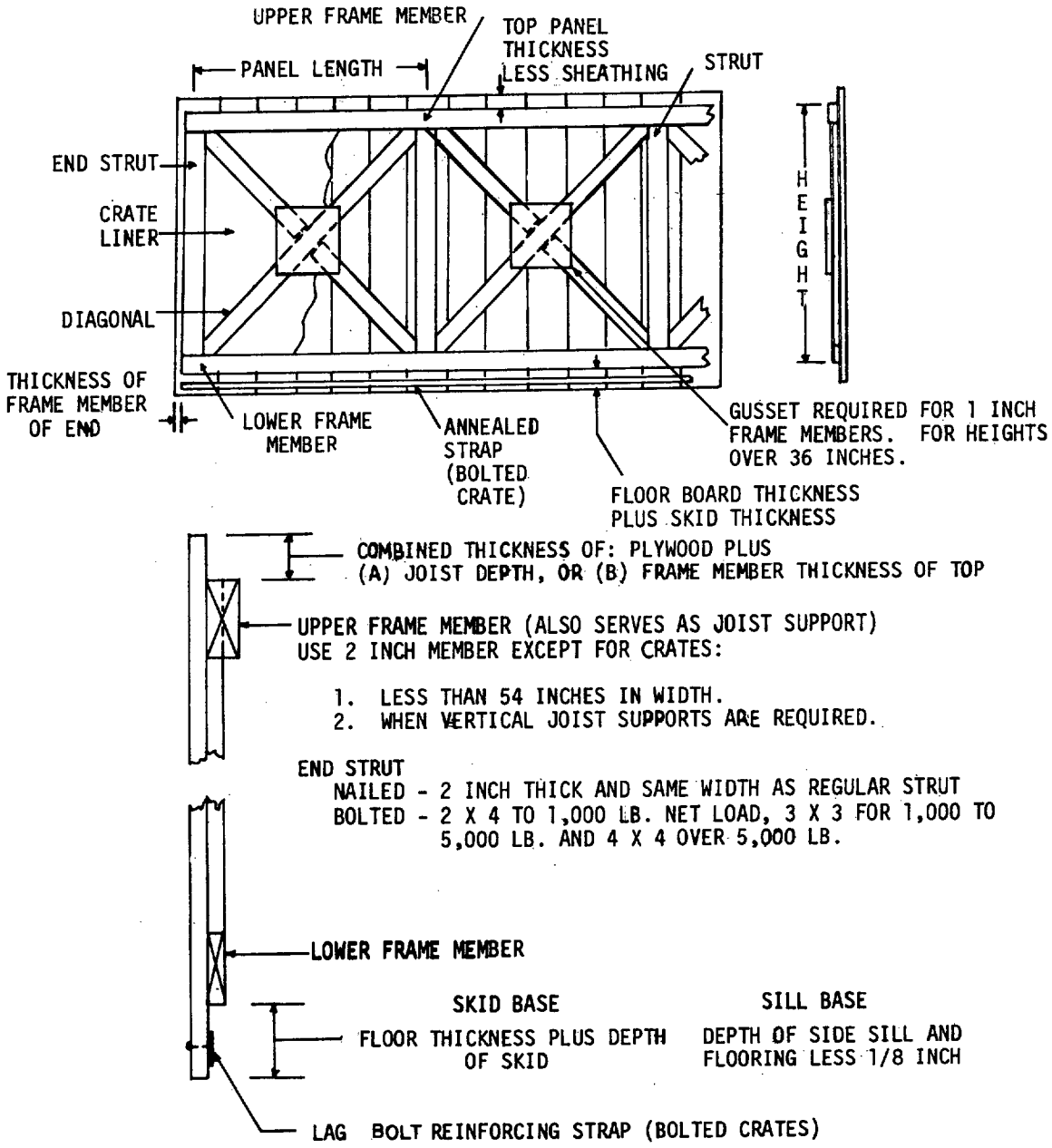

FIGURE 13. Sides - type A panel (lumber) (heights over 24 inches through 60 inches).

X-3419A

Downloaded from http://www.everyspec.com

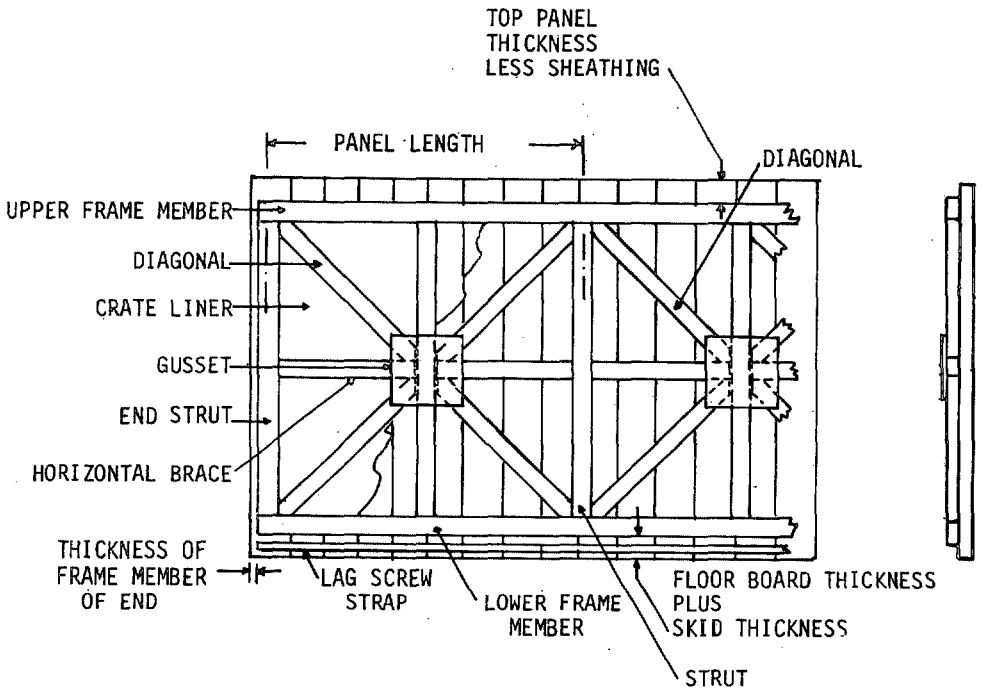

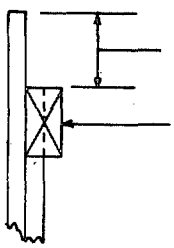

COMBINED THICKNESS OF PLYWOOD PLUS
(A) JOIST DEPTH, OR (B) FRAME MEMBER
THICKNESS OF TOP

UPPER FRAME MEMBER
USE 2 INCH MEMBER EXCEPT FOR CRATES:

1. LESS THAN 54 INCHES IN WIDTH.
2. WHEN VERTICAL JOIST SUPPORTS ARE REQUIRED.

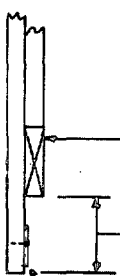

END STRUT
NAILED - 2 INCH THICK, SAME WIDTH AS REGULAR STRUT
BOLTED - 2 X 4 TO 1,000 LB. NET LOAD, 3 X 3 FOR
1,000 TO 5,000 LB. AND 4 X 4 OVER 5,000 LB.

LOWER FRAME MEMBER

SKID BASE	SILL BASE
FLOOR THICKNESS PLUS DEPTH OF SKID	DEPTH OF SIDE SILL AND FLOORING LESS 1/8 INCH

LAG BOLT REINFORCING STRAP (BOLTED CRATES)

FIGURE 14. Sides - type B panel (lumber) (heights over 60 inches through 108 inches).

X-3420A

Downloaded from http://www.everyspec.com

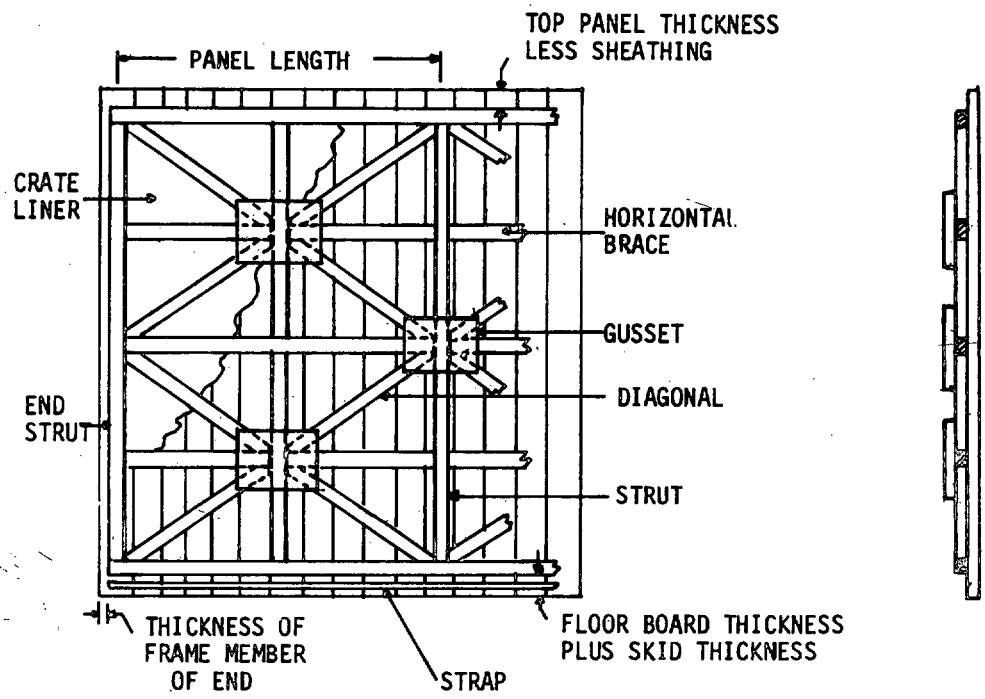

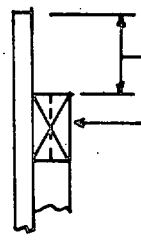

COMBINED THICKNESS OF PLYWOOD PLUS (A) JOIST DEPTH
OR (B) FRAME MEMBER THICKNESS OF TOP

UPPER FRAME MEMBER - 2 INCH THICK: USE 1 INCH WHEN TOP IS LESS THAN 54 INCHES WIDE AND 1 INCH LISTED IN MEMBER SELECTION TABLES OR WHEN VERTICAL JOIST SUPPORTS ARE REQUIRED

END STRUT
NAILED - 2 INCH THICK SAME WIDTH AS REGULAR STRUT
BOLTED - 2 X 4 TO 1,000 LB. NET LOAD, 3 X 3 FOR 1,000 TO 5,000 LB., AND 4 X 4 OVER 5,000 LB.

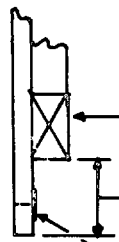

LOWER FRAME MEMBER

SKID BASE	SILL BASE
FLOOR THICKNESS PLUS DEPTH OF SKID	DEPTH OF SIDE SILL AND FLOORING LESS 1/8 INCH

LAG BOLT REINFORCING STRAP (BOLTED CRATES)

FIGURE 15. Sides' - type C panel (lumber) (heights over 108 inches through 144 inches).

X-3421A

Downloaded from http://www.everyspec.com

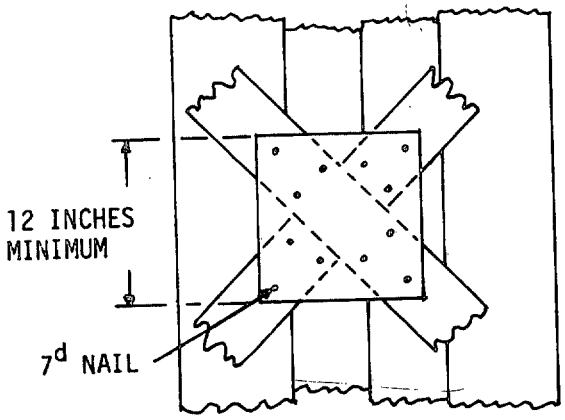

1. USE 1/4 INCH PLYWOOD SHORTEST DIMENSION 12 INCHES MINIMUM.
2. USE 3 NAILS (MIN.) PER MEMBER INTERSECTION - CLINCH ON SHEATHING SIDE.
3. CENTER CORNERS ON CENTER-LINE OF DIAGONALS.
4. FOR CRATES WITH 1 INCH MEMBERS AND HEIGHTS OVER 36 INCHES.

PLYWOOD GUSSET

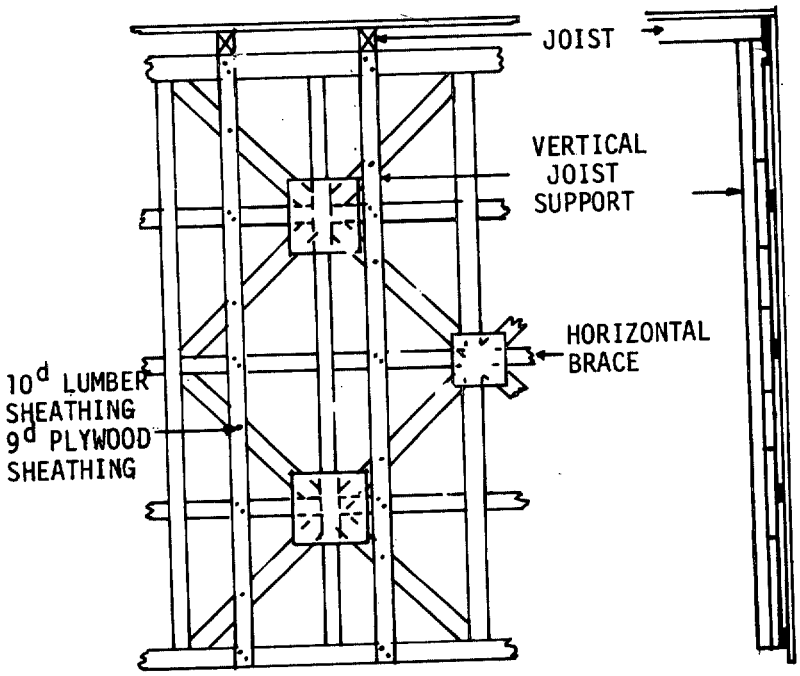

USE FOR 12 FOOT CRATE HEIGHT IN 6 FOOT WIDTH AND FOR 10 FOOT HEIGHT IN 8 FOOT WIDTH WHEN STRUTS ARE SHOWN AS 1 INCH THICK IN MEMBER SELECTION TABLES IV TO IX

VERTICAL JOIST SUPPORTS

FIGURE 16. Joist supports and gussets.

X-3422A

Downloaded from http://www.everyspec.com

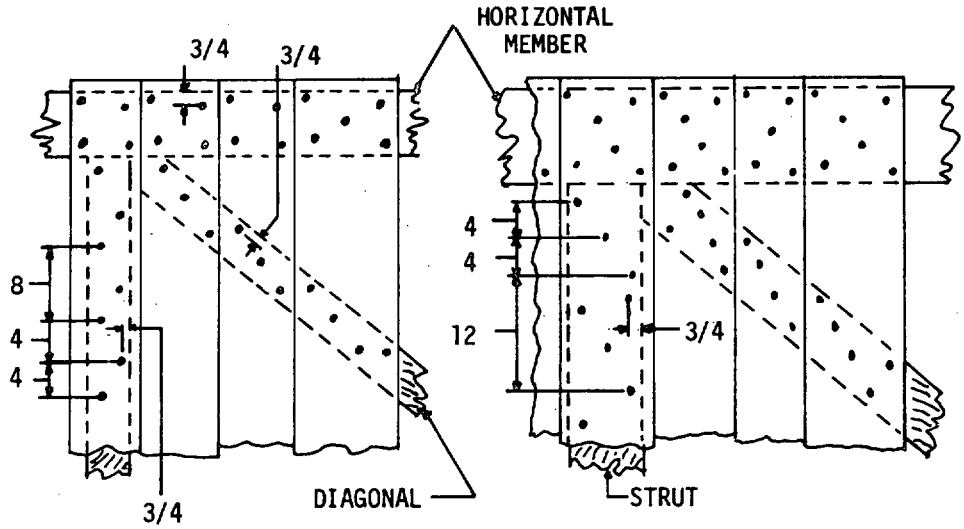

FRAME MEMBER WIDTH

4 INCH AND 6 INCH WIDTHS

8 INCH AND WIDER

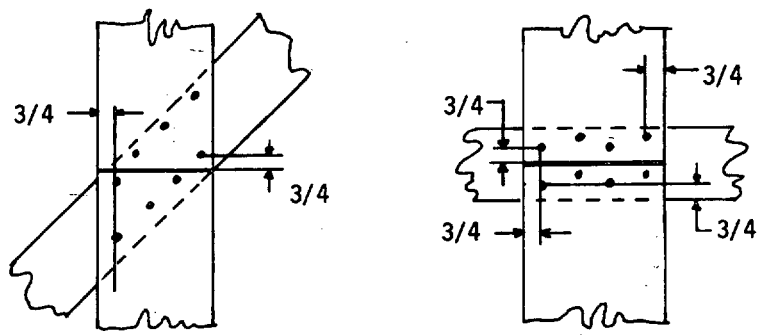

BUTT JOINTS OF SHEATHING

AT DIAGONAL

3 NAILS - 1 x 4 - 1 X 6
4 NAILS - 1 X 8 AND WIDER

AT HORIZONTAL MEMBER

3 NAILS - 1 X 4 - 1 X 6
4 NAILS - 1 X 8 AND WIDER

NOTES: 1. ALL DIMENSIONS ARE IN INCHES.

2. NO ADJACENT BOARDS SHALL BE BUTT JOINED.

FIGURE 17. Fabrication nailing of lumber sheathing.

X-3423

Downloaded from http://www.everyspec.com

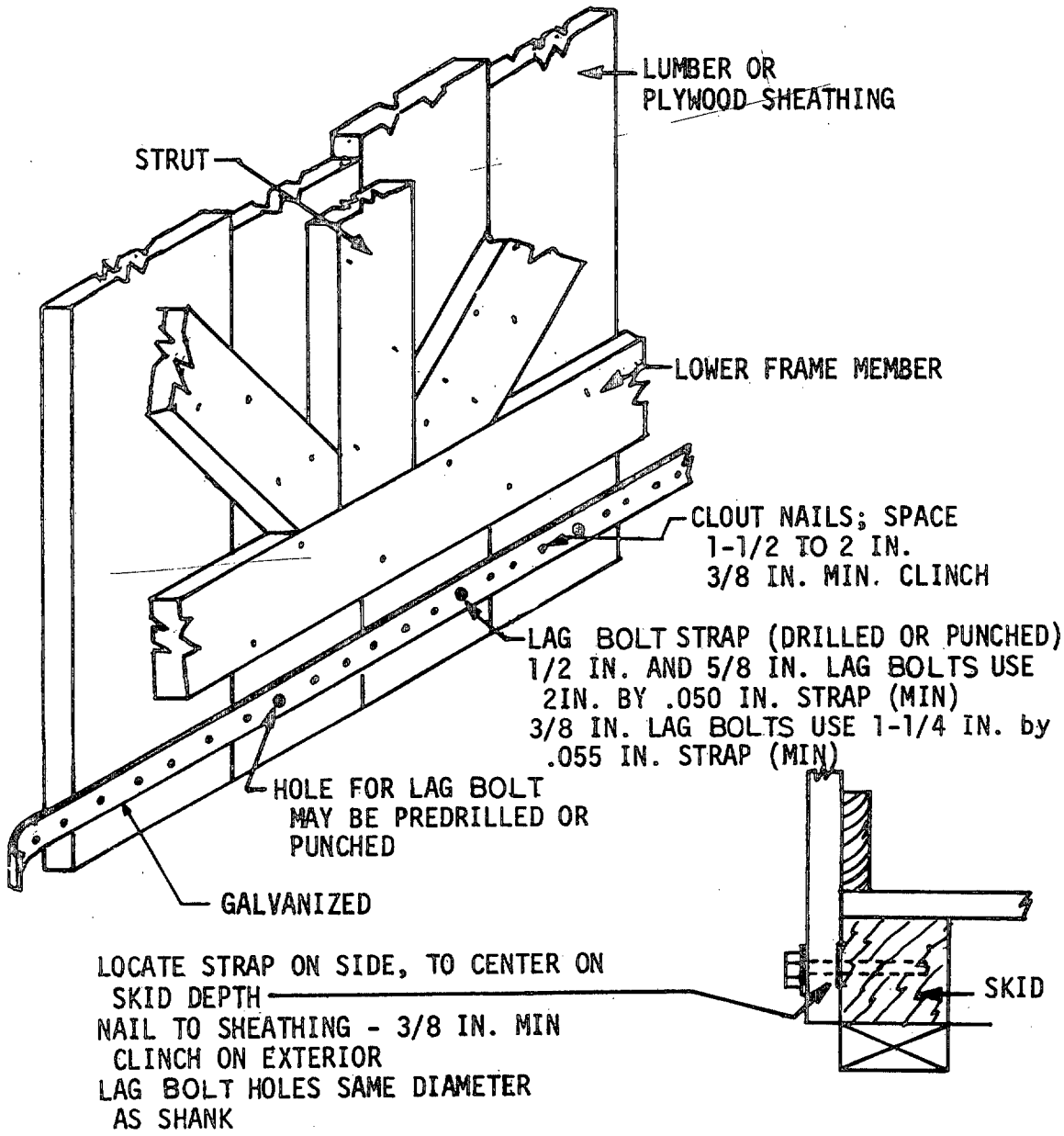

FIGURE 18. Lag bolt reinforcing strap for bolted crates.

X-3424 A

Downloaded from http://www.everyspec.com

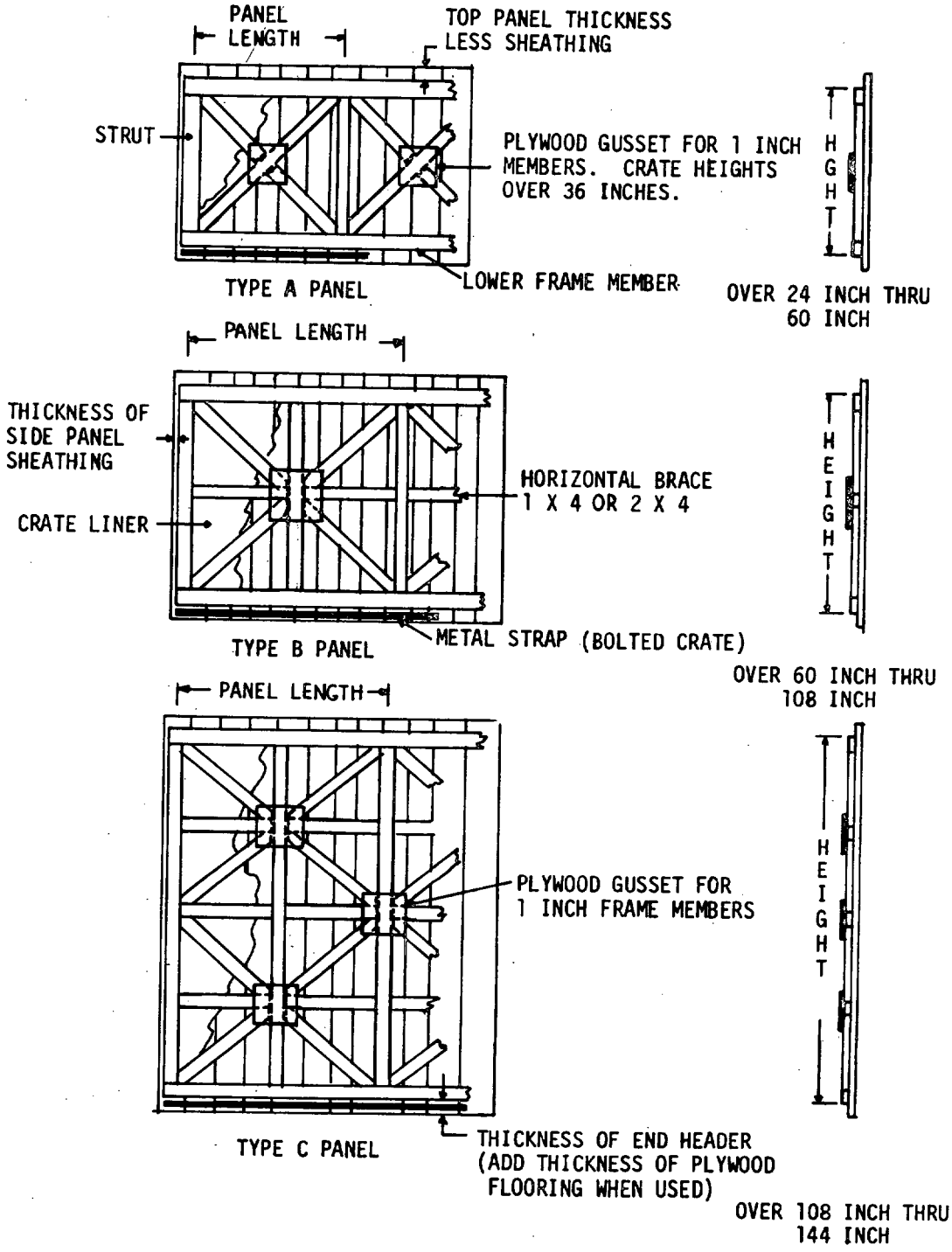

FIGURE 19. End panels over 30 inches wide lumber sheathed crates.

X-3425 A

Downloaded from http://www.everyspec.com

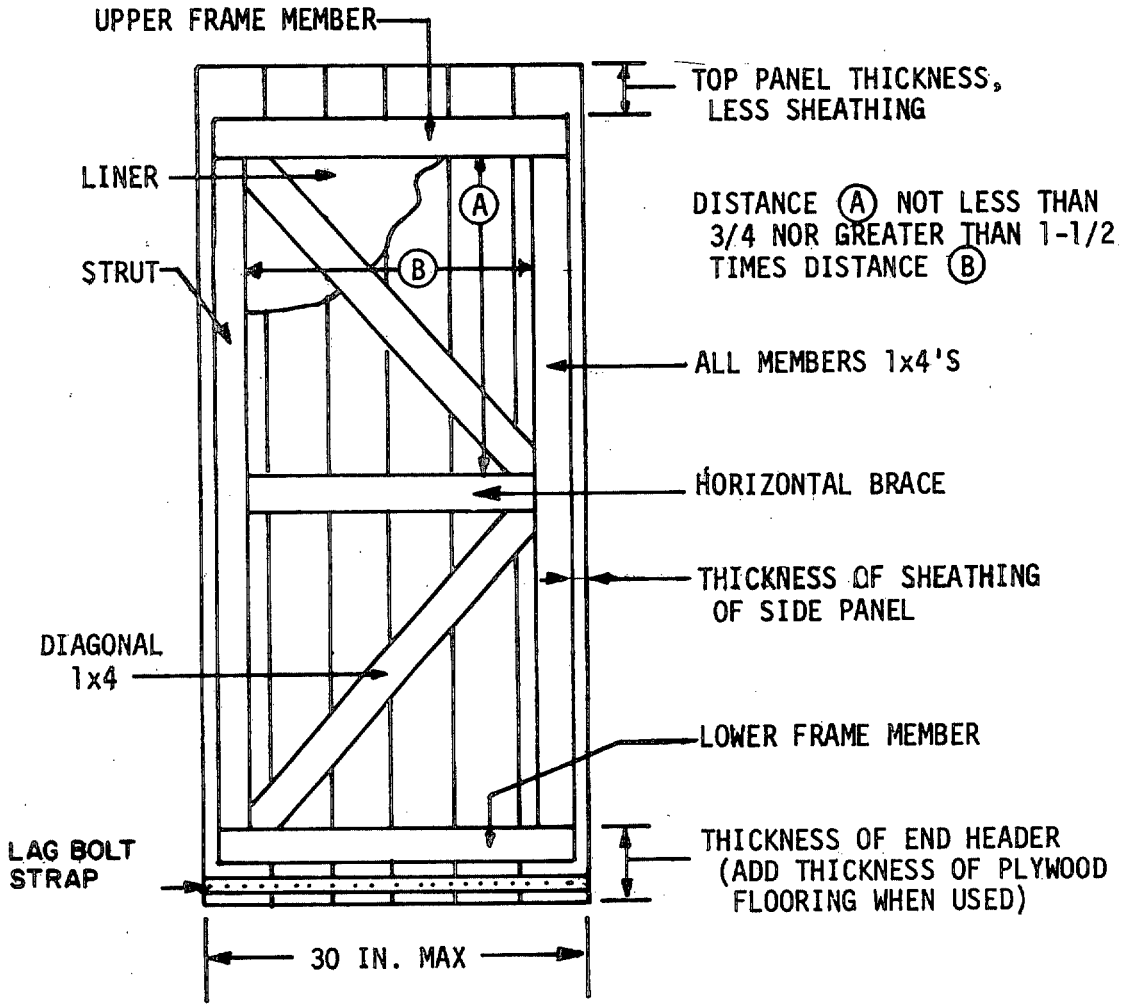

FIGURE 20. Narrow end panels (lumber sheathed crates).

X-3426A

Downloaded from http://www.everyspec.com

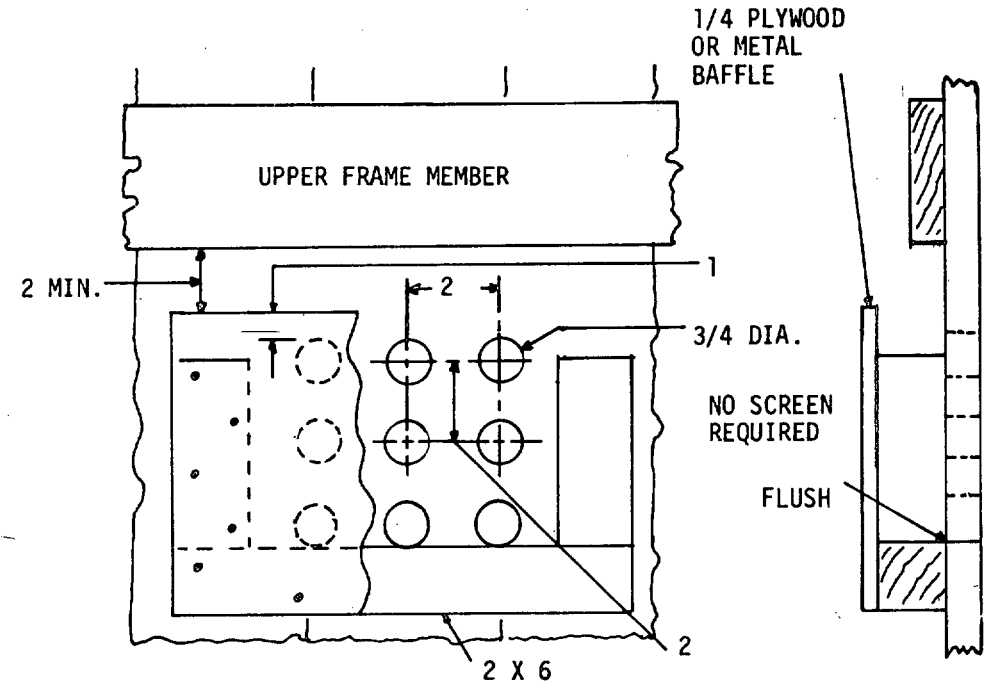

LUMBER SHEATHED CRATE

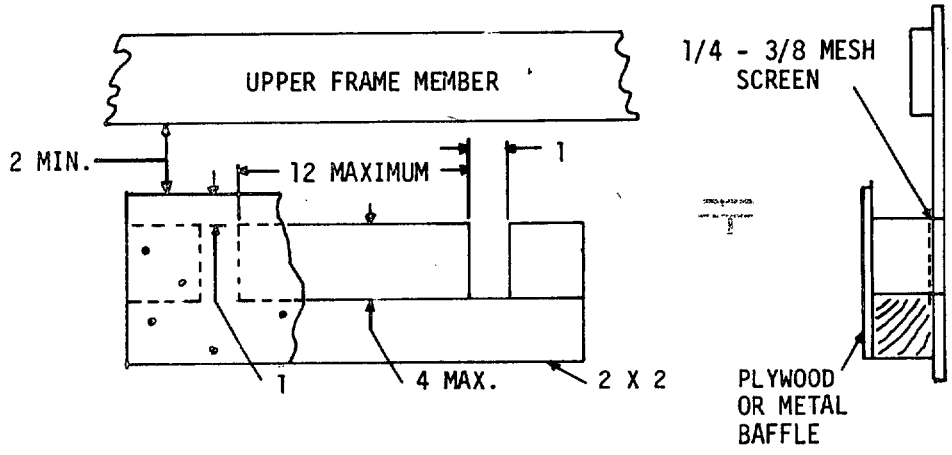

PLYWOOD SHEATHED CRATE

NOTE: ALL DIMENSIONS ARE IN INCHES.

FIGURE 21. Crate ventilation (inside view).

X-3427

Downloaded from http://www.everyspec.com

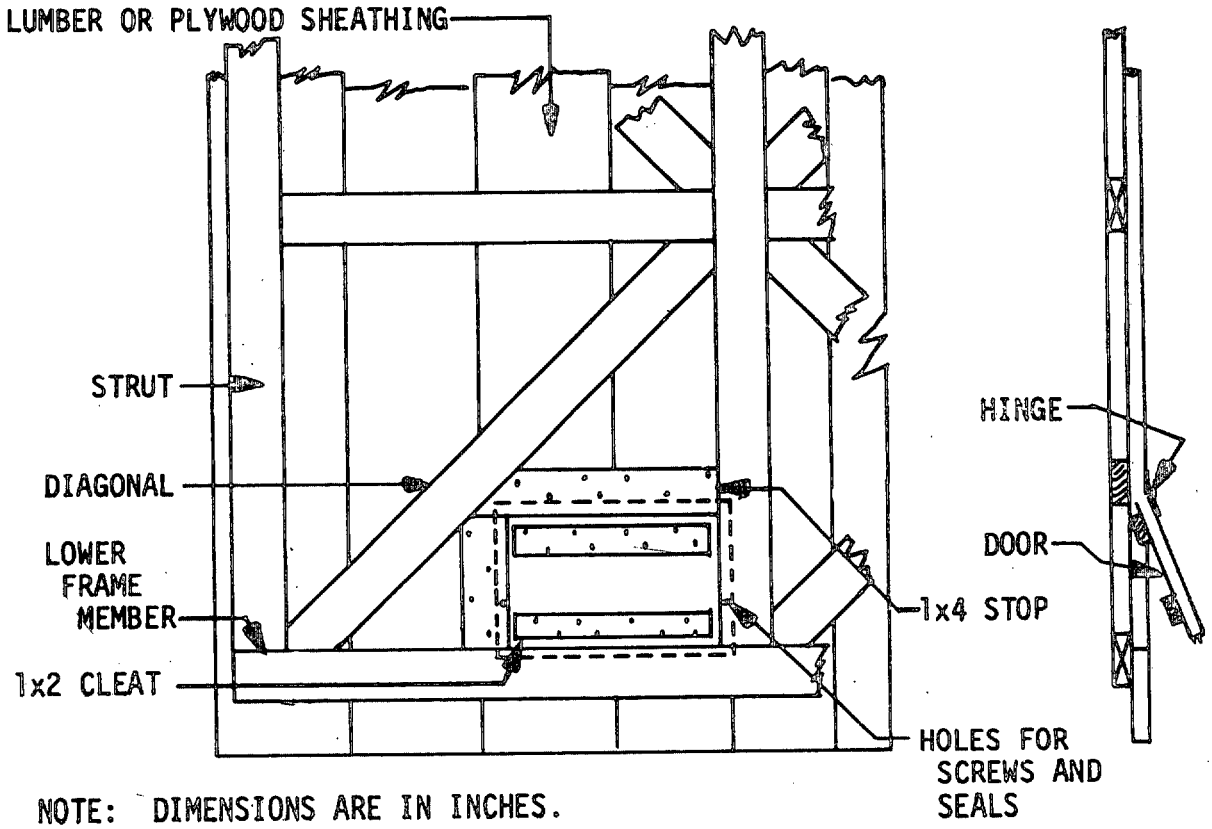

NOTE: DIMENSIONS ARE IN INCHES.

FIGURE 22. Inspection door (inside view).

X-3428

Downloaded from http://www.everyspec.com

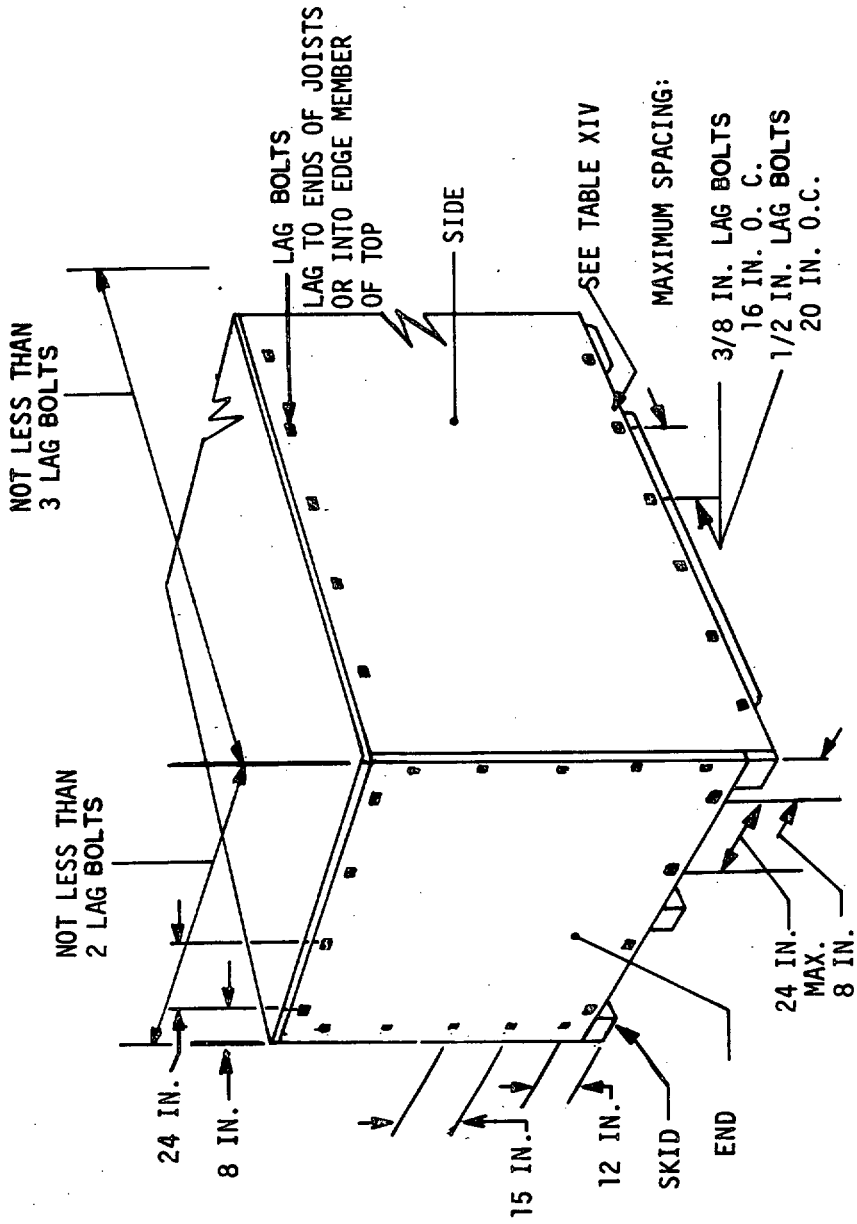

X-3429A

FIGURE 23. Assembly of bolted crate (lumber or plywood sheathed).

Downloaded from http://www.everyspec.com

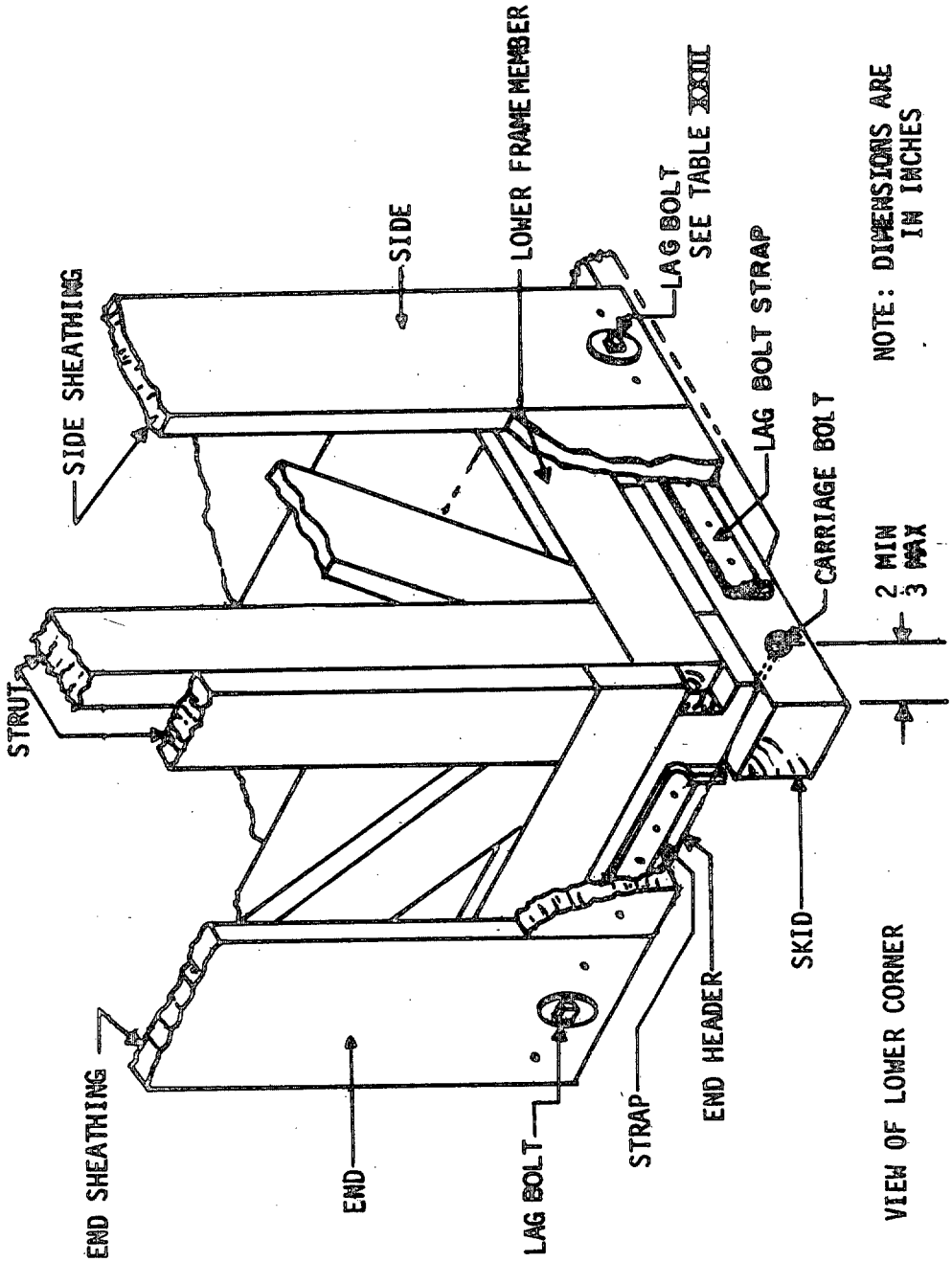

X-3430A

FIGURE 24. Assembly of bolted crate.

Downloaded from http://www.everyspec.com

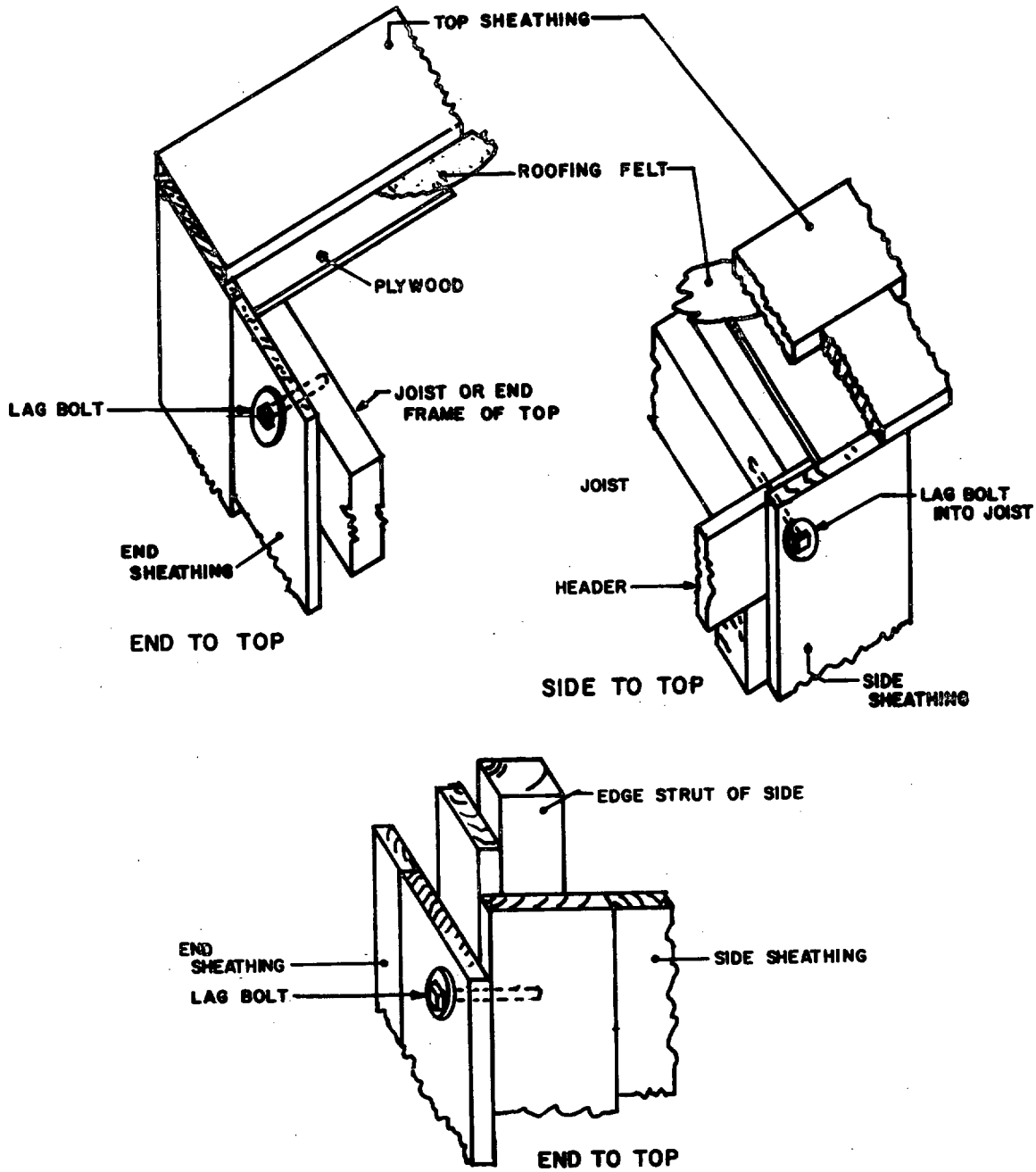

FIGURE 25. Assembly of bolted crate.

X-3431A

Downloaded from http://www.everyspec.com

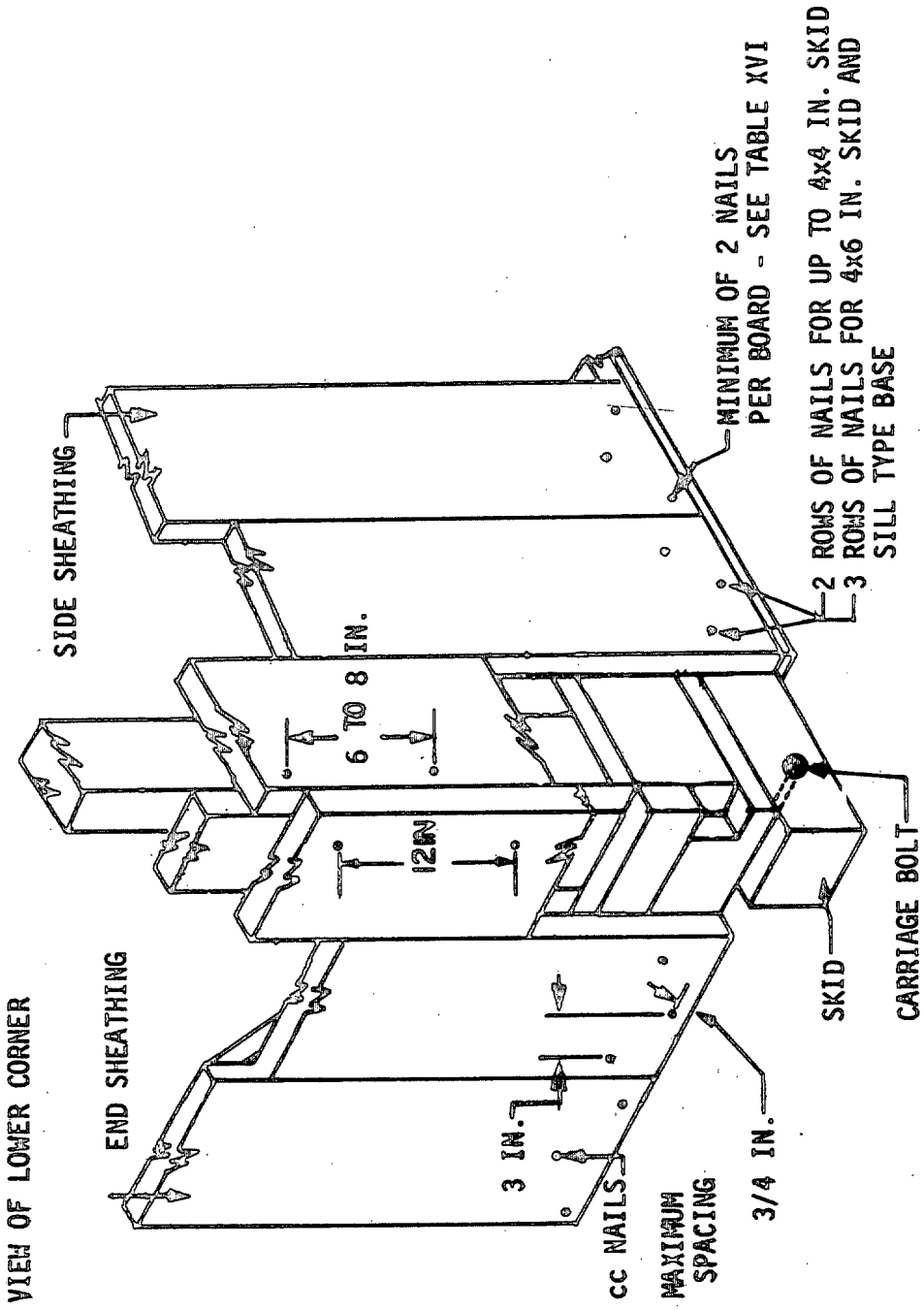

X-3432 A

FIGURE 26. Assembly of nailed crate, lumber or plywood sheathed.

Downloaded from http://www.everyspec.com

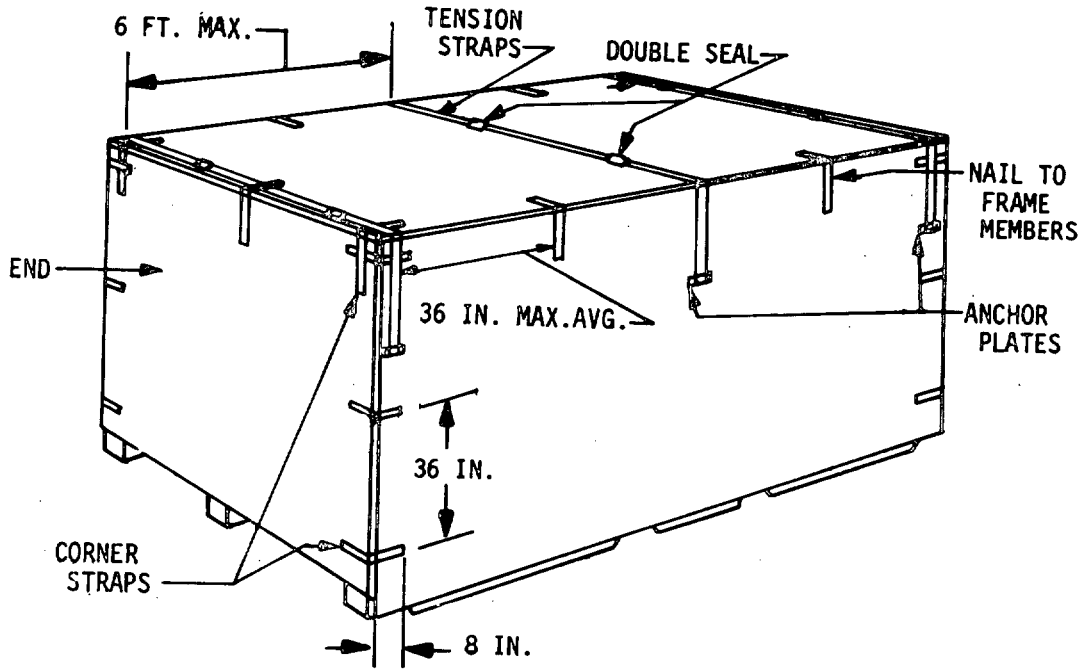

NOTE: 1. STRAPPING REQUIRED FOR ALL NAILED CRATES
2. FOR BOLTED CRATES WITH NET LOADS OVER 3000 POUNDS, USE CORNER STRAPS ONLY

FIGURE 27. Corner and top strapping (lumber or plywood sheathing).

X-3433

Downloaded from http://www.everyspec.com

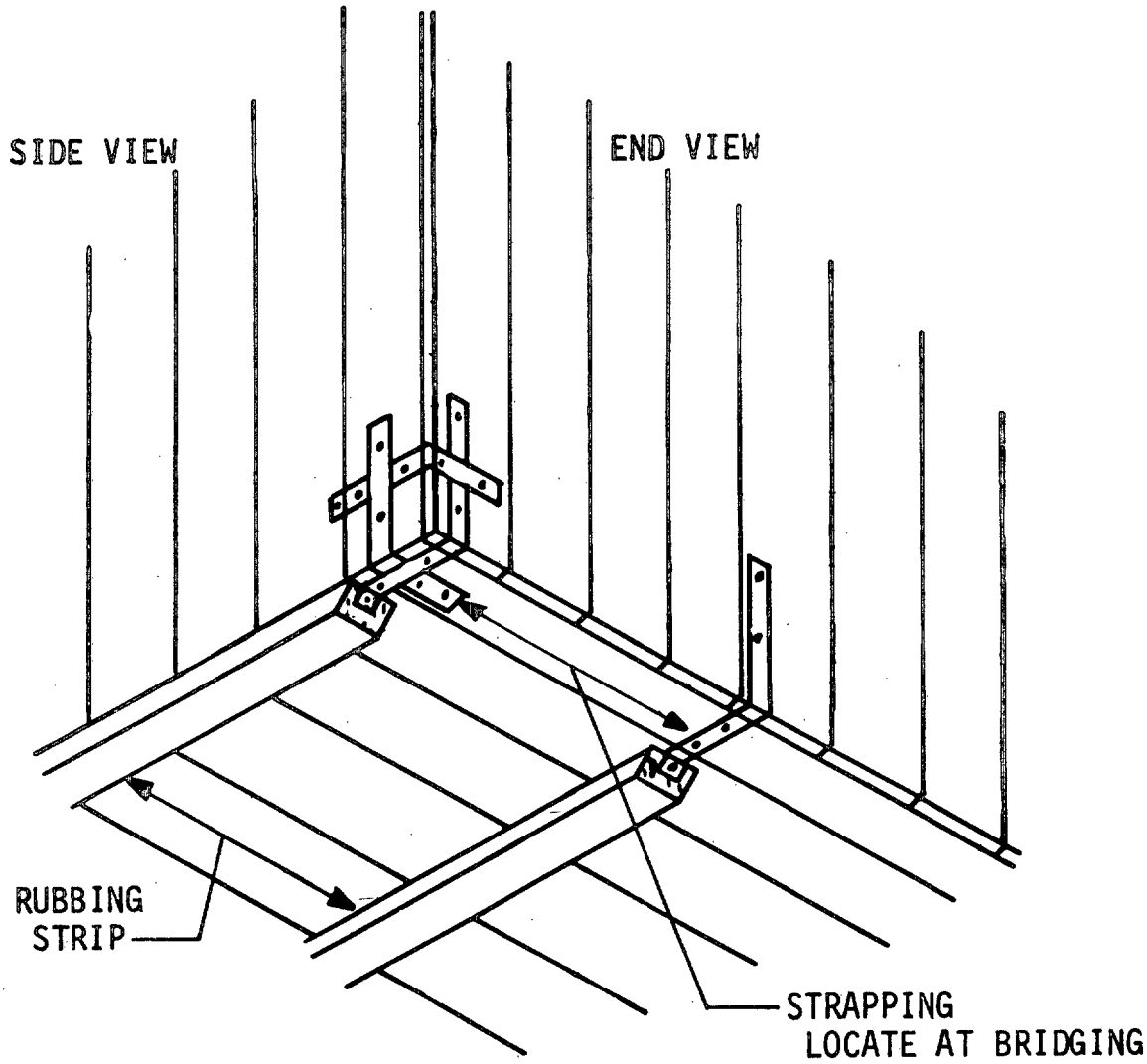

FIGURE 28. Sill base strapping.

X-3434

Downloaded from http://www.everyspec.com

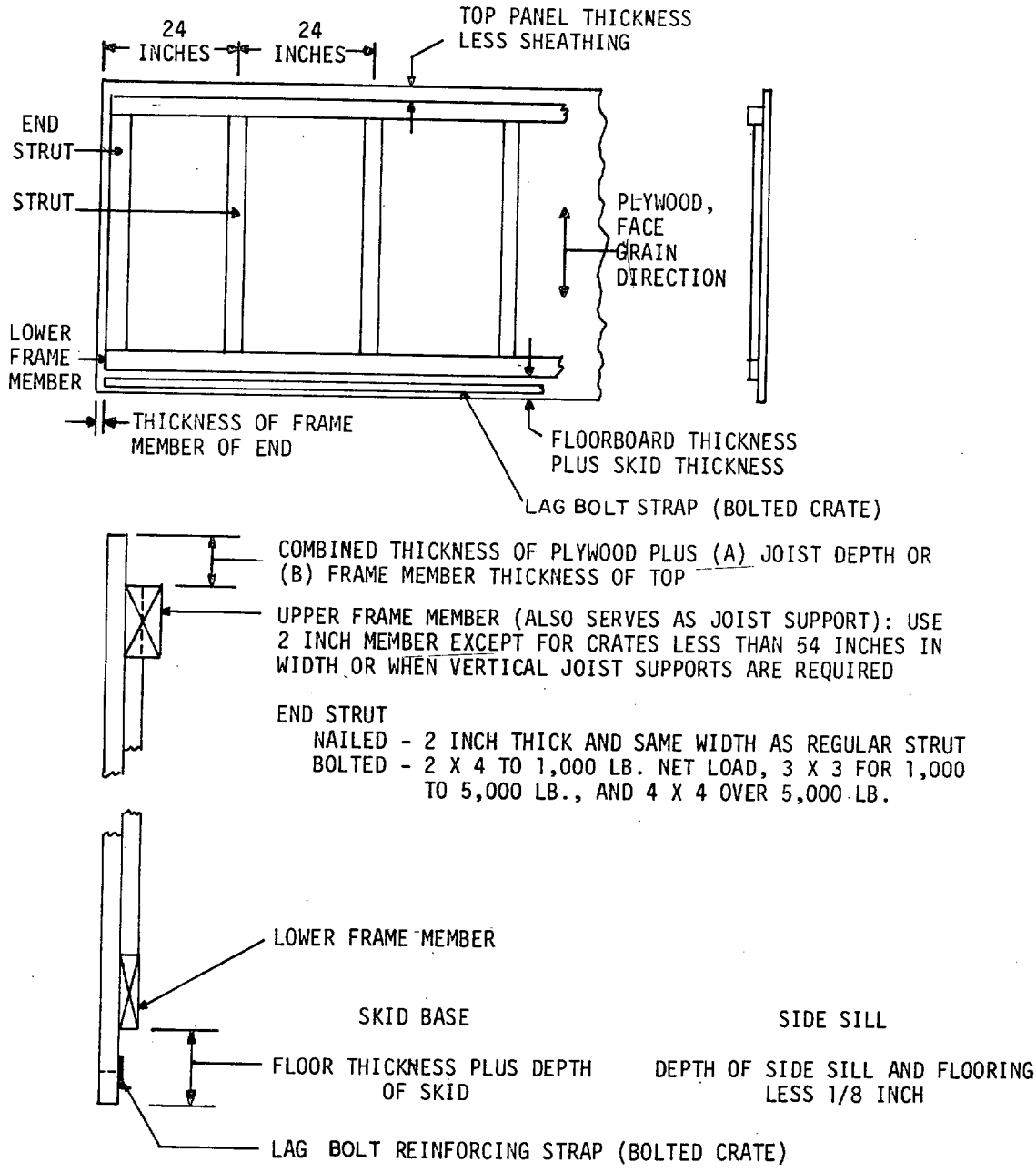

FIGURE 29. Sides — type A panel (plywood) (heights over 24 inches through 60 inches).

X-3435A

Downloaded from http://www.everyspec.com

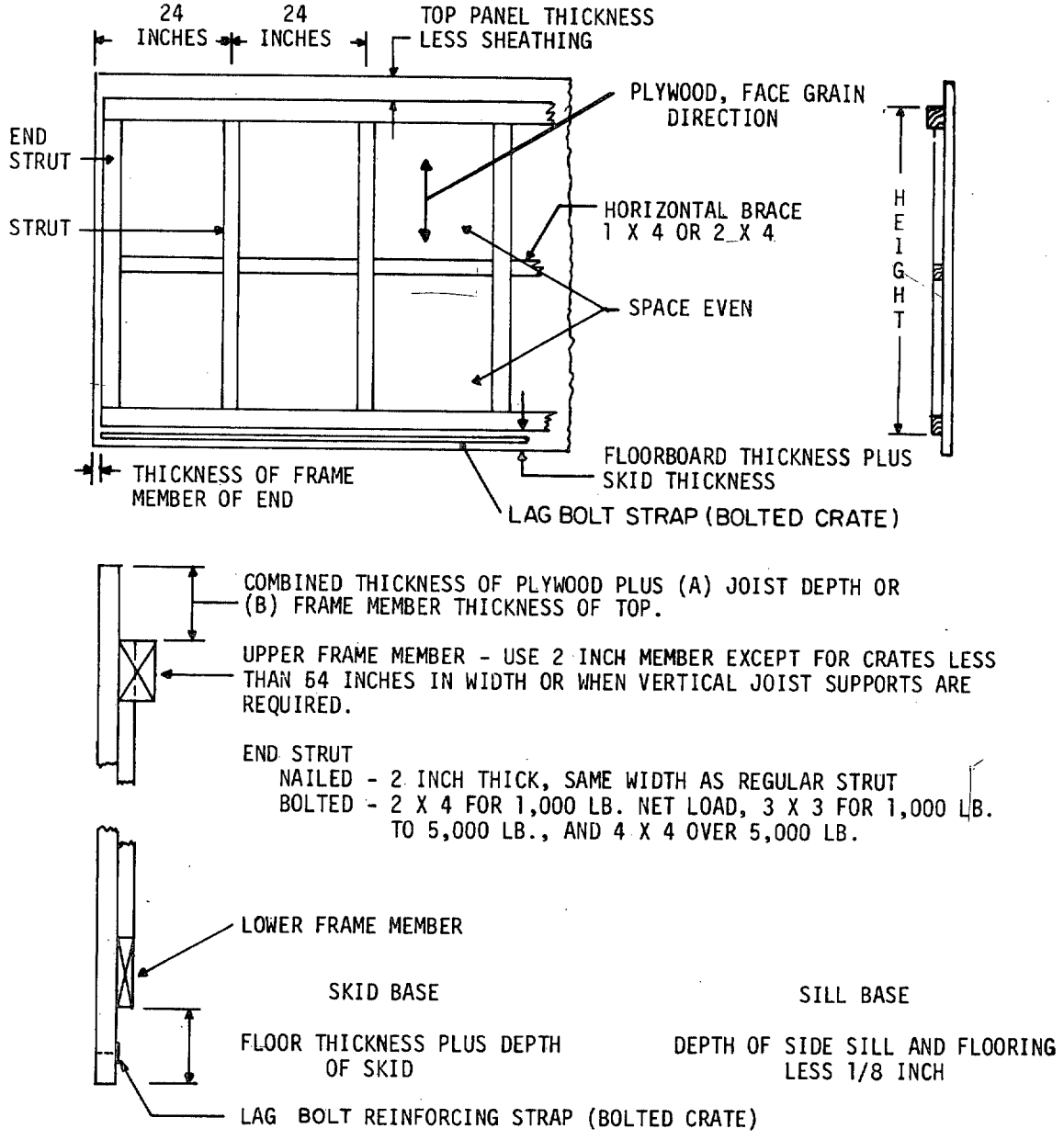

FIGURE 30. Sides - type B panel (plywood) (heights over 60 inches through 96 inches).

X-3436 A

Downloaded from http://www.everyspec.com

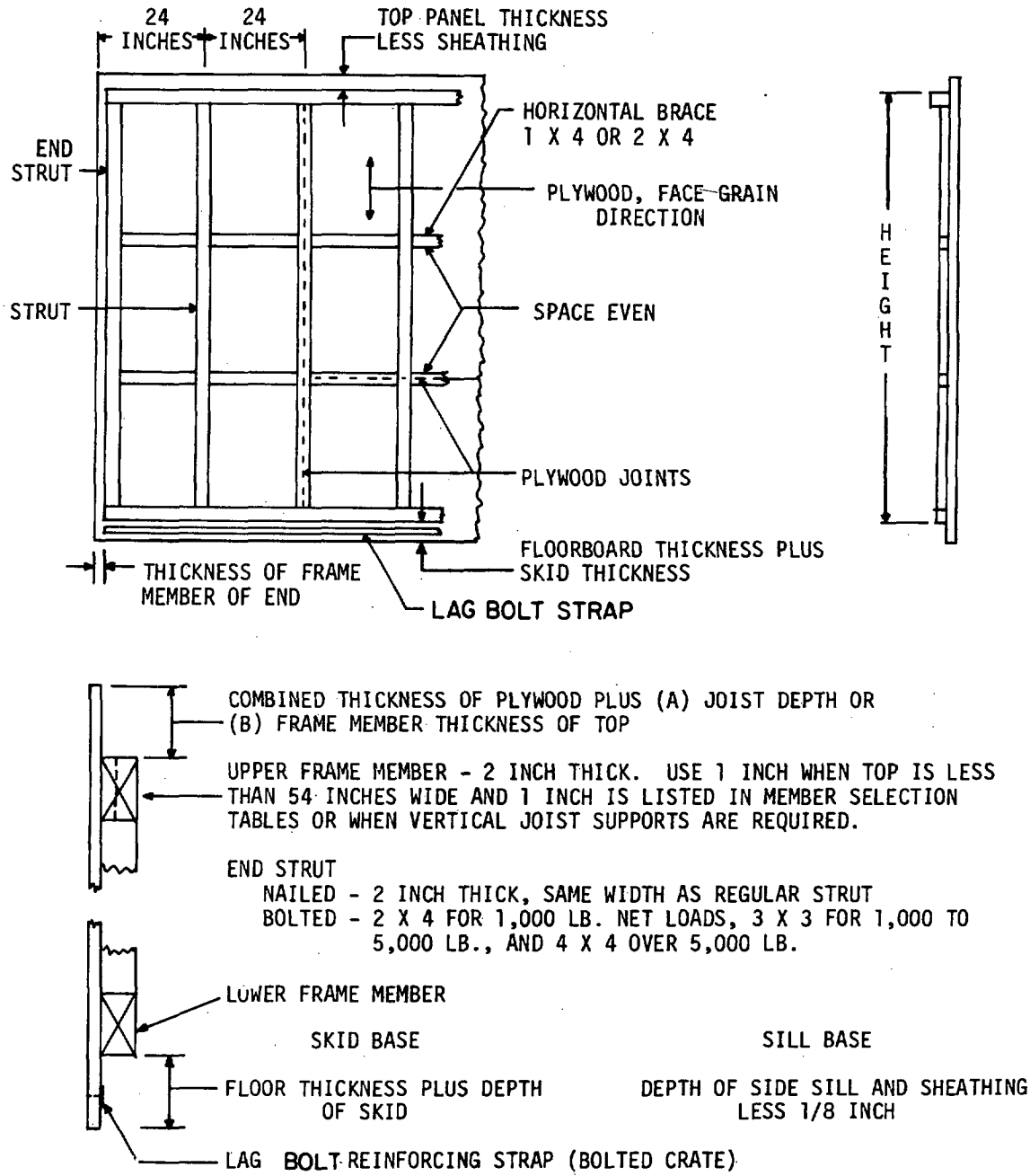

FIGURE 31. Sides - type C panel (plywood) (heights over 96 inches through 144 inches).

X-3437A

Downloaded from http://www.everyspec.com

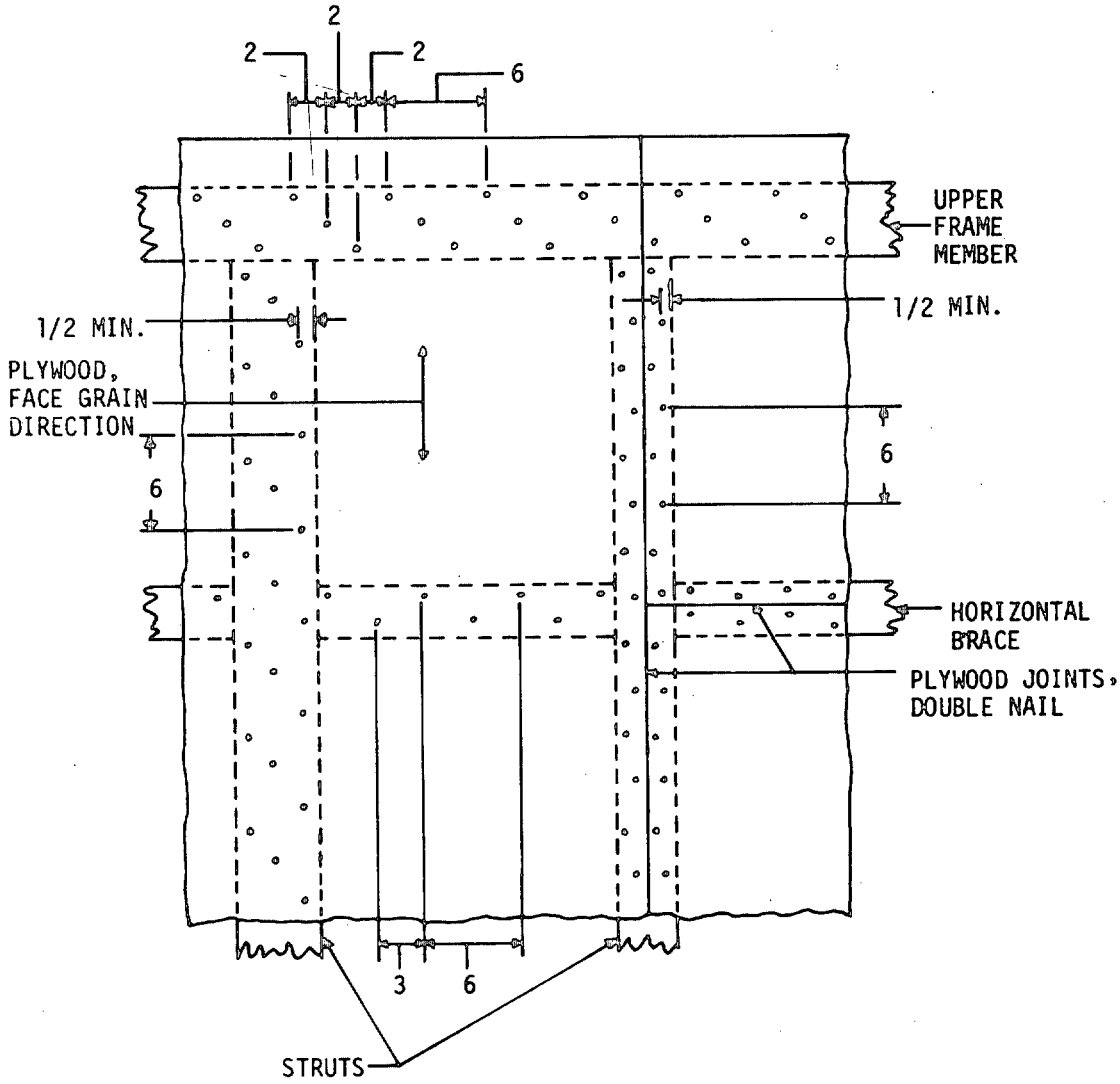

NOTES:
1. ALL DIMENSIONS ARE IN INCHES.
2. 3 ROWS OF NAILS FOR ALL MEMBERS OVER 4 INCHES WIDE.
3. 2 ROWS OF NAILS FOR ALL MEMBERS UP TO 4 INCHES WIDE.

FIGURE 32. Fabrication nailing plywood sheathing.

X-3438

Downloaded from http://www.everyspec.com

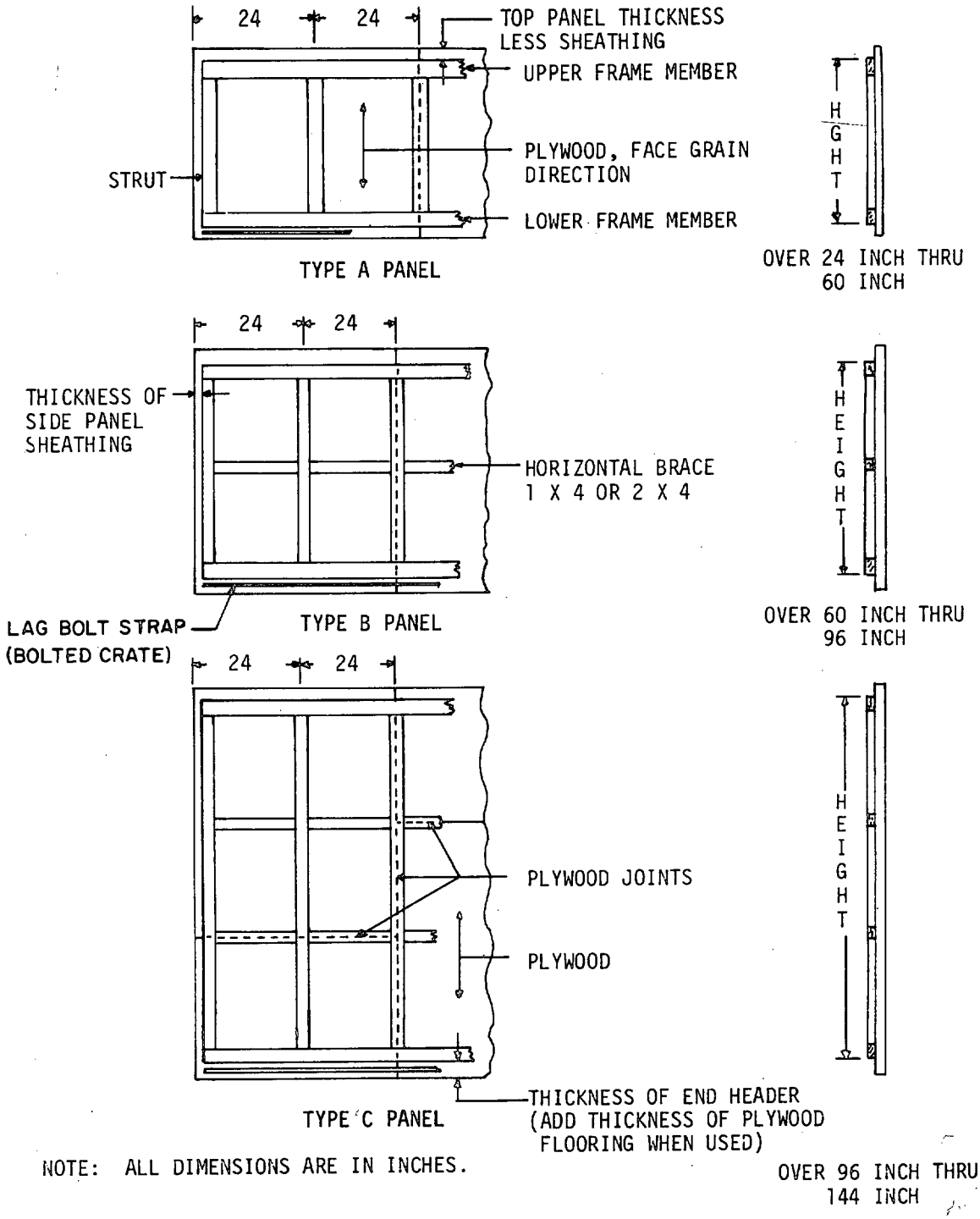

NOTE: ALL DIMENSIONS ARE IN INCHES.

FIGURE 33. End panels plywood sheathed crates.

X-3439A

Downloaded from http://www.everyspec.com

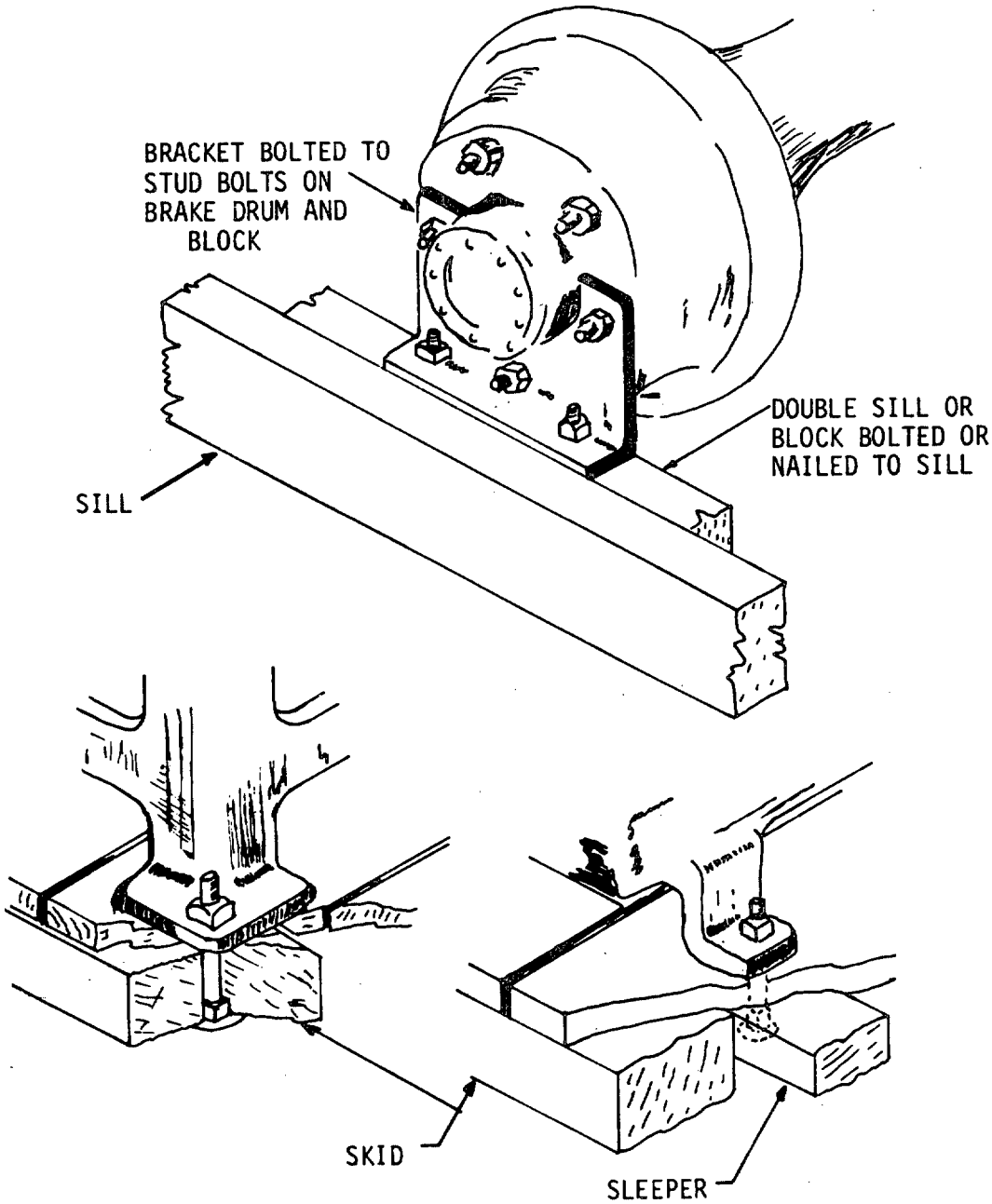

FIGURE 34. Methods of bolting down.

X-3440

Downloaded from http://www.everyspec.com

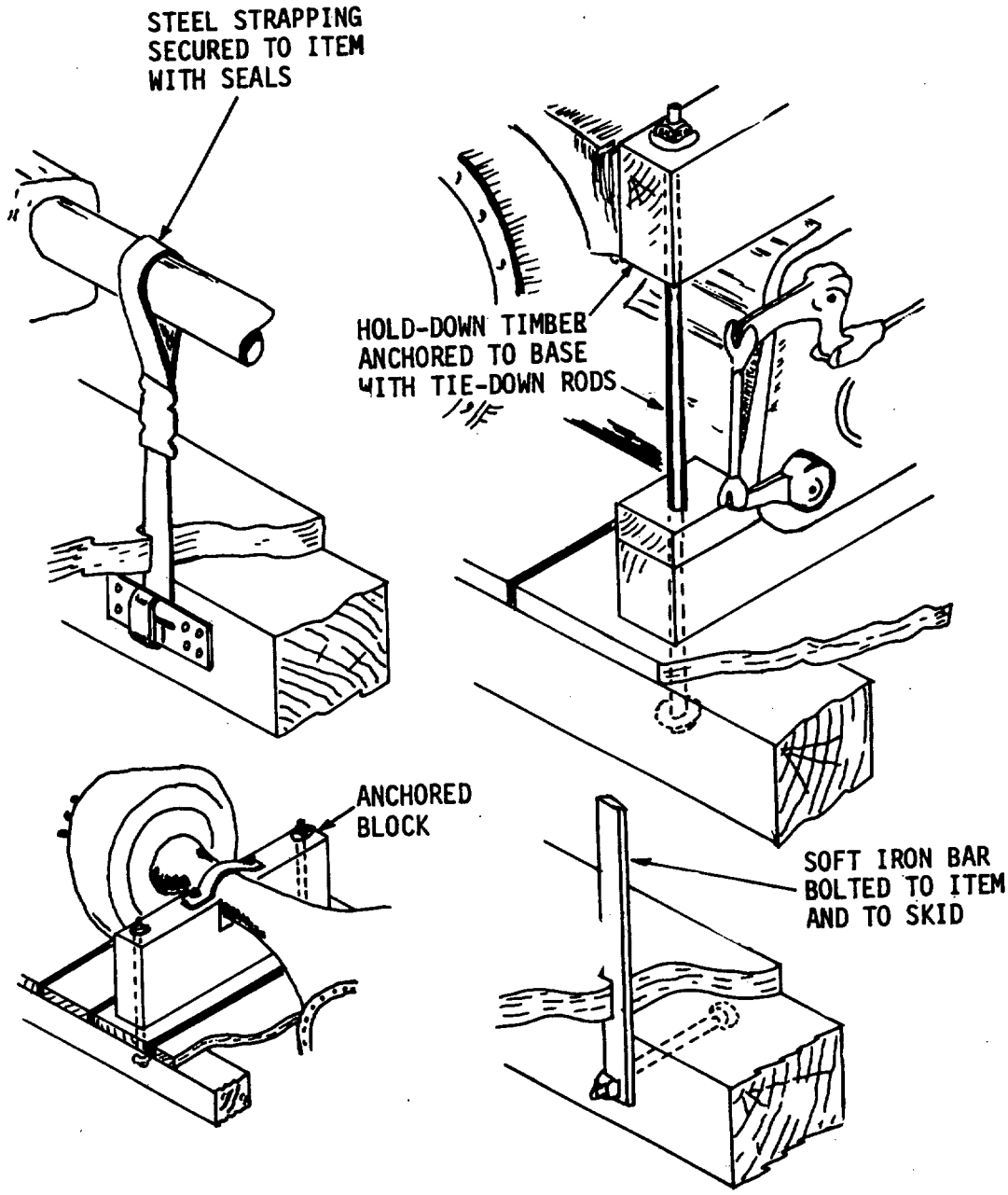

FIGURE 35. Hold-downs and tie-downs for skid bases.

X-3441

Downloaded from http://www.everyspec.com

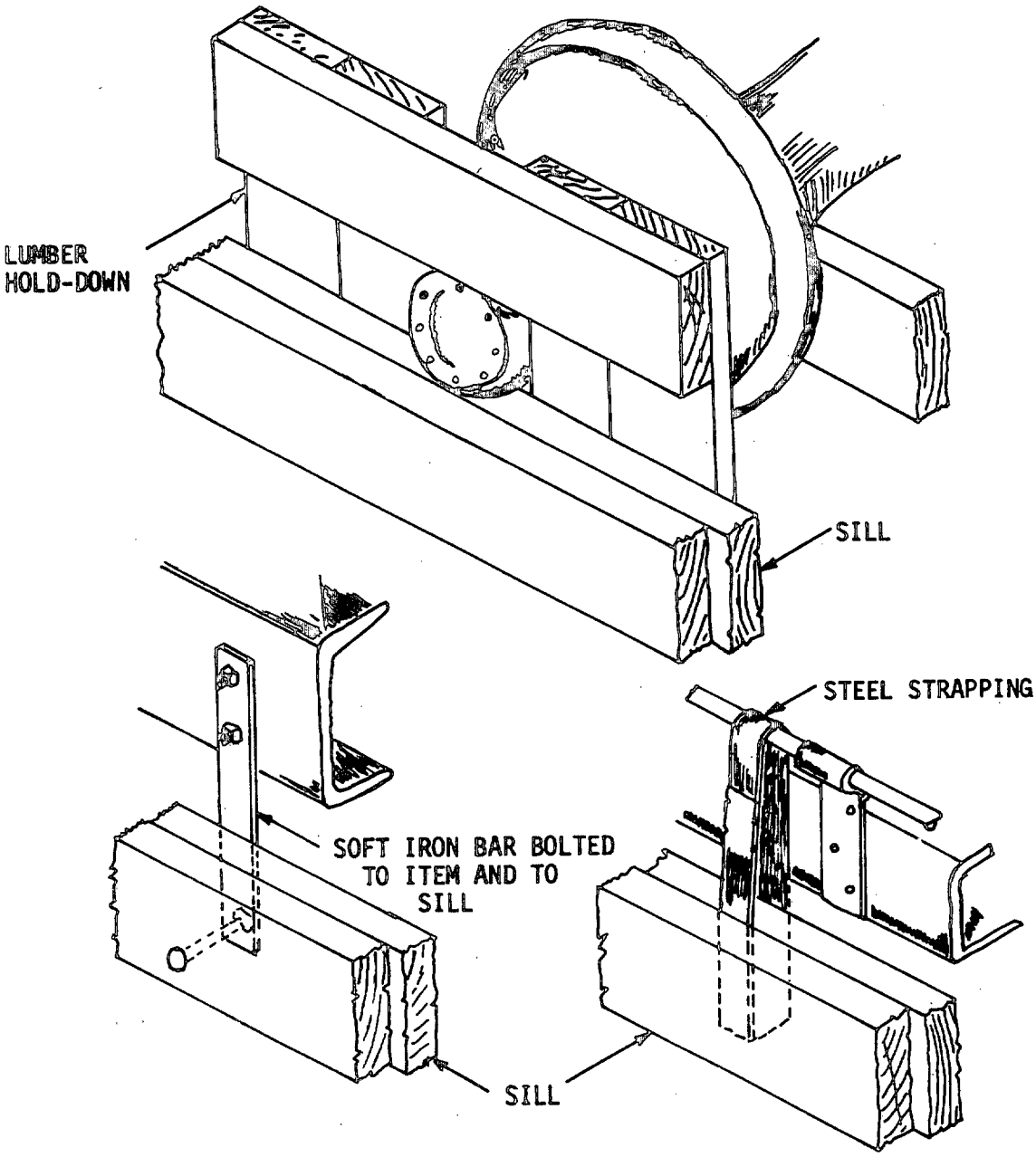

FIGURE 36. Hold-downs and tie-downs for sill bases.

X-3442

Downloaded from http://www.everyspec.com

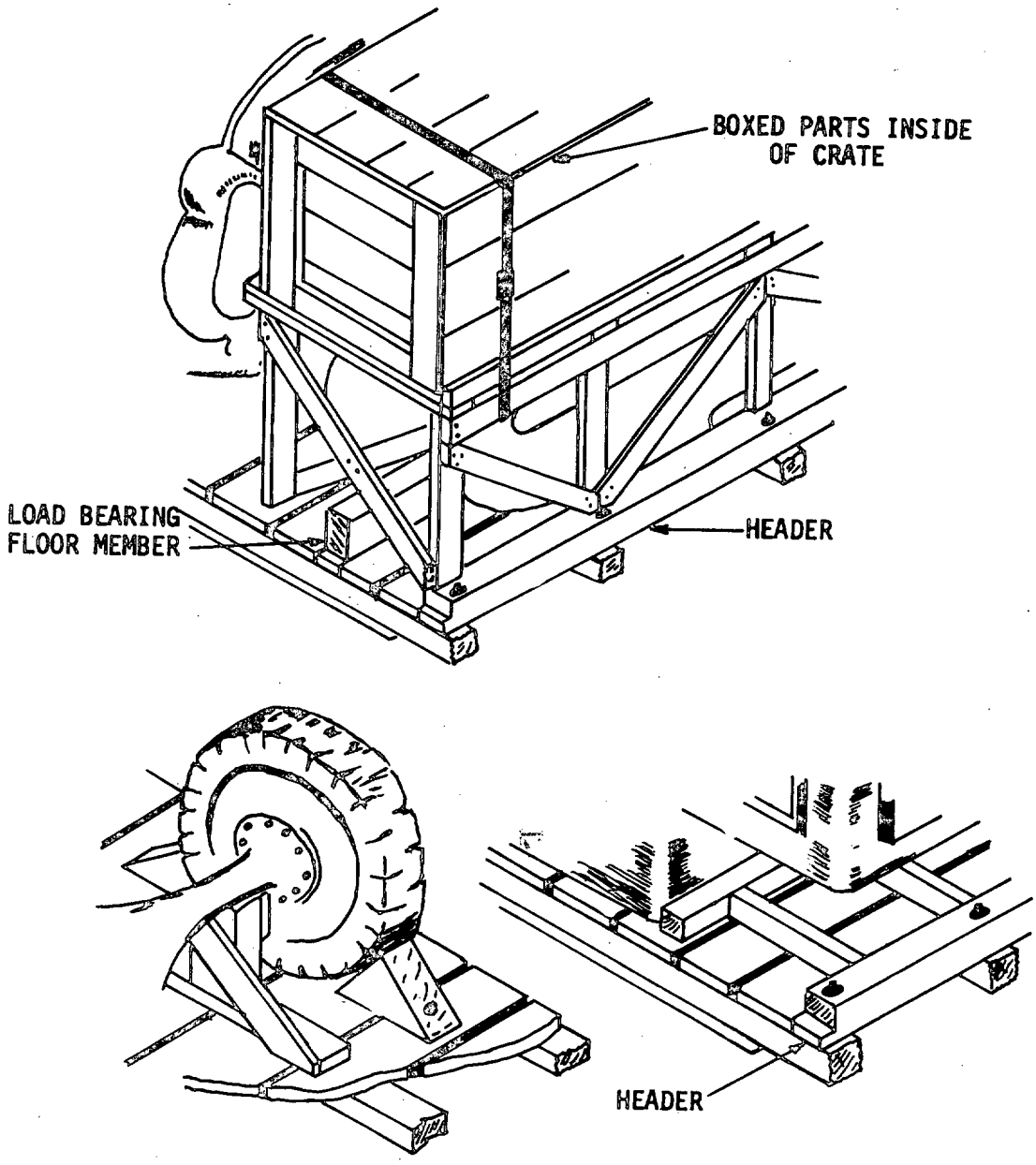

FIGURE 37. Blocking and bracing.

X-3443

Downloaded from http://www.everyspec.com

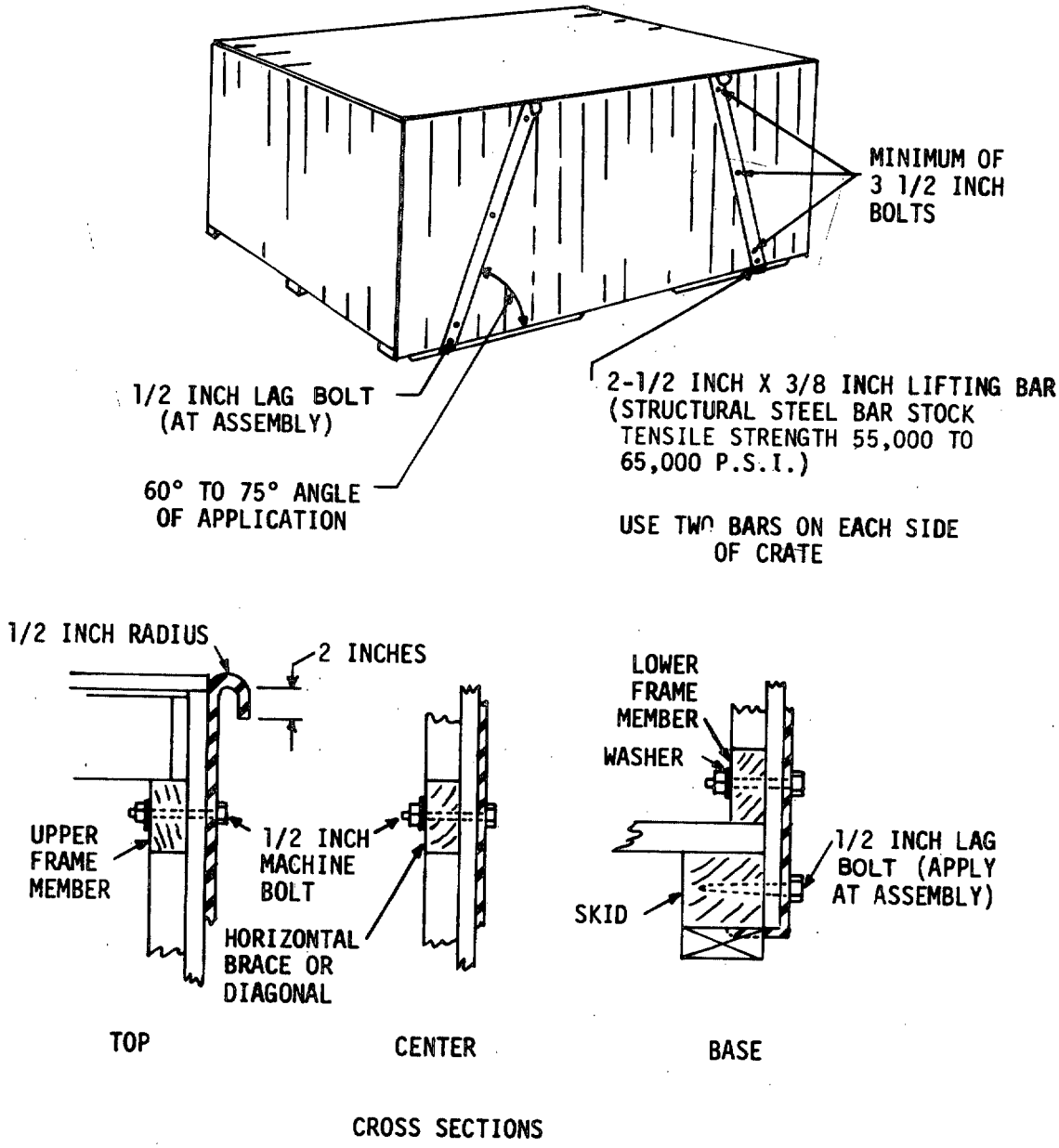

FIGURE 38. Bars for lifting crates.

X-3444A

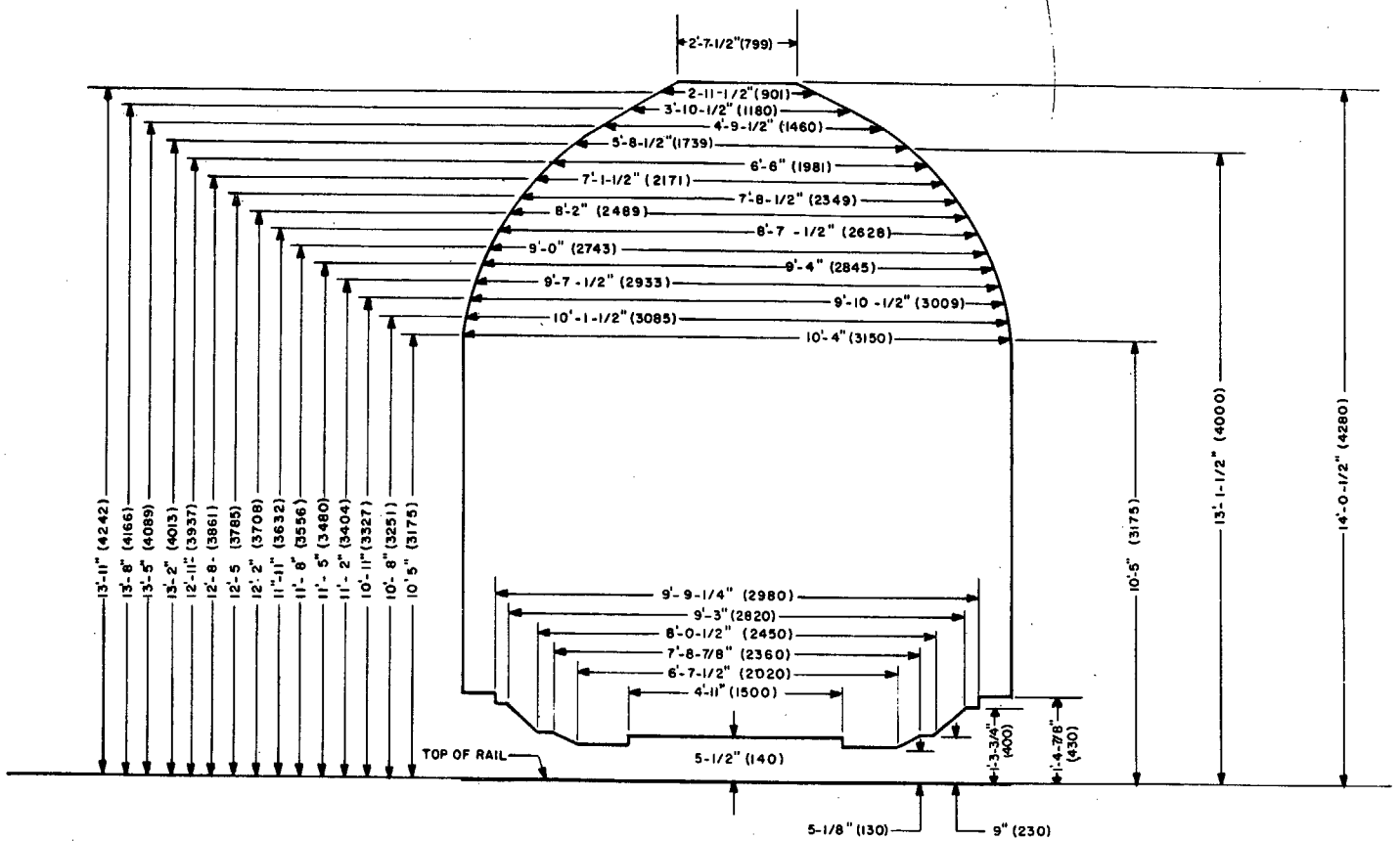

NOTES:

1. HEIGHT OF WAGON FLOOR USED TO BE DEDUCTED FROM HEIGHTS SHOWN ON THIS DRAWING.
2. FIGURES IN PARENTHESES INDICATE DIMENSIONS IN MILLIMETERS.

FIGURE 39. International loading gauge.

X-3605

Downloaded from http://www.everyspec.com

Downloaded from http://www.everyspec.com

APPENDIX

DISASSEMBLY OF ITEM, ANCHORING, BLOCKING, AND LIFTING ATTACHMENTS

10. SCOPE. This appendix covers disassembly of items, anchoring and blocking, and lifting attachments.

20. APPLICABLE DOCUMENTS. None.

30. REQUIREMENTS.

30.1 Item disassembly. Design of the crate should be based on a careful study of the item(s) to be packed. Such a study should consider the shape, size, weight, strength and degree of fragility of the item(s), the availability of mounting provisions and the disassembly permissible for shipment. All reasonable disassembly should be performed to effect a saving in crate volume. Unless otherwise specified by the procuring agency, the disassembly shall not be of such extent as to require special personnel or equipment or an unjustifiable amount of time for reassembly.

30.2 Anchoring and blocking.

30.2.1 General. Attention shall be given to anchoring of the contents within the crate in order that proper design and construction of the container will not be nullified during shipment and rough handling. Care shall be taken, by padding and cushioning where necessary, to prevent damage to the contents of the crate at points where blocks, braces, or straps come in contact with a part of the crated item.

30.2.2 Bolting down. When there are holes in the item being crated which can be utilized for anchoring it to the crate base, the item shall be bolted through the skids or chamfered longitudinal sleepers, minimum size 2 inches by 4 inches by not less than 3 feet long, shall be added underneath the floor of skid-type bases so that the tie-down stress will be distributed. When bolting to sill bases, bolts shall not pass through the depth of the sill but through blocks which shall be securely nailed or bolted to the sill (see figure 34).

30.2.3 Hold-downs and tie-downs. When bolt holes in the item being crated are not available, the item shall be anchored to the base by means of either lumber hold-downs, tie-downs rods used in combination with hold-downs timbers, or tensioned metal strapping or soft iron straps securely attached to the skids, sills or other frame members (see figures 35 and 36). Consideration shall also be given to strapping parts of the item being crated to the item itself.

Downloaded from http://www.everyspec.com

30.2.4 Blocking and bracing. In conjunction with, or in lieu of metal strapping, wood blocks and braces shall be used to prevent movement of load within the crate. Sidesway of topheavy items shall be prevented either by strapping, blocking, or bracing (see figure 37). Wood blocks and braces shall be securely nailed to floorboards, sills, headers, or other frame members and not directly to sheathing. End grain nailing shall not be used to hold blocking in place.

30.3 Lifting attachments. Large, heavy crates are often severely damaged by ordinary handling with slings or grabhooks. Much of the damage can be eliminated by providing special handling attachments on crates. Suggested details of such crates are shown in figure 38. Such attachments are capable of carrying 12,000 pounds each with a factor of safety of about four. Smaller bars may be used for lighter crates but the safety factor of four should be maintained.

☆U.S. GOVERNMENT PRINTING OFFICE: 1980—603-121/944

Downloaded from http://www.everyspec.com

STANDARDIZATION DOCUMENT IMPROVEMENT PROPOSAL

(See Instructions – Reverse Side)

1. DOCUMENT NUMBER	2. DOCUMENT TITLE

3a. NAME OF SUBMITTING ORGANIZATION	4. TYPE OF ORGANIZATION *(Mark one)*
	☐ VENDOR
b. ADDRESS *(Street, City, State, ZIP Code)*	☐ USER
	☐ MANUFACTURER
	☐ OTHER *(Specify)*: _____

5. PROBLEM AREAS

a. Paragraph Number and Wording:

b. Recommended Wording:

c. Reason/Rationale for Recommendation:

6. REMARKS

7a. NAME OF SUBMITTER *(Last, First, MI)* – Optional	b. WORK TELEPHONE NUMBER *(Include Area Code)* – Optional
c. MAILING ADDRESS *(Street, City, State, ZIP Code)* – Optional	8. DATE OF SUBMISSION *(YYMMDD)*

DD FORM 82 MAR 1426 PREVIOUS EDITION IS OBSOLETE.

Downloaded from http://www.everyspec.com

INSTRUCTIONS: In a continuing effort to make our standardization documents better, the DoD provides this form for use in submitting comments and suggestions for improvements. All users of military standardization documents are invited to provide suggestions. This form may be detached, folded along the lines indicated, taped along the loose edge *(DO NOT STAPLE)*, and mailed. In block 5, be as specific as possible about particular problem areas such as wording which required interpretation, was too rigid, restrictive, loose, ambiguous, or was incompatible, and give proposed wording changes which would alleviate the problems. Enter in block 6 any remarks not related to a specific paragraph of the document. If block 7 is filled out, an acknowledgement will be mailed to you within 30 days to let you know that your comments were received and are being considered.

NOTE: This form may not be used to request copies of documents, nor to request waivers, deviations, or clarification of specification requirements on current contracts. Comments submitted on this form do not constitute or imply authorization to waive any portion of the referenced document*(s)* or to amend contractual requirements.

(Fold along this line)

(Fold along this line)

DEPARTMENT OF THE ARMY

NO POSTAGE NECESSARY IF MAILED IN THE UNITED STATES

OFFICIAL BUSINESS
PENALTY FOR PRIVATE USE $300

BUSINESS REPLY MAIL
FIRST CLASS PERMIT NO. 12062 WASHINGTON D. C.
POSTAGE WILL BE PAID BY THE DEPARTMENT OF THE ARMY

Commander
USA Mobility Equipment R&D Command
ATTN: DRDME-DS
Ft. Belvoir, VA 22060