MIL-B-8954B
17 September 1970
SUPERSEDING
MIL-B-8954A(ASG)
11 September 1968

MILITARY SPECIFICATION

BASE AND ACCESSORIES, AIRPORT MARKER LIGHTS, GENERAL SPECIFICATION FOR

This specification has been approved by the Department of the Air Force and by the Naval Air Systems Command.

1. SCOPE

1.1 This specification covers the general requirements for bases, base plate assemblies, adapter plates, covers, frangible couplings, cable clamps, and gaskets used to install airport semiflush and elevated lights.

2. APPLICABLE DOCUMENTS

* 2.1 The following documents, of the issue in effect on date of invitation for bids or request for proposal, form a part of this specification to the extent specified herein:

SPECIFICATIONS

Federal

NN-P-530	Plywood, Flat Panel

Military

MIL-E-17555	Electronic and Electrical Equipment and Associated Repair Parts, Preparation for Delivery of

STANDARDS

Military

MIL-STD-100	Engineering Drawing Practices
MIL-STD-831	Test Reports, Preparation of

FSC 6210

MIL-STD-889	Dissimilar Metals
MS17814	Coupling, Frangible, Aviation Ground Lights
MS17815	Clamp, Cable, Aviation Ground Lights
MS21205	Washer, Seal, Compression
MS24345	Base Plate Assembly, Runway Marker Light
MS24526	Base, Airport Marker Light
MS26577	Gasket, Airport Marker Light Base
MS26580	Cover, Airport Marker Light Base, Blank
MS35763	Bolt, Self-Locking, Hexagon Head, Steel, Grade 5, UNC-2A and UNF-2A
MS35764	Bolt, Self-Locking, Hexagon Head, Steel, Grade 8, UNC-2A and UNF-2A

DRAWING

Federal Aviation Agency

D5225	Adapter Plates for LB-1 Lamp Bases

(Copies of specifications, standards, drawings, and publications required by suppliers in connection with specific procurement functions should be obtained from the procuring activity or as directed by the contracting officer.)

2.2 Other publication . The following document forms a part of this specification to the extent specified herein. Unless otherwise indicated, the issue in effect on date of invitation for bids or request for proposal shall apply.

American Society for Testing and Materials

ASTM A153-67	Zinc Coating (Hot-Dip) for Iron and Steel Hardware

(Application for copies should be addressed to the American Society for Testing Materials, 1916 Race Street, Philadelphia, Pennsylvania 19103.)

3. REQUIREMENTS

3.1 Qualification. The articles furnished under this specification shall be products which are qualified for listing on the applicable qualified products list at the time set for opening of bids (see 4.3 and 6.3).

3.2 Materials

* 3.2.1 Metals. The metals shall be as specified herein and on the Military Standard (MS) or FAA Drawing D5225, as applicable. Unless otherwise specified, metals shall be of the corrosion-resistant type or treated to resist corrosion. Dissimilar metals, when used, shall be in accordance with MIL-STD-889.

3.3 Design and construction. The design and construction shall be in accordance with the applicable MS or FAA Drawing D5225.

3.3.1 Bases (with flanged hubs). The bases shall be in accordance with MS24526. The cylinder, including sides and bottom, shall be fabricated of sheet steel. All seams shall be externally welded and watertight. The top flange shall be steel plate. After complete fabrication and galvanizing, the top surface of the flange shall lie entirely between two planes that are perpendicular to the light base axis and separated by 0.030 inch. The sidewall of the base shall lie entirely within two concentric right circular cylinders parallel to the light base axis and spaced 0.3 inch apart.

3.3.1.1 Base finish. After fabrication, the base shall be corrosion protected by hot-dip galvanizing in accordance with ASTM A153-67. Immediately after plating, the gasket surface (opposite end from flanges) shall be wiped smooth, suitable for a proper sealing surface.

3.3.1.2 Flange hubs. Two 2-inch steel tank flanges, or equivalent, shall be welded to the cylinder $180^{\circ} \pm 1^{\circ}$ apart, random location in relation to bolt holes in top flange, and shall not deviate more than 1° from the perpendicular to the base axis. Flange welds shall be continuous and external. Projection beyond the body of the base shall not exceed 2.5 inches. Threads shall be protected with an antiseize and anticorrosive compound.

3.3.2 Base plate assembly. The base plate assembly shall be in accordance with MS24345. Ferrous materials shall be used. After fabrication, hot-dip galvanizing shall be applied in accordance with ASTM A153-67. Immediately after plating, the gasket surface shall be wiped smooth, suitable for a proper sealing surface.

3.3.3 Adapter plate. The adapter plate shall be in accordance with FAA Drawing D5225. After fabrication, hot-dip galvanizing shall be applied in accordance with ASTM A153-67. Immediately after plating, the gasket surface shall be wiped smooth, suitable for a proper sealing surface.

3.3.4 Blank cover. Blank base covers used shall be in accordance with MS26580. After fabrication, hot-dip galvanizing shall be applied in accordance with ASTM A153-67. Immediately after plating, the gasket surface shall be wiped smooth, suitable for a proper sealing surface.

3.3.5 Gaskets and seal. Unless otherwise specified, all gaskets and seals shall be made of material as designated on the applicable MS.

* 3.3.5.1 Airport marker light base gasket. Marker light base gaskets shall be in accordance with MS26577. One gasket shall be packaged with each base plate assembly, adapter plate, or blank cover. Gaskets shall not be furnished with the bases.

3.3.6 Frangible coupling. Frangible couplings used with base plate assemblies shall be in accordance with MS17814.

3.3.7 Cable clamp. Cable clamps shall be in accordance with MS17815.

3.3.8 Washer seal. Six seal washers in accordance with MS21205 shall be supplied with each base plate assembly and blank cover.

3.3.9 Connector retainer. One steel connector retainer in accordance with MS24345 shall be supplied with each base plate assembly.

* 3.3.10 Instructions. Instructions for the installation and bolt torque requirements shall be included with the base plate assembly and blank cover. Bolt torque shall be listed at 50 ±5 inch-pounds (see figure 1).

3.4 Performance

3.4.1 Base leakage. When tested as specified in 4.6.1, there shall be no indication of leakage.

* 3.4.2 Design load. The base plate assembly and blank cover shall withstand a static load of 100,000 pounds due to an aircraft wheel or load being applied to it. There shall be no breakage or cracking of the base plate assembly or cover, nor deformation of steel plates that could cause leakage when tested as specified in 4.6.3.

3.5 Part numbering of interchangeable parts. All parts having the same manufacturer's part number shall be functionally and dimensionally interchangeable. The item identification and part number requirements of MIL-STD-100 shall govern manufacturer's part numbers and changes thereto.

3.6 Dimensions. All articles shall meet the dimensional requirements of the applicable MS or FAA Drawing D5225.

3.7 Identification of product. Markings of all articles shall include the MS part number, the manufacturer's name, abbreviation, trademark, and manufacturer's identification number. All identification shall be legible after galvanizing.

3.8 Workmanship. All components shall be fabricated and finished in a thoroughly workmanlike manner. Particular attention shall be given to freedom from blemishes and defects, marking, thoroughness of welding, galvanizing, and alignment of components.

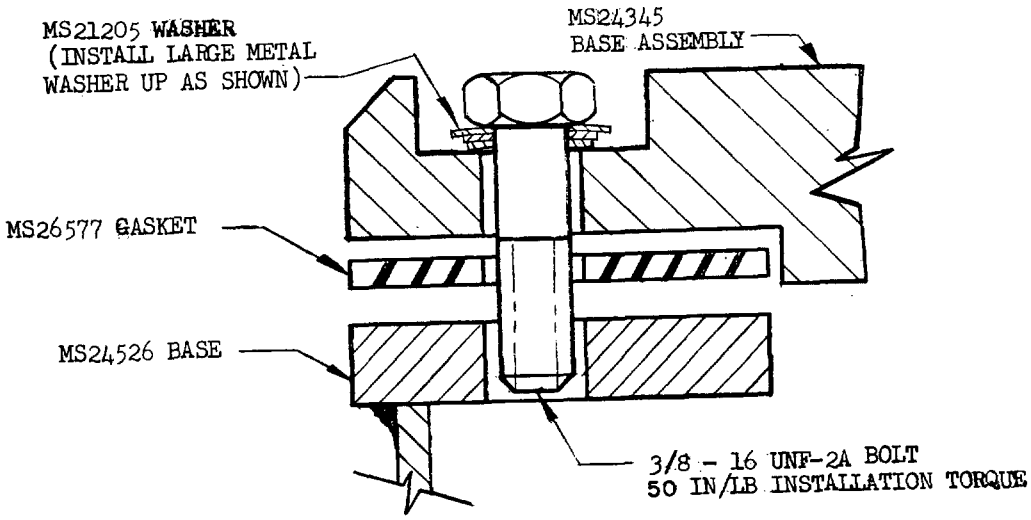

BOLT MOUNTING

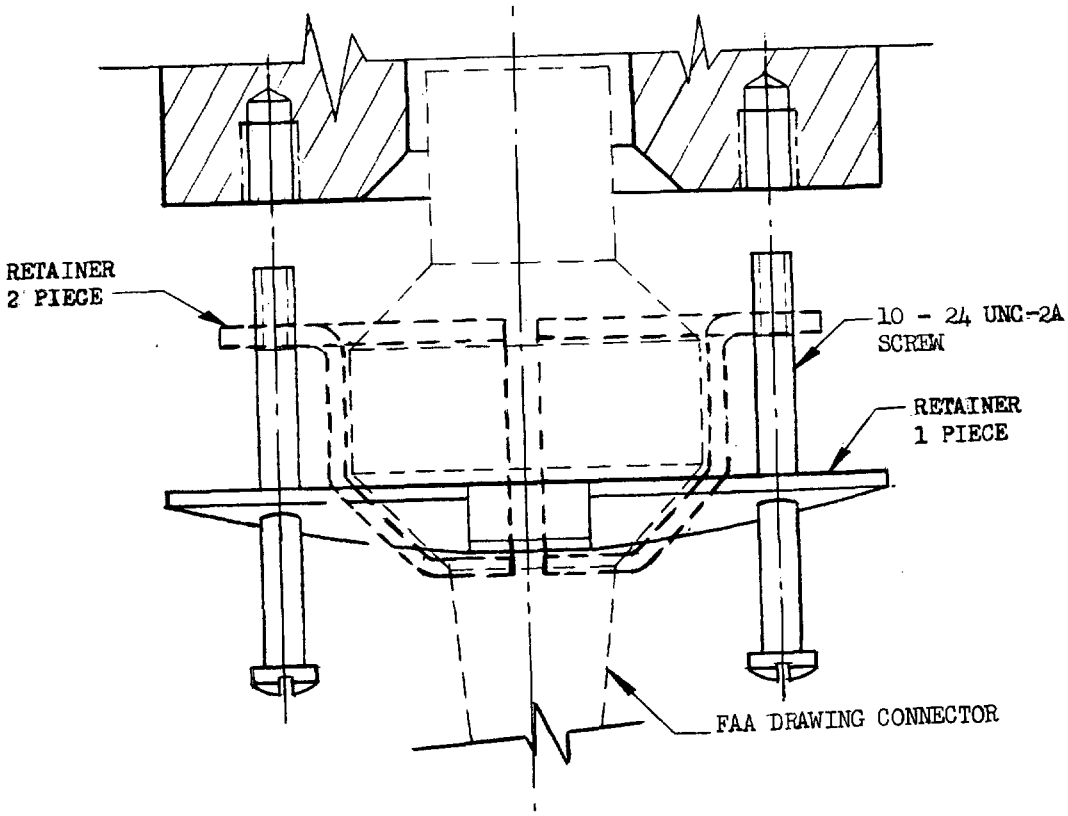

RETAINER MOUNTING

FIGURE 1. Mounting detail instructions

3.8.1 Cleaning. All components shall be thoroughly cleaned, and loose, spattered or excess welding, metal chips, and other foreign material removed during or after final assembly. Weld scale shall be removed before galvanizing.

4. QUALITY ASSURANCE PROVISIONS

4.1 Responsibility for inspection. Unless otherwise specified in the contract or purchase order, the supplier is responsible for the performance of all inspection requirements as specified herein. Except as otherwise specified in the contract or order, the supplier may use his own or any other facilities suitable for the performance of the inspection requirements specified herein, unless disapproved by the Government. The Government reserves the right to perform any of the inspections set forth in the specification where such inspections are deemed necessary to assure supplies and services conform to prescribed requirements.

* 4.2 Classification of tests. The inspection and testing of the articles shall be classified as follows:

a. Qualification testing . . . . . (4.3)

b. Quality conformance tests . . . . . (4.4).

* 4.3 Qualification testing (see 6.3)

4.3.1 Test samples. The test samples shall consist of one component of each manufacturer's part number upon which qualification is desired. Reports of tests performed on the samples shall be forwarded to the activity responsible for qualification, designated in the letter of authorization from that activity (see 6.3).

* 4.3.2 Test report. Upon completion of the qualification testing, a test report shall be prepared in accordance with MIL-STD-831.

* 4.3.3 Qualification tests. Qualification tests shall consist of all tests described under 4.5.

* 4.4 Quality conformance tests. Quality conformance tests shall consist of the following:

a. Individual test

b. Sampling tests.

* 4.4.1 Individual test. Each component shall be subjected to an examination of product test as described under 4.5.

* 4.4.2 Sampling tests

* 4.4.2.1 Sampling. One component shall be selected at random from each lot of 100 or fraction thereof produced and subjected to the following tests as described under 4.5:

a. Base leakage

b. Dimensions

c. Static load.

4.4.2.1.1 Lot. A lot shall consist of components manufactured under essentially the same conditions and submitted for tests at substantially the same time.

4.5 Test methods

4.5.1 Examination of product. Each component shall be examined to determine conformance to this specification with respect to materials, workmanship, and marking.

* 4.5.2 Base leakage. All holes in the base except those required to accommodate the pressure gage and air inlet shall be sealed. A blank cover conforming to MS26580 and matching gasket conforming to MS26577 shall be bolted to the top flange of the base. Suitable fittings with a pressure gage shall be connected to the base. Air pressure of 15 ±2 psi shall be applied to the assembly for 10 minutes. A high-foam detergent producing a low-surface tension shall be applied to all surfaces, including welds and joints. Any leakage indicated by bubbles shall be cause for rejection.

4.5.3 Dimensions. Articles selected as specified in 4.4.2.1 shall be checked for compliance with the dimensions of the applicable MS or FAA Drawing D5225.

* 4.5.4 Static load. The base plate assembly or blank cover, as applicable, shall be mounted on a rectangular cross-sectioned ring having an inside diameter of 8 inches and an outside diameter of not less than 12 inches. The ring shall be not less than 2 inches thick. Six equally spaced holes matching those provided on the top mounting surface of the MS24526-4 base shall be provided in the ring. The holes shall be of sufficient depth to accommodate 3/8-16 UNC-2A bolts when the base plate assembly or blank cover is mounted on the ring for test. A gasket conforming to MS26577-1 shall be installed

between the base plate assembly or blank cover as applicable, and the mounting surface of the test ring. Mounting bolts shall then be installed and drawn down as if the item was being installed on an MS24526-4 base. A load of 100,000 pounds shall be applied at a rate of approximately 20,000 pounds per minute to the top of the test item through a rubber or synthetic rubber block with a Shore A hardness of 60 +5. The block shall be 1-½ inches thick and at least 12 inches in diameter and centered on the test item. The rubber block shall be covered by a metal plate of sufficient thickness that it will not be physically deformed during the test. The plate shall be at least 12 inches in diameter and shall be centered on the ring and item being tested. Failure as evidenced by cracking or breaking of the test item before the applied load reaches 100,000 pounds shall be cause for rejection without further testing. Otherwise, the base plate assembly or blank cover, as applicable, shall be subjected to the leakage test in 4.5.2. A new gasket shall be installed between the test item and base, and all open holes in the base plate cover shall be sealed when the leakage test is conducted. Any leakage as indicated by bubbles between the base plate assembly or blank cover and the base shall be cause for rejection of the test item.

4.6 Inspection of preparation for delivery. The components shall be examined to determine that preservation, packaging, packing, and marking are in accordance with section 5.

5. PREPARATION FOR DELIVERY

* 5.1 Preservation, packaging, packing, and marking. Preservation, packaging, packing, and marking of bases and accessories shall be in accordance with the applicable requirements of MIL-E-17555 as specified (see 6.2). In addition, each base shall be provided with a plywood shipping cover and a polyethylene gasket for protection during shipment and installation. The cover shall conform to NN-P-530, exterior grade C-C, 3/4 inch plywood and shall be the same diameter as the top flange. The top of the plywood shall be counterbored 1.125 inches in diameter and 0.250 inch deep. The polyethylene gasket shall be a minimum 0.003 inch thick. The shipping cover shall be secured by three holddown bolts, made of cadmium-plated steel, 3/8-16 UNF-2A conforming to MS35763 and MS35764, 1-¼ inch long, 120° apart, and seated to 25 inch-pounds torque. Base flange hubs shall be provided with standard metal or plastic thread protectors.

6. NOTES

6.1 Intended use. The base and accessories covered by this specification are intended for use in the installation of airport marker lights.

6.2 Ordering data. Procurement documents should specify:

a. Title, number, and date of this specification

b. MS part number or FAA drawing number of component required (see 3.3)

* c. Selection of applicable level of preservation, packaging, and packing required (see 5.1).

6.3 Qualification. With respect to products requiring qualification, awards will be made only for products which are at the time set for opening of bids, qualified for inclusion in the applicable Qualified Products List whether or not such products have actually been so listed by that date. The attention of the suppliers is called to this requirement, and manufacturers are urged to arrange to have the products that they propose to offer to the Federal Government tested for qualification in order that they may be eligible to be awarded contracts or orders for the products covered by this specification. The activity responsible for the Qualified Products List is Aeronautical Systems Division (ASD), ATTN: ASNMT-40, Wright-Patterson Air Force Base, Ohio 45433, and information pertaining to qualification of products may be obtained from that activity.

6.4 Marginal indicia. The margins of this specification are marked to indicate where changes, deletions, or additions to the previous issue have been made. This is done as a convenience only and the Government assumes no liability whatsoever for any inaccuracies in these notations. Figures are not so marked. Bidders and contractors are cautioned to evaluate the requirements of this document based on the entire content as written, irrespective of the marginal notations and relationship to the last previous issue.

Custodians:
Navy - AS
Air Force - 11

Reviewers:
Navy - AS
Air Force - 82

Preparing activity:
Air Force - 11

Project No. 6210-F398

SPECIFICATION ANALYSIS SHEET

Form Approved
Budget Bureau No. 22-R255

INSTRUCTIONS: This sheet is to be filled out by personnel, either Government or contractor, involved in the use of the specification in procurement of products for ultimate use by the Department of Defense. This sheet is provided for obtaining information on the use of this specification which will insure that suitable products can be procured with a minimum amount of delay and at the least cost. Comments and the return of this form will be appreciated. Fold on lines on reverse side, staple in corner, and send to preparing activity. Comments and suggestions submitted on this form do not constitute or imply authorization to waive any portion of the referenced document(s) or serve to amend contractual requirements.

SPECIFICATION

ORGANIZATION

CITY AND STATE

CONTRACT NUMBER

MATERIAL PROCURED UNDER A

☐ DIRECT GOVERNMENT CONTRACT ☐ SUBCONTRACT

1. HAS ANY PART OF THE SPECIFICATION CREATED PROBLEMS OR REQUIRED INTERPRETATION IN PROCUREMENT USE?

   A. GIVE PARAGRAPH NUMBER AND WORDING.

   B. RECOMMENDATIONS FOR CORRECTING THE DEFICIENCIES

2. COMMENTS ON ANY SPECIFICATION REQUIREMENT CONSIDERED TOO RIGID

3. IS THE SPECIFICATION RESTRICTIVE?

   ☐ YES ☐ NO *(If "yes", in what way?)*

4. REMARKS *(Attach any pertinent data which may be of use in improving this specification. If there are additional papers, attach to form and place both in an envelope addressed to preparing activity)*

SUBMITTED BY *(Printed or typed name and activity - Optional)*

DATE

DD FORM 1 JAN 66 1426

REPLACES EDITION OF 1 OCT 54 WHICH MAY BE USED.

AFLC-WPAFB-OCT 67 2M