Downloaded from http://www.everyspec.com

MILITARY SPECIFICATION

BEARINGS, ELASTOMERIC
GENERAL SPECIFICATION FOR

This specification is approved for use by all Departments and Agencies of the Department of Defense.

1. SCOPE

1.1 Scope. This specification defines the requirements for spherical, radial-journal, conical and thrust bearings which are of laminated elastomeric construction. These bearings are for use in an environment having a temperature spectrum within a maximum ambient temperature range of -65°F to +160°F while reacting oscillating loads and motions.

1.2 Classification. Bearings shall be specified as the following types depending on usage:

Type I - Blade retention bearings

Type II - Control system bearings

Bearings shall be specified by the following classes depending on configuration.

Bearings containing one lamination:

Class A - Radial journal bearing (see Figure 1)
Class B - Conical bearing (see Figure 2)
Class C - Spherical thrust bearing (see Figure 3)
Class D - Thrust bearing (see Figure 4)
Class E - Spherical rod end bearing (see Figure 5)

Bearings containing two different laminations:

Class AE - Spherical radial journal bearing (see Figure 6)
Class BE - Spherical conical bearing (see Figure 7)

1.3 Part number. Specification part numbers will be as specified on the applicable specification sheets.

Beneficial comments (recommendations, additions, deletions) and any pertinent data which may be of use in improving this document should be addressed to: Systems Engineering and Standardization Department (Code 53), Naval Air Engineering Center, Lakehurst, NJ 08733, by using the self-addressed Standardization Document Improvement Proposal (DD Form 1426) appearing at the end of this document or by letter.

AMSC N/A FSC 3120
DISTRIBUTION STATEMENT A: Approved for public release; distribution is unlimited.

Downloaded from http://www.everyspec.com

2. APPLICABLE DOCUMENTS

2.1 Government documents.

2.1.1 Specifications and standards. The following specifications and standards form a part of this specification to the extent specified herein. Unless otherwise specified, the issues of these documents shall be those listed in the issue of the department of Defense Index of Specifications and Standards (DODISS) and supplement thereto, cited in the solicitation.

SPECIFICATIONS

FEDERAL

P-D-680	Dry Cleaning solvent
TT-M-261	Methyl Ethyl Ketone, Technical

MILITARY

MIL-P-116	Preservation, Methods of
MIL-B-197	Bearings, Antifriction, Associated Parts and Subassemblies, Preparation for delivery of
MIL-G-5572	Gasoline, Aviation, Grades 80/87, 100/130, 115/145
MIL-H-5606	Hydraulic Fluid, Petroleum Base, Aircraft, Missile, and Ordnance
MIL-T-5624	Turbine Fuel, Aviation, Grades JP-4 and JP-5
MIL-L-7808	Lubricating Oil, Aircraft Turbine Engine, Synthetic Base, NATO Code Number O-148
MIL-S-8879	Screw Threads, Controlled Radius Root With Increased Minor Diameter, General Specification for
MIL-L-23699	Lubricating Oil, Aircraft Turbine Engines, Synthetic Base
MIL-H-83282	Hydraulic Fluid, Fire Resistant, Synthetic Hydrocarbon Base, Aircraft, NATO Code Number H-537
MIL-C-87936	Cleaning Compounds, Aircraft Exterior Surface, Water Dilutable

Downloaded from http://www.everyspec.com

STANDARDS

MILITARY

DOD-STD-100	Engineering Drawing Practices
MIL-STD-105	Sampling Procedures and Tables for Inspection by Attributes
MIL-STD-129	Marking for Shipment and Storage
MIL-STD-810	Environmental Test Methods and Engineering Guidelines
MIL-STD-889	Dissimilar Metals
MIL-STD-1949	Inspection, Magnetic Particle
MIL-STD-6866	Inspection, Liquid Penetrant

(Copies of specifications, standards, drawings and publications required by manufacturers in connection with specific acquisition functions should be obtained from the contracting activity or as directed by the contracting officer.)

2.2 Other publications. The following documents form a part of this specification to the extent specified herein. Unless otherwise specified, the issues of the documents which are DOD adopted shall be those listed in the issue of the DODISS specified in the solicitation. Unless otherwise specified, the issues of documents not listed in the DODISS shall be the issue of the nongovernment documents which is current on the date of the solicitation.

Uniform Classification Committee

Uniform Freight Classification Rules

(Application for copies of the above publication should be addressed to the Uniform Classification Committee, 202 Chicago Union Station, Chicago, IL 60606.)

American National Standards Institute

ANSI B46.1 Surface Texture (Surface Roughness, Waviness and Lay)

(Copies of the above publication may be obtained from the American National Standards Institute, 1430 Broadway, New York, NY 10018.)

American Society for Testing Materials

F-25	Method for Sizing and Counting Airborne Particulate Contamination in Clean Rooms and Other Dust Controlled Area Designed for Electronic and Similar Applications
F-50	Practice for Continuous Sizing and Counting of Airborne Particles in Dust Controlled Areas Using Instruments Based Upon Light Scattering Principles

Downloaded from http://www.everyspec.com

(Copies of the above publications may be obtained from the American Society for Testing Materials, 1916 Race Street, Philadelphia, PA 19103, (215) 299-5400.)

Nongovernment standards and other publications are normally available from the organizations which prepare or which distribute the documents. These documents also may be available in or through libraries or other informational services.

2.3 Order of precedence. In the event of a conflict between the text of this specification and the references cited herein (except for associated detail specifications, specification sheets or MS standards), the text of this specification shall take precedence. Nothing in this specification, however, shall supersede applicable laws and regulations unless a specific exemption has been obtained.

3. REQUIREMENTS

3.1 Specification sheets. The individual item requirements shall be as specified herein and in accordance with the applicable specification sheet. In the event of any conflict between the requirements of this specification and the specification sheet, the latter shall govern.

3.2 Qualification. Bearings furnished under this specification shall be products which are authorized by the Qualifying Activity for listing on the applicable Qualified Products List at the time set for opening of bids (see 4.3 and 6.3).

3.2.1 Product change. Written approval from the qualifying activity is required for any change in product design, materials, elastomer compounds, metal surface treatments prior to elastomer molding, or bonding related operations. Resubmittal of bearings for qualification inspection may be required.

3.2.2 Requirements for qualification approval. Qualification approval is based on the satisfactory performance of test bearings to the requirements of this specification. Four test conditions have been established for evaluation of the elastomer/shim system used in these bearings. The test conditions and bearing configurations are given in Table V for two standard Type I blade retention bearings and two standard Type II control system bearings. To be listed on the Qualified Products List for all test conditions, the manufacturer must demonstrate compliance to the performance and environmental requirements specified in Tables I, V and VI. Satisfactorily demonstrating compliance to the requirements of test conditions 2 or 4 (Table V) shall also qualify the manufacturer for test conditions 1 or 3, respectively. A test configuration which meets the qualification approval criteria of this specification shall secure qualification approval for all production bearings having that test condition number listed on the specification sheet or drawing. The manufacturer shall bear all costs associated with the design, manufacture and testing of the standard bearing configurations.

Downloaded from http://www.everyspec.com

Prior to initiating the evaluation tests, the manufacturer shall notify the qualifying agency (Naval Air Development Center) of the intention to submit for qualification approval. The letter of notification shall state the proposed date of initiation of the tests, and the test condition for which qualification approval is desired. Upon completion of the test program, the test data shall be reported in accordance with 3.2.5. (Note: Data generated during the development phase is not acceptable.) The report shall be submitted to the Naval Air Development Center (Code 6061), Warminster, PA 18974-5000.

3.2.2.1 Retention of qualification. To maintain status on a Qualified Products List (QPL), certification shall be submitted at two year intervals to indicate continued compliance with the requirements of this specification (see 4.3.1).

3.2.3 Performance requirements for qualification test bearings. The bearings for qualification testing shall be standard blade retention bearings (Type I, Class C) designed for operation at 300 and 1500 CPM (see Figures 9 and 10) and standard control system bearings (Type II, Class E) also designed for operation at 300 and 1500 CPM (see Figures 11 and 12).

3.2.3.1 Static spring rates. The axial, radial, torsional and cocking static spring rates shall be measured (see 4.7.3) and be as specified in Table V.

3.2.3.2 Low temperature spring rate characteristic. The shear stiffening factor (see 6.5.1) shall be measured at -65°F (-54°C) and -45°F (-43°C) in accordance with 4.7.7.7 and be within the limits shown in Figure 8.

3.2.3.3 Static strength. The minimum axial or radial static strength of the bearings shall be measured (see 4.7.5) and not be less than specified in Table V.

3.2.3.3.1 Static strength of Type I, Class C, 300 CPM test bearings. The static axial strength of the bearing shall be determined by applying a cocking angle of 17 degrees simultaneously with increasing axial load. The bearing shall meet an axial load of 73,000 pounds minimum without catastrophic failure (buckling).

3.2.3.3.2 Droop stop test for Type I, Class C, 300 CPM test bearings. The bearing shall pass a droop stop test consisting of 3500 pounds axial tensile load combined simultaneously with 10,000 pounds radial load applied to the bearing without evidence of permanent damage to the bearing components. Each bearing shall be tested up to the maximum loads for 8000 cycles with a minimum of 2800 cycles equally spaced throughout the endurance test (one cycle every 15 minutes) and the balance at the completion of the endurance test.

3.2.3.3.3 Radial static strength with axial load, Type I, Class C, 1500 CPM test bearings. The bearing shall pass a radial static strength test by applying an axial load of 200 pounds simultaneously with 500 pounds radial load without evidence of permanent damage to the bearing components.

Downloaded from http://www.everyspec.com

3.2.3.4 Endurance tests. The bearings shall be tested without failure as defined in Table IV (see 4.7.6) for 700 hours under the loads and motions specified in Table V. If no failures occur, one bearing shall continue to be tested until failure or 2100 hours of total test time has been obtained.

3.2.3.4.1 Start-stop cycles for Type I, Class C bearings. Each bearing shall be start-stop tested (see 4.7.6.1) up to the maximum loads specified in Table V for 8000 cycles with a minimum of 2800 cycles equally spaced throughout the endurance test (one cycle every 15 minutes) and the balance at the completion of the endurance test.

3.2.3.4.2 Control check cycles for Type II, Class E bearings. Each bearing shall be control check tested (see 4.7.6.2) at the motions specified in Table V for 8000 cycles with a minimum of 2800 cycles equally spaced throughout the endurance test (one cycle every 15 minutes) and the balance at the completion of the endurance test.

3.2.4 Environmental requirements for qualification test bearings. A test bearing shall be subjected to the following environmental conditions:

a. Salt fog (see 4.7.7.2)

b. Fungus (see 4.7.7.3)

c. Ozone (see 4.7.7.4)

d. Hydraulic fluid (see 4.7.7.5a)

e. High temperature (see 4.7.7.6)

After exposure to the environmental conditions, the bearing shall be endurance tested (see 4.7.6) for 700 hours under the loads and motions specified in Table V.

3.2.5 Requirements for recording design and test data. The test data shall be recorded and summarized in report form. To insure statistical accuracy of test data, the bearing supplier (or the testing laboratory) shall certify that the data presented is the performance data for all bearings tested and that no data has been deleted. Any test malfunction resulting in an invalid test shall be noted in the report. A dated drawing completely describing the dimensions, heat treatment, surface finish and elastomer designation of the bearing shall be included.

3.3 First article. The first article shall be the first production lot consisting of complete bearings. The manufacturer shall furnish sample units for first article inspection (see 4.4) and approval (see 6.4). Unless otherwise specified in the contract or order, first article shall not be required on subsequent production lots.

3.4 Materials. Materials shall be as specified on the applicable specification sheet or drawing. Unspecified materials shall be at the option of the bearing manufacturer subject to the limitations of 3.2.1.

Downloaded from http://www.everyspec.com

3.4.1 Elastomer and nonmetallic materials. The elastomer used in the fabrication of the bearing shall be selected by the manufacturer and have been tested and approved in accordance with 4.7.7. Nonmetallic materials shall be resistant to all hydraulic fluids, lubricating oils and preservative compounds throughout temperature ranges specified herein.

3.4.2 Bonding, materials and processes. Procedures for bonding and molding of the bearing shall be determined by the manufacturer, subject to the requirements of this specification.

3.4.3 Corrosion resistance of metal parts. Metal parts shall have corrosion-resistant characteristics (or shall be suitably protected by coatings) to resist corrosion which may result from moisture, salt spray and/or high temperature. Dissimilar metals as defined in MIL-STD-889 which are in direct contact with each other shall be avoided. If unavoidable, such bi-metallic couples shall be protected with appropriate plating or finishes, insulating tapes, sealants or other approved methods in accordance with MIL-STD-889.

3.5 Design and construction. The production bearing design and construction (e.g., dimensions, materials, finishes, heat treatment, etc.) shall be as specified herein and in accordance with the applicable drawing. The detail mechanical design of the bearing including elastomeric edge contouring and the design of the rubber/shim package (alternating layers of rubber and metal) shall be accomplished by the manufacturer, subject to the requirements of this specification and the applicable referenced specifications, publications and drawings. The requirements of this specification are detailed only to the extent considered necessary to obtain the desired mechanical characteristics, performance and permanency of the bearings. Upon acceptance of the first bearing by the procuring agency, the manufacturer shall make no change in materials, design, manufacture or process without written approval of the procuring agency (see 3.2.1).

3.5.1 Dimensions and tolerances. Dimensions and tolerances shall be as specified on the applicable drawing or specification sheet. Dimensions not specified shall be at the option of the manufacturer. The dimensions specified shall be measured after plating and before load deflection tests.

3.5.2 Elastomeric parts shelf life. The shelf life of these bearings shall be five years from the date of manufacture.

3.5.3 Standard and commercial parts. Standard parts shall be used whenever they are suitable and shall be identified on the manufacturer's drawing by their part number. Commercial parts may be used provided they conform to all requirements specified herein.

3.5.4 Threaded parts. Materials for threaded parts shall be selected or treated to preclude galling or seizing. Threads shall be in accordance with MIL-S-8879.

Downloaded from http://www.everyspec.com

3.5.5 Surface texture. Surface texture of the metal parts used in the bearings shall not be more than Ra 125 when checked in accordance with ANSI B46.1.

3.5.6 Weight. The maximum weight of the bearings shall be as specified on the applicable drawing.

3.6 Production identification and marking. Each bearing shall be permanently and legibly marked with the manufacturer's identification, part number, date of manufacture and lot number or serial number. Where space permits, other information as specified on the applicable specification sheet or drawing shall be marked. Metal impression stamping is prohibited.

3.6.1 Specification part number. The specification part number shall be as defined on the applicable specification sheet or drawing.

3.7 Interchangeability. All bearings having the same part number shall be directly and completely interchangeable with each other with respect to installation and performance. The drawing part number requirements of DOD-STD-100 shall govern documentation of and changes in the manufacturer's part number.

3.8 Performance requirements. The bearings shall meet all specified mechanical characteristics and have a test life without failure as defined in Table IV of 1.33 times the specified service life required on the applicable drawing when tested to the conditions on that drawing. The bearings shall also meet these requirements during and after exposure to the environmental conditions (and possible combinations of) listed herein. The combinations of environments do not imply mixtures of fluids. The appearance of surface cracks or surface deterioration due to environmental exposure shall not constitute failure but shall be evaluated by the manufacturer and the procuring agency as to its possible impact on the service life of the bearings. At the bearing manufacturer's option, a standard laboratory shear test specimen may be used to demonstrate bearing performance under environmental conditions. If used, the test specimen shall be made of the same elastomer formulation specified on the applicable drawing (but not necessarily the same modulus).

3.8.1 Service life. The bearings shall have a service life of not less than that required on the applicable drawing.

3.8.2 Mechanical characteristics.

3.8.2.1 Static spring rates. The static spring rates shall be as specified on the applicable specification sheet or drawing (see 4.7.3).

3.8.2.2 Static axial strength. The minimum static axial strength of the bearings shall be as specified on the applicable specification sheet or drawing (see 4.7.5 and 4.7.5.1).

Downloaded from http://www.everyspec.com

3.8.2.3 Static radial strength. The minimum static radial strength of the bearings shall be as specified on the applicable specification sheet or drawing (see 4.7.5, 4.7.5.2 and 4.7.5.3).

3.8.2.4 Low temperature spring rate characteristics. The bearings shall provide shear stiffening factor characteristics at -65°F (-54°C) and -45°F (-43°C) within the limits shown on Figure 8 (see 4.7.7.7).

3.8.2.5 Bearing motions. The bearings shall accommodate the maximum motions as specified on the applicable specification sheet or drawing without bond failure or metal-to-metal contact.

3.8.3 Environmental conditions.

3.8.3.1 Humidity. The bearings shall withstand the effects of a relative humidity up to 100 percent including conditions where condensation occurs.

3.8.3.2 Salt fog. The bearings shall withstand exposure to salt-sea atmosphere.

3.8.3.3 Fungus. The bearing shall withstand exposure to fungus growth as encountered in tropical climates.

3.8.3.4 Ozone. The bearings shall withstand exposure to a concentration of 25 ± 5 parts per hundred million (pphm) of ozone in air by volume.

3.8.3.5 Fluid exposure. The bearings shall withstand limited exposure to MIL-H-5606 and MIL-H-83282 hydraulic fluids, MIL-L-7808 and MIL-L-23699 lubricating oils, MIL-T-5624 turbine fuel, MIL-G-5572 gasoline, P-D-680 Type I dry cleaning solvent, TT-M-261 methyl ethyl ketone solvent and MIL-C-87936 washing detergents.

3.8.3.6 Sunlight. The bearings shall withstand exposure to sunlight as encountered in desert areas.

3.8.3.7 Temperature. The bearings shall operate in an environment having a temperature spectrum within a maximum ambient atmospheric temperature range of -65°F (-54°C) to +160°F (+71°C).

3.8.3.8 Storage. The bearings shall withstand storage in the following environments:

a. High temperature - 190°F (88°C) for 1 hour/24 hour day for 30 days

b. High humidity - 95 percent relative humidity at 150°F (66°C) for 6 hours/24 hour day for 30 days

Downloaded from http://www.everyspec.com

3.9 Process control inspection. Process control inspections consist of examinations and tests that will be performed on the bearing prior to or at the appropriate stage of manufacture. Process control inspections include:

Nomenclature	Requirement Paragraph	Test Method Paragraph
Elastomer bond evaluation	3.9.1	4.7.2.1
Ultimate bond failure criteria	3.9.2	4.7.2.2
Material defect inspection	3.9.3	4.7.2.3
Elastomer-to-metal orientation	3.9.4	4.7.2.4

3.9.1 Elastomer bond evaluation. The elastomer-to-metal bond of each bearing shall be evaluated by a proof test of predetermined load/deflection criteria that will reveal a poor quality bond without causing permanent damage to the bearing.

3.9.2 Ultimate bond failure criteria. The first bearing bonded in each production lot (or a bearing selected at a predetermined frequency of bonding sequence) shall be tested to ultimate bond failure for purposes of evaluating the bond strength and monitoring process control.

3.9.3 Metallic material defects inspection. Prior to bonding with elastomer, all bearing parts made of metallic materials shall be inspected for cracks or other defects in accordance with the requirements of MIL-STD-6866 or MIL-STD-1949 as required by the specification sheet or applicable drawing.

3.9.4 Elastomer-to-metal orientation. The elastomer-to-metal orientation shall be verified by x-ray techniques as specified on the applicable drawing.

3.10 Test records. During normal production, the bearing manufacturer shall maintain a record showing quantitative results of all inspections and tests for eight years. This record shall be available to the procuring activity and shall be signed by an authorized representative of the manufacturer or the testing laboratory.

3.10.1 Elastomer cure records. A record of the elastomer compounding and bonding temperature/pressure/time cycle shall be maintained for each bearing fabricated and delivered.

3.10.2 Metallic material certification. The vendor shall maintain certified test reports for all metal compounds used in the bearing. The reports shall contain actual results of all tests as required by the applicable materials specification and mechanical properties after heat treatment. The serial number assigned to a particular bearing shall be traceable to the test reports.

Downloaded from http://www.everyspec.com

3.11 Safety. The bearings shall be safe to service, inspect, maintain and install. The bearings shall be constructed so that components do not have exposed sharp edges that would be hazardous to personnel.

3.12 Process controls. All fabrication of the elastomeric bearing involving application or mixing of adhesive, and all procedures for bonding the elastomer to the metallic materials prior to installation of the assembly into the press, shall be conducted in a controlled area. The controlled area shall be maintained at a temperature of 75° ± 10°F with a maximum relative humidity of 75 percent. The enclosed atmosphere of the work area shall be well ventilated and maintained so that the particle count is 2500 maximum for particles 5.0 microns or larger when measured in accordance with ASTM F-25 or ASTM F-50. The particle count measurement shall be performed annually (minimum). There shall be no eating or smoking in the controlled area and no process which produces uncontrolled spray, dust, fumes or particulate matter.

3.13 Workmanship. Workmanship shall conform to high grade aircraft practice to ensure safety, specified operations and service life. Particular attention shall be given to neatness and thoroughness of marking parts, finish and bonding.

4. QUALITY ASSURANCE PROVISIONS

4.1 Responsibility for inspection. Unless otherwise specified in the contract or purchase order, the contractor is responsible for the performance of all inspection requirements specified herein. Except as otherwise specified in the contract or purchase order, the contractor may use his own or any other facilities suitable for the performance of the inspection requirements specified herein, unless disapproved by the Government. The Government reserves the right to perform any of the inspections set forth in the specification where such inspections are deemed necessary to assure supplies and services conform to prescribed requirements.

4.1.1 Responsibility for compliance. All items must meet all requirements of Sections 3, 4 and 5. The inspection set forth in this specification shall become a part of the contractor's overall inspection system or quality program. The absence of any inspection requirements in the specification shall not relieve the contractor of the responsibility of assuring that all products or supplies submitted to the Government for acceptance comply with all requirements of the contract. Sampling in quality conformance does not authorize submission of known defective material, either indicated or actual, nor does it commit the Government to acceptance of defective material.

4.1.2 Test equipment and inspection facilities. The manufacturer shall provide the necessary test equipment and inspection facilities to perform the tests and inspections specified herein. The accuracy of the test and measurement equipment shall be at least 10 times better than the accuracy of the parameter to be measured. The test and measurement equipment used for the required tests and inspections shall be subjected to periodic calibration tests to verify equipment accuracy and performance.

Downloaded from http://www.everyspec.com

4.1.3 Tolerances of test equipment. Unless otherwise specified, the maximum allowable tolerances of test equipment shall be as follows:

a. Accuracy of temperatures shall be within 2.5°F.

b. Accuracy of imposed loads and motions shall be within 8 percent (except for measurement system errors which shall not exceed 3 percent).

4.2 Classification of inspection. The examinations and tests of bearings shall be divided into the following classifications:

Classification	Paragraph
Qualification inspection	4.3
First article inspection	4.4
Process control inspection	4.5
Quality conformance inspection	4.6

4.3 Qualification inspection. Qualification inspections shall be conducted on qualification test bearings and shall consist of the tests listed in Table I.

4.3.1 Retention of qualification. The continued listing of a product on the Qualified Products List is dependent upon a periodic verification of the manufacturer's continued compliance with the requirements of this specification and with standardization regulations. As part of that verification process, each manufacturer must complete DD Form 1718 during May of each even numbered year. This form, supplied by the qualifying activity, is to be signed by a responsible official of management and sent to the Naval Air Engineering Center, Systems Engineering and Standardization Department (Code 5311), Lakehurst, NJ 08733-5100.

4.4 First article. The first article inspection shall consist of the inspections listed in Table II. The requirements of Table II may be satisfied only by actual data from tests on the first lot of bearings produced (see 3.3). Five bearings shall be selected from this lot and subjected to the tests in Table II in the order in which they are listed. Unless otherwise specified, the first article inspection report format shall be in accordance with Table II.

4.5 Process control inspection. Process control inspections of 3.9 shall be performed and the data recorded and supplied with the first article or the production bearing lot, whichever is applicable.

4.6 Quality conformance inspection. Each bearing submitted for acceptance under a contract or purchase order shall have satisfactorily completed the acceptance tests in Table III in the order in which they are listed.

Downloaded from http://www.everyspec.com

4.6.1 Sampling inspection. Production bearings selected in accordance with MIL-STD-105 shall be subjected to the tests specified in Table III. The inspection lot shall be those bearings manufactured from one batch of elastomer and made sequentially within the time period established for that elastomer compound.

4.6.2 Resubmitted inspection lots. When the failure rate exceeds the acceptance testing criteria specified in 4.6.1, the item shall be rejected and no items still on hand, or those later produced, shall be accepted until the extent and cause of failures are determined.

4.6.3 Quality assurance certification. For each inspection lot, the manufacturer shall maintain, for not less than 8 years, and supply to the purchaser upon demand, certified copies of all records of quality conformance inspections. These records and certifications shall identify the manufacturer of the bearings, the address of the manufacturing plant, the procuring activity and the purchase order number (see 6.2).

4.7 Test methods.

4.7.1 Test conditions. Except as otherwise specified, all inspections and tests shall be made at the following conditions:

a.	Temperature:	Unless otherwise specified, all tests shall be conducted at a room temperature of 75° ± 15°F. Actual temperatures shall be recorded during all qualification tests.
b.	Barometric pressure:	Local ambient
c.	Relative humidity:	90 percent or less
d.	Static test loads:	When a test specimen is used in lieu of a bearing, the test specimen shall be subjected to a static compression strain of 5 percent and a static shear strain of 25 percent applied simultaneously during all environmental tests.

Unless otherwise specified, the bearings shall be mounted in a test fixture which simulates the actual installation and which has been approved by the qualifying activity or by the cognizant engineering activity of the procuring agency.

4.7.2 Process control verification.

4.7.2.1 Elastomer bond proof test. Each production bearing shall be installed in a suitable test fixture and subjected to a proof test using procuring agency approved load/deflection criteria that will reveal an unsatisfactory elastomer-to-metal bond without causing permanent damage to the bearing.

Downloaded from http://www.everyspec.com

4.7.2.2 Ultimate bond failure test. The test bearings shall be installed in a suitable test fixture and loaded to test the elastomer bond to failure (see 4.7.5). The outer member shall be deflected away from the inner member at a rate not to exceed one inch per minute. The loading shall continue until bond failure occurs. The deflection versus load data shall be continually recorded throughout the test.

4.7.2.3 Metallic material defects inspection. Before bonding with elastomer, each part of the bearing made of metallic materials shall be subjected to inspection in accordance with MIL-I-6868 or MIL-I-6866 as required by the applicable drawing. Cracks or other injurious defects disclosed by the inspection shall be cause for rejection.

4.7.2.4 Elastomer-to metal orientation inspection. All bearings containing shims shall be x-ray inspected to verify proper elastomer-metal orientation.

4.7.3 Static spring rate test. The bearing specimen shall be installed in a suitable test fixture and subjected to the applicable static spring rate test specified herein. For all directions, spring rate shall be calculated from third cycle load deflection characteristics. Speed of loading shall be an approximate constant velocity which penetrates maximum deflection in approximately one minute. Spring rate criteria shall be as specified on the applicable drawing.

4.7.3.1 Compression spring rate. Compression spring rate shall be determined by loading the bearing from zero to 1.1 times the maximum operating compression load specified on the applicable drawing. Spring rate shall be determined by dividing the operating compression load by the deflection at that load.

4.7.3.2 Axial shear spring rate. Axial shear spring rate shall be determined by loading the bearing to provide a deflection from zero to approximately 150 percent shear strain. Spring rate shall be determined by dividing the load at 35 percent shear strain by the deflection at 35 percent shear strain.

4.7.3.3 Torsional shear spring rate. Torsional shear spring rate shall be determined by loading the bearing to provide an angular deflection cycle equivalent to approximately ± 150 percent shear strain followed by two cycles providing approximately ± 35 percent shear strain. Spring rate shall be determined at approximately ± 35 percent shear strain.

4.7.3.4 Cocking shear spring rate. Cocking shear spring rate shall be determined by loading the bearing to provide an angular deflection cycle equivalent to approximately ± 150 percent shear strain, followed by two cycles providing approximately ± 35 percent shear strain. Spring rate shall be determined by dividing the peak-to-peak torque by the peak-to-peak deflection at approximately ± 35 percent shear strain.

Downloaded from http://www.everyspec.com

4.7.4 Acceptance static spring rate test. Each production bearing shall be installed in a suitable test fixture and subjected to the static spring rate tests specified on the applicable drawing. The tests shall be performed and the spring rate determined in accordance with the applicable requirements of 4.7.3.

4.7.5 Static strength tests. The production bearing shall be installed in a suitable test fixture and subjected to the appropriate strength tests specified in Table VI. A continuous record shall be provided showing a plot of deflection versus load throughout the test.

4.7.5.1 Axial static strength. The axial strength of the bearing shall be evaluated by applying a load equivalent to two times the maximum design axial load specified on the applicable drawing or until the bearing buckles, whichever is less.

4.7.5.2 Radial static strength. The radial strength of the bearing shall be evaluated by applying a load equivalent to two times the maximum design radial load specified on the applicable drawing.

4.7.5.3 Radial static strength with axial load. The radial strength of the bearing shall be evaluated by applying a load equivalent to two times the maximum design radial load specified on the applicable drawing while imposing an axial load equal to the design axial load.

4.7.6 Endurance test. The production bearing shall be installed in a suitable test fixture with test conditions as specified in 4.7.1. The test load and motion requirements shall be as specified on the applicable drawing. Evidence of any of the failure conditions listed in Table IV during the test shall be cause for rejection.

4.7.6.1 Start-stop cycle tests. The bearing shall be subjected to start-stop tests. These tests will load the bearing from zero to maximum load to zero at a frequency no greater than 30 CPM. The number of cycles, loads and motion shall be as specified on the applicable drawing.

4.7.6.2 Control check tests. The bearing shall be subjected to control check tests. These tests are intended to simulate the high angular motion encountered during helicopter control check tests. The test shall consist of a complete torsion cycle followed by a complete cocking cycle at an angular velocity not exceeding 50 degrees per minute. A complete cycle consists of angular motion from zero to maximum and back to zero. The number of cycles and motion shall be as specified on the applicable drawing.

4.7.7 Environmental test. A standard test specimen or a bearing which is representative of the production bearing shall be subjected to the environmental tests and conditions specified herein. The test specimens or bearing shall be subjected to the applicable spring rate tests (see 4.7.3) before and after each test.

4.7.7.1 Humidity. The test specimen shall be subjected to a humidity test in accordance with MIL-STD-810, Method 507, Procedure II.

Downloaded from http://www.everyspec.com

4.7.7.2 Salt fog. The test specimen shall be subjected to a salt fog test in accordance with MIL-STD-810, Method 509, Procedure I with the length of exposure to be 168 hours minimum.

4.7.7.3 Fungus. The test specimen shall be subjected to a fungus test in accordance with MIL-STD-810, Method 508.

4.7.7.4 Ozone. The test specimen shall be exposed to an air atmosphere containing 25 ± 5 parts per hundred million ozone by volume, for a minimum of 48 hours.

4.7.7.5 Fluid exposure. The test specimen shall be subjected to the fluid exposure/clean cycle test specified herein and shall not be adversely affected by exposure to the following fluids:

a. Hydraulic fluid, MIL-H-5606 and MIL-H-83282

b. Lubricating oils, MIL-L-7808 and MIL-L-23699

c. Jet fuel, MIL-T-5624

d. Gasoline, MIL-G-5572

e. Dry cleaning solvent, P-D-680, Type I

f. Solvent, TT-M-261, Methyl ethyl ketone

g. Washing detergents, MIL-C-87936

The fluid exposure/clean cycle shall consist of wiping the test specimen with a cloth soaked in the particular fluid until the elastomer surface is thoroughly wet. After 24 hours, the fluid shall be removed from the elastomer surface with denatured alcohol. The 24 hour exposure/clean cycle shall be repeated for not less than 4 cycles.

4.7.7.6 High temperature exposure. The test specimen shall be subjected to a high temperature test in accordance with MIL-STD-810, Method 501, Procedure I, except that the maximum temperature shall be 160°F (71°C) for a minimum period of 4 hours with a static compression strain of 5 percent applied.

4.7.7.7 Low temperature spring rate test. The test specimen shall be installed in a suitable test fixture and subjected to the following tests at -65°F and -45°F.

4.7.7.7.1 Minus 65°F test. The test specimen and test fixture shall be soaked at an ambient air temperature of -65°F ± 3°F (-53.89°C ± 1.69°C) for not less than four hours. For the soaking period and during the test, air at -65°F shall be circulated around the test specimen and fixture. At the end of the soaking period, the test specimen shall be subjected to a shear strain cycle of approximately ± 35 percent (the same deflection used for the acceptance static spring rate tests) applied sinusoidally at the design frequency without static precompression superimposed. The stiffening factor

Downloaded from http://www.everyspec.com

shall be plotted over the range of 1 to 12,500 cycles (see 6.5.1). The shear stiffening characteristics shall be within the static precompression shown on Figure 8.

4.7.7.7.2 Minus 45°F test. The test specimen and fixture shall be soaked and tested in the same manner as described in 4.7.7.7.1, except that the ambient air temperature shall be at -45°F ± 3°F (-42.78°C ± 1.07°C).

4.7.7.8 Storage exposure. The test specimen shall be installed in a suitable test fixture and subjected to the static load conditions specified while being exposed to the following atmospheric storage environments:

a.	High temperature:	190°F (87.8°C) for 1 hour/24 hours for 30 days 150°F (65.6°C) for 6 hours/24 hours for 30 days
b.	Humidity:	95 percent relative humidity at 150°F for 6 hours/24 hours for 30 days

4.7.7.9 Sunlight exposure. The test specimen shall be subjected to a sunshine exposure test in accordance with MIL-STD-810, Method 505, Procedure I.

4.8 Examination of product. The bearing shall be examined to determine conformance to the requirements of this specification and the applicable drawing for dimensions, finish, plating, identification of product, workmanship and requirements not covered by tests.

5. PREPARATION FOR DELIVERY

5.1 Packaging. Packaging shall be in accordance with MIL-B-197, Level A or commercial packaging with the following exceptions:

a. Bearings shall not be contaminated with cleaning solvents, grease or oil.

b. Prior to packaging, bearings shall be cleaned in one of the following ways:

1. Clean using dry compressed air in accordance with MIL-P-116.

2. Wipe with soft, clean cloth in accordance with MIL-P-116.

3. Use manufacturer's established cleaning procedures for the bearing.

Unit packages shall have the manufacturer's lot number or serial number, date of manufacture (month and year) and specification part number marked on each package.

5.2 Packing. Packing shall be in accordance with MIL-B-197, Level A, B or C as specified (see 6.2).

Downloaded from http://www.everyspec.com

5.3 Marking. Interior packages and exterior shipping containers shall be marked in accordance with MIL-STD-129. The marking shall include the nomenclature "Bearings, Elastomeric" and the applicable specification or drawing part number.

6. NOTES

6.1 Intended use. The bearings are intended for use in critical helicopter applications where they are subjected to a spectrum of superimposed dynamic loads and motions.

6.2 Ordering data.

6.2.1 Acquisition requirements. Acquisition documents shall specify the following:

a. Title, number and date of this specification.

b. Applicable specification sheet or drawing.

c. Specification part number per specification sheet or drawing (see 3.6.1).

d. First article certification (see 4.4).

e. Quality assurance certification (see 4.6.3).

f. Applicable levels of packaging (see 5).

6.3 Qualification. With respect to products requiring qualification, awards will be made only for products which are at the time set for opening of bids, qualified for inclusion in Qualified Products List 85598, whether or not such products have actually been so listed by that date. The attention of the contractors is called to these requirements and manufacturers are urged to arrange to have the products that they propose to offer to the Federal Government tested for qualification in order that they may be eligible to be awarded contracts or purchase orders for the products covered by this specification. The activity responsible for the Qualified Products List is the Naval Air Engineering Center, Systems Engineering and Standardization Department (Code 5311), Lakehurst, NJ 08733-5100; however, information pertaining to qualification of products may be obtained from the Naval Air Development Center (Code 6061), Warminster, PA 18974-5000.

6.4 First article. When procured by a Government activity, the first article shall be tested and approved under the provisions of the Federal Acquisition Regulations (FAR) 7-104.55. The first article shall be a first production item consisting of complete bearings from the first production lot. The contracting officer should include specific instructions regarding arrangements for examinations, tests and approval of the first article.

Downloaded from http://www.everyspec.com

6.5 Definitions.

6.5.1 Stiffening factor calculation. The stiffening factor equals the dynamic shear stiffness at the specified test temperature divided by the dynamic shear stiffness at 75° ± 10°F with both shear stiffness values reached at the same dynamic input.

6.6 Drawing information requirements. In addition to those requirements outlined by DOD-STD-100 for drawings and MIL-STD-961 "Military Specifications and Associated Documents, Preparation of" for specification sheets, each specification sheet or airframe manufacturer's drawing should contain the following:

a. Specification MIL-B-85598 forms a part of this drawing.

b. Dimensions to be 100 percent inspected (code to the intended dimensions).

c. Cement and elastomer flash not permitted on these surfaces (code to the critical surfaces).

d. Maximum weight _____ pounds.

e. Spring rates (select the spring rate to be checked) to be 100 percent measured for production acceptance.

Axial	_____	lb/in	(if applicable,
Radial	_____	lb/in	specify maximum or
Torsion	_____	in-lb/deg	minimum values)
Cocking	_____	in-lb/deg	

f. Include load/motion spectrum, percent of occurrence, maximum loads/motions, frequency (cpm).

g. Part marking to be located on this surface (code to surface where part marking is to be located).

h. For the inner and outer members specify the material and heat treat to be used (does not include shims and elastomer).

6.7 Subject term (key word listing).

Bearing, Conical
Bearing, Control System
Bearing, Elastomeric
Elastomeric

Custodians:
Navy - AS
Air Force - 99
Army - AR

Review Activities:
Air Force - 84
Army - AV
DLA - IS

Preparing Activity:
Navy - AS
(Project No. 3120-0686)

Downloaded from http://www.everyspec.com

TABLE I. Qualification inspections for qualification test bearings.

Inspection	Requirement Paragraph	Test Method Paragraph	Samples To Be Tested
Examination of Product	3.4, 3.5, 3.6	4.8	100%
Elastomer Bond Evaluation	3.9.1	4.7.2.1	100%
Bond Test to Ultimate Failure	3.9.2	4.7.2.2	2
Metallic Material Defects	3.9.3	4.7.2.3	100%
Elastomer-to-Metal Orientation	3.9.4	4.7.2.4	100%
Axial/Radial Spring Rate	3.2.3.1	4.7.3	4
Torsional/Cocking Spring Rate	3.2.3.1	4.7.3	100%
Low Temperature Spring Rate Characteristics	3.2.3.2	4.7.7.7	1
Static Strength	3.2.3.3	4.7.5	1
Endurance Test	3.2.3.4	4.7.6	6
Environmental Test	3.2.4	4.7.7	1

TABLE II. First article inspection.

Inspection	Requirement Paragraph	Test Method Paragragh	Samples To Be Tested
Examination of Product	3.4, 3.5, 3.6	4.8	5
Workmanship	3.13	4.8	5
Elastomer bond evaluation	3.9.1	4.7.2.1	5
Bond test to ultimate failure	3.9.2	4.7.2.2	5
Metallic Material Defects	3.9.3	4.7.2.3	5
Elastomer-to-Metal-Orientation	3.9.4	4.7.2.4	5
Spring rates	3.2.3.1	4.7.3	5
Static strength 1/	3.2.3.3	4.7.5	5

1/ Spring rate measurements or static strengths required and the directions shall be as specified on the applicable drawing.

Downloaded from http://www.everyspec.com

TABLE III. Quality conformance inspection.

Inspection	Requirement Paragraph	Test Method Paragraph	Inspection Level
Spring rates (see Note 2)	3.2.3.1	4.7.3	See Note 2
Dimensions	3.5.1	4.8	4.0 AQL
Identification of Product	3.6	4.8	1.0 AQL
Elastomer Bond Evaluation	3.9.1	4.7.2.1	100%
Bond Test to Ultimate Failure	3.9.2	4.7.2.2	1 pc/lot
Metallic Material Defects	3.9.3	4.7.2.3	100%
Elastomer-to-Metal Orientation (see Note 1)	3.9.4	4.7.2.4	See Note 1
Workmanship	3.13	4.8	1.0 AQL
Packaging	5.1		1.0 AQL

NOTES:

1. X-ray inspection not required unless otherwise specified by the applicable drawing. Inspection level desired shall be as specified in the procurement document.

2. Spring rate measurements required, the directions and inspection levels of each shall be specified on the applicable drawing.

TABLE IV. Failure criteria.

1. Cracking or failure of metal parts including shims.
2. Fretting of metal parts or shims due to loss of elastomer.
3. A 15 percent change in the initially measured production acceptance spring rate.
4. Cracks in the elastomer to a depth of more than 10 percent of the depth of the elastomer in the direction of crack propagation when measured with a 0.005-inch thick feeler gage.

Downloaded from http://www.everyspec.com

TABLE V. Test requirements for qualification approval.

Test Condition	1	2	3	4
Bearing Configuration	Type I Class C Figure 9	Type I Class C Figure 10	Type II Class E Figure 11	Type II Class E Figure 12
Spring rates (min)				
Axial (lb/in)	1,000,000	200,000		
Radial (lb/in)	580,000	50,000	380,000	140,000
Spring rates (max)				
Torsional (in-lb/deg)	800	12	45	6
Cocking (in-lb/deg)	1,170	20	30	4
Static strength (min)				
Axial load (lbs)	See 3.2.3.3.1	N/A	N/A	N/A
Radial load (lbs)	N/A	See 3.2.3.3.3	4,000	800
Droop stop test	See 3.2.3.3.2	N/A	N/A	N/A
Endurance test loads				
Axial load (lbs)	73,000	5,000		
Radial load (lbs)	±1,600	300 ± 200	±1,350	±250
Test speed (CPM)	300	1,500	300	1,500
Test motions				
Torsional (deg)	-5 ± 8	4 ± 2	±4	±4
Cocking (deg)	-4 ± 4	4 ± 2	±2.8	±2
Start-stop cycles				
Axial load (lbs)	80,000	5,800	N/A	N/A
Control check cycles				
Torsional (deg)	N/A	N/A	±26.0	±26.0
Cocking (deg)	N/A	N/A	±16.0	±16.0
Phase relationship	Note 1, 2	Note 1, 2	Note 3	Note 3

NOTES:

1. Torsional and cocking motion is 90 degrees out of phase.
2. Radial load and cocking motion are in phase.
3. Radial load and torsional motion are in phase; cocking motion is 90 degrees out of phase.

Downloaded from http://www.everyspec.com

TABLE VI. Static strength tests.

Description	Class	Applicable Test Paragraphs Static Strength Tests	
		Axial	Radial
Radial journal	A		4.7.5.2
Conical	B	4.7.5.1	
Spherical thrust	C	4.7.5.1	4.7.5.3
Thrust	D	4.7.5.1	
Spherical rod end	E		4.7.5.2
Spherical radial journal	AE		4.7.5.2
Spherical conical	BE	4.7.5.1	4.7.5.3

Downloaded from http://www.everyspec.com

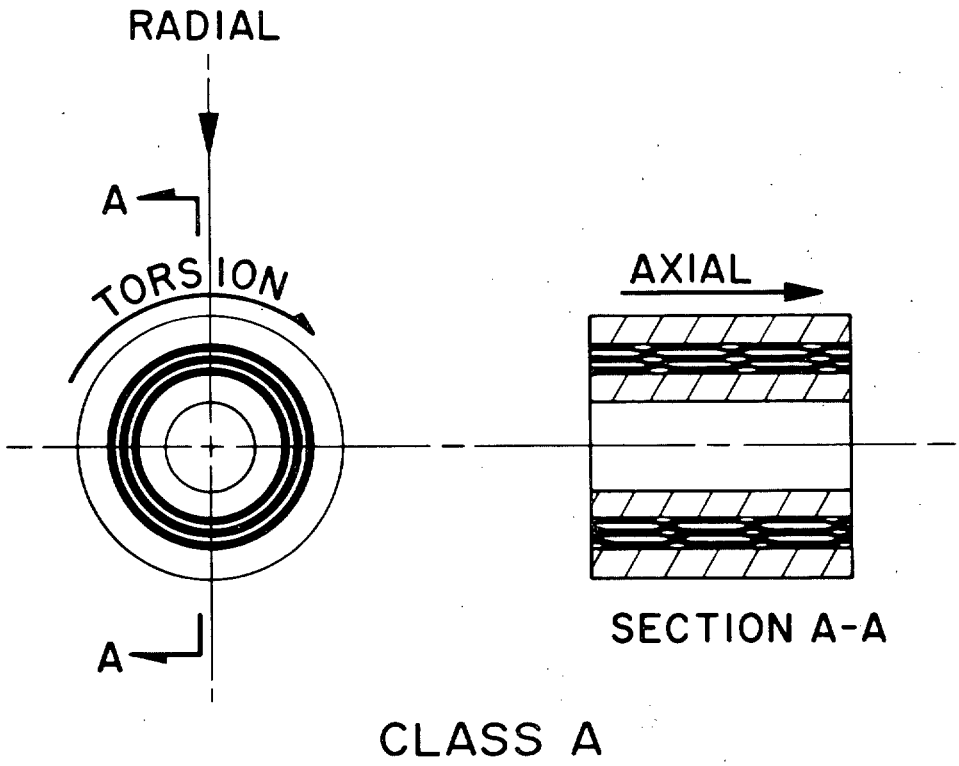

FIGURE 1. Radial journal bearing.

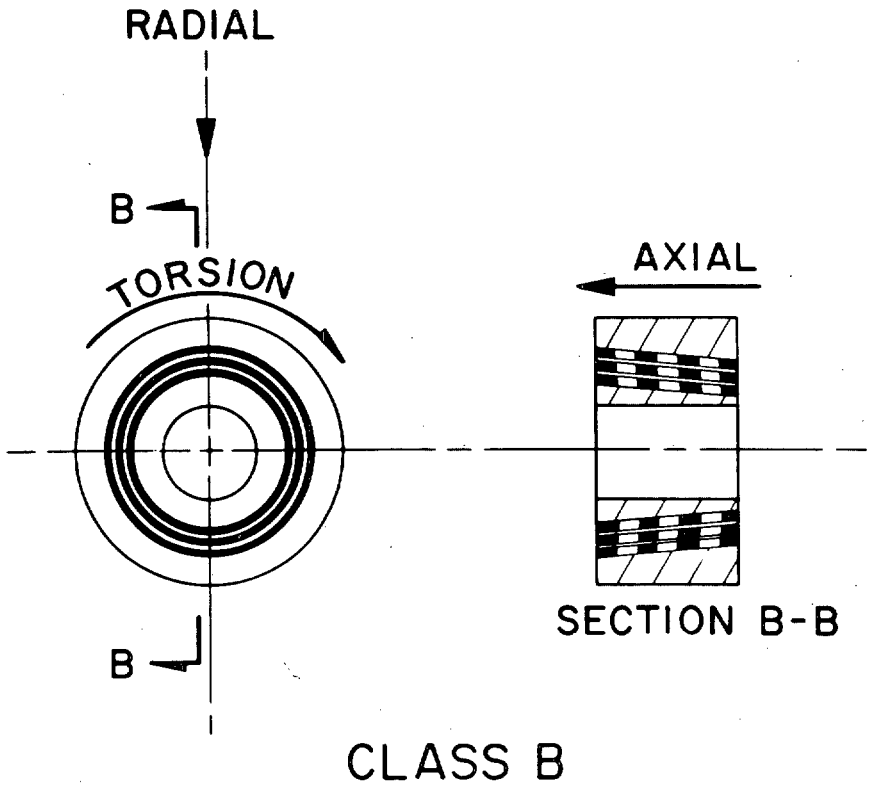

FIGURE 2. Conical bearing.

Downloaded from http://www.everyspec.com

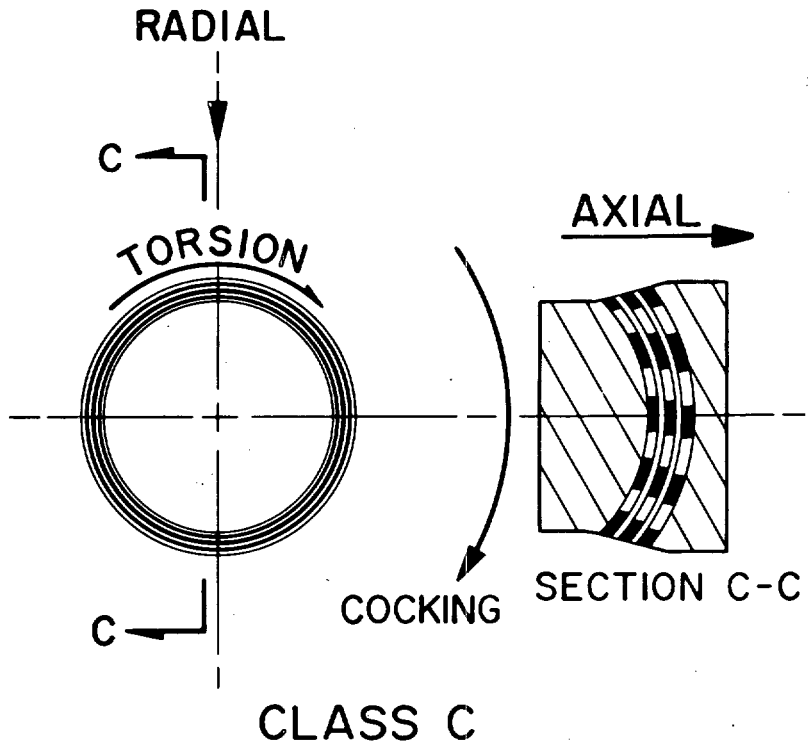

FIGURE 3. Spherical thrust bearing.

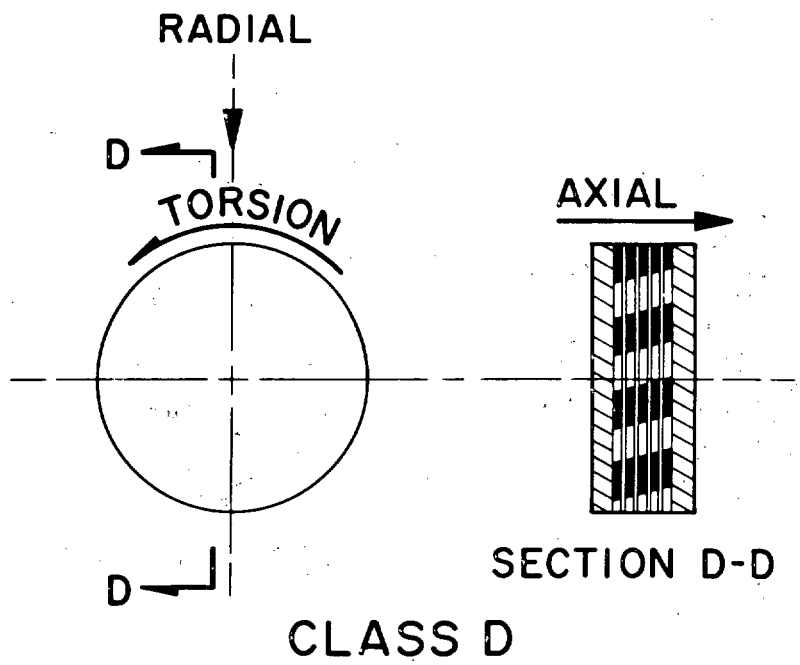

FIGURE 4. Thrust bearing.

Downloaded from http://www.everyspec.com

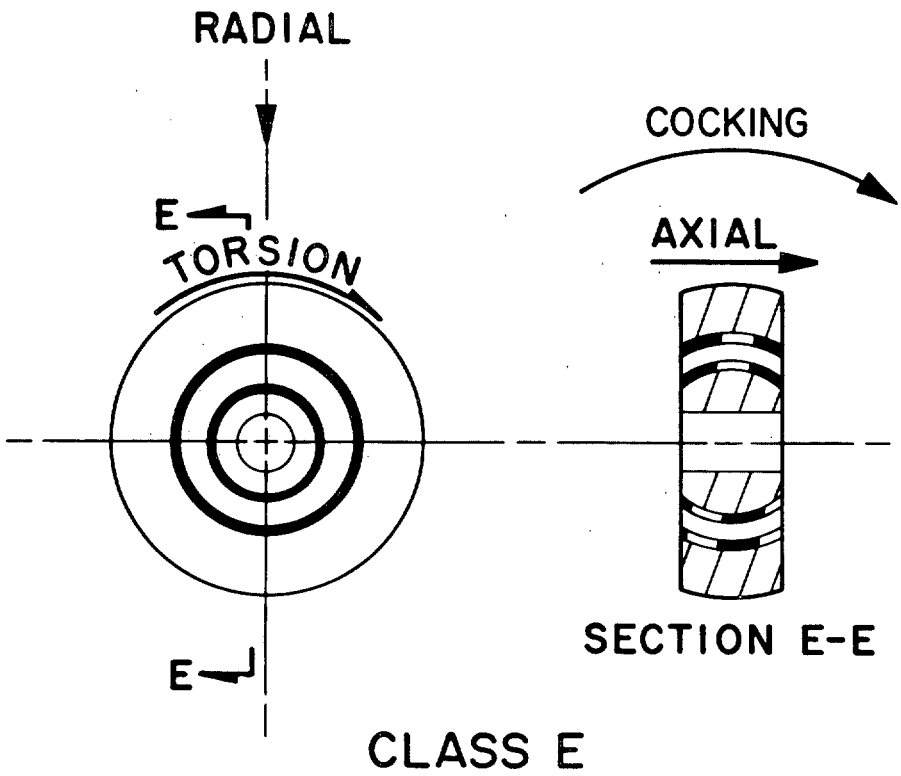

FIGURE 5. Spherical rod end bearing.

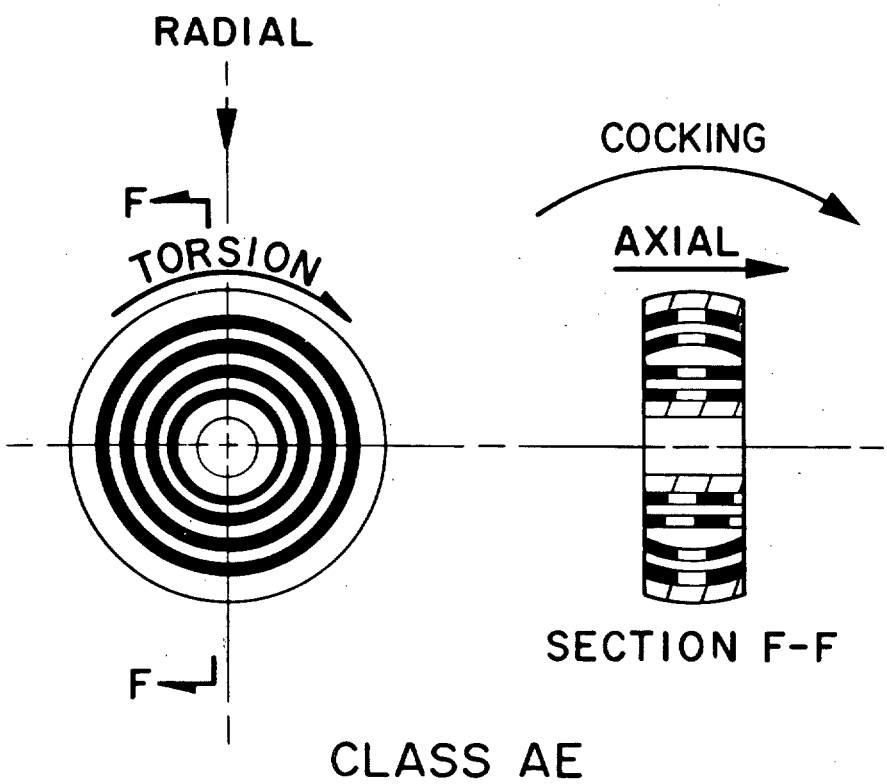

FIGURE 6. Spherical-radial journal bearing.

Downloaded from http://www.everyspec.com

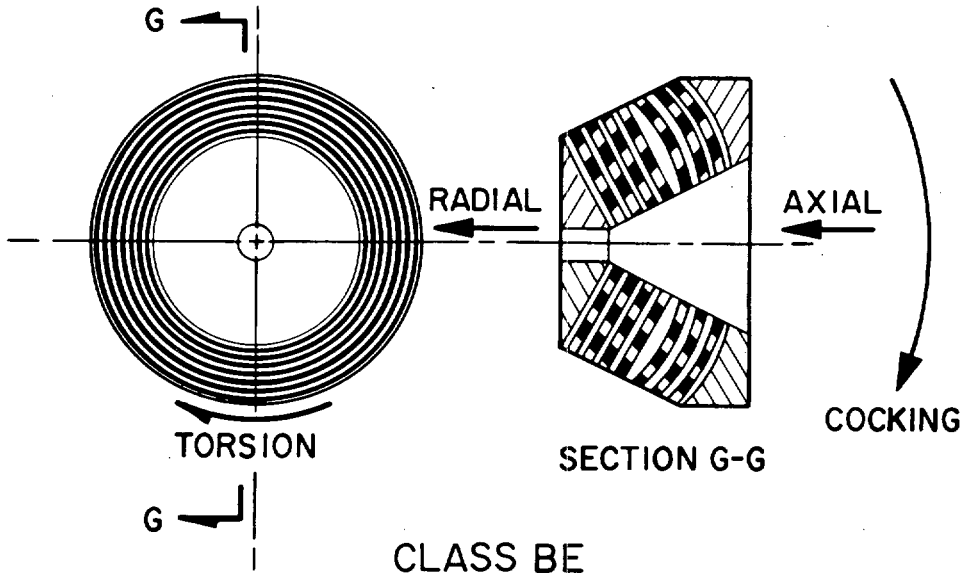

FIGURE 7. Spherical-conical bearing.

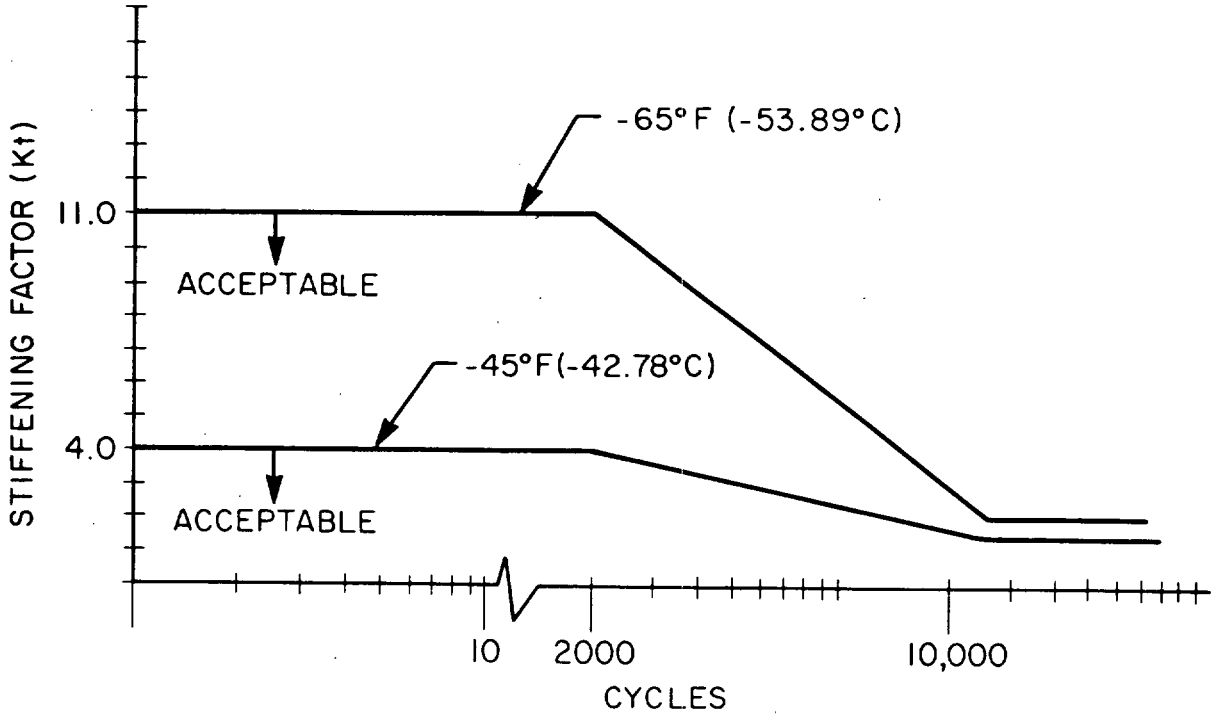

FIGURE 8. Low temperature stiffening factor characteristics.

Downloaded from http://www.everyspec.com

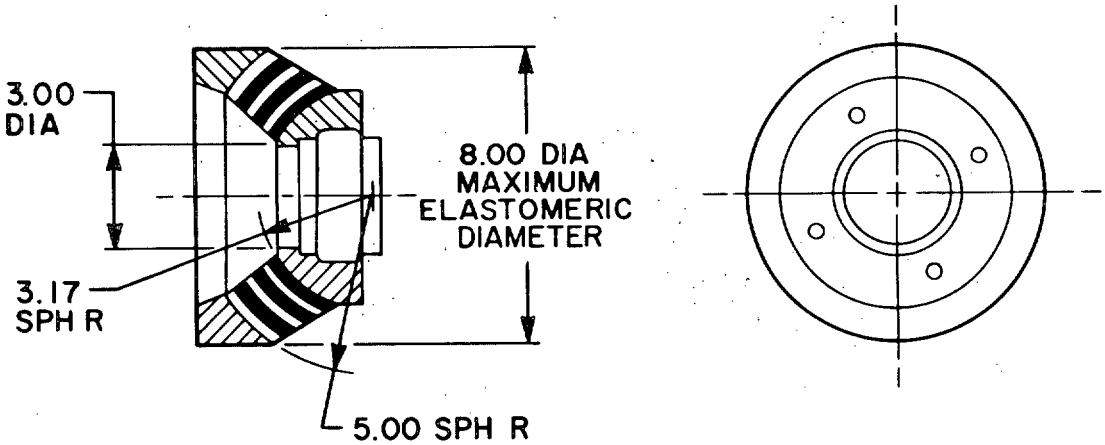

FIGURE 9. 300 CPM type I standard blade retention bearing.

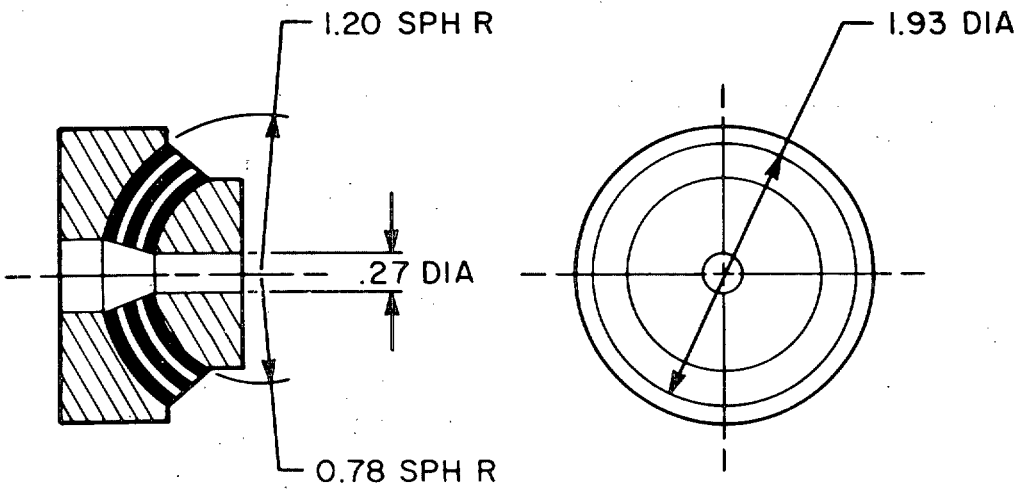

FIGURE 10. 1500 CPM type I standard blade retention bearing.

Downloaded from http://www.everyspec.com

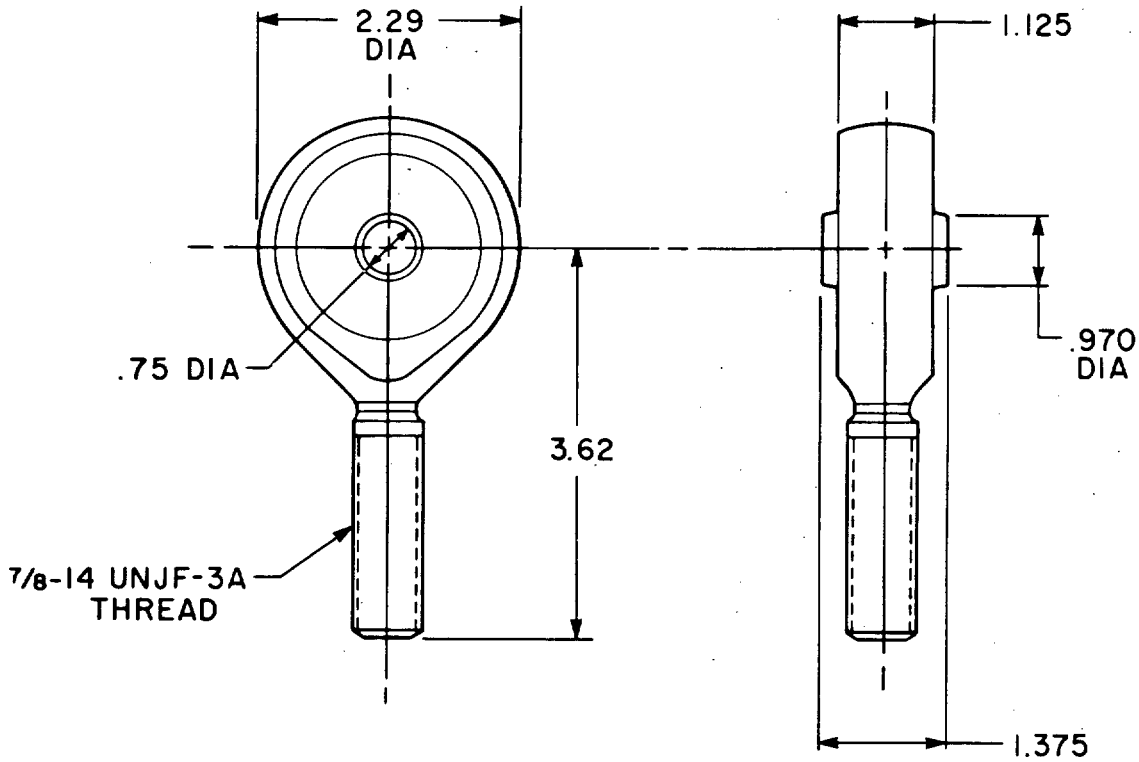

FIGURE 11. 300 CPM type II standard control system bearing.

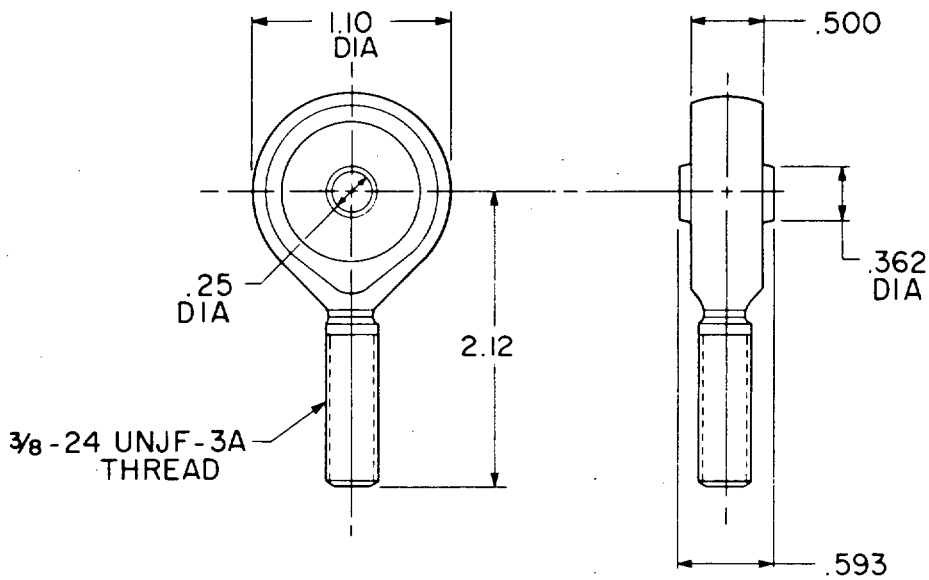

FIGURE 12. 1500 CPM type II standard control system bearing.

Downloaded from http://www.everyspec.com

STANDARDIZATION DOCUMENT IMPROVEMENT PROPOSAL

(See Instructions – Reverse Side)

1. DOCUMENT NUMBER	2. DOCUMENT TITLE

3a. NAME OF SUBMITTING ORGANIZATION	4. TYPE OF ORGANIZATION *(Mark one)*
	☐ VENDOR
	☐ USER
b. ADDRESS *(Street, City, State, ZIP Code)*	☐ MANUFACTURER
	☐ OTHER *(Specify)*: _____

5. PROBLEM AREAS

a. Paragraph Number and Wording:

b. Recommended Wording:

c. Reason/Rationale for Recommendation:

6. REMARKS

7a. NAME OF SUBMITTER *(Last, First, MI)* – Optional	b. WORK TELEPHONE NUMBER *(Include Area Code)* – Optional
c. MAILING ADDRESS *(Street, City, State, ZIP Code)* – Optional	8. DATE OF SUBMISSION *(YYMMDD)*

DD FORM 82 MAR 1426 PREVIOUS EDITION IS OBSOLETE.