Downloaded from http://www.everyspec.com

MILITARY SPECIFICATION

BEARINGS, PLAIN, SELF-ALIGNING, (BeCu Ball, CRES Race)

This specification is approved for use by all Departments and Agencies of the Department of Defense.

1. SCOPE

1.1 This specification covers airframe plain spherical bearings utilizing a beryllium-copper ball and corrosion resistant steel outer race for use between -65°F and +350°F.

2. APPLICABLE DOCUMENTS

2.1 The following documents, of the issue in effect on date of invitation for bids or request for proposal, form a part of this specification to the extent specified herein:

SPECIFICATIONS

Military

MIL-B-197	Bearing, Anti-friction, Associated Parts, and Subassemblies, Packaging of
MIL-D-1000	Drawings, Engineering and Associated Lists
MIL-G-81322	Grease, Aircraft, General Purpose, Wide Temperature Range
MIL-B-81936/1	Bearing, Plain, Self-Aligning, BeCu Ball CRES Race (With Staking Groove) -65°F to +350°F
MIL-B-81936/2	Bearing, Plain, Self-Aligning, BeCu Ball, CRES Race, -65°F to +350°F

FSC 3120

Downloaded from http://www.everyspec.com

STANDARDS

Federal

FED. TEST METHOD STD. NO. 151	Metals; Test Methods

Military

MIL-STD-105	Sampling Procedures and Tables for Inspection by Attributes
MIL-STD-129	Marking for Shipment and Storage
MIL-STD-130	Identification Marking of U. S. Military Property

(Copies of specifications, standards, drawings, and publications required by suppliers in connection with specific procurement functions should be obtained from the procuring activity or as directed by the contracting officer.)

2.2 Other publications - The following document forms a part of this specification to the extent specified herein. Unless otherwise indicated, the issue in effect on date of invitation for bids or request for proposal shall apply.

American National Standards Institute

ANSI B46.1	Surface Texture (Surface Roughness, Waviness, and Lay)

(Application for copies should be addressed to the American National Standards Institute, 1430 Broadway, New York, N. Y. 10018.)

Uniform Classification Committee

Uniform Freight Classification Rules

(Application for copies should be addressed to the Uniform Classification Committee, 202 Chicago Union Station, Chicago, Ill. 60606.)

3. REQUIREMENTS

3.1 Qualification - The bearings furnished under this specification shall be products which are qualified for listing on the applicable

Downloaded from http://www.everyspec.com

Qualified Products List at the time set for opening of bids (see 4.3 and 6.2).

3.1.1 Product design change - Any change in product design or description may require requalification of the product to an extent determined by the activity responsible for qualification.

3.2 Materials - The ball and outer race shall be in accordance with MIL-B-81936/1 or MIL-B-81936/2.

3.3 Design - Bearing design shall conform to that specified on MIL-B-81936/1 or MIL-B-81936/2.

3.4 Construction - Except as otherwise specified, the details of the working parts shall be optional. The bearings shall not have loading slots.

3.4.1 Dimensions and tolerances - Dimensions and tolerances shall be as specified on the applicable military specification sheet. Dimensions not shown shall be at the option of the manufacturer.

3.4.2 Surface texture - Surface textures shall have a roughness height rating (RHR) in accordance with ANSI B46.1 and as shown on the applicable military specification sheet.

3.4.3 Lubrication - The bearings shall be thoroughly cleaned and dried in accordance with MIL-B-197. The mating spherical surfaces lubricant groove and bore shall be coated with grease conforming to MIL-G-81322. The date of lubrication, month and year, shall be marked on each bearing package.

3.4.4 Hardness - The hardness shall be as specified on the applicable military specification sheet.

3.5 Performance -

3.5.1 Radial static load - After the radial static load listed on the applicable military specification sheet has been applied as specified in 4.6.1, the permanent set shall not exceed 0.0020 inch for sizes -4 through -12 and 0.0030 inch for sizes -13 through -24.

3.5.2 Axial static load - After the axial static limit load specified on the applicable military specification sheet has been applied as specified in 4.6.2, the permanent set shall not exceed 0.0040 inch.

Downloaded from http://www.everyspec.com

3.5.3 Ultimate load - No fracture of the ball or race or push-out of the ball shall occur when 1-1/2 times the radial or axial load specified on the applicable military specification sheet is applied, as specified in 4.6.1 and 4.6.2.

3.5.4 Dynamic tests -

3.5.4.1 Mode I dynamic test - After completion of the mode I dynamic test, as specified in 4.6.3.1, the maximum wear shall not exceed the values shown in table I. The bearing shall not crack, gall or otherwise fail.

3.5.4.2 Mode II dynamic test - After completion of the mode II dynamic test, as specified in 4.6.3.2, the maximum wear shall not exceed the values shown in table I. The bearing shall not crack, gall or otherwise fail.

3.5.5 Self-alignment - The bearing shall be self-aligning and shall permit the angular displacement specified on the applicable military specification sheet.

3.5.6 Internal play -

3.5.6.1 Radial play - When tested in accordance with 4.6.4.1 the radial play shall not exceed 0.0010 inch.

3.5.6.2 Axial play - When tested in accordance with 4.6.4.2 the axial play shall not exceed 0.0050 inch.

TABLE I. Maximum Allowable Wear

DASH NO.	MODE I	MODE II
-6	0.0010	0.0007
-12	0.0020	0.0012
-20	0.0032	0.0020

3.6 Interchangeability - All parts having the same manufacturer's part number shall be directly and completely interchangeable with each other with respect to installation and performance. The drawing number requirements of MIL-D-1000 shall govern changes in the manufacturer's part numbers.

3.7 Identification of product - Each bearing shall be permanently and legibly marked in accordance with MIL-STD-130 with the military specification part number and manufacturer's part number, name, or trademark. Identification shall appear on the periphery of the bearing outer race. Metal impression stamping is prohibited.

Downloaded from http://www.everyspec.com

3.8 Workmanship - The bearings shall be free of tool marks, chatter waves, griding scratches, pits, cracks, burrs, rough or sharp edges or other defects, and shall not catch or bind when manually oscillated or misaligned.

4. QUALITY ASSURANCE PROVISIONS

4.1 Responsibility for inspection - Unless otherwise specified in the contract or purchase order, the supplier is responsible for the performance of all inspection requirements as specified herein. Except as otherwise specified in the contract or order, the supplier may use his own or any other facilities suitable for the performance of the inspection requirements specified herein, unless disapproved by the Government. The Government reserves the right to perform any of the inspections set forth in the specification where such inspections are deemed necessary to assure supplies and services conform to prescribed requirements.

4.2 Classification of inspections - The examination and testing of the bearings shall be classified as:

(a) Qualification inspection (4.3)
(b) Quality conformance inspection (4.4)

4.3 Qualification inspection - Qualification inspection shall include all of the tests specified in table II.

TABLE II. Qualification Tests.

Examinations and Tests	Paragraph No.	Samples to be Tested (1)
Examination of Product	4.5.1	5
Radial Static Limit Load	4.6.1	3
Axial Static Limit Load	4.6.2	3
Mode I Dynamic Test	4.6.3.1	3
Mode II Dynamic Test	4.6.3.2	3 (2)

(1) Sizes M81936/1-6, -12 and -20 only.
(2) At manufacturer's option, the MODE II tests may be performed with M81936/1-6R, -12R and -20R bearings.

4.3.1 Sampling instructions - Qualification test samples shall consist of fifteen (15) bearings each of M81936/1-6, /1-12 and /1-20. In the event

Downloaded from http://www.everyspec.com

qualification is desired for only a part of the full series of bearings, the manufacturer may request authorization to substitute three other bearing sizes for qualification testing. The three substitute sizes shall be selected by the activity responsible for qualification.

All bearings necessary for test specified herein shall be furnished by the manufacturer and shall be representative of his normal production. Samples shall be identified as required and forwarded to the activity designated in the letter of authorization from the activity responsible for qualification (see 6.3).

4.3.2 Qualification approval - Qualification approval of the three sizes authorized will secure qualification approval of the remaining sizes for which qualification is desired. Qualification approval of an M81936/1 bearing will secure qualification approval of the M81936/1R, M81936/2 and M81936/2R bearings of the same bore size.

4.3.3 Certified test report - The manufacturer shall furnish a certified test report showing that the manufacturer's product satisfactorily conforms to this specification. The test report shall include, as a minimum, actual results of the tests specified herein including copies of the load versus deflection curves from the radial and axial static limit load tests. When the report is submitted, it shall be accompanied by a dated drawing which completely describes the manufacturer's product by specifying all dimensions and tolerances, composition of the ball and outer race material, and heat treatment. The manufacturer's part number for each size shall be included on the drawing. A material certification shall be supplied in accordance with the requirements of 4.5.2.

4.3.4 Retention - The retention of qualification shall consist of periodic verification and shall be by certification unless otherwise specified by the activity responsible for the Qualified Products List and shall be at intervals of not more than two years.

4.4 Quality conformance inspections - The quality conformance inspection of the bearings shall consist of the following examinations and tests to determine conformance of the bearings to this specification with regard to:

(a)	Dimensions	(3.4.1, 4.5.1)
(b)	Identification of product	(3.7, 4.5.1)
(c)	Workmanship	(3.8, 4.5.1)
(d)	Preparation for delivery	(4.5.3)
(e)	Internal play	(3.5.6, 4.6.4)
(f)	Hardness	(3.4.4, 4.6.5)

4.4.1 Lot - The lot definition, formation, and size shall be in accordance with MIL-STD-105.

Downloaded from http://www.everyspec.com

4.4.2 Sampling - The sample bearings shall be selected in accordance with MIL-STD-105, inspection level II, Acceptable Quality Level of 1.0 percent.

4.5 Examinations -

4.5.1 Examination of product - The bearings shall be examined to determine conformance to this specification for material (3.2), dimensions (3.4.1), surface texture (3.4.2), identification of product (3.7), workmanship (3.8), and requirements not covered by tests.

4.5.2 Material certification - The manufacturer shall furnish to the qualifying activity a material certification specifying the composition of the material used in the manufacture of the bearings.

4.5.3 Inspection of preparation for delivery - Preservation, packaging, packing, and marking shall be inspected to determine conformance to section 5.

4.6 Test methods - Unless otherwise specified, all tests shall be performed at room temperature.

4.6.1 Radial static load - The bearings shall be installed in a test fixture as shown on Figure 1, using an 0.000 to 0.001-inch loose fit for the shaft and the housing. The use of differential temperatures for installation will not be allowed. A preload of 4 to 6 percent of the radial static limit load shall be applied to the bearing for 15 seconds and the measuring device set at zero. The load shall then be increased at a rate not to exceed 2 percent of the specified load per second until it equals the radial static limit load. The load shall then be reduced at the same rate to the preload value. The permanent set shall be the reading at preload. The ultimate radial load (see 3.5.3) shall be applied at a rate not to exceed 2 percent of the specified load per second.

4.6.2 Axial static load - The test bearing shall be installed in a test fixture as shown on Figure 2. Bearings shall fit on the housing with an 0.000 to 0.001-inch loose fit. The hole in the support fixture for clearance of the ball shall be the nominal diameter of the ball plus 0.020. The bearing shall be preloaded between 4 to 6 percent of the axial static limit load. After holding for 15 seconds, the measuring device shall be set at zero. The load shall be increased at a rate not to exceed 2 percent of the specified load per second until it equals the axial static limit load. It shall be held for 1 minute, then reduced at the same rate to the preload value. The permanent set shall be the reading at preload. The ultimate axial load (see 3.5.3) shall be applied at a rate not to exceed 2 percent of the specified load per second.

Downloaded from http://www.everyspec.com

4.6.3 Dynamic tests -

4.6.3.1 Mode I dynamic test - The bearing shall be installed in a test fixture so that the ball is free to rotate on the outer race and the bore. The peak radial load (Mode I) specified in MIL-B-81936/1 shall be applied and reversed during each cycle while the bearing is oscillated through ±10° for 65,000 cycles. The load versus oscillation plot is shown in Figure 3. The bearing shall be relubricated with MIL-G-81322 grease every 2430 cycles. A dial indicator or electronic pickup device shall be so mounted as to facilitate measurement of radial wear along the axis of load application. Wear shall be measured in the test fixture with full test load applied. Test bearing must be allowed to cool to ambient temp prior to final wear measurement.

4.6.3.2 Mode II dynamic test - The bearing shall be installed in a test fixture so that the ball is free to rotate on the outer race only. The peak radial load (Mode II) specified in MIL-B-81936/1 shall be applied and reversed during each cycle while the bearing is oscillated through ±10° for 20,000 cycles. The load versus oscillation plot is shown in Figure 3. The bearing shall be relubricated with MIL-B-81322 grease every 750 cycles. A dial indicator or electronic pickup device shall be so mounted as to facilitate measurement of radial wear along the axis of load application. Wear shall be measured in the test fixture with full test load applied. Test bearing must be allowed to cool to ambient temperature prior to final wear measurement.

4.6.4 Internal play -

4.6.4.1 Radial play - Radial play shall be measured with a 5-1/2-pound measuring load applied to one member (inner or outer) perpendicular to the bore axis successively in opposite directions. The other member shall be rigidly clamped. Radial play shall be the full dial movement less shaft clearance.

4.6.4.2 Axial play - Axial play shall be measured with a 5-1/2-pound measuring load applied to the inner member parallel to the bore axis successively in opposite directions. The outer member shall be rigidly clamped. The axial play is equal to the full dial movement.

4.6.5 Hardness - Hardness tests shall be performed as specified in new Federal Test Method Standard No. 151.

Downloaded from http://www.everyspec.com

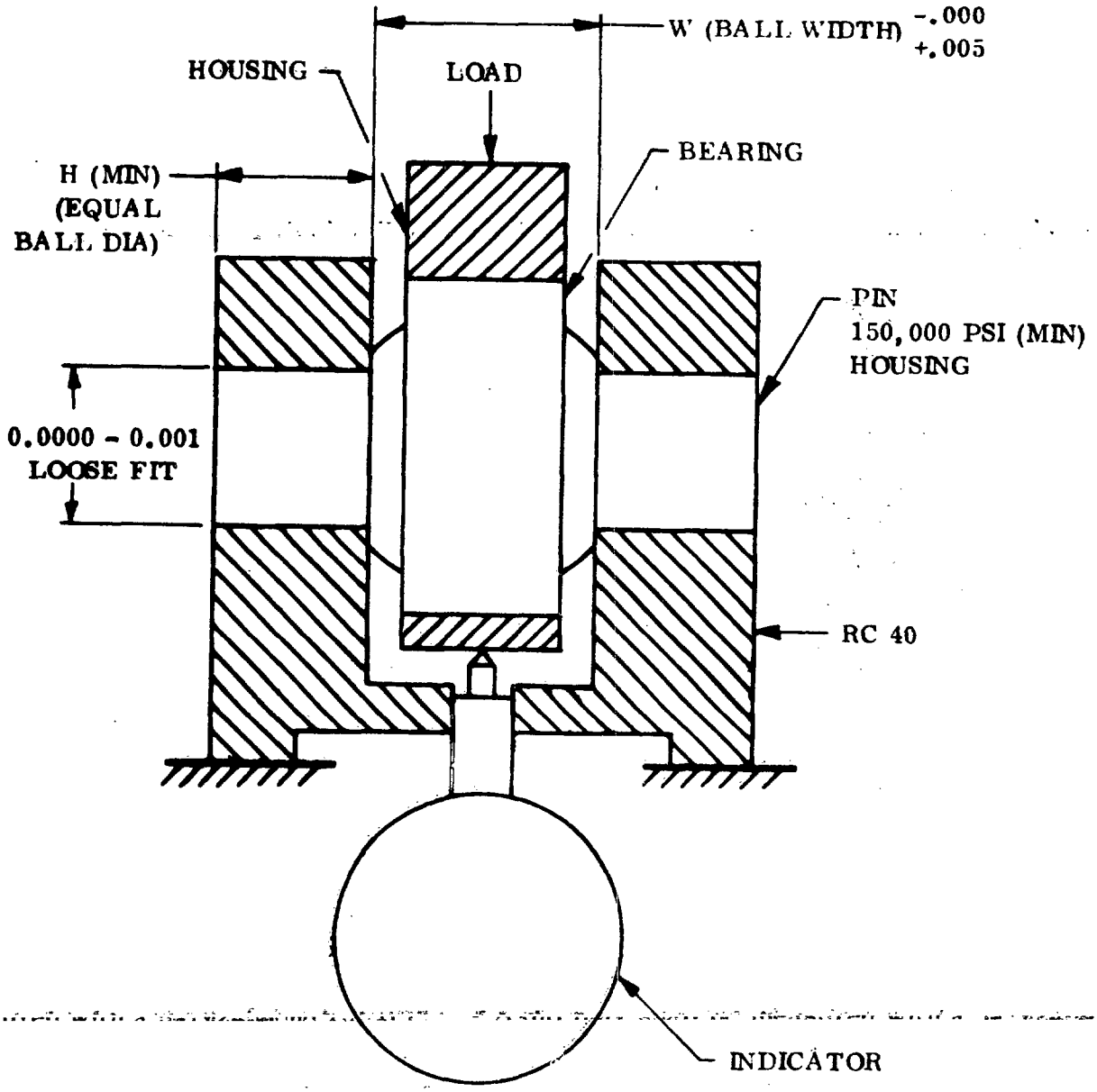

PIN SHALL BE RC 50 MINIMUM
DIMENSIONS IN INCHES

FIGURE 1. Radial Test Fixture

Downloaded from http://www.everyspec.com

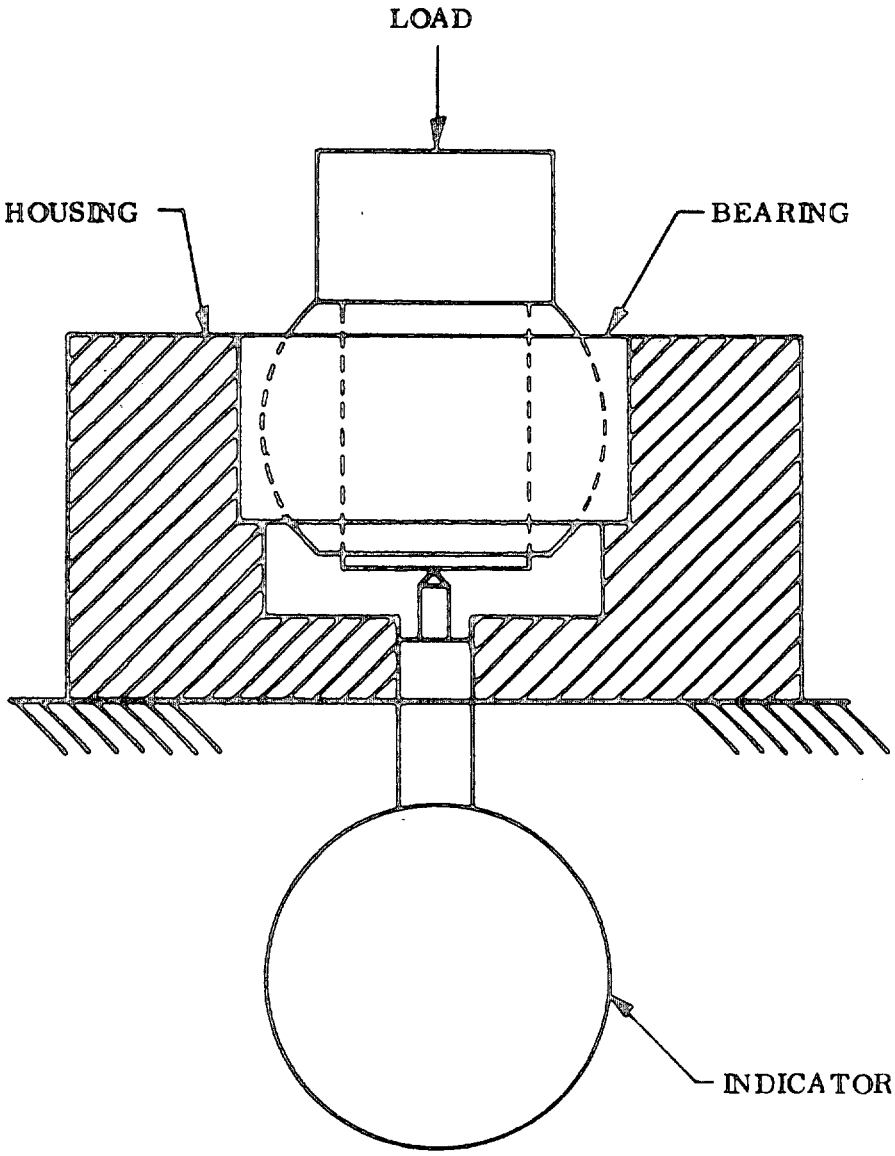

FIGURE 2. Axial Test Fixture

Downloaded from http://www.everyspec.com

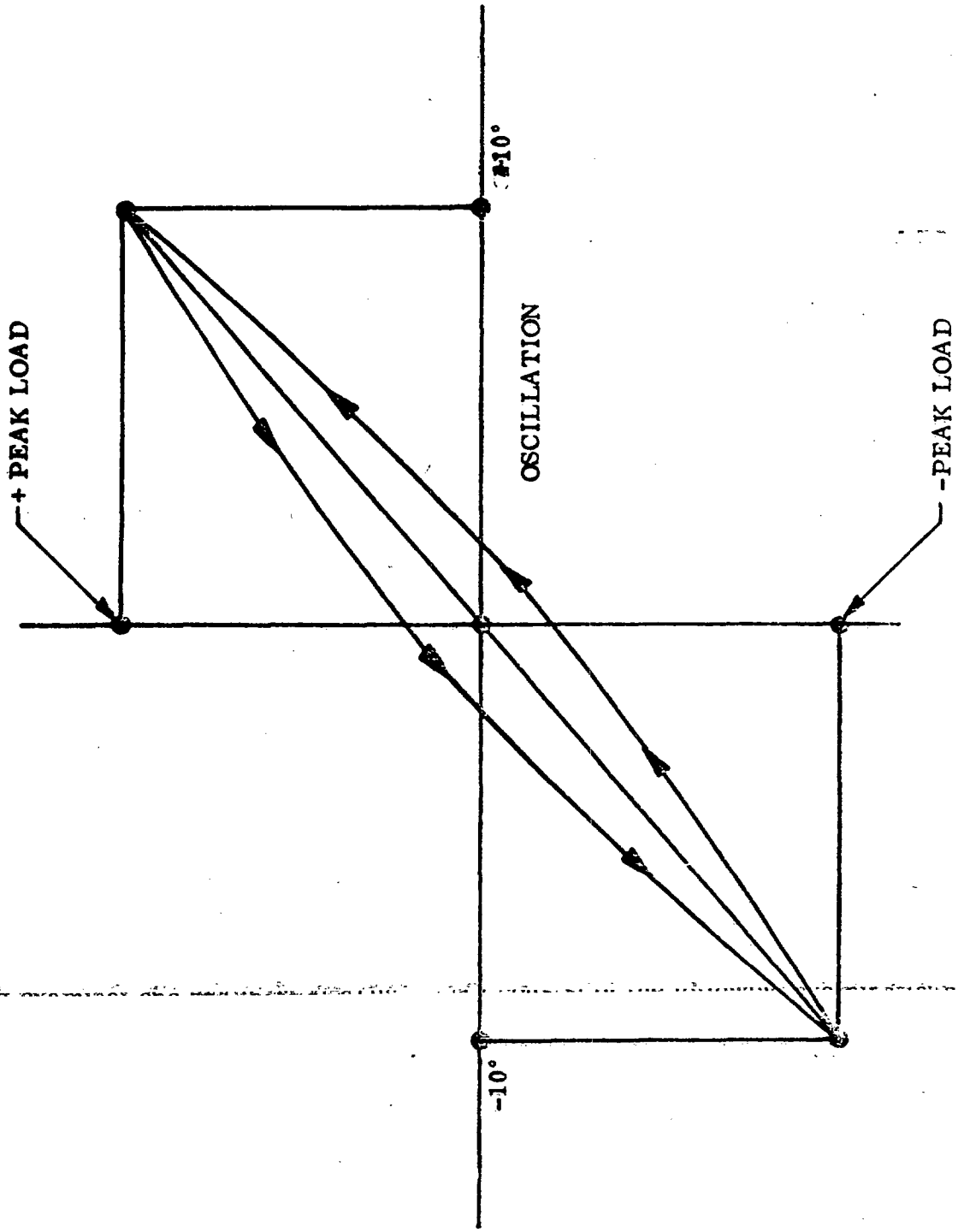

FIGURE 3. Load Versus Oscillation

Downloaded from http://www.everyspec.com

5. PREPARATION FOR DELIVERY

5.1 Preservation, packaging, packing, and marking - Preservation, packaging, packing, and marking shall be in accordance with MIL-B-197. Unit packages shall contain one unit per package. Each unit package shall include the date of lubrication (month and year).

5.2 Marking for shipment and storage - The shipment marking nomenclature shall include the following:

Bearings, Plain, Self-Aligning, BeCu Ball, CRES Race*
Airframe, Antifriction, Type (I, II, III, IV).*

*With staking groove where applicable.

6. NOTES

6.1 Intended use - These bearings are intended for use in airframe power-actuated systems developing high oscillatory loads where moderate friction is not objectionable and where relubrication provisions are available.

6.2 Ordering data - Procurement documents should specify:

(a) Title, number, and date of this specification.
(b) Military part number (see 3.3).

6.3 Qualification - With respect to products requiring qualification, awards will be made only for products which are at the time set for opening of bids, qualified for inclusion in the applicable Qualified Products List, whether or not such products have actually been so listed by that date. The attention of the suppliers is called to this requirement, and manufacturers are urged to arrange to have the products that they propose to offer to the Federal Government tested for qualification in order that they may be eligible to be awarded contracts or orders for the products covered by this specification. The activity responsible for the Qualified Products List is the Naval Air Systems Command, Navy Department, Washington, D. C. 20360; however, information pertaining to qualification of products may be obtained from the Naval Air Development Center, Code 30211, Warminster, Pennsylvania 18974. (Telephone (215) 672-9000, extension 2834 AUTOVON 441-2834.)

6.3.1 Qualification tests will be authorized only upon presentation of certified test reports and drawings indicating that the bearings conform to this specification.

Downloaded from http://www.everyspec.com

Preparing activity:
Navy - AS

(Project No. 3120-0427)

Custodians:
Navy - AS
Air Force - 11
Army - AV

Reviewer activities:
Navy -
Air Force - 84
Army -

Downloaded from http://www.everyspec.com

STANDARDIZATION DOCUMENT IMPROVEMENT PROPOSAL

OMB Approval No. 22-R255

INSTRUCTIONS: The purpose of this form is to solicit beneficial comments which will help achieve procurement of suitable products at reasonable cost and minimum delay, or will otherwise enhance use of the document. DoD contractors, government activities, or manufacturers/vendors who are prospective suppliers of the product are invited to submit comments to the government. Fold on lines on reverse side, staple in corner, and send to preparing activity. Comments submitted on this form do not constitute or imply authorization to waive any portion of the referenced document(s) or to amend contractual requirements. Attach any pertinent data which may be of use in improving this document. If there are additional papers, attach to form and place both in an envelope addressed to preparing activity.

DOCUMENT IDENTIFIER AND TITLE MIL-B-81936 BEARINGS, PLAIN, SELF- ALIGNING, (BECu Ball, CRES Race)

NAME OF ORGANIZATION AND ADDRESS

CONTRACT NUMBER

MATERIAL PROCURED UNDER A

☐ DIRECT GOVERNMENT CONTRACT ☐ SUBCONTRACT

1. HAS ANY PART OF THE DOCUMENT CREATED PROBLEMS OR REQUIRED INTERPRETATION IN PROCUREMENT USE?

A. GIVE PARAGRAPH NUMBER AND WORDING.

B. RECOMMENDATIONS FOR CORRECTING THE DEFICIENCIES

2. COMMENTS ON ANY DOCUMENT REQUIREMENT CONSIDERED TOO RIGID

3. IS THE DOCUMENT RESTRICTIVE?

☐ YES ☐ NO (If "Yes", in what way?)

4. REMARKS

SUBMITTED BY (Printed or typed name and address - Optional)

TELEPHONE NO.

DATE

DD FORM 1 JAN 72 1426

REPLACES EDITION OF 1 JAN 66 WHICH MAY BE USED

Downloaded from http://www.everyspec.com

FOLD

DEPARTMENT OF THE NAVY
Naval Air Engineering Center
Philadelphia, PA 19112

OFFICIAL BUSINESS

POSTAGE AND FEES PAID
DEPARTMENT OF THE NAVY
DOD 316

U.S. MAIL

Engineering Specifications and Standards Department (Code ES)
Naval Air Engineering Center
Philadelphia, PA 19112

FOLD