Downloaded from http://www.everyspec.com

MIL-B-81820E
21 July 1986
SUPERSEDING
MIL-B-81820D
30 July 1979

MILITARY SPECIFICATION

BEARINGS, PLAIN, SELF-ALIGNING, SELF-LUBRICATING, LOW SPEED OSCILLATION, GENERAL SPECIFICATION FOR

This specification is approved for use by all Departments and Agencies of the Department of Defense.

1. SCOPE

1.1 Scope. This specification covers plain spherical bearings which are self-aligning and self-lubricating by incorporating polytetrafluoroethylene (PTFE) in a liner between the ball and race (outer ring). PTFE may be incorporated in a fabric or composite material bonded to the ID of the outer ring, or in a composite material molded into a pre-formed cavity between the inner and outer ring. These bearings are for use in the temperature range -65°F to +325°F.

2. APPLICABLE DOCUMENTS

2.1 Government documents.

2.1.1 Specifications, standards and handbooks. The following specifications, standards and handbooks form a part of this specification to the extent specified herein. Unless otherwise specified, the issues of these documents shall be those listed in the issue of the Department of Defense Index of Specifications and Standards (DODISS) and supplement thereto, cited in the solicitation.

SPECIFICATIONS

FEDERAL

QQ-C-320	Chromium Plating (Electrodeposited)
QQ-P-35	Passivation Treatments for Corrosion Resisting Steel
QQ-P-416	Plating, Cadmium (Electrodeposited)
TT-S-735	Standard Test Fluids; Hydrocarbon

Beneficial comments (recommendations, additions, deletions) and any pertinent data which may be of use in improving this document should be addressed to: Naval Air Engineering Center, Systems Engineering and Standardization Department (Code 9311), Lakehurst, NJ 08733-5100 by using the self-addressed Standardization Document Improvement Proposal (DD Form 1426) appearing at the end of this document or by letter.

AMSC N/A FSC 3120

DISTRIBUTION STATEMENT A: Approved for public release; distribution is unlimited.

Downloaded from http://www.everyspec.com

MILITARY

MIL-P-116	Preservation, Methods of
MIL-B-197	Bearings, Anti-Friction, Associated Parts and Sub-Assemblies, Packaging of
MIL-H-5606	Hydraulic Fluid, Petroleum Base, Aircraft, Missile, and Ordnance
MIL-T-5624	Turbine Fuel, Aviation, Grades JP-4 and JP-5
MIL-L-7808	Lubricating Oil, Aircraft Turbine Engine, Synthetic Base, NATO Code Number O-148
MIL-A-8243	Anti-Icing and Deicing-Defrosting Fluid
MIL-B-8942	Bearings, Plain, TFE Lined, Self-Aligning
MIL-H-83282	Hydraulic Fluid, Fire Resistant, Synthetic Hydrocarbon Base, Aircraft, NATO Code Number H-537

STANDARDS

MILITARY

MIL-STD-105	Sampling Procedures and Tables for Inspection by Attributes
MIL-STD-129	Marking for Shipment and Storage
MS14101	Bearing, Plain, Self-Lubricating, Self-Aligning, Low Speed, Narrow, Grooved Outer Ring, -65° to 325°F
MS14102	Bearing, Plain, Self-Lubricating, Self-Aligning, Low Speed, Wide, Chamfered Outer Ring, -65° to 325°F
MS14103	Bearing, Plain, Self-Lubricating, Self-Aligning, Low Speed, Wide, Grooved Outer Ring, -65° to 325°F
MS14104	Bearing, Plain, Self-Lubricating, Self-Aligning, Low Speed, Narrow, Chamfered Outer Ring, -65° to 325°F

(Copies of specifications, standards, handbooks, drawings, publications and other Government documents required by contractors in connection with specific acquisition functions should be obtained from the contracting activity or as directed by the contracting activity.)

Downloaded from http://www.everyspec.com

2.2 Other publications. The following document(s) form a part of this specification to the extent specified herein. Unless otherwise specified, the issues of the documents which are DOD adopted shall be those listed in the issue of the DODISS specified in the solicitation. Unless otherwise specified, the issues of documents not listed in the DODISS shall be the issue of the nongovernment documents which is current on the date of the solicitation.

UNIFORM CLASSIFICATION COMMITTEE

Uniform Freight Classification Rules

(Application for copies of the above publication should be addressed to the Uniform Classification Committee, 202 Chicago Union Station, Chicago, IL 60606.)

AMERICAN NATIONAL STANDARDS INSTITUTE

ANSI B46.1	Surface Texture (Surface Roughness, Waviness, and Lay)

(Copies of the above publication may be obtained from the American National Standards Institute, 1430 Broadway, New York, NY 10018.)

AMERICAN SOCIETY FOR TESTING MATERIALS

F-25	Method for Sizing and Counting Airborne Particulate Contamination in Clean Rooms and Other Dust Controlled Areas Designed for Electronic and Similar Applications
F-50	Practice for Continuous Sizing and Counting of Airborne Particles in Dust Controlled Areas Using Instruments Based Upon Light Scattering Principles
C-794	Test Method for Adhesion-In-Peel of Elastomeric Joint Sealants

(Copies of the above publications may be obtained from the American Society for Testing Materials, 1916 Race Street, Philadelphia, PA 19103, telephone 215-299-5400.)

(Non-Government standards and other publications are normally available from the organizations which prepare or which distribute the documents. These documents also may be available in or through libraries or other informational services.)

2.3 Order of precedence. In the event of a conflict between the text of this specification and the references cited herein (except for associated detail specifications, specification sheets or MS standards), the text of this specification shall take precedence. Nothing in this specification, however, shall supersede applicable laws and regulations unless a specific exemption has been obtained.

Downloaded from http://www.everyspec.com

3. REQUIREMENTS

3.1 Qualification. Bearings furnished under this specification shall be products which are authorized by the qualifying activity for listing on the applicable Qualified Products List at the time set for opening of bids (see 4.3.4, 6.3 and 6.3.1).

3.1.1 Product change. Any change in product design, description, materials or bonding related operations will require requalification of the product to an extent determined by the qualifying activity.

3.1.2 Product manufacture. Except for the bonding and swaging operations the manufacturer is permitted to subcontract manufacturing operations without violating the requirements of 3.1.1. The bonding and swaging operations shall be performed in the plant listed on the Qualified Products List. Manufacture of the self-lubricating liner material may also be subcontracted. Any change in (1) the liner manufacturer, (2) the liner manufacturing procedures, or (3) the materials used in manufacture of the liner will require requalification to an extent determined by the qualifying activity.

3.2 Materials. The ball, outer ring and liner shall be in accordance with the applicable MS.

3.2.1 Plating. Plating of the ball will be permitted, at the option of the manufacturer, and shall be in accordance with QQ-C-320. Plating of the outer race shall be in accordance with QQ-P-416, Type II, Class 2, and the applicable MS drawing.

3.2.2 Passivation. PH13-8 Mo steel balls shall be passivated in accordance with QQ-P-35.

3.2.2.1 Passivation of 440C steel balls is optional.

3.3 Design. Bearing design shall conform to that shown on MS14101, MS14102, MS14103 or MS14104.

3.4 Construction. The liner shall be so secured that all relative motion will be between the unbonded surface of the liner and the ball. The bearing shall not have loading slots. Except as otherwise specified, the details of the working parts shall be optional.

3.4.1 Dimensions and tolerances. Dimensions and tolerances shall be specified on the applicable MS. Dimensions not shown shall be at the option of the manufacturer.

3.4.2 Surface texture. All specified surface textures shall be in accordance with ANSI B46.1. The sphered surface of the ball shall have a surface texture of RHR 8 maximum. The ball bore, ball faces and outer ring periphery shall have a surface texture of RHR 32 maximum. All other surfaces shall have a texture of RHR 125 maximum. The sphered surface of the ball shall be honed, polished or similarly finished subsequent to grinding.

Downloaded from http://www.everyspec.com

3.4.3 Lubrication. Initial grease or oil lubrication by the manufacturer will not be permitted.

3.4.4 Conformity. For bearings with fabric or fabric composite type liners the conformity of the ball and outer ring shall be measured normally. For bearings with molded liners, the conformity of the ball and outer ring shall be measured both normally and circumferentially.

3.4.4.1 Fabric liners. The normal conformity between the ball and outer ring shall be checked in accordance with 4.6.8.1. For fabric type liners measurements shall be taken at a minimum of five uniformly spaced positions across the bearing. Variation between measured values shall not exceed 0.003 inch. When overforming of the outer ring is observed per 4.6.8.1, then the measured values in the outer ten percent of the ring width shall not vary from the above measured maximum value by more than 0.005 inch. Underforming is not controlled.

3.4.4.2 Molded liners. Normal conformity of bearings with molded liners shall be measured in accordance with 4.6.8.1. The precise shape of the cavity containing the liner material is not defined. However, the cavity shall not exhibit sharp angular changes in curvature across the width of the bearing. Dimension "t" shall be measured initially at the midpoint and H/10 positions (see figure 3B). The allowable values at the H/10 positions for the military standards referenced in 3.3 shall be .011 ±.003 for all sizes. The permitted variation within any one bearing shall not exceed .004 inch. The maximum liner thickness shall occur at the midpoint and the allowable values of "t" at the midpoint shall be equal to, or greater than, the H/10 values but not greater than 0.022 inch. In addition to the three initial measurements, the outer ten percent of the ring width shall be checked for overforming and the measured values of "t" in these regions shall be not less than 0.008 inch.

3.4.4.3 Circumferential conformity. In molded liner bearings the circumferential conformity shall be measured in accordance with 4.6.8.2. Variation in measured values of " " shall not exceed 0.003 inch.

3.4.5 PTFE liner condition and bond integrity.

3.4.5.1 Visual examination. The visual appearance of the bonded liner shall exhibit a degree of workmanship consistent with proper manufacturing process controls, as checked per 4.6.9.1. The liner shall be uniform in texture and shall contain no imbedded contaminants. The liner set-back shall meet the applicable drawing requirements. There shall be no separation or lifting of the liner at any of the edges. There shall be no unraveling or excessive fraying of the liner at any of the edges. Molded liners shall completely fill the cavity between the ball and outer ring and shall not contain embedded contaminants, cracks or bubbles.

3.4.5.2 Bond integrity and peel strength. When tested in accordance with 4.6.9.2, the liner shall be tightly adherent to the metallic substrate over at least 90 percent of the contact area and shall exhibit an average peel strength of 2.0 pounds per inch or greater. The adhesive remaining on the metal substrate shall have no void or unbonded area which cannot be included within a circumscribing circle with a diameter equal to 25 percent of the ring width or 0.25 inch, whichever is smaller.

Downloaded from http://www.everyspec.com

3.4.5.2.1 Processing controls. All fabrication of the PTFE liner involving application or mixing of adhesive, and all liner bonding procedures involving application of adhesive, shall be conducted in a controlled area.

3.4.5.2.1.1 Controlled area. The controlled area shall be maintained at a temperature of 75° ±10°F with a maximum relative humidity of 75%. The enclosed atmosphere of the work area shall be well ventilated and maintained so that the particle count is 2500 maximum 5.0 microns or larger when measured per ASTM F-25 or ASTM F-50. The particle count measurement shall be performed annually (minimum). There shall be no eating or smoking in the controlled area and no process which produces uncontrolled spray, dust, fumes or particulate matter.

3.4.5.3 Liner peelability. Each manufacturer shall establish during qualification testing whether the liner is peelable or non-peelable. If peelable, the manufacturer shall determine the mean and standard deviation peel strength values for the liner based upon a minimum of six peel strength tests conducted in accordance with 4.6.9.2. This data shall be recorded in the qualification test report. A liner originally qualified as peelable shall remain peelable in production. A liner originally qualified as non-peelable shall remain non-peelable in production.

3.5 Performance.

3.5.1 Radial static limit load. After the radial load listed on the applicable MS has been applied as specified in 4.6.1, the total deflection of the bearing and fixture shall be less than 0.010 inch for bearings with a bore of 3/8 inch or less, 0.015 for 7/16 and 1/2 inch, 0.017 for 9/16 and 5/8 inch, 0.020 for 3/4 inch and up. In all instances the permanent set shall be less than 0.0030 inch.

3.5.2 Axial static limit load. After the axial load listed on the applicable MS has been applied as specified in 4.6.2, the permanent set shall be less than 0.005 inch.

3.5.3 Ultimate load. No fracture of the race or ball, or pushout of the ball shall occur when 1.5 times the radial or axial limit is applied, as specified in 4.6.1 or 4.6.2.

3.5.4 Oscillation under radial load. When tested in accordance with 4.6.3, the bearing shall not exhibit metal-to-metal contact between the ball and outer ring. The total liner wear of the bearing shall not exceed the values specified in Table I and the loaded rotational breakaway torque shall not exceed the value specified in Table VI. When inspected in accordance with 4.6.9.2, bond integrity shall be as specified in 3.4.5.

3.5.5 Self-alignment. The bearing shall be self-aligning and shall permit the angular displacement specified on the applicable MS.

Downloaded from http://www.everyspec.com

TABLE I. Maximum allowable wear after oscillation under radial load.

	Maximum Allowable Wear		
MS Number	1000 cycles	5000 cycles	25000 cycles
Narrow -4	.0029	.0033	.0037
-5 through -16	.0035	.0040	.0045
Wide -4	.0031	.0035	.0039
-5 through -16	.0035	.0040	.0045

3.5.6 No-load rotational breakaway torque. When tested in accordance with 4.6.4, no-load rotational breakaway torque shall be within the limits of the values specified on the applicable MS. The letter "K" after the dash number indicates a bearing supplied with low breakaway torque. See 3.5.10 and 3.5.11 for additional requirements for bearings which are identified as being supplied with low breakaway torque. The absence of the letter "K" indicates standard breakaway torque. Axial or radial play shall not be permitted in standard breakaway torque bearings.

3.5.7 Fluid contamination. When tested in accordance with 4.6.5, the liner wear shall not exceed 0.006 inch, and the bearing shall not exhibit metal-to-metal contact between the ball and the outer ring. No corrosion of the bearing shall result. (Superficial tarnish which can be removed with a damp cloth shall not be the cause for rejection.) When inspected in accordance with 4.6.9.2, bond integrity shall be as specified in 3.4.5.

3.5.8 High temperature. When tested in accordance with 4.6.6, the bearing shall be capable of operating at a temperature of 325°F. The liner wear shall not exceed 0.006 inch, and the bearing shall not exhibit metal-to-metal contact between the ball and the outer ring. When inspected in accordance with 4.6.9.2, the bond integrity shall be as specified in 3.4.5.

3.5.9 Sub-zero temperature. When tested in accordance with 4.6.7, the bearing shall be capable of operating at a temperature of -10°F. The liner wear shall not exceed 0.0080 inch, and the bearing shall not exhibit metal-to-metal contact between the ball and the outer ring. When inspected in accordance with 4.6.9.2, bond integrity shall be as specified in 3.4.5.

3.5.10 Radial play. Bearings which are provided with low breakaway torque shall be measured to determine internal radial play in accordance with 4.4.2.4 and 4.6.10. Radial play shall be not greater than 0.0007 inch for sizes -3K through -12K, nor greater than 0.0010 inch for sizes -14K and -16K. Identification of these parts shall be in accordance with the designation shown on the applicable military standard.

3.5.11 Axial play. Bearings which are provided without preload torque shall be measured to determine axial play in accordance with 4.6.11. Maximum allowable axial play values shall be as follows:

Downloaded from http://www.everyspec.com

MS	Size	Max Clearance
MS 14101 and MS14104	-3K thru -12K	.0028 inch
	-14K and -16K	.0040 inch
MS 14102 and MS 14103	-3K thru -12K	.0021 inch
	-14K and -16K	.0030 inch

Identification of these parts shall be in accordance with the designation shown on the applicable military standard.

3.6 Identification of product. Each bearing shall be permanently and legibly marked with the manufacturer's name or trademark, MS number and the manufacturer's part number. Where practicable, identification shall appear on the side face of the outer ring; otherwise identification shall appear on the periphery of the outer ring. Metal impression stamping is prohibited.

3.7 Workmanship.

3.7.1 General requirements. All workmanship shall be such as to result in a bearing which meets all the requirements of this specification. The bearing shall be free from defects (i.e., scratches, pits, burrs or other) which may affect its durability and serviceability.

4. QUALITY ASSURANCE PROVISIONS

4.1 Responsibility for inspection. Unless otherwise specified in the contract or purchase order, the contractor is responsible for the performance of all inspection requirements as specified herein. Except as otherwise specified in the contract or order, the contractor may use his own or any other facilities suitable for the performance of the inspection requirements specified herein, unless disapproved by the Government. The Government reserves the right to perform any of the inspections set forth in the specification where such inspections are deemed necessary to assure supplies and services conform to prescribed requirements.

4.1.1 Responsibility for compliance. All items must meet all requirements of Sections 3 and 5. The inspection set forth in this specification shall become a part of the contractor's overall inspection system or quality program. The absence of any inspection requirements in the specification shall not relieve the contractor of the responsibility of assuring that all products or supplies submitted to the government for acceptance comply with all requirements of the contract. Sampling in quality conformance does not authorize submission of known defective material, either indicated or actual, nor does it commit the Government to acceptance of defective material.

4.1.2 Inspection records. The manufacturer shall maintain records showing quantitative results of all inspections. The record shall be available to the purchaser and shall be signed by an authorized representative of the manufacturer or the testing laboratory, as applicable.

Downloaded from http://www.everyspec.com

4.2 Classification of inspections. The inspection and testing of the bearings shall be classified as:

a. Qualification inspection (4.3) - Those tests performed by the manufacturer on the specified samples when submitting his product for qualification approval under this specification.

b. Quality conformance inspection (4.4) - Those tests performed by the manufacturer on each lot of bearings manufactured to the requirements of this specification and submitted to the purchaser for acceptance under a purchase order.

4.3 Qualification inspection. Qualification inspection shall consist of all the examinations and tests of this specification. In addition, the qualifying activity reserves the right to require other tests not covered in this specification when such tests are deemed necessary to assure the capability of a newly developed bearing material to perform satisfactorily in applications for which this specification is intended. Qualification of a given bearing with a grooved outer ring qualifies the corresponding bearing with a chamfered outer ring. No bearing may be qualified prior to qualification of the MS14101-8 bearing. The bearings in column II of Table II will not be qualified prior to qualification of the corresponding bearings in column I.

4.3.1 Retention of qualification. The continued listing of a product on the Qualified Products List is dependent upon a periodic verification of the manufacturer's continued compliance with the requirements of this specification and with standardization regulations. As part of that verification process, each manufacturer must complete DD Form 1718 during October of each odd numbered year. This form, supplied by the Qualifying Activity, is to be signed by a responsible official of management and sent to the Naval Air Engineering Center, SESD, Code 9311, Lakehurst, NJ 08733-5100.

4.3.2 Sampling instruction. Qualification test samples shall consist of thirty-seven (37) bearings of MS14101-8, eleven (11) each of the sizes in column I of Table II and seven (7) each of the sizes in column II of Table II upon which qualification is desired. All bearings necessary for tests specified herein shall be furnished by the manufacturer and shall be representative of his normal production. Samples shall be identified as required and forwarded to the activity designated in the letter of authorization from the activity responsible for qualification (see 6.3).

TABLE II. Order of qualifying bearings.

I	II
MS14101-5A MS14101-8 MS14101-12	MS14101-3, -4, -6 MS14101-7, -9 MS14101-10, -14, -16
MS14103-5 MS14103-8 MS14103-12	MS14103-3, -4, -6 MS14103-7, -7A, -9 MS14103-10, -14, -16

Downloaded from http://www.everyspec.com

4.3.3 Certified test report. The manufacturer shall furnish a certified test report showing that the manufacturer's product satisfactorily conforms to this specification. The test report shall include as a minimum, actual results of the tests specified herein. When the report is submitted it shall be accompanied by a dated drawing which completely describes the manufacturer's product by specifying all dimensions and tolerances, construction, materials, heat treat, finishes, part marking, and control specifications. The liner description and bonding process need not be called out except by reference to the manufacturer's internally documented and maintained specifications. The manufacturer's part number for each size shall be included on the drawing.

4.3.4 Qualification sampling. Qualification sampling shall be in accordance with Table III.

TABLE III. Qualification test samples.

Examination or Test	Paragraph Number	Samples to be Tested
Examination of product	4.5.1	5
Preparation for delivery	4.5.2	5
Radial static limit load	4.6.1	3
Axial static limit load	4.6.2	3
Oscillation under radial load	4.6.3	2/ 3
No-load rotational breakaway torque	4.6.4	3
Fluid contamination	4.6.5	1/ 3 (each fluid)
High temperature	4.6.6	1/ 3
Sub-zero temperature	4.6.7	1/ 3
Conformity	4.6.8	1
Bond integrity	4.6.9	1

1/ MS14101-8 size only.
2/ -5, -8 and -12 sizes only.

4.4 Quality conformance inspections. The quality conformance inspections shall consist of the inspections listed in Table IV.

Downloaded from http://www.everyspec.com

TABLE IV. Quality conformance inspections.

Examinations or Tests	Requirement Paragraph	Test Paragraph
a. Dimensions	3.4.1	4.5.1
b. Identification of product	3.6	4.5.1
c. Workmanship	3.7	4.5.1
d. Preparation for delivery		4.5.2
e. No-load rotational breakaway torque	3.5.6	4.6.4
f. Conformity	3.4.4	4.6.8
g. Liner condition & bond integrity	3.4.5	4.6.9
h. Radial clearance*	3.5.10	4.6.10
i. Axial clearance*	3.5.11	4.6.11

* Applies only to bearings which are provided without preload torque (see 3.5.10).

4.4.1 Inspection lot. The inspection lot shall consist of finished bearings, having a single part number, manufactured by the procedures established for the originally qualified bearings, swaged on the same tool setup, produced as one continuous run or order or portion thereof, and with one or more liner bonding runs which can be defined by means of in-house processing records.

4.4.2 Sampling.

4.4.2.1 Sample for quality conformance tests (a) through (d). The sample bearings shall be selected from each inspection lot in accordance with MIL-STD-105, single normal inspection (Table IIA), AQL 2.5, Inspection Level II.

4.4.2.2 Sample for quality conformance test (e). Inspection shall be 100% of the lot. Individual bearings which are rejected due to high preload torque values may be reworked by the bearing manufacturer and then reinspected 100%. Individual bearings which are rejected due to low torque values may not be reworked and shall not be accepted.

4.4.2.3 Sample for quality conformance tests (f) and (g). The sample bearing shall be selected from each inspection lot in accordance with Table V. The sample bearing shall be picked at random from the lot.

Downloaded from http://www.everyspec.com

TABLE V. Destructive inspection sampling plan.

A = Acceptance R = Rejection Number						
Lot Size	Normal Inspection			Tightened Inspection		
	Sample Size	A	R	Sample Size	A	R
2-50	2	0	1	4	0	1
51-500	3	0	1	6	0	1
501-5000	5	1	2	10	1	2
5001-50000	8	1	2	16	1	2

4.4.2.4 Sample for quality conformance test (h). Each lot of bearings which are provided without preload torque shall first be inspected for no-load breakaway torque according to the sampling requirement of 4.4.2.2. Individual bearings which exhibit preload torque of 0.1 inch-pound or greater need not be inspected for radial clearance. Each bearing which exhibits less than 0.1 inch-pound preload torque shall be inspected for radial clearance in accordance with 3.5.10 and 4.6.10. Individual bearings which exhibit excessive radial clearance shall be rejected; they may not be reworked and shall not be offered for sale or acceptance under this specification or MIL-B-8942.

4.4.2.5 Sample for quality conformance test (i). Each lot of bearings which are provided without preload torque shall be 100% inspected for axial clearance in accordance with 3.5.11 and 4.6.11. Individual bearings which exhibit excessive axial clearance shall be rejected; they may not be reworked and shall not be offered for sale or acceptance under this specification or MIL-B-8942.

4.4.3 Quality assurance certification. For each inspection lot the manufacturer shall maintain and supply to the purchaser upon demand:

a. Certified copies of all records or quality conformance tests specified in 4.4 and the purchase order.

b. Certification that the bearings were produced without any change in the product design, description, materials or bonding related operations from those supplied for qualification testing per requirements of 3.1.1 and 3.1.2.

These records and certifications shall identify the manufacturer of the bearings, the address of the plant where they were manufactured, the purchaser and the purchase order number.

Downloaded from http://www.everyspec.com

4.4.4 Resubmitted inspection lots.

4.4.4.1 Resubmitted inspection lots for quality conformance tests (a) through (d). The paragraph titled "Resubmitted Lots or Batches" of MIL-STD-105 shall apply. A resubmitted inspection lot shall be inspected using tightened inspection. Where the original acceptance number was zero, a sample size represented by the next higher sample size code letter shall be selected. When an inspection lot is resubmitted, full particulars concerning the cause of previous rejections and the action taken to correct the defects found in the inspection lot shall be furnished by the contractor to the procuring activity.

4.4.4.2 Resubmitted inspection lots for quality conformance tests (f) through (g). A lot which was rejected under Normal Inspection of Table V may be reinspected under Tightened Inspection of Table V without the reexamination or retesting defined in MIL-STD-105. A lot which was rejected under Tightened Inspection shall not be offered for sale or acceptance under this specification or MIL-B-8942.

4.5 Examinations.

4.5.1 Examination of product. The bearings shall be examined to determine conformance to the requirements of this specification and the applicable MS for material, plating, dimensions, finish, identification of product, workmanship and requirements not covered by tests.

4.5.2 Preparation for delivery. Packing and marking shall be inspected to determine conformance to Section 5.

4.6 Test methods. Unless otherwise specified, all tests shall be conducted at room temperature. When performing the tests specified in 4.6.1, 4.6.3, 4.6.5, and 4.6.6 on molded liner bearings, the bearing shall be installed in the test fixture so that the maximum load is applied at the larger injection hole.

4.6.1 Radial static limit load. The bearing shall be installed in a test fixture as shown in figure 1. The use of differential temperatures for installation will not be allowed. A preload of 4 to 6 percent of the radial static load shall be applied to the bearing for 3 minutes, and the measurement device set at zero. The load shall then be increased at the rate of 1 percent of the specified load per second until it equals the radial static limit load. The total deflection shall be the reading at the radial static limit load after 2 minutes. The load shall then be reduced at the same rate to the preload value. The permanent set is the reading at preload. The ultimate radial load (see 3.5.3) shall be applied at the rate of 1 percent of the specified load per second

4.6.2 Axial static limit load. The test bearing shall be installed in a test fixture as shown on figure 2. The hole in the support fixture for clearance of the ball shall be the nominal diameter of the ball plus double the thickness of the liner. The bearing shall be preloaded between 4 to 6 percent of the axial limit load. After holding for 3 minutes, the measuring device shall be set at zero. The loads shall be increased at the rate of 1

Downloaded from http://www.everyspec.com

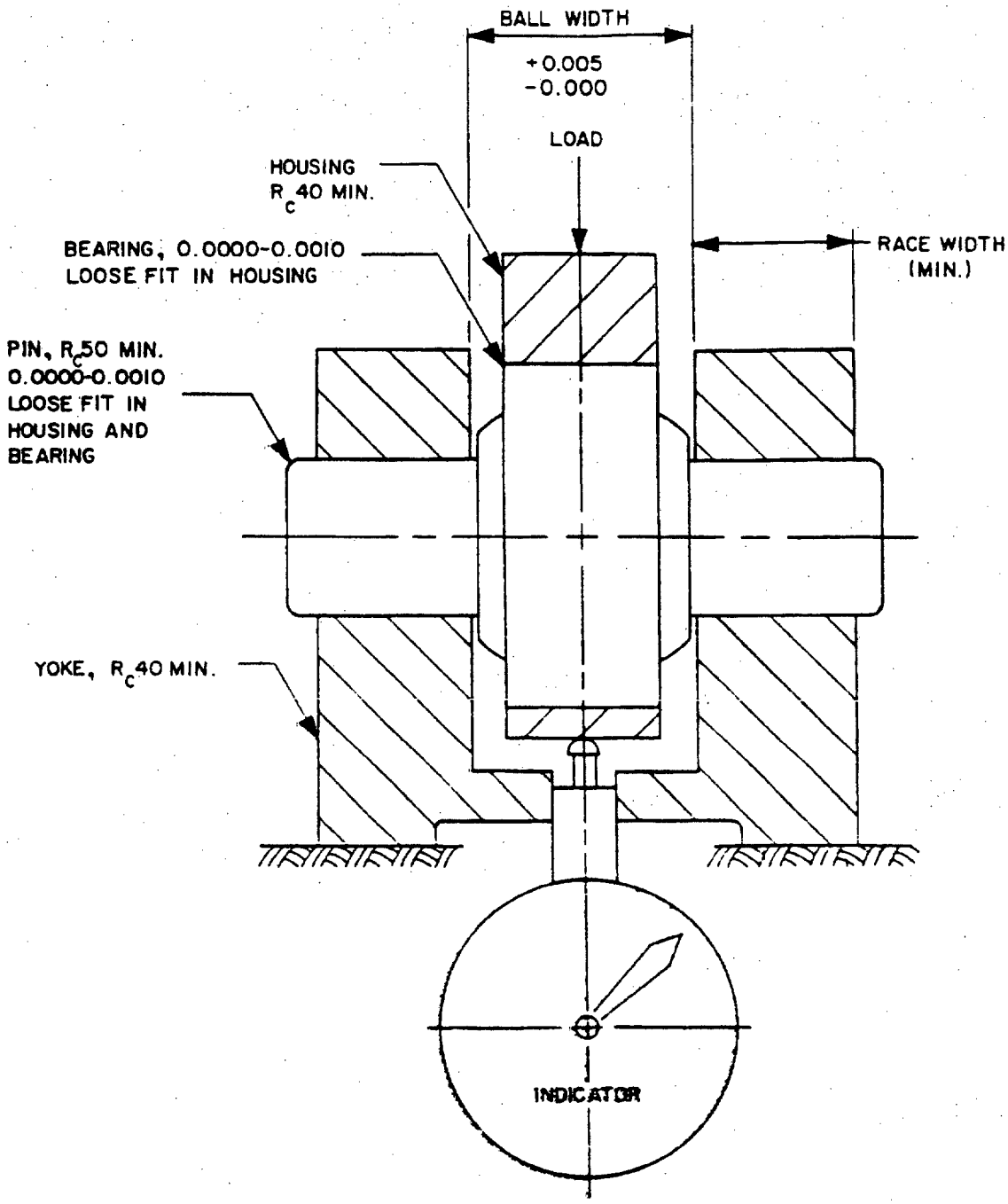

FIGURE 1. Radial static limit load test fixture.

Downloaded from http://www.everyspec.com

percent of the specified load per second until it equals the axial static limit load. It shall be held for 2 minutes, then reduced at the same rate to the preload value. The permanent set is the reading at preload. The ultimate axial load shall be applied at the rate of 1 percent of the specified load per second (see 3.5.3).

4.6.3 Oscillation under radial load. The bearing shall be installed in a steel housing, using a slip fit, with a hardened shaft (R 50 minimum) in the bore using a .0005 to .0015 inch clearance fit. The bearing shall be so gripped as to place the shaft in double shear with a minimum of bending and to permit rotation of the ball with respect to the outer ring and torque read-out while the bearing is under radial load. A dial indicator or electronic pickup device shall be so mounted as to permit measurement of any radial movement of the ball with respect to the outer ring. The oscillating load specified on the applicable MS shall be applied and held statically for 15 minutes. At the end of this time, the indicating device shall be set to zero and the oscillating test started. The test shall be run in such a manner that the ball is oscillated ±25 degrees from the zero position (50 degrees included angle), at 10 cpm minimum for 25,000 cycles. A cycle shall consist of rotation from zero to +25 degrees and return thru zero to -25 degrees and return to zero (100 degrees total). The wear shall be measured with the indicating device either continuously or at sufficient intervals as to produce a plot of wear in thousandths of an inch vs. life in cycles. Upon completion of the test, the loaded rotation breakaway torque shall be measured and shall be as specified in Table VI. After testing, one bearing shall be subjected to the bend integrity test of 4.6.9.2.

TABLE VI. Maximum allowable after test torque (in.-lbs).

Dash Number	Wide	Narrow
4	65	45
5	90	80
6	150	110
7	230	150
8	325	210
9	455	295
10	540	425
12	820	755
14	1150	1045
16	2670	1750

Downloaded from http://www.everyspec.com

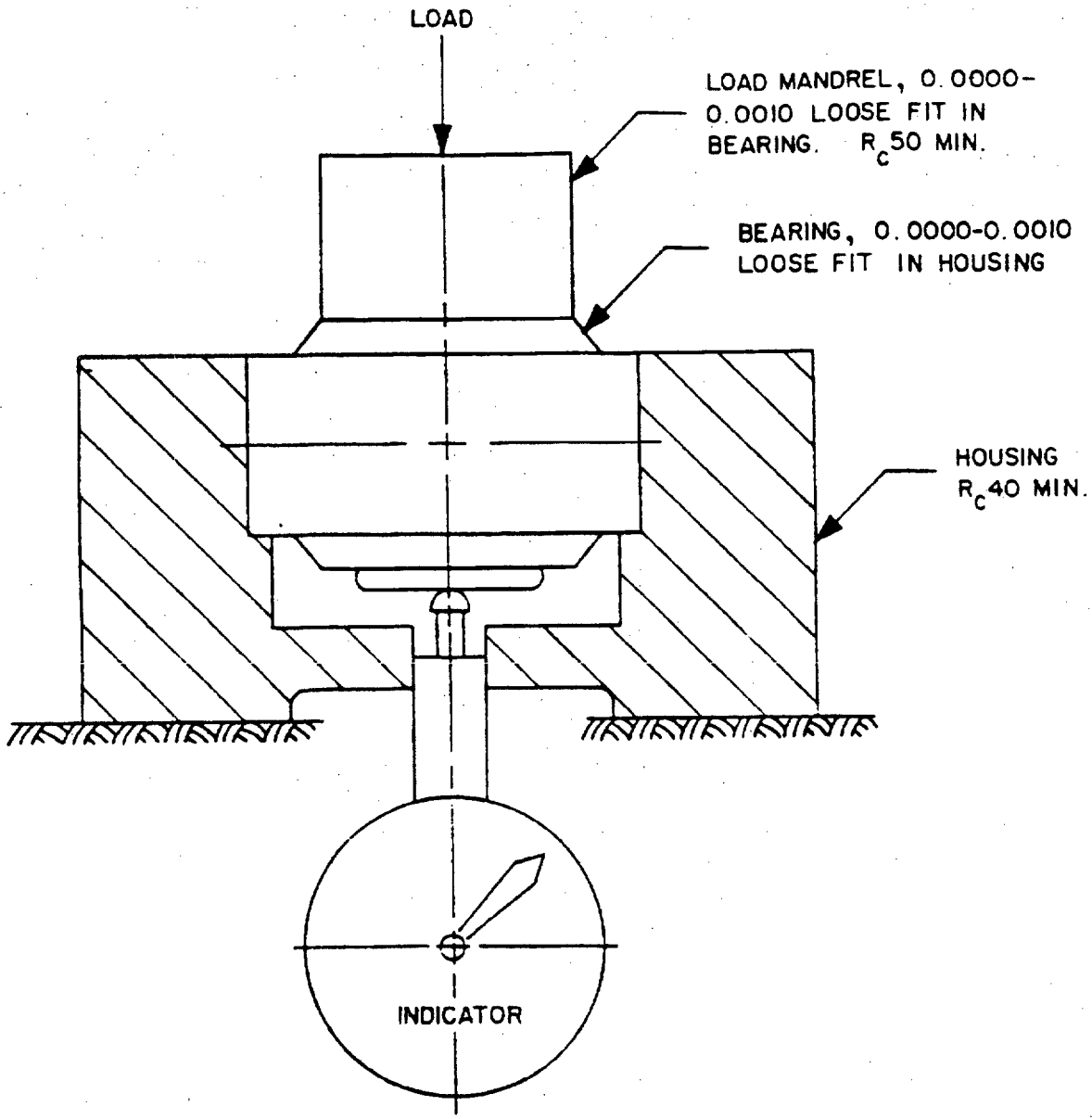

FIGURE 2. Axial static limit load test fixture.

Downloaded from http://www.everyspec.com

4.6.4 No-load rotational breakaway torque. The no-load rotational breakaway torque shall be determined by holding the outer ring of the bearing fixed while rotating the ball about the bearing axis. The outer ring shall be held in such a manner as to minimize bearing distortion and the resultant effect on bearing preload torque. The use of excessive ball clamping forces to drive the ball must also be avoided. The ball shall be misaligned in two mutually perpendicular planes and rotated through two to three revolutions immediately prior to testing. This operation is mandatory and may require some simple fixturing. The test shall then be conducted by gradually applying torque to the ball; the minimum torque required to start the ball moving shall be recorded. The no-load rotational breakaway torque shall be as specified on the applicable MS.

4.6.5 Fluid contamination. Eighteen bearings (3 for each fluid) shall be immersed for 24 hours in each of the following fluids at 160 ±5°F, except for (b) which shall be at 110 ±5°F:

a. Phosphate Ester Hydraulic Fluid

b. TT-S-735, Type VII Standard Test Fluid, or MIL-T-5624 Turbine Fuel Grades JP-4 or JP-5

c. MIL-L-7808 Lubricating Oil

d. MIL-H-5606 Hydraulic Oil

e. MIL-A-8243 Anti-Icing Fluid

f. MIL-H-83282 Hydraulic Fluid

Within 1/2 hour after removal from the test fluid the bearing shall be tested in accordance with 4.6.3. The test load shall be 75% of the load specified on the applicable MS. After testing, six of the tested bearings (one from each fluid) shall be subjected to the bond integrity test of 4.6.9.2.

4.6.6 High temperature. Three bearings shall be subjected to the test of 4.6.3, except that the bearing shall be heated in such a way that the ball/liner interface is maintained at a temperature of 325°F minimum. The test load shall be 100% of the load specified on the applicable MS. After testing, one bearing shall be subjected to the bond integrity test of 4.6.9.2.

4.6.7 Sub-zero temperature. Three bearings shall be subjected to the test of 4.6.3 except that the bearings shall be cooled during the test. The test load shall be 75% of the load specified on the applicable MS. The oscillation rate is optional except that the minimum shall be 5 CPM. Intermittent operation of the test machine is allowable if necessary to counteract the effects of frictional heating. The first 1000 test cycles shall be conducted at room temperature followed by 24,000 cycles at low temperature. Upon completion of the first 1000 cycles, oscillation shall be stopped and the test bearing cooled in such a way that the ball/liner interface temperature is maintained at or below -10°F for the sub-zero temperature portion of the test. The bearing shall be allowed to cold soak at this temperature for one-half hour (minimum) after which time oscillation shall be continued until the remaining 24,000 cycles have been completed. In the event that the normal

Downloaded from http://www.everyspec.com

wear measurement techniques are inaccurate at low temperature, then alternative wear methods may be used provided the method is fully described in the qualification test report. After testing, one bearing shall be subjected to the bond integrity test of 4.6.9.2.

4.6.8 Conformity.

4.6.8.1 Normal conformity. Encapsulate the bearing in plastic material, as used in metallurgical mounts, to prevent motion of the ball with respect to the outer ring. Section the bearing on a diameter and normal to the outer ring side face to produce a surface as in figure 3(a) or 3(b). (Bearings which have been subjected to wear testing shall be sectioned so that the entire wear area is exposed when the ball is removed in 4.6.9.2.) Grind and polish the face to obtain a true view of the edges of the curved portions of the ball and outer ring. By use of an optical comparator or other suitably accurate technique, measure dimension "t" radially from the ball to the outer ring. The measurements need not be taken closer to the outer ring face than ten percent of "H" (.025 minimum) except when overforming of the outer ring has occurred. The normal conformity must meet the applicable requirements of 3.4.4.1. Conformity in the ten percent of "H" region (see H/10 in figure 3(a) and 3(b)) is not controlled by this specification except when overforming of the outer ring has occurred. Overforming of the outer ring is defined as the condition when the side portions of the outer ring are in closer proximity to the ball surface than the middle portion of the outer ring. When overforming is observed then two additional measurements (one in each H/10 region) shall be taken to determine if the amount of overforming meets the requirements of 3.4.4.1 or 3.4.4.2 as applicable.

4.6.8.2 Circumferential conformity. Bearings with molded liners shall be encapsulated in plastic material as used in metallurgical mounts to prevent motion of the ball with respect to the outer ring. Section the bearing along the diameter described by the centerline of the outer ring width so as to produce a surface as shown in figure 4. Grind and polish the surface to obtain a true view of the exposed liner cross section. By use of an optical comparator or other suitably accurate technique, measure dimension "6" radially from the center of the bore at a minimum of eight uniformly spaced positions. The circumferential conformity shall meet the requirements of 3.4.4.3.

4.6.9 PTFE liner condition and bond integrity. The sectioned half bearing not used in 4.6.8 shall be broken out of the mount and used to determine liner condition and bond integrity. At the manufacturer's option, the bond integrity test may be performed on a part which has not been encapsulated. In the case where a disagreement exists between a manufacturer and a user on bond integrity, an unencapsulated bearing shall be used for final resolution.

4.6.9.1 Visual examination. Visually examine the exposed liner surface for conformance to the applicable requirements of 3.4.5.1, 3.7 and the MS drawing.

4.6.9.2 Bond integrity and peel strength. Peel the liner away from the metal substrate and evaluate the peel strength and adhesive bond appearance per 3.4.5.2. A blade or scribe may be used to initiate the peel. To determine

Downloaded from http://www.everyspec.com

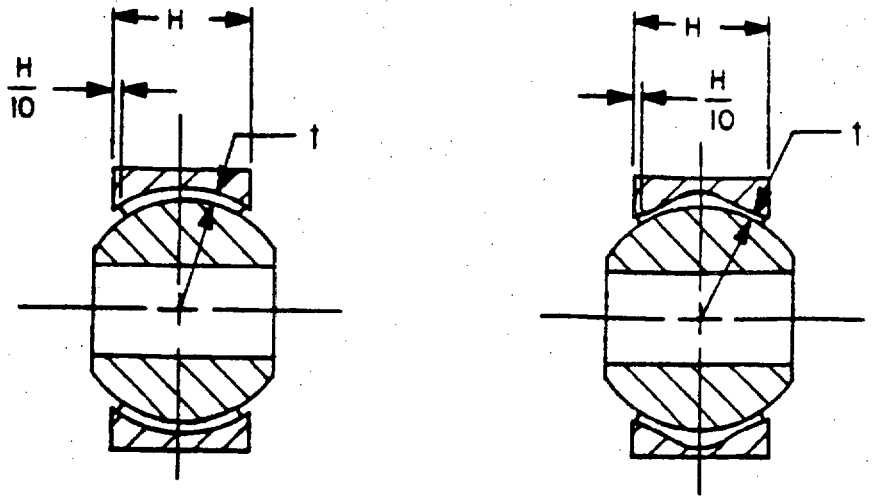

NORMAL CONFORMITY
TYPE I BEARING
FIGURE 3(a)

NORMAL CONFORMITY
TYPE II BEARING
FIGURE 3(b)

FIGURE 3. Normal conformity.

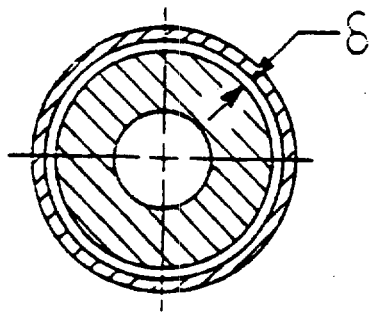

CIRCUMFERENTIAL CONFORMITY
TYPE II BEARING

FIGURE 4. Circumferential conformity.

Downloaded from http://www.everyspec.com

peel strength, the liner shall be attached to a calibrated spring scale or tension testing machine of the type described in ASTM C-794 and the liner peeled back from the substrate at 140° ±40° angle to the bond surface at a speed of 0.5 to 1.0 inch per minute (see figure 5). The average peel strength value shall be recorded and included in the test report. Where possible, the peel shall be conducted on the entire width of the bonded liner. When the peel is conducted on the entire width of the outer ring, the width for calculating peel strength in pounds per inch shall be the machined width minus 0.050 inch to account for chamfers and edge effects. At the manufacturer's option, or when peeling of the full outer ring width is impractical, the liner may be cut through to the metal substrate to form a peel sample with a minimum width of 0.500 inch. This peel sample may be cut either parallel to or perpendicular to the outer ring side face. This sample shall be peeled as previously described. The peel strength test shall be waived for the -3, -4 and -5 size bearings, but the liner shall be peeled by hand to permit visual examination of the bond line for voids.

Following liner peel, the adhesive bond appearance shall be evaluated to determine the location and size of any voids or unbonded areas as specified in 3.4.5.2. A void is an area where the actual substrate is smooth and shiny with no visible adhesive. An unbonded area is where the adhesive remaining on the metal substrate is smooth and shiny indicating a lack of bonding pressure. In the event the liner cannot be removed without employing chipping, scraping, or abrasive techniques, the liner shall be considered to be properly bonded and free of voids, and shall be classed as nonpeelable.

4.6.10 Radial play. Radial play shall be measured with the appropriate test load applied to one member (ball or outer ring) perpendicular to the bore axis alternately in opposite directions per paragraph 3.5.10.

Bearing Size	Test Load
-3K, -4K, -5K, -6K	± 10 lbs
-7K, -8K, -9K	± 15 lbs
-10K, -12K, -14K, -16K	± 25 lbs

The other member shall be rigidly clamped. The fixturing for applying the load to one member and reacting the load in the other member shall be designed so that neither member will be distorted during the test. Radial play shall be the full dial movement less shaft clearance.

4.6.11 Axial play. Axial play shall be measured with the appropriate test load applied to one member (ball or outer ring) parallel to the bore axis alternately in opposite directions per paragraph 3.5.11.

Bearing Size	Test Load
-3K, -4K, -5K, -6K	± 10 lbs
-7K, -8K, -9K	± 15 lbs
-10K, -12K, -14K, -16K	± 25 lbs

Downloaded from http://www.everyspec.com

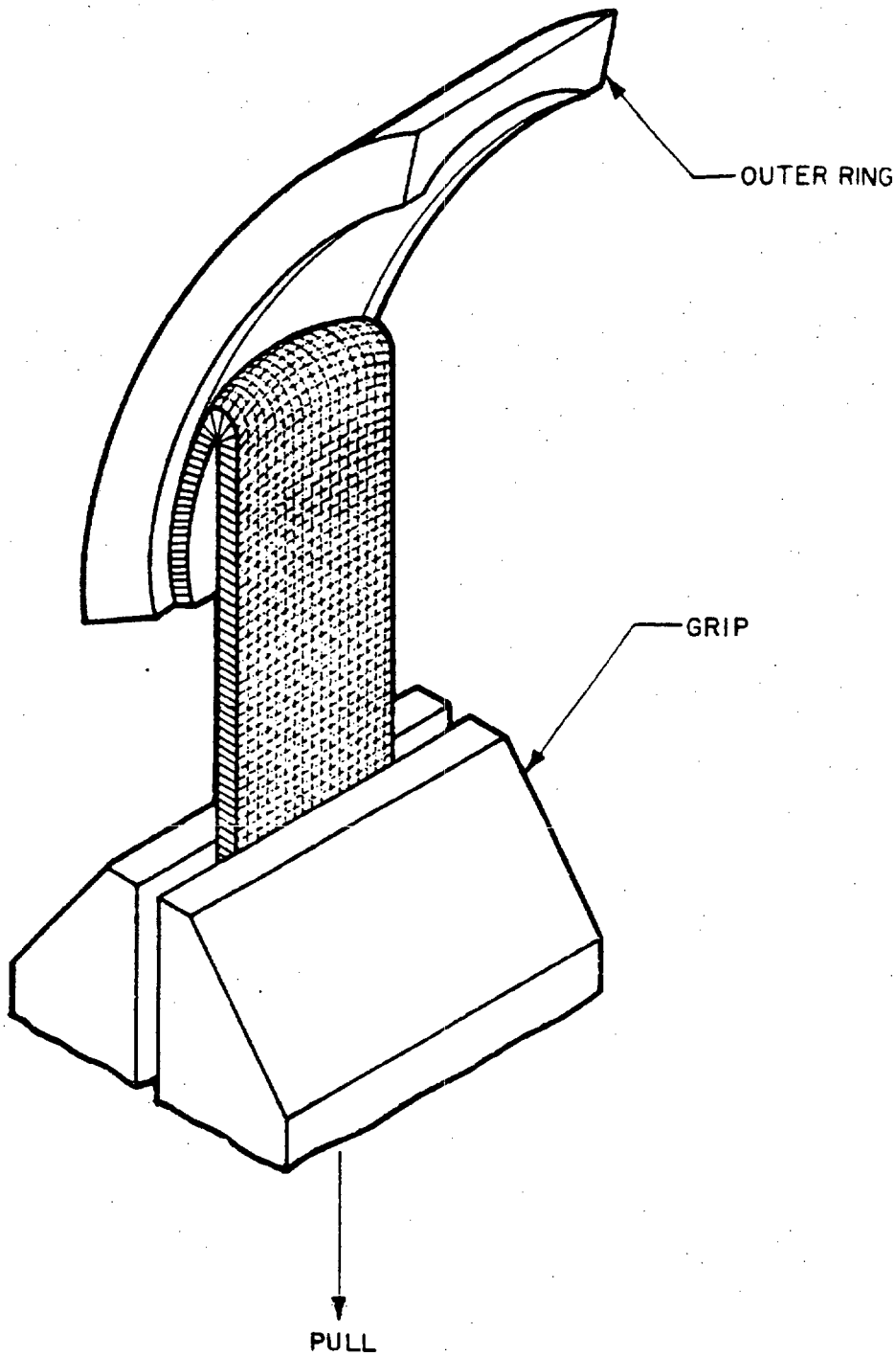

FIGURE 5. Example of peel test fixture.

Downloaded from http://www.everyspec.com

The other member shall be rigidly clamped. The fixturing for applying the load to one member and reacting the load in the other member shall be designed so that neither member will be distorted during the test. Axial play shall be the full dial movement.

5. PACKAGING

5.1 Preservation. Packaging shall be in accordance with Level A or Level C as specified in paragraph 6.2. These bearings will not tolerate cleaning solvent, grease or oil. Prior to packaging bearings shall be cleaned in one of the following ways:

a. Clean, dry compressed air per MIL-P-116.

b. Wiping with soft, clean cloth per MIL-P-116.

c. Manufacturer's established cleaning procedures for this bearing.

5.1.1 Level A. Packaging shall be in accordance with Level A of MIL-B-197. The manufacturer's lot control number shall be marked on each package.

5.1.2 Level C. Packaging shall be in accordance with the fabricator's commercial practice. The manufacturer's lot control number shall be marked on each package.

5.2 Packing.

5.2.1 Level A. Bearings packaged as specified in 5.1.1 shall be packed for overseas shipment and storage in accordance with MIL-B-197.

5.2.2 Level B. Bearings packaged as specified in 5.1.1 shall be packed for domestic shipment and storage in accordance with MIL-B-197.

5.2.3 Level C. Bearings packaged as specified in 5.1.2 shall be packed in a manner to insure carrier acceptance and safe delivery at destination. The containers shall be in accordance with the Uniform Freight Classification Rules or regulations of other carriers, as applicable to the mode of transportation.

5.3 Marking. Interior packages and exterior shipping containers shall be marked in accordance with MIL-STD-129. The nomenclature shall include:

BEARINGS, PLAIN, SELF-ALIGNING, SELF-LUBRICATING,
LOW SPEED OSCILLATION

6. NOTES

6.1 Intended use. The bearings are intended primarily for use in airframe applications requiring high loads at low rotational oscillatory speeds. For specific design information on the capability of these bearings under particular loads and environmental conditions the user is referred to MIL-STD-1599, Bearings, Control System Components and Associated Hardware Used in the Design and Construction of Aerospace Mechanical Systems and Subsystems.

Downloaded from http://www.everyspec.com

6.2 Ordering data. Procurement documents should specify:

a. Title, number and date of this specification.

b. MS part number (see 3.3).

c. Quantity.

d. Applicable levels of preservation and packing (see 5.1 and 5.2)

e. Quality Assurance Certification (see 4.4.3).

The procuring activity is advised that in the event a suitable MS part is not available for a particular application, then the appropriate airframe manufacturer's drawing should be made the applicable drawing and the requirements of the quality conformance section of this specification should be part of the conditions for procurement.

6.3 Qualification. With respect to products requiring qualification, awards will be made only for products which are, at the time set for opening of bids, qualified for inclusion in Qualified Products List 81820 whether or not such products have actually been so listed by that date. The attention of the contractors is called to these requirements, and manufacturers are urged to arrange to have the products that they propose to offer to the Federal Government tested for qualification in order that they may be eligible to be awarded contracts or purchase orders for the products covered by this specification. The activity responsible for the Qualified Products List is the Naval Air Systems Command (Attention: Naval Air Engineering Center, Systems Engineering and Standardization Department, Code 9311, Lakehurst, NJ 08733-5100); however, information pertaining to qualification of products may be obtained from the Naval Air Development Center, Code 6061, Warminster, PA 18974-5000.

6.3.1 Qualification tests will be authorized only upon presentation of drawings and certified test reports that indicate the bearings conform to this specification.

6.4 Changes from previous issue. The margins of this specification are marked with vertical lines to indicate where changes (additions, modifications, corrections, deletions) from the previous issue were made. This was done as a convenience only and the Government assumes no liability whatsoever for any inaccuracies in these notations. Bidders and contractors are cautioned to evaluate the requirements of this document based on the entire content irrespective of the marginal notations and relationship to the last previous issue.

Downloaded from http://www.everyspec.com

Custodians:
Navy - AS
Air Force - 11
Army - AV

Review Activities:
Air Force - 99
Army - AR
DLA - IS

User Activities:
Navy - SH

Preparing Activity:
Navy - AS
(Project No. 3120-0661)

Downloaded from http://www.everyspec.com

(TO DETACH THIS FORM, CUT ALONG THIS LINE.)

STANDARDIZATION DOCUMENT IMPROVEMENT PROPOSAL

(See Instructions – Reverse Side)

1. DOCUMENT NUMBER	2. DOCUMENT TITLE
MIL-B-81820E	Bearings, Plain, Self-Aligning, Self-Lubricating, Low Speed

3a. NAME OF SUBMITTING ORGANIZATION	4. TYPE OF ORGANIZATION *(Mark one)*
	☐ VENDOR
b. ADDRESS *(Street, City, State, ZIP Code)*	☐ USER
	☐ MANUFACTURER
	☐ OTHER *(Specify)*: _____

5. PROBLEM AREAS

a. Paragraph Number and Wording:

b. Recommended Wording:

c. Reason/Rationale for Recommendation:

6. REMARKS

7a. NAME OF SUBMITTER *(Last, First, MI)* – Optional	b. WORK TELEPHONE NUMBER *(Include Area Code)* – Optional
c. MAILING ADDRESS *(Street, City, State, ZIP Code)* – Optional	8. DATE OF SUBMISSION *(YYMMDD)*

DD FORM 82 MAR 1426 PREVIOUS EDITION IS OBSOLETE.

Downloaded from http://www.everyspec.com

INSTRUCTIONS: In a continuing effort to make our standardization documents better, the DoD provides this form for use in submitting comments and suggestions for improvements. All users of military standardization documents are invited to provide suggestions. This form may be detached, folded along the lines indicated, taped along the loose edge *(DO NOT STAPLE)*, and mailed. In block 5, be as specific as possible about particular problem areas such as wording which required interpretation, was too rigid, restrictive, loose, ambiguous, or was incompatible, and give proposed wording changes which would alleviate the problems. Enter in block 6 any remarks not related to a specific paragraph of the document. If block 7 is filled out, an acknowledgement will be mailed to you within 30 days to let you know that your comments were received and are being considered.

NOTE: This form may not be used to request copies of documents, nor to request waivers, deviations, or clarification of specification requirements on current contracts. Comments submitted on this form do not constitute or imply authorization to waive any portion of the referenced document*(s)* or to amend contractual requirements.

(Fold along this line)

(Fold along this line)

DEPARTMENT OF THE NAVY
Commanding Officer
Naval Air Engineering Center
Systems Engineering Standardization Department
(SESD), Code 93
Lakehurst, NJ 08733

OFFICIAL BUSINESS
PENALTY FOR PRIVATE USE $300

NO POSTAGE NECESSARY IF MAILED IN THE UNITED STATES

BUSINESS REPLY MAIL
FIRST CLASS PERMIT NO. 12503 WASHINGTON D.C.

POSTAGE WILL BE PAID BY THE DEPARTMENT OF THE NAVY

Commanding Officer
Naval Air Engineering Center
Systems Engineering Standardization Department
(SESD). Code 93
Lakehurst, NJ 08733

ATTN: TJM (9322)