MIL-B-26220D(USAF)

10 April 1974

Superseding
MIL-B-26220C(USAF)
30 March 1964 and
Amendment 2
16 January 1971

MILITARY SPECIFICATION

BATTERIES, STORAGE, AIRCRAFT, NICKEL-CADMIUM, GENERAL SPECIFICATION FOR

1. SCOPE

1.1 This specification covers nickel-cadmium storage batteries, for use in aircraft.

2. APPLICABLE DOCUMENTS

2.1 The following documents, of the issue in effect on date of invitation for bids or request for proposals, form a part of this specification to the extent specified herein.

SPECIFICATIONS

Military

MIL-E-5272	Environmental Testing, Aeronautical and Associated Equipment, General Specification for
MIL-P-6063	Packaging of Batteries, Storage, Aircraft (Charged and Dry - Uncharged and Moist)
MIL-C-18148	Connector, Plug, Electrical, Quick-Disconnect, Battery

STANDARDS

Military

MIL-STD-100	Engineering Drawing Practices
MIL-STD-129	Marking for Shipment and Storage
MIL-STD-130	Identification Marking of U.S. Military Property
MIL-STD-143	Specifications and Standards; Order of Precedence for Selection of
MIL-STD-831	Test Reports, Preparation Of
MS24496(USAF)	Battery, Aircraft Storage, Nickel-Cadmium 24 Volts, 11 Ampere Hour, 27°C
MS24497(USAF)	Battery, Aircraft Storage, Nickel-Cadmium 24 Volts, 22 Ampere Hour, 27°C
MS24498(USAF)	Battery, Aircraft Storage, Nickel-Cadmium, 24 Volts, 34 Ampere Hour, 27°C

(Copies of documents required by contractors in connection with specific procurement functions should be obtained from the procuring activity or as directed by the contracting officer.)

3. REQUIREMENTS

3.1 Qualification. The battery furnished under this specification shall be a product which has been tested and has passed the qualification tests specified herein, and has been listed on, or approved for listing on, the applicable qualified products list.

3.2 Selection of specifications and standards. Specifications and standards for necessary commodities and services not specified herein shall be selected in accordance with MIL-STD-143.

3.3 Materials

3.3.1 Protective treatment. When materials are used in the construction of the battery that are subject to deterioration when exposed to climatic and environmental conditions likely to occur during service usage, they shall be protected against such deterioration in a manner that will in no way prevent compliance with the performance requirements of this specification. The use of any protective coating that will crack, chip, or scale with age or extremes of climatic and environmental conditions shall be avoided.

3.4 Design and construction. The battery shall conform to this specification and the applicable MS standard.

3.4.1 Intercell connectors. Intercell connectors and all other current-carrying parts shall have sufficient cross-sectional area to withstand a full discharge at any rate the battery is capable of giving.

3.4.2 Battery container. The battery container shall have smooth sides, except for the receptacles, holdown bar, vent tubes, nameplate, latches, and polarity marking. The location of receptacles, holddown bar, vent tubes, nameplate, latches, and polarity marking shall conform to the applicable MS standard.

3.4.3 Container cover. The container cover shall conform to the applicable MS standard.

3.4.3.1 Latches. The cover shall be secured to the battery container by latches conforming to MS18015, or approved equal, and shall be located as specified on the applicable MS standard.

3.4.3.2 Container cover gasket. The gasket used on the container cover shall be cellular-rubber or neoprene and shall be so bonded to the inside of the cover that it will contact the container body.

*3.4.4 Cell retention. The battery cells shall be securely fastened in the container body in such a manner as to permit replacement of individual cells.

3.4.5 Positive terminal. The positive terminal shall be located on the right as seen when looking toward the terminal connections.

3.4.6 Disconnect receptacle, socket lock, and lock pin dimensions. The dimensions of the disconnect receptacle, socket lock, and lock pins shall conform to MIL-C-18148.

3.4.7 Venting system. The venting system shall be so designed that the vent holes in the canister will be located at a distance above the top portion of the cells sufficient to permit proper venting of all gases liberated by the cells when the battery is in any position.

*3.4.7.1 Cell vent. The cell shall incorporate a vent which will remain closed until an internal pressure of at least 2 psig is reached and will open at an internal pressure below 10 psig.

3.4.8 State and storage. Batteries may be furnished either charged and dry or wet and discharged, when specified by procuring activity, provided they meet all requirements when placed in service within 2 years from date of manufacture.

3.4.9 Protective devices. The batteries shall inherently comply with the requirements of the tests specified in section 4 without the use of any protective relays.

*3.4.10 Internally heated batteries. When required by the applicable military standard, batteries shall be equipped with an internal heating device. Batteries so equipped shall meet the requirements of this para and para 3.5.9, 4.6.17, 4.6.19.2 and 4.6.20.2.

*3.4.10.1 Heater characteristics. A heating device shall be included within the battery case as an integral part of the assembly and shall be so located that it will not interfere with, or be damaged by, normal maintenance of the battery. A conducting film type shall not be acceptable.

3.4.10.1.1 The heater element shall be so fabricated and installed in the battery assembly that if one, or more, heater wires fail (open or short circuit), any sparking produced shall be contained within the heater unit and shall not ignite an explosive mixture of hydrogen and oxygen.

3.4.10.1.2 The heater shall be designed and installed to minimize possible damage to the heating element or short circuits to the heating element or short circuits to the battery case or battery current carrying parts during all anticipated operating environments of the battery.

3.4.10.1.3 The heater shall be so designed and installed that it will not open or short circuit due to spilled battery electrolytes.

3.4.10.1.4 The heater shall have a life consistent with that of the battery.

3.4.10.2 Insulation. All current carrying parts of the battery heater and thermoswitches shall be insulated to withstand a potential of 1250 volts (RMS) at commercial frequency for 1 minute between all heater circuit components and the battery case and battery current carrying parts. Any potting material used shall not support flame or absorb moisture and shall be approved by the procuring activity.

3.4.10.3 Wire. The wire used for electrical hookup between the 115-volt plug receptacle, heater element, and thermoswitches shall be AWG size 20, or larger, stranded, with a minimum temperature rating of 200°C. The wire shall be suitable protected against, or be resistant to, the damaging effects of battery electrolyte and gases generated by the battery.

3.4.10.4 Heater voltage. The heater shall operate without damage over a normal range of 101 to 122 volts (RMS) AC, 400 ± 20 Hz. The nominal operating voltage shall be 115 volts, 400 Hz. The heater circuitry shall not fail if a 190-volt RMS transient is applied for 0.1 second every 250 hours of operation.

3.4.10.5 Heater current. The heater current shall not exceed 4 amperes (RMS) maximum at 124 volts.

*3.4.10.6 Heater thermoswitches. A minimum of two snap-action type thermoswitches shall be used in series to sense the battery temperature. The thermoswitches shall so control the heater that the battery temperature is regulated within the range specified. The thermoswitches shall have a switch contact rating compatible with the battery heater current requirements and shall withstand a minimum of 50,000 operating cycles at the maximum rated current, which occurs with the 124 volts applied, without the switch opening and closing temperatures changing more than ±3°C. The thermoswitches shall be capable of 20 cycles of operation with 205V (RMS), 400 Hz applied and a load of 1.7 times rated heater current. The thermoswitches shall have a life consistent with that of the heater. The switches shall be so designed and installed that under no circumstances will their operation ignite an explosive mixture of hydrogen and oxygen. The thermoswitches shall be so located that the temperature of any surface point of the heater will not exceed 113°C

under any condition of operation specified in this specification. The thermoswitches shall be so located and installed that if either thermoswitch fails closed, the battery heater operation shall not be affected. All thermoswitches shall be located inside the battery case.

3.4.10.7 Heater-plug receptacle. The battery shall contain an electrical connector for the heater circuit as specified and located on applicable MS standard. The heater plug receptacle shall meet all environmental conditions called for in this specification. The heater plug receptacle shall be electrically connected as shown on figure 1.

Red lettering not less than .50 inches.

WARNING

HEATER PLUG MUST BE DISCONNECTED
BEFORE REMOVING BATTERY.
ALKALINE BATTERY- DO NOT ADD ACID.
SEE HANDBOOK FOR INSTRUCTIONS.

Red letters not less than .20 inches in height.

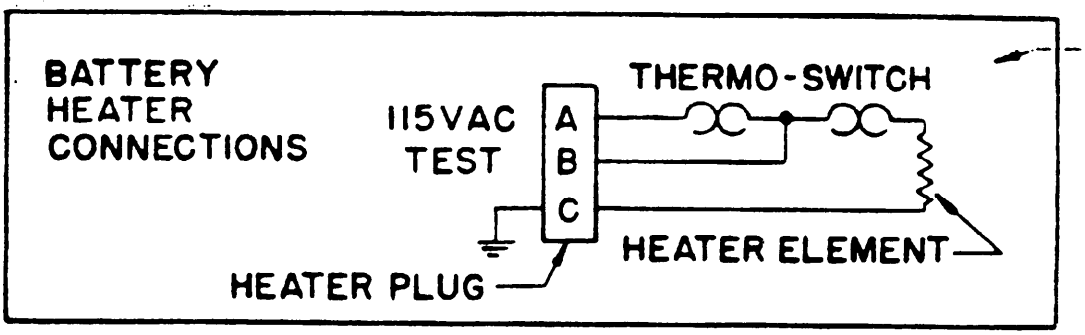

Letters not less than .125 inches in height.

All lettering and wiring diagram to be on contrasting background.

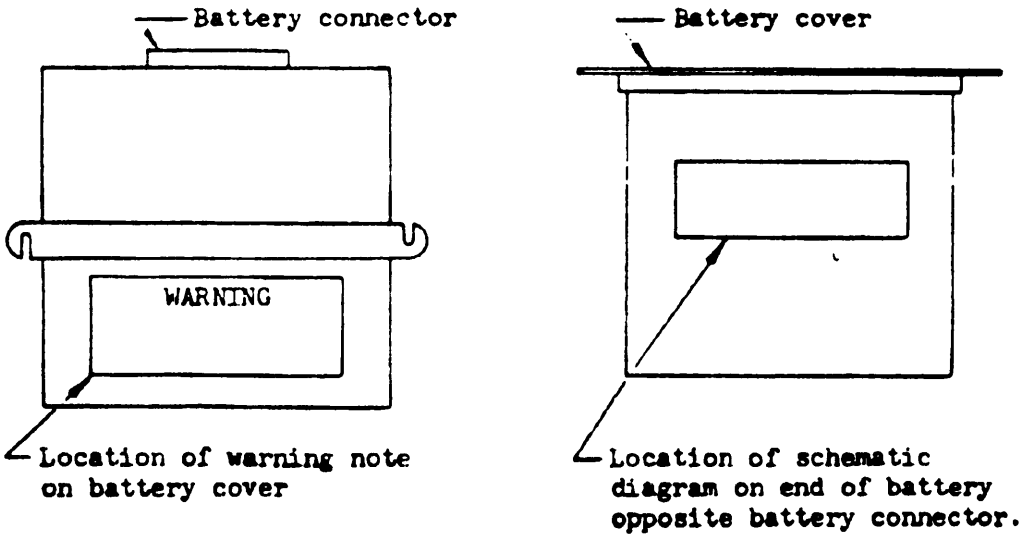

Dimensions in inches.

FIGURE 1. WARNING NOTE AND WIRING DIAGRAM LAYOUT

3.4.10.8 Potting. The thermoswitches and heater plug receptacle shall be either hermetically sealed or specifically potted to meet the environmental requirements of this specification. Potting materials used shall not support flame nor absorb moisture and shall be approved by the procuring activity.

3.4.10.9 Warning note and diagram. The battery shall have a warning note and wiring diagram permanently affixed to the outside surface. The layout, location, and wording requirements for the warning note and wiring diagram shall be essentially the same as shown on figure 1 and shall be so applied to insure legibility for the life of the battery.

3.5 Performance

3.5.1 Strength of socket-lock pins. The socket-lock pins shall withstand a pullout force of 600 pounds and a torsional force of 150 pound-inches.

3.5.2 Operating position. The battery shall operate normally, in an upright position but shall be inverted, partially or completely, without loss of normal voltage under load or leakage of any electrolyte when battery is in any position.

3.5.3 Dielectric. All current-carrying parts shall be sufficiently insulated to withstand a potential of 2,500V (RMS) at commercial frequency for 1 minute between the current-carrying parts and the container.

3.5.4 Gas tightness of cell. The cell shall withstand internal air pressure of 10 psig at 27°C (or a maximum design pressure of the valve) for a period of 5 minutes and an external air pressure of 13 psig for a period of 5 minutes without leakage.

3.5.4.1 Battery covers. Each battery tray shall be fitted with a removable cover to permit easy access to the individual cell jars. When in place, the cover shall so seal the void space above the cell jars as to maintain the internal gas pressure with a head of 55 inches of water for a period of 2 minutes, without loss of manometer pressure equivalent to or in excess of 2.75 inches of water through other than the vent nozzles.

3.5.5 Operation temperatures. The battery shall function normally, shall have dimensional stability, and shall deliver at least 100 percent of the respective rated capacities within the specified voltages, when operating from the low temperatures specified on the applicable MS standard to +71°C without power connected to the heater. At the 1-hour rate, the capacity at +49°C shall be at least equal to that specified on the applicable MS standard at +27°C.

*3.5.6 Life. Batteries shall withstand 200 cycles of charge and discharge as specified in section 4 herein. During the life test, the capacity of a test battery shall not decline below 95 percent of the specified 2-hour capacity.

3.5.7 Cell Capacity. The capacity of the cells shall be within the range established on the applicable MS standard.

3.5.8 Environmental. The battery shall withstand the following environmental conditions without detrimental effect to subsequent operation:

a. Temperature shock

b. Pressures ranging from 30 inches Hg down to 2.13 inches Hg (approximately an altitude of 60,000 feet)

c. Vibration incident to service use

d. Shock forces as anticipated

e. Explosive atmosphere. Operation in the presence of an explosive misture of hydrogen and oxygen gases, both internal and external without causing an explosion

f. Humidity

3.5.9 Internally heated batteries

3.5.9.1 Heater and thermoswitches. With an input voltage range of 110 to 124 volts, 380 to 420 Hz, the battery heater and thermoswitches shall be capable of heating, and controlling battery temperature as follows:

a. With the battery at -54°C and in a -54°C ambient, 60 minutes of heater operation shall so raise the battery temperature that the battery can supply 82 percent of the 1-hour discharge rate for 60 minutes with battery terminal voltage above 18 volts. With the heater energized for 3 hours, the battery temperature shall be such that the battery can supply 82 percent of the 1-hour discharge rate amperes for 80 minutes, with battery terminal voltage above 18 volts.

b. With ambient temperatures between -54°C and 13°C, the maximum heater surface temperature shall not exceed 113°C, and the maximum cell link temperature shall not exceed 27°C. The thermoswitches shall be open in ambient temperature above 13°C. After 4 hours of heater operation, the maximum heater surface hot spot temperature shall not exceed 82°C, and the average temperature of this hot spot shall not exceed 57°C when averaged over a 1-hour period. The cell link temperatures shall have stabilized between -1°C and 21°C with 14°C maximum difference between cell link temperatures.

3.5.10 High temperature float charge. A fully charged battery at an initially stabilized temperature of 49°C shall be capable of float charging at 28.5 ±.5 volts for a minimum period of 50 hours without incurring a current or thermal runaway. There shall be sufficient electrolyte capacity per cell so that addition of water will not be necessary during the 50-hour float charge period. The battery shall not expel electrolyte during the charge period and its temperature shall not exceed 71°C. The float charge current shall not exceed 4 amperes at the completion of the 50-hour period.

*3.6 Part numbering of interchangeable parts. All parts having the same manufacturer's part number shall be functionally and dimensionally interchangeable. The item identification and part number requirements of MIL-STD-100 shall govern the manufacturer's part numbers and changes thereto.

3.7 Operational marking

3.7.1 Container markings. The polarity of the terminal shall be plainly indicated on the container body. The positive terminal shall be marked plus, and the negative terminal shall be marked minus.

*3.7.2 Caution decal. The battery cover shall have a caution note permanently affixed to the outside surface. The layout, location, and wording requirements for the caution note shall be essentially the same as shown in figure 2 and shall be applied to insure legibility for the life of the battery.

3.8 Identification of product. Equipment, assemblies, and parts shall be marked in accordance with MIL-STD-130. The following special marking shall be included:

MS Part No. _____
_____V_____Ampere-Hour at 2-hour rate
Weight filled_____lb
Open circuit voltage full charge_____
Charging rate: Start_____Finish_____

3.8.1 Manufacturing date. The month and year of manufacture shall be permanently marked on each cell. The day of the month may be included, if the manufacturer so desires.

3.9 Workmanship. Workmanship shall be in accordance with high-grade aircraft battery manufacturing practice.

4. QUALITY ASSURANCE PROVISIONS

4.1 Responsibility for inspection. Unless otherwise specified in the contract or purchase order, the supplier is responsible for the performance of all inspection requirements as specified herein. Except as specified in the contract or order, the supplier may utilize his own facilities or any commercial laboratory acceptable to the Government. The Government reserves the right to perform any of the inspections set forth in the specification where such inspections are deemed necessary to assure supplies and services conform to prescribed requirements.

4.2 Classification of tests. The inspection and testing of batteries shall be classified as follows:

a. Qualification testing

b. Acceptance tests

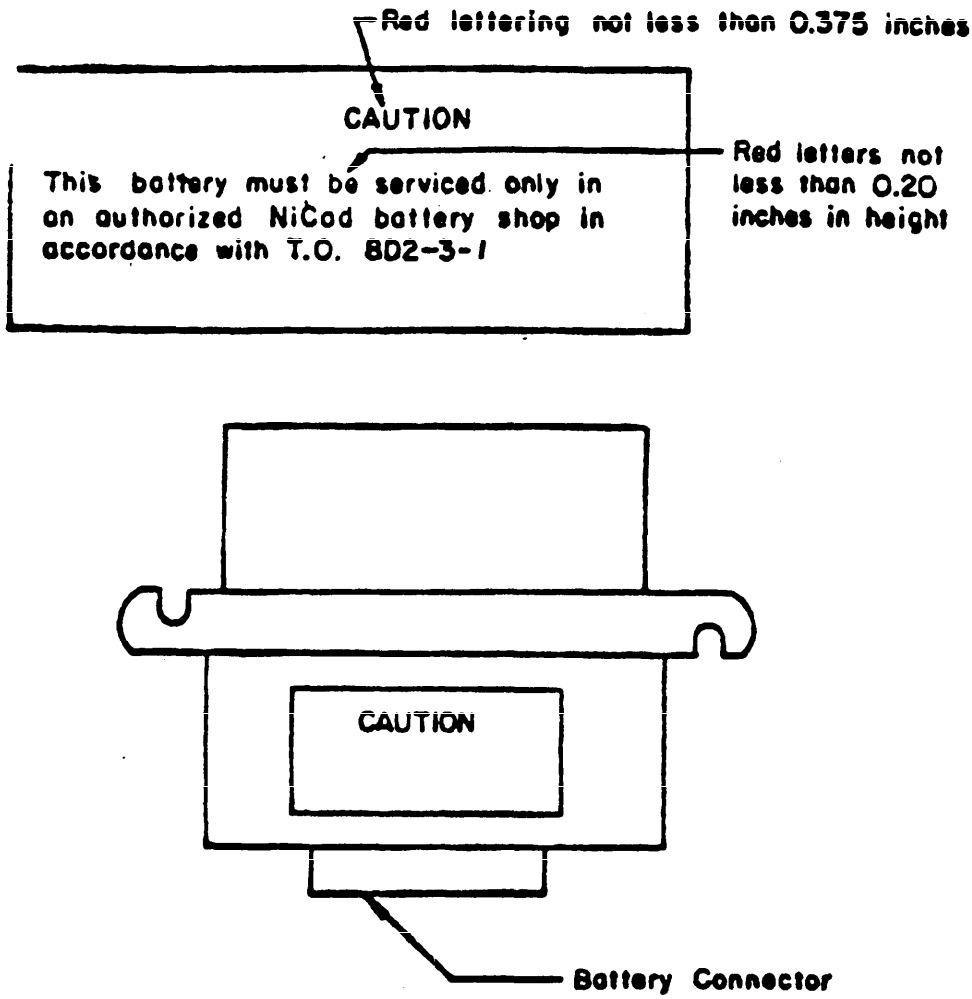

Figure 2. Caution Note Layout

4.3 Test conditions

*4.3.1 Retention of Charge. Conditions for the retention of charge test shall be as prescribed in Table 1 for cycle 201.

4.3.2 Capacity. The ampere-hour capacities shall be measured to the respective cutoff voltages for different rates and shall be not less than the capacities specified on the applicable standard.

4.4 Qualification testing

4.4.1 Qualification test sample. The qualification test samples shall consist of three batteries. Samples shall be identified with the manufacturer's own part number and any additional information required by the letter of authorization.

4.4.2 Qualification required. Prior to actual procurement, the product which this specification covers shall pass the qualification tests specified herein. If the product is later modified in any way, the modified form shall be subjected to and shall pass the same qualification tests.

4.4.3 Qualification tests. Qualification tests shall consist of all tests as specified herein and described under 4.6.

a. Samples No. 1 and 2 shall pass life test only (see 4.6.13)

b. Sample No. 3 shall pass all tests described under 4.6 except life and storage.

4.4.4 Qualification test report. After completion of the qualification tests, the vendor shall prepare a qualification test report in accordance with MIL-STD-831 and furnish three complete copies of the report to the Sacramento Air Logistics Center, ATTN: MEEI, McClellan AFB, California, 95652.

4.5 Acceptance tests. Acceptance tests shall consist of the following:

a. Individual tests

b. Sampling plan and tests

4.5.1 Individual tests. Each battery shall be subjected to the following test as described under 4.6:

a. Examination of product

b. Gastightness test

c. Cell capacity

4.5.2 Sampling plan and tests

4.5.2.1 Lot. A lot shall consist of batteries manufactured under essentially the same conditions and submitted for inspection at substantially the same time.

4.5.2.2 Sampling plan. Two batteries shall be selected at random from each lot of 250 or fraction thereof produced and subjected to the following tests as described under 4.6:

a. Strength of socket pins

b. Intercell connectors

c. Internal air pressure

d. Dielectric

4.5.2.2.1 Rejection and retest. When one or more items from the lot fail to meet the specification, acceptance of all items in the lot will be withheld until the extent and cause of failure are determined. The contractor shall explain fully to the Government representative the cause of failure and the action taken to preclude recurrence. After corrections have been made, all necessary tests shall be repeated.

4.5.2.2.2 Individual tests may continue. For production reasons, individual tests may be continued pending the investigation of a sampling test failure. But final acceptance of the entire lot shall not be made until it is determined that the lot meets all the requirements of the specification.

4.5.3 Defects in items already accepted. The investigation of a test failure could indicate that defects may exist in items already accepted. If so, the contractor shall fully advise the procuring activity of all defects likely to be found and methods of correcting them.

4.6 Test methods

4.6.1 Examination of product. Each battery shall be inspected to determine compliance with respect to material, workmanship, dimensions, and marking.

4.6.2 Strength of socket lock pins. A special grooved-steel shaft similar to the clamping shaft of the battery quick-disconnect plug conforming to MIL-C-18148 shall be so inserted in the receptacle socket that the socket pins are secured in the steel shaft. A tensional force of 600 lb shall be exerted against the socket pins. Following this test, the steel shaft shall be subjected to torsional force of 150 pound-inches. Any shear of the socket pins or loosening of the socket shall be cause for rejection.

4.6.3 Intercell connectors. Following a normal discharge at 1-hour rate, the battery shall be recharged at a constant potential of 28V for 3 hours, or until the battery temperature reaches 49°C, whichever occurs first. Immediately upon terminating this recharge, the battery shall be placed in a constant temperature oven adjusted to 49°C. After a period of 2 hours in the oven, the battery shall be discharged at 200 percent of the highest specified rate for 30 seconds. Any failure of the current-carrying parts during this discharge shall be cause for rejection.

4.6.4 Operating position. A normal discharge shall be made on the fully charged battery at the 5-minute rate at 27°C and to the corresponding cutoff voltage specified in the applicable military standard. After 2 minutes of discharge, the battery shall be inverted without interrupting the discharge, and after 2 additional minutes the battery shall be returned to the normal operating position. The voltage records shall include readings taken 5 seconds before and 5 seconds after each change in the position of the battery. The battery shall deliver full rated capacity in this discharge, and the voltage decline caused by the inversion shall not exceed 0.5V. There shall be no leakage of electrolyte when the battery is in any position.

*4.6.5 Internal air pressure. The cells shall be tested for an internal air pressure of 10 psig at 27°C for 5 minutes without leakage and shall be capable of withstanding an external air pressure of 13 psig for 5 minutes without leakage.

4.6.6 Thermal shock. The battery shall be fully charged and subject to the temperature shock test, procedure I, of MIL-E-5272. Visual inspection of the battery after this test shall show no failure of any part.

4.6.7 Vibration

4.6.7.1 Upon successful completion of the test for thermal shock, the battery shall be subjected to the vibration test, procedure XIII. of MIL-E-5272. Vibration tests at high and low temperatures as specified in MIL-E-5272 shall not be required. The option allowed by vibration tests, procedure XII of MIL-E-5272, shall not be applicable. The battery shall be mounted only in the normal upright position with the cover secured in place. During the vibration test, discharges at the 1-hour rate for periods of 30 seconds shall be made at frequent intervals. The current and voltage values observed during these discharges shall show no fluctuations, and visual inspection of the battery upon completion of the test shall show no mechanical failure.

4.6.7.2 Batteries incorporating an internal heater shall be stabilized and maintained at -1°±2°C. At the beginning of the vibration tests in each of the mutually perpendicular axes, the heater shall be energized with 115 ± 7 volts (RMS), 400 Hz power. The thermoswitches shall be monitored for contact interruption. Heater operation throughout the test shall be normal. Contact interruption shall constitute a failure.

4.6.7.2.1 Upon completion of the test, the battery shall be subjected to a dielectric and discharge test as follows:

a. Apply 2000 volts (RMS) at commercial frequency for 1 minute between battery current carrying parts and container.

b. Apply 1000 volts (RMS) at commercial frequency for 1 minute between heater terminals shorted together and battery negative terminal and container shorted together.

There shall be no arcing or breakdown during these tests. The battery, stabilized at -3°C shall then be capable of meeting a discharge rate of 18.2 amps at a time rate of 1 hour with a cutoff voltage not less than 18 volts.

4.6.8 Mechanical shock. The battery shall be subjected to the shock test, procedure V, of MIL-E-5272. All shock tests shall be made with the cover secured on the battery. The battery shall be discharging at the 1-hour rate, and the discharge voltage shall be recorded by a recording voltmeter, such as a brush recorder. During the period of each shock test, any discontinuity of the voltage or mechanical failure resulting from a shock in any direction shall be cause for rejection. The battery shall be mounted and shocked in a normal upright position, or 90° in any direction from the vertical, however, it shall not be mounted or shocked in the upside-down position.

4.6.9 Altitude. The battery shall be subjected to the altitude test, procedure II, MIL-E-5272. A fully charged battery shall be discharged at the 5-minute +27°C rate for 5 minutes, while the chamber is at approximately sea-level conditions. Immediately following the discharge, the pressure altitude and temperature should be varied to simulate 60,000 ft, and -10°C within 15 minutes and held at this condition for 2 hours and then reduced to sea level within 5 minutes. During this test the battery shall be charging at 28.5V constant potential. This cycle shall be repeated three times. Following this test the battery shall meet all the capacity requirements of the applicable Military Standard and visual inspection following this test shall show no mechanical or electrical failure or electrolyte leakage.

4.6.10 Dielectric. A potential of 2,500V (RMS) at commercial frequency shall be applied between current-carrying parts and the container for 1 minute. There shall be no breakdown of insulation during this test.

4.6.11 Operating temperature. A fully charged battery shall be discharged at the 1-hour rate 27°C, fully recharged and then placed in an oven and heated to 49°C. This temperature shall be maintained for 6 to 8 hours. The battery shall then be discharged in an ambient of 49°C at the 1-hour rate. The capacity for this discharge shall not be less than the capacity specified on applicable Military Standard at 27°C.

4.6.12 Temperature rise. A fully charged battery shall be heated in an oven until the battery temperature is stabilized at 60°C. At this temperature the battery shall be discharged at the 5-minute rate to the cutoff voltage. Immediately following this discharge, the battery shall be placed across a potential of 30.0V, and charged for a period of 2 hours. At the end of this period the temperature of the battery shall have ceased to rise and the battery shall not have sprayed or lost any of its electrolyte throughout the

charge. The battery shall then satisfactorily pass the 1-hour capacity test specified on the applicable Military Standard.

*4.6.13 Life. Where atmospheric temperatures are such that the ambients specified cannot be maintained, a water bath may be used, provided the temperature of the battery under test is maintained on cycle at the integrated average temperature for the battery when cycled in a free air ambient of 21°C to 32°C. Other than initial filling, water or electrolyte may be added not more than five times to the battery during this test. The quantity added and the cycle number shall be recorded in the test report.

TABLE I. Life Cycling Test

Cycle No.	Charge and Discharge Procedure
Initial	In accordance with manufacturer's instruction
Applicable Military Standard	Battery shall be subjected to and meet each test required by the Military Standard under the conditions specified therein.
1 thru 100	Automatic cycling at the 1-hour rate. 1/
Applicable Military Standard	Repeat Military Standard test requirements. Battery shall deliver 100 percent of the ampere-hour requirements specified for each test. 2/
101 thru 200	Automatic cycling at the 1-hour rate. 1/
Applicable Military Standard	Repeat all MS test requirements. Battery shall deliver 95% of the ampere-hour requirements specified for each test. 2/
201	Each battery subjected to life test, after being charged, shall stand on open circuit for 14 days in an ambient temperature of 21°C to 30°C. The battery shall then deliver not less than 80% of the ampere-hour capacity specified on the applicable MS at the 2-hour rate.

1/ Capacity restoration cycles are permissible at intervals of not less than 25 cycles. Each capacity restoration cycle shall be recorded in the test report.

2/ Because of the inherent increase in carbonate of the electrolyte in vented-type cells it is permissible to replace the electrolyte in order to meet the low temperature - high rate discharge requirements. Replacement of the electrolyte shall be recorded in the test report. High rate discharge tests shall be performed and data recorded prior to replacement of the electrolyte and after replacement (if required) of the electrolyte.

*4.6.13.1 Cycling. Cycling shall consist of a series of charges and discharges as specified in Table I. A minimum of three cycles at the 1-hour rate shall be run in a 24-hour period. If the battery fails to meet the capacity requirements of Table I, as many as four repeat tests shall be permitted to demonstrate conformance to the capacity requirements specified in the applicable Military Standard. Repeat tests shall not be counted as life cycles. Charge conditions for repeat test shall be at the discretion of the manufacturer and shall be recorded in the test report. The number of repeat tests and the life cycle number where the repeat test occurred shall also be recorded in the test report.

4.6.13.2 Capacity range. Unless otherwise specified, capacity tests at the 2-hour and 1-hour rates shall be run at an initial temperature between 24° and 30°C. Any deviation from 27°C, the standard initial temperature, shall be compensated by increasing the observed capacity 0.7 percent per degree centigrade when below 27°C, and subtracting a like amount when above 27°C. The 5-minute 27°C rate shall be run at an initial temperature of 27°±1°C, and no correction factor shall be employed. The low-temperature rate test shall be conducted at the time rate and minimum temperature specified on the applicable Military Standard ±1°C after the battery has been conditioned for a minimum of 24 hours at this temperature.

4.6.13.3 Charging. Charges for capacity determination or retention of charge and every first charge of a series of automatic cycles at the 1-hour rate shall be made utilizing the starting rate to provide 90 percent of the previous discharge and the finishing rate to provide 30 percent of the previous discharge, thus making a total of 120 percent of the previous discharge. At the manufacturer's request the finishing rate may be continued to provide 40 percent of the previous discharge, thus making 130 percent recharge.

*4.6.13.3.1 For all automatic cycles of 1-hour discharge at the 1-hour rate, except the first one of each series (see 4.6.13.3), the batteries shall be charged at the starting rate providing 90 percent of previous discharge and at the finishing rate providing an additional 20 percent, thus making a total charge of 110 percent; or, at the manufacturer's request, by constant potential charging at 28 ±0.5V for 4 hours. The batteries may stand on open circuit prior to discharge in order to make the period 6 hours.

4.6.13.3.2 Charging may be accomplished by either the constant-current method or the fixed-resistor method. If the fixed-resistor method is used, the average charging rates shall be the starting and finishing rates specified in the applicable Military Standards and the rate at the end of each charging period shall be not less than 75 percent of the applicable specified rate.

4.6.13.3.3 All automatic cycling discharges shall be terminated at 1 hour; those for capacity determination shall be continued to the specified cutoff voltages.

4.6.13.3.4 Batteries standing idle for a period in excess of 12 hours may be given a booster charge not to exceed 2 ampere-hours for each 24 hours or fraction thereof that the battery has been idle.

4.6.14 Gastightness test. The battery with the cover secured in place shall be subjected to a gastightness test by connecting the vent nozzles through a manometer to a pressure equivalent to 55 inches of water. Any change in pressure equivalent to or greater than 2.75 inches of water during a 2-minute period shall be cause for rejection of the battery.

4.6.15 Cell capacity. Each cell shall be subjected to a 16-hour charging cycle at the 10-hour rate and 27°C ambient temperature followed by a 1-hour open circuit period. Immediately following the open circuit period, the cell shall be discharged at the 2-hour rate to a cut off voltage of 1.0 volt. The capacity of the cell shall be within the range specified on the applicable Military Standard.

4.6.16 Internally heated batteries

4.6.16.1 Heater performance. The battery shall be tested as follows:

a. Stabilize the battery temperature at a -54°C and monitor temperatures in the following areas throughout the test; battery heater, surface of battery cells where they are in contact or adjacent to the heater, and battery cell link temperatures (at least five places, four near the outside of the battery and one in the center).

b. Maintain the ambient temperature at a -54°C and energize the battery heater with 110V (rms), 400 Hz AC power. After 60 minutes turn off the battery heater and discharge the battery at 82 percent of the 1-hour discharge rate. The battery terminal voltage shall remain above 18 volts for a minimum of 60 minutes.

c. Repeat steps a. and b. above except turn off the battery heater after 3 hours of operation and discharge the battery at 82 percent of the 1-hour discharge rate. The battery terminal voltage shall remain above 18 volts for a minimum of 80 minutes.

d. Stabilize the battery temperature at -54°C. Maintain the ambient temperature at a -54°C and energize the battery heater with 121V (rms), 400 Hz AC power until all temperatures have stabilized or are cycling around a constant temperature. The maximum heater surface hot spot temperature shall not exceed 113°C at any time. The interconnecting cell link temperatures shall not exceed 27°C at any time. After 4 hours of heater operation, the following conditions shall exist; maximum heater surface hot spot temperature shall not exceed 82°C, and the average temperature of this hot spot shall not exceed 57°C. This average shall be obtained by averaging temperature readings taken at 5-minute intervals over a 1-hour period. The five interconnecting cell link temperatures shall have stabilized between -1°C and 21°C and maximum temperature difference between cell link temperatures shall not exceed 14°C.

e. Stabilize the battery temperature at 14° ± 1°C. Both heater thermoswitches shall be open.

4.6.16.2 Heater life. The battery heater shall be tested for 500 hours endurance under the following conditions:

a. Remove battery cells and short out or bypass the two thermoswitches.

b. Cycle the heater input power by applying 121V (RMS) 400 Hz AC for 30 ± 20 seconds every 5 ± 1 minute. The ambient temperature shall be so controlled that the average heater temperature equals or exceeds the maximum heater temperature observed during the heater performance test (4.6.17.1). At the end of 250 hours and just prior to 500 hours, step the applied voltage to 190 volts, RMS, for 0.1 second.

c. At completion of the 500 hours the heater shall be examined for any deterioration or damage. The battery cells shall be replaced and an insulation test conducted by applying 1000 volts (RMS), 60 Hz, for 1 minute between the heater connector pins shorted together and the battery negative terminal and case shorted together. No excessive leakage, arcing, or breakdown shall occur.

4.6.16.3 Thermoswitch cycling test

4.6.16.3.1 The switch shall be located in a circuit with series resistance sufficient to allow maximum rated heater current with 121 volts AC (RMS) 400 Hz applied. The thermoswitch temperature shall be decreased until the contacts close and then increased until they open; this constitutes one cycle. The thermoswitch shall be subjected to 50,000 cycles of operation without failure. The temperature at which the thermoswitches open and close shall be noted at the beginning of the test and at the completion of 50,000 cycles of operation; the operating points shall not have changed more than ±3°C. If certified test data is available on the thermoswitches used, it will be acceptable provided the test requirements equaled or exceeded those given above.

4.6.16.3.2 The requirements of 4.6.17.3.1 shall be repeated using the same load resistance value except with 205V (RMS) 400 Hz applied. The switch shall operate satisfactorily for 20 complete cycles. This test and the 50,000-cycle test do not need to be conducted on the same switch.

4.6.17 Float charge test. A fully charged battery, with cover secured in place, and the electrolyte at the correct level, shall be temperature stabilized at 49°C. With the ambient maintained at 49°C and a minimum amount of air flow around the battery, the battery shall be placed on charge at 28.5 volts for 50 hours. During this period, no water shall be added to the battery, the battery shall not spray nor lose electrolyte, except water in the form of gases, the charging current shall not exceed 4 amperes after the first 2 hours, and the battery cell link temperatures shall not exceed 71°C.

4.6.18 Explosive atmosphere

4.6.18.1 A fully charged battery, with cover secured in place and initially stabilized at 71°C shall be placed in an explosion test chamber. The ambient air within the chamber shall be static (circulating blowers not operating). The battery shall be charged at 28.5 volts until the current levels off (0.5 ampere or less in a 5-minute period) and then increased to 10 amperes rate for a period of 10 minutes. Immediately following (within 30 seconds) the battery terminals shall be short circuited through an external load of 0.001 ohm maximum for 10 seconds. An explosion during this test shall constitute a failure.

4.6.18.2 Batteries incorporating heater elements shall be subjected to the test in 4.6.19.1 and the following: The battery with cover secured in place and initially stabilized at -7°C shall be placed in an explosion test chamber. The ambient air within the chamber shall be static (circulating blowers not operating). The battery shall be charged at 28.5 volts until the current levels off (0.5 ampere or less in a 5-minute period) and then increased to 8 amperes rate for the remainder of the test. At the initiation of the 8-ampere charging rate, the battery heater shall be energized with 115 ± 3 volts, 400 Hz, and the test continued until the heater thermoswitches cycle not less than 4 times or the battery cell links attain a temperature of 10°C. An explosion during this test shall constitute a failure.

4.6.19 Humidity

4.6.19.1 The battery shall be subjected to the humidity test, procedure I, of MIL-E-5272. The test shall be performed with the cover secured on the battery. The axis of the air inlet and air outlet vents shall be parallel with the chamber air flow. After completion of the test period, accumulated water may be removed from the battery. Within 1 hour 1000 volts (RMS) commercial frequency shall be applied between current-carrying parts and container for 1 minute. There shall be no breakdown of insulation during this test.

4.6.19.2 Batteries incorporating internal heater elements shall be subjected to the test of 4.6.20.1 and the following: One thousand (1000) volts (RMS) commercial frequency shall be applied for 1 minute between the heater connector terminals shorted together and the battery negative terminal and container shorted together. There shall be no arcing or breakdown of insulation during this test. Immediately after this test, the battery shall be placed in a -15°±3°C ambient temperature until the battery cell link temperatures reach -1°C or lower. With the ambient maintained at -15°±3°C; 121 volts (RMS) 400 Hz AC power shall be applied to the heater until the thermoswitches cycle not less than 4 times. Heater and cell link temperature and heater current shall be recorded. Heater current shall not exceed 4 amperes and heater surface temperature shall not exceed 113°C.

5. PREPARATION FOR DELIVERY

5.1 Preservation, packaging, and packing. Preservation, packaging, and packing shall be in accordance with MIL-P-6063. (see para 6.2d)

5.2 Marking of shipments. Interior packages and exterior shipping containers shall be marked in accordance with MIL-STD-129. The nomenclature shall be the approved NS standard title as applicable.

6. NOTES

6.1 Intended use. The batteries covered by this specification are intended for continuous duty in electrical systems of aircraft.

6.2 Ordering data. Procurement documents should specify the following:

a. Title, number, and date of this specification

* b. Internal heating, if required

c. That the contractor furnish and pack with each battery one printed copy of instructions covering the servicing of the battery. Prior to printing, two copies of proposed instructions should be furnished to the procuring activity for approval. Instruction should be printed on white paper 8 1/2 by 11 inches.

d. Selection of applicable levels of preservation and packaging, and packing.

6.3 Definitions

6.3.1 Battery capacity. Battery capacity is the discharge measured quantitatively in ampere-hours at the specified discharge rate.

6.3.2 Average final voltage. The average final voltage is the voltage measured across the battery terminals, after discharging for the time specified at the discharge rate specified, divided by the number of cells across which the voltage measurement is made.

6.3.3 Cutoff voltage. The cutoff voltage is that specified for each rate on the applicable NS standard. (For example, the cutoff voltage for the 1-hour rate is 18.0V.)

6.3.4 Constant-current discharge. The constant-current discharge is the discharge made at the rate and for the time specified, or until the final voltage reaches the specified cutoff value.

*6.4 Qualification. With respect to products requiring qualification, awards will be made only for such products as have, prior to the time set for opening of bids, been tested and approved for inclusion in the applicable Qualified Products List whether or not such products have actually been so listed by that date. The attention of the suppliers is called to this requirement, and manufacturers are urged to have the products that they propose to offer to the Federal Government tested for qualification in order that they may be eligible to be awarded contracts or orders for the products covered by this specification. The activity responsible for theQualified Products List is

Sacramento ALC/MMEM McClellan AFB CA 95652, and information pertaining to qualification of products may be obtained from that activity.

6.5 The margins of this specification are marked with an asterisk to indicate where changes (additions, modifications, corrections, deletions) from the previous issue were made. This was done as a convenience only, and the Government assumes no liability whatsoever for any inaccuracies in these notations. Bidders and contractors are cautioned to evaluate the requirements of this document based on the entire content irrespective of the marginal notations and relationship to the last previous issue.

Custodian:
Air Force - 80

Preparing Activity:
Air Force - 80

Reviewer:
Air Force - 11

Project No. 6140-0381

Review/user information is current as of the date of this document. For future coordination of changes to this document, draft circulation should be based on the information in the current Federal Supply Classification Listing of DOD Standardization Documents.

STANDARDIZATION DOCUMENT IMPROVEMENT PROPOSAL

OMB Approval
No. 22-R255

INSTRUCTIONS: The purpose of this form is to solicit beneficial comments which will help achieve procurement of suitable products at reasonable cost and minimum delay, or will otherwise enhance use of the document. DoD contractors, government activities, or manufacturers/vendors who are prospective suppliers of the product are invited to submit comments to the government. Fold on lines on reverse side, staple in corner, and send to preparing activity. Comments submitted on this form do not constitute or imply authorization to waive any portion of the referenced document(s) or to amend contractual requirements. Attach any pertinent data which may be of use in improving this document. If there are additional papers, attach to form and place both in an envelope addressed to preparing activity.

DOCUMENT IDENTIFIER AND TITLE

NAME OF ORGANIZATION AND ADDRESS

CONTRACT NUMBER

MATERIAL PROCURED UNDER A

☐ DIRECT GOVERNMENT CONTRACT ☐ SUBCONTRACT

1. HAS ANY PART OF THE DOCUMENT CREATED PROBLEMS OR REQUIRED INTERPRETATION IN PROCUREMENT USE?
   A. GIVE PARAGRAPH NUMBER AND WORDING.

   B. RECOMMENDATIONS FOR CORRECTING THE DEFICIENCIES

2. COMMENTS ON ANY DOCUMENT REQUIREMENT CONSIDERED TOO RIGID

3. IS THE DOCUMENT RESTRICTIVE?

   ☐ YES ☐ NO *(If "Yes", in what way?)*

4. REMARKS

SUBMITTED BY *(Printed or typed name and address - Optional)*

TELEPHONE NO.

DATE

DD FORM 1 JAN 72 1426

REPLACES EDITION OF 1 JAN 66 WHICH MAY BE USED

S/N 0102-014-1802

FOLD

POSTAGE AND FEES PAID

OFFICIAL BUSINESS
PENALTY FOR PRIVATE USE $300

SMAMA (MMSS)
McClellan AFB CA 95652

FOLD