Downloaded from http://www.everyspec.com

INCH-POUND

MIL-B-20289D(MC)
10 SEPTEMBER 1990
SUPERSEDING
MIL-B-20289C(MC)
19 August 1982

MILITARY SPECIFICATION

BUTTONS, INSIGNIA, PLASTIC

This specification is approved for use by the U. S. Marine Corps, Department of the Navy, and is available for use by all Departments and Agencies of the Department of Defense.

1. SCOPE

1.1 Scope. This specification covers the requirements for plastic insignia buttons.

1.2 Classification. The buttons shall be of the following types, classes, and sizes, as specified (see 6.2). Button sizes shall be in U. S. "Lines" as shown below. One "line" equals one-fortieth of an inch.

Type I - Regular Shank
- Class 1 - Hard Soldered Construction
- Class 2 - Swedge Construction

Type II - Short Shank
- Class 1 - Hard Soldered Construction
- Class 2 - Swedge Construction

Sizes (Line)
27
40

Beneficial comments (recommendations, additions, deletions) and any pertinent data which may be of use in improving this document should be addressed to the Commanding General (PSE-C), Marine Corps Research, Development, and Acquisition Command, Washington, DC 20380, by using the self-addressed Standardization Document Improvement Proposal (DD Form 1426) appearing at the end of this document or by letter.

AMSC-NA FSC 8455

DISTRIBUTION STATEMENT A. Approved for public release; distribution is unlimited.

Downloaded from http://www.everyspec.com

2. APPLICABLE DOCUMENTS

2.1 Government documents.

2.1.1 Specifications, standards and handbooks. The following specifications and standards form a part of this document to the extent specified herein. Unless otherwise specified, the issues of these documents are those listed in the issue of the Department of Defense Index of Specifications and Standards (DODISS) and supplement thereto, cited in the solicitation.

SPECIFICATIONS

FEDERAL

PPP-B-636 - Boxes, Shipping, Fiberboard
PPP-B-676 - Boxes Setup

STANDARDS

FEDERAL

FED-STD-151 - Metals: Test Methods
FED-STD-406 - Plastics: Methods of Testing

MILITARY

MIL-STD-105 - Sampling Procedures and Tables for Inspection By Attributes
MIL-STD-129 - Marking for Shipment and Storage

(Unless otherwise indicated, copies of federal and military specifications, standards and handbooks are available from the Standardization Documents Order Desk, Building 4D, 700 Robbins Avenue, Philadelphia, PA 19111-5094.

2.1.2 Other Government publications. The following other Government publication forms a part of this document to the extent specified herein. Unless otherwise specified, the issue is that cited in the solicitation.

LAWS AND REGULATIONS

U. S. Postal Service Manual

(Application for copies of the manual should be addressed to the Superintendent of Documents, U. S. Government Printing Office, Washington, DC 20402.)

Downloaded from http://www.everyspec.com

2.2 Non-Government publications. The following documents form a part of this document to the extent specified herein. Unless otherwise specified, the issues of the documents which are DoD adopted are those listed in the issue of the DODISS cited in the solicitation. Unless otherwise specified, the issues of documents not listed in the DODISS are the issues of the documents cited in the solicitation.

UNIFORM CLASSIFICATION COMMITTEE

Uniform Freight Classification Rules

(Application for copies should be addressed to the Uniform Classification Committee, Room 1106, 222 South Riverside Plaza, Chicago, IL 60606.)

NATIONAL MOTOR FREIGHT TRAFFIC ASSOCIATION, INC.

National Motor Freight Classification

(Application for copies should be addressed to the American Trucking Association, Inc., ATTN: Tariff Order Section, 1616 P Street, N.W., Washington, DC 20036.)

(Industry association specifications and standards are generally available for reference from libraries. They are also distributed among technical groups and using Federal agencies.)

2.3 Order of precedence. In the event of a conflict between the text of this document and the references cited herein, the text of this document takes precedence. Nothing in this document, however, supersedes applicable laws and regulations unless a specific exemption has been obtained.

3. REQUIREMENTS

3.1 Standard sample. Standard samples are furnished solely for guidance and information to the contractor (see 6.4). Variations from this specification may appear in the sample, in which case the specification shall govern.

3.2 First article. When specified (see 6.2), the contractor shall furnish a sample unit for first article inspection and approval (see 4.4 and 6.3).

Downloaded from http://www.everyspec.com

3.3 Material.

3.3.1 Body. The body shall be molded from thermosetting melamine formaldehyde plastic of a quality to meet the requirements of this specification.

3.3.1.1 Color and finish. The color shall be black shade BT, cable 62001, to match the approved color standard (see 6.4). The buttons shall have a nonglossy finish and shall show good fastness to light when tested in accordance with 4.6.1.

3.3.2 Shank and shank plate. The shank and shank plate shall be made of low or red brass.

3.3.3 Bodkin fastener. When specified (see 6.2), each button shall be furnished with a bodkin fastener, permanently attached through the eye of the shank. The bodkin fastener shall be made from hard drawn nickel silver wire with nickel plated brass cap and shall conform to the applicable design and dimensions shown on figure 1.

3.3.4 Toggles, ring. When specified (see 6.2), ring toggles shall be furnished detached. The ring toggles shall be made from hard-drawn steel wire, zinc coated to withstand salt spray test specified in 4.6.6 for a period of 96 hours without indication of red rust. Ring toggles shall conform to the applicable design and dimensions shown on figure 1.

3.4 Design. Buttons shall be ornamental, shank type, with the regulation Marine Corps eagle and anchor design sharply produced upon a convex face.

3.5 Molds. Production molds shall be made from hubs furnished to the contractor by the Government. Molds shall produce true impressions of the standard hubs.

3.5.1 Care of Government property. Hubs furnished to the contractor shall remain the property of the Government and the contractor shall be held responsible for their condition. Hubs shall not be altered or damaged in any manner. Upon completion of the contract, or when requested, the hubs shall be returned as directed by the contracting officer.

3.6 Construction.

3.6.1 Body. The plastic body shall be molded from the material specified in 3.3.1 and shall conform to the design, shape and size required by the Government furnished hubs. The plastic body shall withstand the curing test (4.6.2) without showing more than moderate loss in luster or more than slight

Downloaded from http://www.everyspec.com

evidence of chalking; shall finish the size specified with a plus or minus tolerance of one line (4.6.3) permitted; and shall withstand compression test (4.6.4) as follows:

Size	Pounds (average of 5 determinations)
27-line	300
40-line	500

NOTE: Slight evidence of chalking is a change which is perceptible with difficulty. Moderate loss in luster is one which is readily perceptible without close examination but is insufficient to markedly alter the original appearance of the sample.

3.6.2 Thickness. The overall thickness of the finished body shall be as follows:

Size	Thickness (lines)
27-line	8 ± 1/2
40-line	11 ± 1

3.6.3 Shank and shank plate. The shank and shank plate shall be made of brass specified in 3.3.2 and shall have a bright finish. The type I shank shall be shaped into a well-formed eye. Type II shank shall be formed with a flat top. Both types shall be hard soldered or swedged (6.5) to the inside of the shank plate as shown on figures 1 through 4. The shank and shank plate shall be securely molded into the body, properly centered on the back. When tested in accordance with 4.6.5, the shank shall withstand separation from the body at an average of 50 pounds. The position of the shank in relation to the design on the face of the body shall be such that if a rod is inserted in the eye of the shank, the rod shall be parallel with the vertical axis of the 40-line buttons, and parallel with the horizontal axis of the 27-line buttons. A variation of 10 degrees is permitted. Finished dimensions of the shank and shank plate shall be as shown on figures 1 through 4.

3.7 Workmanship. The finished buttons shall be accurately made in conformance with this specification, and shall be clean, well finished, and free from cracks, sharp or uneven edges, or any defects which might affect appearance or serviceability.

4. QUALITY ASSURANCE PROVISIONS

4.1 Responsibility for inspection. Unless otherwise specified in the contract or purchase order, the contractor is responsible for the performance of all inspection requirements

Downloaded from http://www.everyspec.com

(examinations and tests) as specified herein. Except as otherwise specified in the contract or purchase order, the contractor may use his own or any other facilities suitable for the performance of the inspection requirements specified herein, unless disapproved by the Government. The Government reserves the right to perform any of the inspections set forth in this specification where such inspections are deemed necessary to ensure supplies and services conform to prescribed requirements.

4.1.1 Responsibility for compliance. All items must meet all requirements of sections 3 and 5. The inspection set forth in this specification shall become a part of the contractor's overall inspection system or quality program. The absence of any inspection requirements in the specification shall not relieve the contractor of the responsibility of ensuring that all products or supplies submitted to the Government for acceptance comply with all requirements of the contract. Sampling inspection, as part of manufacturing operations, is an acceptable practice to ascertain conformance to requirements. This does not authorize submission of known defective material,either indicated or actual, nor does it commit the Government to accept defective material.

4.1.2 Certificate of compliance. Where certificates of compliance are submitted, the government reserves the right to check test such items to determine the validity of the certification.

4.2 Classification of inspection. The inspection requirements specified herein are classified as follows:

a. First article inspection (see 4.4).
b. Quality conformance inspection (see 4.5).

4.3 Inspection conditions. When specified in the contract or purchase order, all inspections shall be in accordance with the provisions set forth in MIL-STD-105.

4.4 First article inspection. When specified in the contract or purchase order, first article inspection shall be made of completed fabricated buttons (see 3.2) for conformance to this specification.

4.5 Quality conformance inspection.

4.5.1 Testing of components. Testing of components shall be in accordance with the applicable specifications to the extent applicable, except that this specification shall govern in the event of conflict. The method of testing shall be as specified in FED-STD-151 and FED-STD-406 as applicable.

Downloaded from http://www.everyspec.com

4.5.2 In-process inspection. Inspections shall be performed during the manufacturing processes to determine whether operations or assemblies are performed as specified herein. The Government reserves the right to determine the acceptability of construction methods not performed in accordance with specified requirements for operations or subassemblies.

4.5.2.1 Examination of end item. The end item shall be examined for defects listed in 4.5.3.1 and 4.5.3.2. The lot size shall be expressed in units of two buttons of each type, class, and size. The inspection level shall be I (see 6.5).

4.5.2.2 General defects. General defects shall be classified as follows:

Examine	Defect	Classification Major	Minor A	Minor B
Color and finish	a. Does not compare favorably with the standard or approved sample.	101		
	b. Shank or shank plate does not have bright finish.			301
	c. Stains, spots, foreign matter, or segregations.		201	
Design	a. Construction or design does not conform to Government hub or approved sample.	102		
	b. Any significant detail altered, struck over, marred, missing, reduced, or obliterated.	103		
	c. Warped, twisted, or distorted.		202	
Type	a. Shank or shank plate is not of the shape or type specified.	104		
Workmanship: button body	a. Nicked, gouged, cracked, scratched, dented, disfigured, malformed, or otherwise impaired	105		

Downloaded from http://www.everyspec.com

Examine	Defect	Classification Major	Minor A	Minor B
	b. Surface is not smooth where required, e.g., is pitted, porous, or chipped.		203	
	c. Overlap of plastic on shank plate not to exceed 25% around edge perimeter.		204	
	d. Fins of sharp or uneven edges.		205	
Shank and shank plate	a. Missing.	106		
	b. Malformed, deformed, bent out of shape, twisted, or otherwise impaired.	107		
	c. Burr, fin, sliver, or sharp edge		206	
Toggle, ring, and bodkin fastener	a. Not type specified.	108		
	b. Cap missing or not attached to button.	109		
	c. Cap loose, deformed, bent, twisted, or otherwise damaged, affecting serviceability.	110		
	d. Sharp edge, fin, or burr.		207	
Assembly	a. Shank or shank plate not regidly and securely molded into the body of the button.	111		
	b. Shank is loose or wobbles in shank plate (has not been adequately soldered or swedged, as applicable).	112		

Downloaded from http://www.everyspec.com

Examine	Defect	Classification Major	Minor A	Minor B
	c. Shank plate not centered on back of button body.		208	
	d. Shank not centered in shank plate; shank not positioned as specified, i,e., when a rod is inserted in the eye of the shank, the rod is not parallel with the vertical axis of the 40-line and 45-line buttons or is not parallel with the horizontal axis of the 27-line button.	113		
	e. Not clean, e.g., solder spatter affecting use.		209	

4.5.3 Examination of buttons for defects in dimensions. Any dimension that is not within the specified tolerances shall be classified as a defect. The inspection level shall be S-1 (see 6.5).

4.5.4 Testing of end item. Testing of completely fabricated buttons shall be performed in accordance with Table I tests for the characteristics shown therein. The number of determinations per sample unit shall be two.

4.5.5 Examination for preparation of delivery requirements. An examination shall be made to determine that packaging, packing, and marking requirements of section 5 of this specification are complied with. Defects shall be scored in accordance with the list below. The sample unit shall be one shipping container fully prepared for delivery with the exception that it need not be sealed. Defects of closure listed below shall be examined on shipping containers fully prepared for delivery. The lot size shall be the number of shipping containers in the end item inspection lot. The inspection level shall be S-1 (see 6.5).

EXAMINE	DEFECT
Marking (exterior and interior)	Omitted; incorrect; illegible; or of improper size, location, sequence, or method of application. Size or stock

Downloaded from http://www.everyspec.com

	number of end item does not correspond to size or stock number marking of intermediate and/or shipping container.
Materials	Any component missing. Any compound damaged, affecting serviceability.
Workmanship	Inadequate application of components, such as incomplete closure of case liners, container flaps, loose strapping, or inadequate stapling. Bulging or distortion of containers.
Weight or content	Number of intermediate packages is more or less than required; gross/net weight exceeds requirements.

4.5.5.1 Examination for count of buttons in intermediate containers. Buttons packaged for shipment shall be examined to determine conformance with package marking and specified quantity. The lot size shall be the number of intermediate containers.

4.6 Tests.

4.6.1 Colorfastness to light. The colorfastness to light shall be determined by test method 6031 of FED-STD-406, except that the specimen shall be the finished button and the time element shall be 20 hours.

4.6.2 Curing test. Buttons shall be immersed in a boiling solution of 0.8 percent by weight sulfuric acid for 10 minutes and immediately thereafter rinsed in water, wiped dry and examined. The examination for chalking and loss in luster shall be made by holding the buttons at arm's length and examining them under a strong white light.

4.6.3 Size test. The diameter of the buttons measured in lines shall denote the size. The standard United States button line measure, in which one line is equal to 1/40 inch, shall be used for both size and thickness.

4.6.4 Compression strength. Compression strength of the buttons shall be conducted using apparatus which permits gradual application of the load either manually or automatically. The load indicating mechanism shall be capable of showing the total compression load carried by the button; however, the gage should be so calibrated that the load deflection at the point of button failure should be at least 1/3 of the total capacity of the gage.

TABLE 1. Tests.

Characteristic	Rqmt Para.	Test Method	Rqmt Appl to Ind Unit	Rqmt Appl to Lot Avg	#Determ Per Smpl Unit	Results Reported As
Colorfastness	3.3.1.1	4.6.1	X		1	When a standard sample has been established - "Satisfactory" or "Unsatisfactory" When no standard sample has been established - "Excellent", "Good", "Fair", or "Poor"
Curing test	3.6.1	4.6.2	X		1	Pass or Fail
Compression strength test	3.6.1	4.6.4		X	Avg of 5	To nearest pound
Shank pull test	3.6.3	4.6.5		X	Avg of 5	To nearest 0.1 lb.
Toggle, ring	3.3.4	4.6.6	X		1	Pass or fail

Downloaded from http://www.everyspec.com

Source: https://assist.dla.mil -- Downloaded: 2016-05-14T13:27Z
Check the source to verify that this is the current version before use.

Downloaded from http://www.everyspec.com

Buttons should be placed face up on a rimmed circular hole of sufficient depth to accommodate the button shank. The hole diameter shall be 0.43 - 0.44 inch (7/16") for 40-line and 45-line buttons and 0.25 inch (1/4") for 27-line buttons. The rim shall be approximately 0.125 inch in height and its inside diameter such that the button fits with a small amount of "play". All horizontal surfaces shall be parallel. The button face shall be located under suitable metal surface parallel to the block face (i.e., compression head or press platen) and tested to failure. Failure is defined as the first sign of a crack in the button visible to the naked eye (a visible crack is usually signified by a discernably audible internal rupture). In addition, superficial chipping or crumbling of the surface of the raised insignia shall not exceed 0.050 inches per minute. The load in pounds which produces this failure shall be taken as the compression strength of the buttons. The results for the series of buttons tested shall be averaged for determination of conformance to the specification requirement.

4.6.5 Shank pull-strength test. The buttons shall be mounted in a suitable shaped jig having a hole of proper size to clear the shank anchorage but capable of holding the body of the button. The jig then shall be clamped in one of the jaws of a pendulum (inclined balance) type of tensile testing machine. A heavy wire shall be inserted in the eye of the shank and shall be clamped in the other jaw of the machine. The jaw at which the load is applied shall move at a uniform rate of 12 inches plus or minus 2 inches per minute under no load. Five buttons shall be tested and the average result reported.

4.6.6 Salt spray test. The salt spray test shall be in accordance with method 811 of FED-STD-151 to determineconformance with 3.3.4.

5. PACKAGING

5.1 Packaging. Packaging shall be level A or commercial as specified (see 6.2).

5.1.1 Level A. Two gross (288) plastic insignia buttons, of one type, class, and size shall be bulk packaged in a set-up paperboard box conforming to type I, variety 1, class A, Style 4 of PPP-B-676, assembled and closed as specified in the appendix thereto.

5.1.2 Commercial. Two gross (288) plastic insignia buttons, of one type, class, and size shall be packaged in accordance with the contractor's normal practice.

Downloaded from http://www.everyspec.com

5.2 Packing. Packing shall be level B or commercial, as specified (see 6.2).

5.2.1 Level B. Plastic insignia buttons of one type, class, and size packaged as specified in 5.1, shall be packed within a fiberboard shipping container conforming to type CF or SF, class-domestic, variety SW, grade 275, style CSSC of PPP-B-636 assembled, closed and reinforced as speified in the appendix thereto.

5.2.2 Commercial. Plastic insignia buttons of one type, class, and size shall be packed in a manner to insure carrier acceptance and safe delivery at destination. Containers shall be in accordance with the U.S. Postal Service Manual, Uniform Freight Classification, or National Motor Freight Classification, as applicable.

5.3 Marking. In addition to any special marking required by the contract or order, the shipping containers shall be marked in accordance with the requirements of MIL-STD-129.

6. NOTES

(This section contains information of a general or explanatory nature that may be helpful, but is not mandatory.)

6.1 Intended use. Plastic insignia buttons described herein are intended for use on certain Marine Corps uniform items.

6.2 Acquisition requirements. Acquisition documents must specify the following:

a. Title, number, and date of the specification.
b. Issue of DODISS to be cited in the solicitation, and if required, the specific issue of individual documents referenced (see 2.1).
c. Type, class, and size required (see 1.2).
d. Whether first article is required (3.2).
e. Whether bodkin fasteners are required (3.3.3).
f. Whether ring toggles are required (see 3.3.4).
g. Level of packaging and packing required (5.1 and 5.2).

6.3 First article. When a first article is required, it shall be inspected and approved under the appropriate provisions of FAR 52.209 and the requirements of this specification. The sample(s) taken from the first lot depending on the contractors history and will be as directed by the Contracting Officer. The Contracting Officer should include specific instructions in all

Downloaded from http://www.everyspec.com

acquisition instruments regarding arrangements for selection, inspection, and approval of the first article.

6.4 Standard Sample and shade samples. For information regarding the availability of samples of the button and the standard shade specified, address inquiry to the procuring activity issuing the invitation for bids. (see 3.1 and 3.3.1.1)

6.5 Acceptance criteria. The acceptance criteria below are recommended for use. The acceptance criteria as specified in the contract or purchase order shall be binding. Unless otherwise specified, the following acceptance criteria are in accordance with MIL-STD-105.

6.5.1 For end item visual examination. An acceptance quality level (AQL), expressed in terms of defects per hundred units, of 4.0 for major defects and 10.0 for total (major and minor combined) defects is recommended.

6.5.2 For end item dimensional examination. An AQL, expressed in terms of defects per hundred units, of 4.0 is recommended.

6.5.3 For packing and count examination. An AQL, expressed in terms of defects per hundred units, of 2.5 is recommended.

6.6 Subject term (keyword) listing.
Coat
Marine Corps
Uniform

6.7 Figures. Figures 1 through 4 show general design of the button with assembly details and measurements. In the event of conflict between these figures and the text of this specification, the text of this specification shall govern.

6.8 Manufacturer's data. Waterbury Companies, Inc. Part No. 01-00705-15, or equal, has been found to be acceptable for the swedge type construction specified in 3.6.3.

6.9 Changes from previous issue. Marginal notations are not used in this revision to identify changes with respect to the previous issue due to the extensiveness of the changes.

Preparing Activity
Navy - MC
Project No. 8455-N450

Downloaded from http://www.everyspec.com

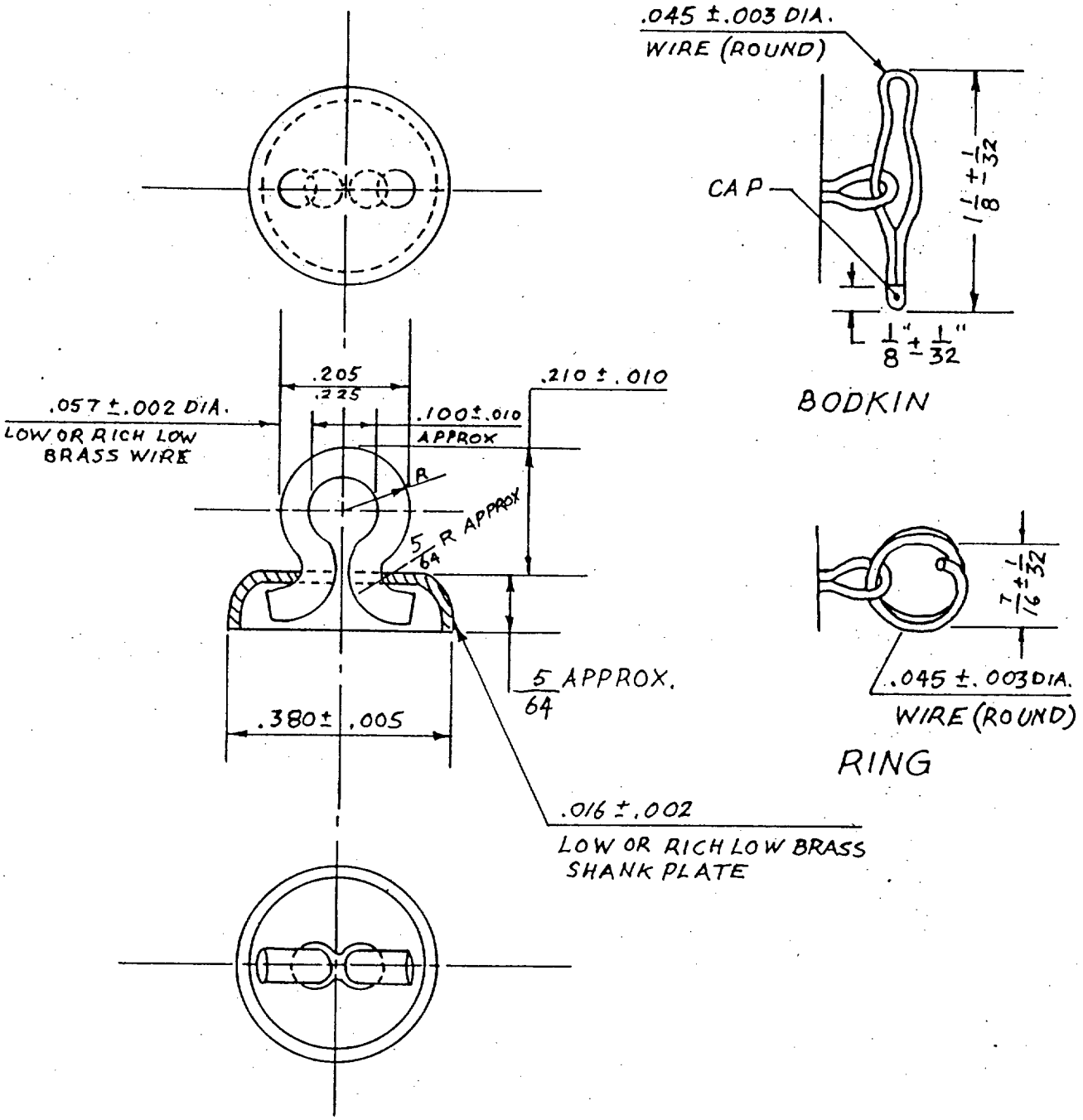

SHANK AND SHANK PLATE

FIGURE 1. BUTTONS, INSIGNIA, PLASTIC

Downloaded from http://www.everyspec.com

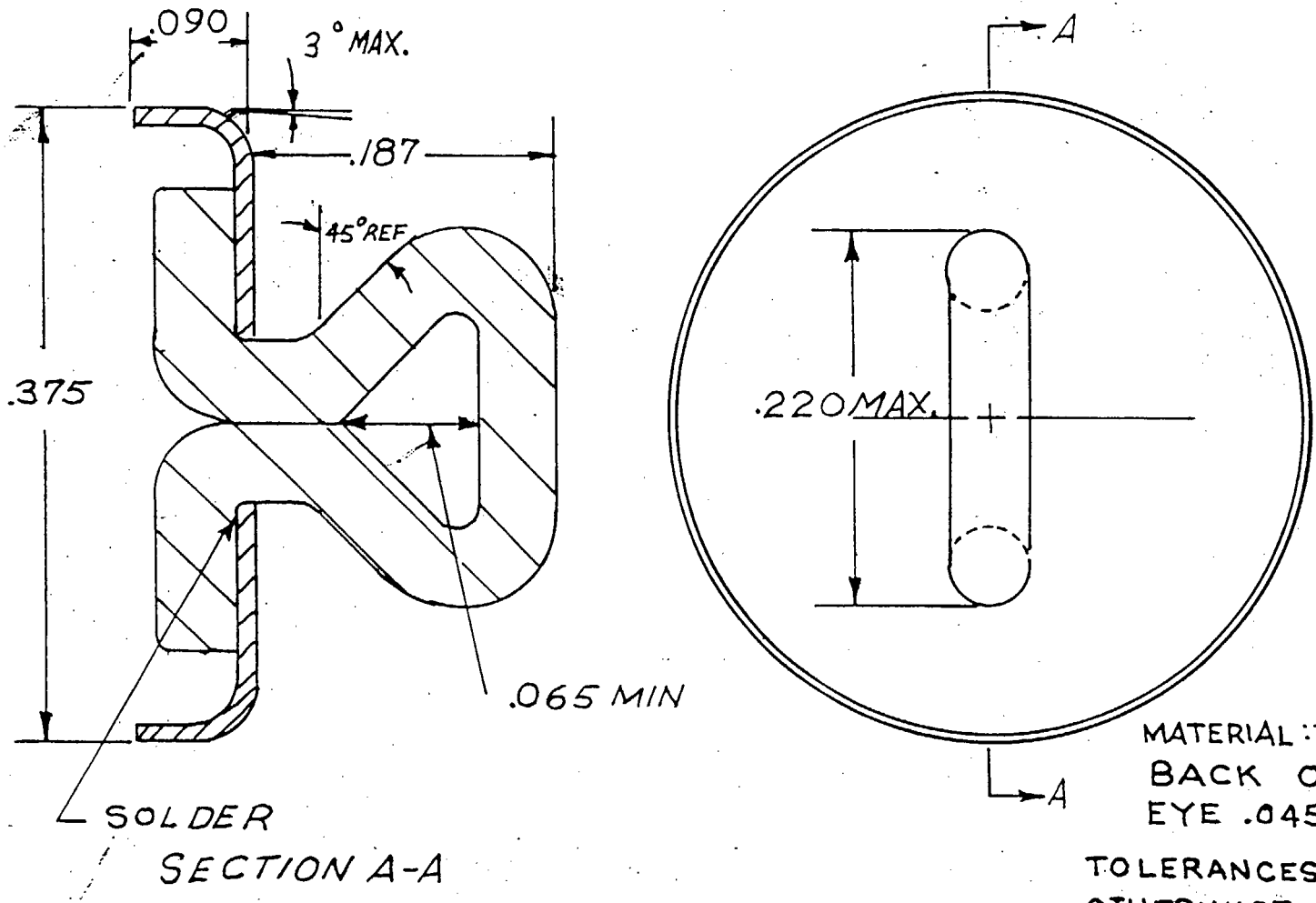

MATERIAL: TOLERANCE ± .007
BACK 015 BRASS
EYE .045 BRASS WIRE

TOLERANCES UNLESS OTHERWISE SHOWN.
DECIMAL ± .010
FRACTIONS ± 1/64
ANGLE ± 3°

SHORT SHANK AND SHANK PLATE

FIGURE 2. BUTTONS: INSIGNIA, PLASTIC

Source: https://assist.dla.mil -- Downloaded: 2016-05-14T13:27Z
Check the source to verify that this is the current version before use.

Downloaded from http://www.everyspec.com

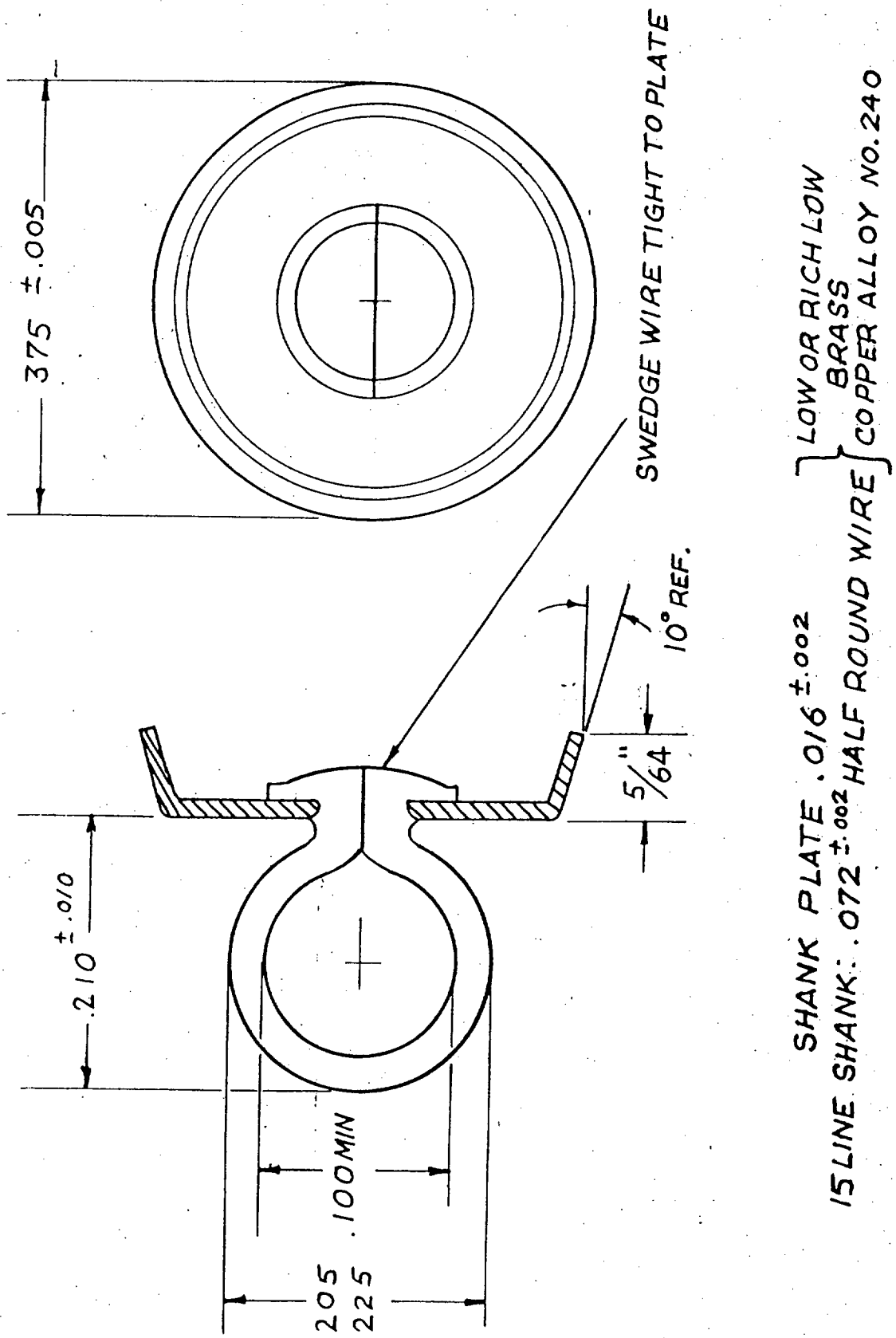

FIGURE 3. BUTTONS: INSIGNIA, PLASTIC

Downloaded from http://www.everyspec.com

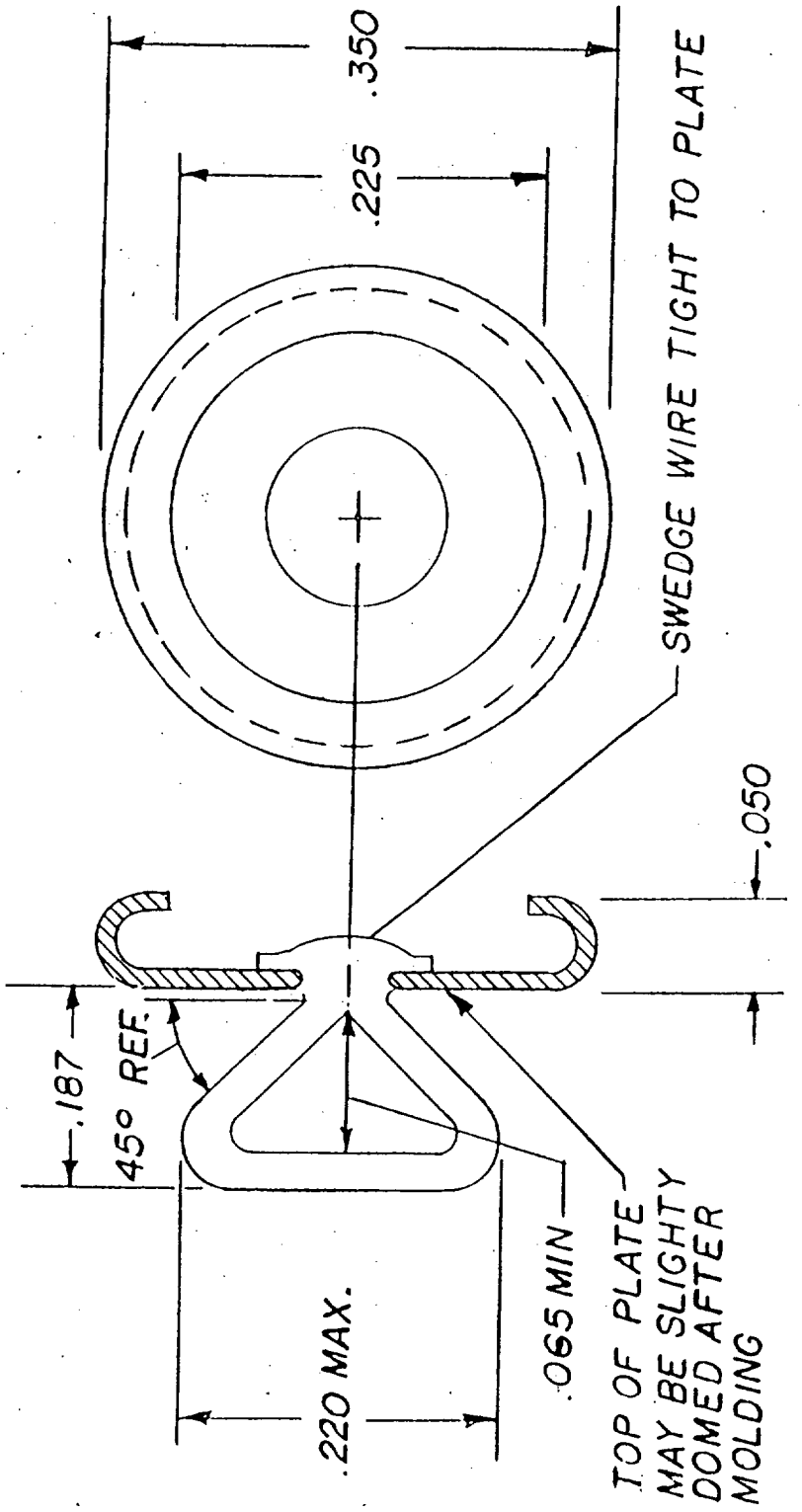

MATERIAL

SHANK - .072" ± .002 DIA. HALF ROUND WIRE
SHANK PLATE - .016" ± .002 THICK
LOW OR RICH LOW BRASS COPPER ALLOY No. 240

FIGURE: 4. BUTTON, PLASTIC ALTERNATE SHANK DETAIL

Source: https://assist.dla.mil -- Downloaded: 2016-05-14T13:27Z
Check the source to verify that this is the current version before use.