Downloaded from http://www.everyspec.com

| INCH-POUND |

MIL-B-15228G
17 November 1988
SUPERSEDING
MIL-B-15228F
30 April 1982

MILITARY SPECIFICATION

BED, BUNK, STEEL, ROUND TUBE, SINGLE AND DOUBLE-DECK (CONVERTIBLE TYPE)

This specification is approved for use by all Departments and Agencies of the Department of Defense.

1. SCOPE

1.1 Scope. This specification covers the requirements for component materials and their assembly into a single bunk bed with adapters for conversion to double-deck bunk beds.

1.2 Classification. The bunk beds covered by this specification will be of the following sizes as specified (see 6.2):

Size 1 - 36.0 inches wide by 79.0 inches long overall.
Size 2 - 36.0 inches wide by 84.0 inches long overall.

1.2.1 Part or Identifying Number (PIN). The PIN for the bunk beds covered by this specification will consist of a "M" prefix and the basic specification number followed by a hyphen and a two digit code number. The two digit code number corresponds to the size. The PINs for the two sizes of bunk beds are as follows:

a. M15228-01 for size 1 bunk bed.
b. M15228-02 for size 2 bunk bed.

| Beneficial comments (recommendations, additions, deletions) and any pertinent data which may be of use in improving this document should be addressed to: Commanding Officer (Code 156), Naval Construction Battalion Center, Port Hueneme, CA 93043-5000, by using the self-addressed Standardization Document Improvement Proposal (DD Form 1426) appearing at the end of this document or by letter. |

AMSC N/A FSC 7105

DISTRIBUTION STATEMENT A. Approved for public release; distribution is unlimited.

Downloaded from http://www.everyspec.com

2. APPLICABLE DOCUMENTS

2.1 Government documents.

2.1.1 Specifications and standards. The following specifications and standards form a part of this document to the extent specified herein. Unless otherwise specified, the issues of these documents are those listed in the issue of the Department of Defense Index of Specifications and Standards (DODISS) and supplement thereto, cited in the solicitation (see 6.2).

SPECIFICATIONS

FEDERAL

QQ-S-781 - Strapping, Steel, and Seals.
TT-C-490 - Cleaning Methods for Ferrous Surfaces and Pretreatments for Organic Coatings.
TT-E-529 - Enamel, Alkyd, Semi-Gloss.
PPP-B-601 - Boxes, Wood, Cleated-Plywood.
PPP-B-621 - Boxes, Wood, Nailed and Lock-Corner.
PPP-B-636 - Boxes, Shipping, Fiberboard.
PPP-B-640 - Boxes, Fiberboard, Corrugated, Triple-Wall.
PPP-T-76 - Tape, Packaging, Paper (For Carton Sealing).
PPP-T-97 - Tape, Packaging/Industrial, Filament Reinforced.

MILITARY

MIL-L-10547 - Liners, Case, and Sheet, Overwrap; Water-Vaporproof or Waterproof, Flexible.

STANDARDS

FEDERAL

FED-STD-151 - Metals, Test Methods.
FED-STD-595 - Colors.

MILITARY

MIL-STD-105 - Sampling Procedures and Tables for Inspection by Attributes.
MIL-STD-129 - Marking for Shipment and Storage.

(Unless otherwise indicated, copies of Federal and Military specifications and standards are available from the Naval Publications and Forms Center (ATTN: NPODS), 5801 Tabor Avenue, Philadelphia, PA 19120-5099.)

Downloaded from http://www.everyspec.com

2.2 Non-Government publications. The following documents form a part of this document to the extent specified herein. Unless otherwise specified, the issues of the documents which are DOD adopted are those listed in the issue of the DODISS cited in the solicitation. Unless otherwise specified, the issues of documents not listed in the DODISS are the issues of the documents cited in the solicitation (see 6.2).

AMERICAN IRON AND STEEL INSTITUTE (AISI)

AISI - Steel Products Manual.

(Application for copies should be addressed to the American Iron and Steel Institute, 150 East Forty-Second Street, New York, N.Y. 10017.)

AMERICAN SOCIETY FOR TESTING AND MATERIALS (ASTM)

ASTM A 36 - Structural Steel.
ASTM A 366 - Steel, Sheet, Carbon, Cold-Rolled, Commercial Quality.
ASTM A 513 - Electric-Resistance Welded Carbon and Alloy Steel Mechanical Tubing.
ASTM A 569 - Steel, Carbon (0.15 Maximum, Percent), Hot-Rolled Sheet and Strip Commercial Quality.
ASTM D 3951 - Commercial Packaging

(Application for copies should be addressed to the American Society for Testing and Materials, 1916 Race Street, Philadelphia, PA 19103.)

AMERICAN WELDING SOCIETY (AWS)

AWS A3.0 - Terms and Definitions.

(Application for copies should be addressed to the American Welding Society, Inc., 2501 Northwest 7th Street, Miami, FL 33125.)

(Non-Government standards and other publications are normally available from the organizations that prepare or which distribute the documents. These documents also may be available in or through libraries or other informational services.)

2.3 Order of precedence. In the event of a conflict between the text of this specification and the references cited herein (except for associated detail specifications, specifications sheets or MS standards), the text of this specification takes precedence. Nothing in this specification, however, supersedes applicable laws and regulations unless a specific exemption has been obtained.

Downloaded from http://www.everyspec.com

3. REQUIREMENTS

3.1 Description. The bunk bed (see Figure 1) shall be of all steel three-piece construction consisting of matching round steel tube, head and foot ends, a wedge type corner lock with four bearing points, and a fully-framed spring unit with sinuous (no-sag type) spring fabric, as shown in Figures 2 and 3. The bunk bed shall be of the size specified (see 6.2).

3.2 First article. When specified (see 6.2), a sample shall be subjected to first article inspection (see 4.2.1 and 6.4).

3.3 Interchangeability. All units of the same classification furnished with similar options under a specific contract shall be identical to the extent necessary to insure interchangeability of component parts, assemblies, accessories, and spare parts.

3.4 Materials. Materials used shall be free from defects which would adversely affect the performance or maintainability of individual components or of the overall assembly. Materials not specified herein shall be of the same quality used for the intended purpose in commercial practice. Unless otherwise specified herein, all equipment, material, and articles incorporated in the work covered by this specification are to be new and fabricated using materials produced from recovered materials to the maximum extent possible without jeopardizing the intended use. The term "recovered materials" means materials which have been collected or recovered from solid waste and reprocessed to become a source of raw materials, as opposed to virgin raw materials. Unless otherwise specified, none of the above shall be interpreted to mean that the use of used or rebuilt products are allowed under this specification.

3.4.1 Steel. All steel shall be smooth, free from rust, scale, pits, scratches, laps, and buckles affecting strength and appearance. Unless otherwise specified herein, the gage numbers or thicknesses specified for steel are subject to standard tolerances. Steel shall be tested in accordance with 4.5.1 where applicable.

3.4.1.1 Steel tubing. Steel tubing for bed ends, adapters, and stretcher braces shall be in accordance with ASTM A 513, electric resistance welded type, round.

3.4.1.2 Steel angles. Steel angles for spring fabric frame shall be in accordance with ASTM A 36 and shall be 2.0 inches by 1.5 inches by 0.1875 inch thick. Edges of angles shall be slightly rounded to avoid sharpness.

3.4.1.3 Spring fabric. Spring fabric shall be high carbon sinuous (no-sag type) furniture spring wire in accordance with table 7-55 of the AISI Steel Products Manual. Spring wire shall be number 10 United States (US) Steel Wire Gage, 31.0 inches long in the flat position, containing 19 full loops

Downloaded from http://www.everyspec.com

including the "Z" hook ends. Spring fabric shall be fabricated to 7.50 inches diameter ±0.50 inch. Cut ends shall not have burrs or sharp projections. Dimensional and size requirements shall be in accordance with Figure 4.

3.4.1.4 Spring fabric links. Spring fabric links shall be number 11 US Steel Wire Gage basic steel wire in accordance with table 7-48 of the AISI Steel Products Manual with galvanized finish. Dimensional and size requirements shall be in accordance with Figure 4.

3.4.1.5 Helical springs. Helical springs shall be number 12 US Steel Wire Gage steel premier wire with electrodeposited zinc coating. Tensile strength shall be in the range from 204,000 to 230,000 pounds per square inch. Dimensional and size requirements shall be in accordance with Figure 4.

3.4.1.6 Corner locks.

3.4.1.6.1 Male corner locks. The male corner locks shall be in accordance with ASTM A 569, hot-rolled sheet or strip, commercial quality steel, pickled and oiled of shape, thickness, and dimensional requirements shown in Figure 5. As an alternate, the male corner locks shall be in accordance with ASTM A 366, cold-rolled sheet, commercial quality, and oiled.

3.4.1.6.2 Male corner lock studs. Male corner lock studs shall be AISI designation C-1010 steel. When upset, shank shall be annealed for riveting with a Rockwell hardness of not greater than 40 on the "B" scale. When machined, studs shall be AISI designation CF-B-1113, C-1213, or C-1215 steel. Dimensional requirements shall be as shown in Figure 5.

3.4.1.6.3 Female corner locks. The female corner locks shall be in accordance with the requirements specified in 3.4.1.6.1 except that the shape, thickness, and dimensional requirements shall be as shown in Figure 6.

3.4.2 Paint. The epoxy-powder coating shall meet the dried film requirements of TT-E-529, type II. Color shall be in accordance with FED-STD-595, color number 16251 (Gray gloss), 20059, 20227, 23578, 26120, 26424, 27038 or 27769 as specified (see 3.7.2 and 6.2).

3.5 Accessories.

3.5.1 Steel caps. Steel caps for top of bed end posts shall be not less than number 24 US Standard Gage carbon steel, hardened and acid dipped for paint adhesion. Caps shall have 12 prongs with dimensional requirements as shown in Part A of Figure 7.

3.5.2 Bed shoes. Steel bed shoes for bed end posts shall be round body die-formed or machined from solid AISI Designation CF-B-1113 steel, chromium plated. Dimensional and hardening requirements shall be in accordance with Part C of Figure 7. The snap ring for securing steel shoe in bottom of the

Downloaded from http://www.everyspec.com

end post shall be in accordance with the requirements of Part D of Figure 7. As an alternate, bed shoes may be provided in accordance with the requirements of Part B of Figure 7. The shoe shall be a "file hard," nickel plated, cold rolled steel, die-formed base curled over a zinc plated hot rolled, die-formed inside shell with the resultant gap between the formed diameter of the inside shell and the curled base not greater than 0.03125 inch. The spring retainer shall be AISI Designation C-1010 cold rolled steel with a Rockwell hardness range between 85 to 95 on the "B" scale and assembled to the bed shoe with a zinc plated bright basic steel wire rivet and a zinc plated hot rolled steel washer between the spring retainer and the inside shell to absorb side thrust when mounted in the bed end post.

3.5.3 Adapter insert. Insert for adapter shall be cold rolled, sheet steel, matte finish, in accordance with ASTM A 366 fabricated into open joint tubing. The finish color of the adapter insert shall be the same as the bed.

3.6 Construction. To insure interchangeability, beds shall be similar and of the same construction in accordance with design, material thickness, dimensions and tolerances as shown in Figures 1 through 13 and as specified herein. Materials shall be as specified in 3.4 and accessories as specified in 3.5. Components for both size beds shall be the same, except the 84-inch long bed (size 2) shall require two additional strands of spring fabric, side rails shall be 5.0 inches longer than the 79-inch long bed (size 1), and spring fabric link sizes shall be in accordance with Figure 4.

3.6.1 Bed ends. Head and foot bed ends shall be of same construction as shown in Figure 8. Each bed end shall consist of two main posts, two horizontal tubes, four intermediate vertical tubes, two female corner locks, two steel caps and two bed shoes. Main posts shall be round steel tube, 28.50 inches high exclusive of shoes and caps, 1.50 inches outside diameter with a wall thickness of 0.083 inch. Horizontal tubes shall be steel, round, 0.875 inch outside diameter with a wall thickness of 0.065 inch. Intermediate tubes (filler) shall be steel, round, 0.50 inch outside diameter with a wall thickness of 0.065 inch. Horizontal tubes shall extend between the posts and intermediate tubes in a vertical position, parallel to the post tubes as shown in Figure 8. All tube connections shall be made by inserting them into connecting tubes, placing all components in jigs and joining by most applicable methods of welding around the entire perimeter of joints (see 3.10.1). Posts shall be closed at top with steel caps requiring 5.0 pounds pull ±1.0 pound to remove the cap and fitted at bottom with steel shoes requiring 10.0 pounds pull ±1 pound to remove from the post. The shoes shall be removable without use of tools, so beds can be converted to double-deck type when desired. Female corner lock shall be placed on main post as shown in Figure 8 to match the male corner lock on the spring unit. The female corner lock shall be properly jigged and welded across the top, bottom, down 1.0 inch from top and up 1.0 inch from bottom on the unexposed side as shown in Figure 6.

Downloaded from http://www.everyspec.com

3.6.2 Bed spring unit. The bed spring unit shall consist of an all welded angle frame, sinuous (no-sag type) spring fabric, two round tubular steel stretcher braces, and four male corner locks as shown in Figures 2 and 3. The frame shall be constructed of steel angle sides and ends as specified in 3.4.1.2, with the 2.0-inch flange in the vertical position and the 1.50-inch horizontal flanges punched as shown in Figure 9 for insertion of spring fabric "Z" hook ends in side angles and spring helicals in the end angles. The horizontal flanges of the end angles shall overlay the horizontal flanges of the side angles with width and length as shown in Figures 2 and 3. Frame shall be properly jigged and welded (see 3.10.1) as shown in Figures 10 and 11. Two stretcher braces of steel tubing with 0.875 inch outside diameter and a 0.065 inch wall thickness shall be bowed, and the ends flattened as shown in Figure 12. The stretcher braces shall be located on side angles as shown in Figure 2 for size 1 bed and as shown in Figure 3 for size 2 bed. Each end of the stretcher brace shall be secured to horizontal flange of side angle by a continuous weld along the entire union of the side angle surface and the stretcher brace edge. The male corner lock, as shown in Figure 5, shall be of the double stud design. The male corner lock plate shall be provided with two shouldered steel studs riveted (see 3.10.2) thereto to engage the female corner lock as shown in Figure 5. The male corner lock shall be located on side angle as shown in Figure 2 or 3 and welded thereto as shown in Figure 10. The upper and lower extension on the male lock end shall butt against the slotted surface of the female lock providing a lock wedge fit to prevent the bed from racking. There shall be four point contact between male and female corner locks; at upper and lower extensions on male lock end and the two studs. The spring fabric shall consist of 18 equally spaced transverse strands of sinuous (no-sag type) spring fabric for size 1 bed and 20 strands for size 2 bed. Each strand shall be connected to the adjacent strand with five rows of links (see Figure 4) clinched over the spring fabric. The "Z" hook ends of each strand shall be inserted in holes in horizontal flange of each side angle in a manner to provide secure retention; free from scratching and tearing hazard. Each end strand shall be attached to the end angle with five helical springs (see Figure 4).

3.6.3 Adapters. When specified (see 6.2), each pair of bunk beds shall be provided with a set of four adapters for converting to a double-deck bed. Adapters shall consist of a straight section of steel tubing 10.50 inches long with an outside diameter of 1.50 inches and a wall thickness of 0.083 inch and inserts (inner sleeves) (see 3.5.3) which shall project 3.0 inches from each end as shown in Figure 13. Insert shall be a drive fit within the outer tube and shall be further secured with two drive screws. Outer edges of insert ends shall be beveled to ease insertion into bed posts. Inserts shall be adjusted as necessary to fit snugly, after painting, into top of lower bed and bottom of upper bed posts when caps and shoes are removed. Adapters shall be examined for assembly and disassembly as specified in 4.4.2.

Downloaded from http://www.everyspec.com

3.7 Treatment and painting. All surfaces of the bunk beds, except plated steel shoes, shall be painted. Application of finish shall produce smooth and uniform surfaces without runs, wrinkles, and shall be free from objectionable defects such as scale under the finish, rust, or discoloring.

3.7.1 Surface preparation. All surfaces to be painted shall be treated in accordance with type I or type II of TT-C-490, except phosphate coating may be applied in three stages and a non-chromated final acidic rinse may be used.

3.7.2 Finish. All surfaces shall be finished with an epoxy-powder coating of the color specified (see 3.4.2 and 6.2) applied to a dry film thickness of not less than 1.1 mils. The coating shall be baked in accordance with the paint manufacturer's recommendations.

3.8 Identification marking. The letters "US" in characters 1.0 inch high shall be permanently and legibly indented at center of horizontal or vertical surface on one end angle of each bed. The specification number, stock number, nomenclature, manufacturer's name, trade name or trademark of such character easily identifiable with the manufacturer, and the year and contract number shall be indented or on a corrosion-resisting metal plate permanently attached on same end angle surface and to right of indented characters "US." Nomenclature shall be "Bed, Bunk, Steel, Round Tube, Single and Double-Deck." Bed ends shall be identified by permanently and legibly indenting the manufacturer's initials or trademark of such character easily identifiable with the manufacturer on one surface of one or both female corner locks. Letters or trademark shall be approximately 0.50 inch high at location shown in Figure 6.

3.9 Workmanship. Workmanship shall be of the highest quality throughout and in accordance with the best standard practice used in the manufacture of high grade commercial furniture of this type.

3.9.1 Welding. Bed spring fillet welds shall be in accordance with the definition and size requirements specified in AWS A3.0. The surface of parts to be welded shall be free from rust, scale, paint, grease, or other foreign matter. Welds shall be of sufficient size and shape to develop the full strength of the parts connected by the welds. Welds shall transmit stress without permanent deformation or failure when the parts connected by the weld are subjected to proof and service loadings. The deposited weld metal shall be thoroughly fused with base metal and edges of union and shall penetrate into the root of the joint. All rough surfaces or projecting fins shall be ground smooth to prevent personal injury or damage to bedding. Weld spatter or flux shall be removed from surfaces surrounding the welding area.

3.9.2 Riveting. Studs shall be secured to the male corner locks by peening as shown in Figure 5. The studs shall be tight with the shoulder and end in full contact with the male corner lock surfaces. The head of the stud end shall be flat, parallel to the male corner lock surface, and edges free of burrs or fins.

Downloaded from http://www.everyspec.com

4. QUALITY ASSURANCE PROVISIONS

4.1 Responsibility for inspection. Unless otherwise specified in the contract or purchase order, the contractor is responsible for the performance of all inspection requirements (examinations and tests) as specified herein. Except as otherwise specified in the contract or purchase order, the contractor may use his own or any other facilities suitable for the performance of the inspection requirements specified herein, unless disapproved by the Government. The Government reserves the right to perform any of the inspections set forth in the specification where such inspections are deemed necessary to ensure supplies and services conform to prescribed requirements.

4.1.1. Responsibility for compliance. All items shall meet all requirements of sections 3 and 5. The inspection set forth in this specification shall become a part of the contractor's overall inspection system or quality program. The absence of any inspection requirements in the specification shall not relieve the contractor of the responsibility of ensuring that all products or supplies submitted to the Government for acceptance comply with all requirements of the contract. Sampling inspection, as part of manufacturing operations, is an acceptable practice to ascertain conformance to requirements, however, this does not authorize submission of known defective material, either indicated or actual, nor does it commit the Government to accept defective material.

4.1.2 Component and material inspection. Components and materials shall be inspected in accordance with all the requirements specified herein and in applicable referenced documents.

4.2 Classification of inspections. The inspection requirements specified herein are classified as follows:

a. First article inspection (see 4.2.1).
b. Quality conformance inspection (see 4.2.2).

4.2.1 First article inspection. The first article inspection shall be performed on one bunk bed, or two bunk beds if adapters are required (see 3.6.3), when a first article is required (see 3.2 and 6.2). This inspection shall include the examination of 4.4, the tests of 4.5, and the packaging inspection of 4.6. The first article may be either a first production item or a standard production item from the supplier's current inventory provided the item meets the requirements of the specification and is representative of the design, construction, and manufacturing technique applicable to the remaining items to be furnished under the contract.

4.2.2 Quality conformance inspection. The quality conformance inspection shall include the examination 4.4, the tests of 4.5, and the packaging inspection of 4.6. This inspection shall be performed on the samples selected in accordance with 4.3.

Downloaded from http://www.everyspec.com

4.3 Sampling. Sampling and inspection procedures shall be in accordance with MIL-STD-105. The unit of product shall be one complete bunk bed or two complete bunk beds and four adapters, when adapters are required. A lot shall consist of one day's production of bunk beds (with adapters, if applicable), but shall not consist of more than 500 bunk beds and adapters. If an inspection lot is rejected, the contractor may rework it to correct the defects, or screen out the defective units, and resubmit for a complete reinspection. Resubmitted lots shall be reinspected using tightened inspection. If the rejected lot was screened, reinspection shall be limited to the defect causing rejection. If the lot was reprocessed, reinspection shall be performed for all defects. Rejected lots shall be separated from new lots, and shall be clearly identified as reinspected lots.

4.3.1 Sampling for examination. Examination shall be based on inspection level S-4 and an acceptable Quality Level (AQL) of 2.5 defects per hundred units for major defects and 4.0 defects per hundred units for minor defects.

4.3.2 Sampling for tests. Tests shall be based on inspection level S-4 and an AQL of 2.5 defects per hundred units.

4.4 Examination. Each sample shall be examined for compliance with the requirements specified in section 3 of this specification. Any redesign or modification of the manufacturer's standard product to comply with specified requirements, or any necessary redesign or modification following failure to meet specified requirements shall receive particular attention for adequacy and suitability. Defects shall be classified in accordance with table I. Each attribute within each classification of multiple defects shall constitute one defect.

4.4.1 Bed assembly examination. Each sample shall be assembled to determine ease of assembly and proper fit of mating parts. In addition, the beds shall be double-decked, when adapters are required, to assure proper overall dimensions among beds. Failure of studs and male corner lock extensions (see 3.6.1) to fit properly, requiring excessive force or use of tools to assemble or inability to match top bed post bottoms and bottom bed top, when double-decking each, shall constitute a major defect.

TABLE I. Classification of defects.

Classification	Defect	Requirement paragraph
Critical	None defined.	
Major		
101	Design and construction not as specified.	3.1, 3.4, 3.5, and 3.6

Downloaded from http://www.everyspec.com

TABLE I. Classification of defects - Continued.

Classification	Defect	Requirement paragraph
102	Parts not manufactured to interchangeable standards.	3.3 and 3.6
103	Steel surfaces not as specified.	3.4.1
104	Steel components not as specified.	3.4.1.1 thru 3.4.1.6.3
105	Epoxy-powder not as specified.	3.4.2
106	Steel caps not as specified.	3.5.1
107	Bed shoes not as specified.	3.5.2
108	Overall dimensions not as specified.	3.6 and Figure 1
109	Bed end dimensions not as specified.	3.6.1 and Figure 8
110	Wall thickness of main posts not as specified.	3.6.1
111	Wall thickness of horizontal and intermediate vertical tubes not as specified.	3.6.1
112	Tube connections not as specified.	3.6.1
113	Shoes not removable without use of tools.	3.6.1
114	Female corner locks not welded as specified.	3.6.1 and Figure 6
115	Bed spring unit angle frame members not welded as specified.	3.6.2 and Figures 10 and 11
116	Long leg of angle sides not in vertical position as specified.	3.6.2
117	Stretcher braces not as specified.	3.6.2

Downloaded from http://www.everyspec.com

TABLE 1. Classification of defects - Continued.

Classification	Defect	Requirement paragraph
Major (Continued)		
118	Stretcher braces not located as specified.	3.6.2
119	Corner locks not located as specified.	3.6.2
120	Number of strands of spring fabric not as specified.	3.6.2
121	Spring fabric loose and not attached as specified.	3.6.2
122	Hook ends of spring fabric not free of scratching and tearing hazard.	3.6.2
123	Adapters not as specified (when adapters are required).	3.6.3
124	Four adapters not provided for each set of two beds (when adapters are required).	3.6.3
125	Dimensions and thicknesses for adapters not as specified.	3.6.3
126	Outer edges of adapter insert ends not beveled.	3.6.3
127	Finish not without runs, wrinkles, or areas of thin or no film, or other defects such as indication of rust or scale under finish or discoloring.	3.7
128	Surfaces to be painted not prepared as specified.	3.7.1
129	Thickness of finish coat less than as specified.	3.7.2
130	Coating baking cycle not as specified.	3.7.2

Downloaded from http://www.everyspec.com

TABLE I. Classification of defects - Continued.

Classification	Defect	Requirement paragraph
Major (Continued)		
131	Welding not as specified.	3.9.1
132	Studs not secured as specified.	3.9.1
133	Preservation, packaging, and marking not as specified.	5.1, 5.2, and 5.3
Minor		
201	Edges of angles not rounded.	3.4.1.2
202	Color not as specified.	3.4.2 and 3.7.2
203	Pull necessary to remove steel caps not as specified.	3.6.1
204	Pull necessary to remove steel shoes not as specified.	3.6.1
205	Identification marking missing, illegible, or not as specified.	3.8

4.4.2 Adapter assembly examination. When adapters are procured separately or with beds, samples shall be examined for ease of double-decking. Assembly and disassembly with beds or steel tubes of same diameter and wall thickness as bed main posts as specified herein shall be performed manually without the use of tools and shall be a snug fit. Inside diameter of bed posts or steel tubes shall be checked periodically for proper dimensions (see Figure 13).

4.5 Tests.

4.5.1 Metals. Specimens of metal components shall be tested in accordance with FED-STD-151 wherever applicable.

4.5.2 Bed test. A load of 600 pounds shall be placed across the side angles of spring unit of an assembled bed, midway between the bed ends. The test load bottom or base shall be approximately 18.0 inches wide. At the center of the spring unit, the deflection of the spring unit side angles shall be not greater than 0.4375 inch with the 600 pound load in place. Upon removal of the test load, the spring unit shall return to its original position with no visible distortion in the bed locks or spring unit frame.

Downloaded from http://www.everyspec.com

4.6 Packaging inspection. The preservation, packing, and marking of the item shall be inspected to verify conformance to the requirements of section 5.

5. PACKAGING

5.1 Preservation. Preservation shall be level A or commercial as specified (see 6.2).

5.1.1 Level A. The main posts and the horizontal tubes of the bed ends (head and foot ends), and the end angles and corner locks of the bed spring unit shall be completely wrapped with cushioning material securely fastened in place with tape or twine in a manner which will prevent shifting or becoming detached. Additional cushioning material shall be used as required to protect any other metal surfaces from damage. Two complete single bunk beds shall be arranged into a compact assembly in order to provide the smallest practicable shipping cube and to provide support for the faces and edges of the exterior shipping container, as follows:

a. The four cushioned bed ends shall be placed inside one inverted bed spring unit in the following manner:

(1) One bed end shall be placed with the corner locks facing upward and one main post resting against the inside of the bed spring unit end angle and with the horizontal tubes parallel to and equidistant from the unit side angles.

(2) A second bed end shall be placed in the same position on top of the first bed end, except that the corner locks shall face downward, one main post shall rest against the outside of the corner lock of the first bed end, and the horizontal tubes shall be offset from the horizontal tubes of the first bed end by a distance equal to the approximate diameter of one tube.

(3) The other two bed ends shall be placed at the other end of the inverted bed spring unit in the same manner.

b. The second bed spring unit with the spring fabric facing outward shall then be placed on top and nested and offset so that all corner locks are adjacent to and alongside the corresponding corner locks of the inverted unit; at each corner, the corner lock of one unit bears on the angle of the other unit.

The assembly shall be secured in this position by the application of two flat steel straps conforming to QQ-S-781 at each end which completely encircle the main posts and the end angles. Each strap shall be located between the horizontal tube and the side angle and shall be drawn as tight as possible to provide a compact nonshifting assembly. The width of the strapping shall be not less than 0.75 inch and shall be prevented from coming in direct contact with metal surfaces of the assembly by means of the applied cushioning or by use of additional separating material. When adapters are furnished with the bunk beds (see 3.6.3), they shall be cushioned with the materials specified

Downloaded from http://www.everyspec.com

herein and secured in an appropriate location inside the bed spring units with filament reinforced tape conforming to PPP-T-97 or flat steel strapping conforming to QQ-S-781.

5.1.1.1 Adapters (procured separately). Adapters procured separately from bunk beds shall be packaged in quantities of four in a close-fitting fiberboard box conforming to PPP-B-636 with a bursting strength of not less than 175 pounds per square inch and the box closed and secured. The adapters shall be cushioned to prevent contact between pieces.

5.1.2 Commercial. Bunk beds (with adapters when furnished), and adapters (when furnished separately) shall be preserved in accordance with ASTM D 3951.

5.2 Packing. Packing shall be level A, B, or commercial as specified (see 6.2).

5.2.1 Level A. Two complete single bunk beds, packaged as specified in 5.1.1, shall be packed in a close-fitting box conforming to PPP-B-601 overseas type or PPP-B-621, class 2. The box shall be close-fitting such that the cushioning material on the outermost parts of the assembly bears against the inner surfaces of the exterior shipping container in a snug manner. The box shall be provided with a waterproof case liner conforming to MIL-L-10547, sealed in accordance with the appendix thereto.

5.2.1.1 Adapters (procured separately). Adapters procured separately from bunk beds, packaged as specified in 5.1.1.1, shall be packed in boxes specified in 5.2.1. The boxes shall be provided with case liners as specified in 5.2.1.

5.2.2 Level B. Two complete single bunk beds, packaged as specified in 5.1.1, shall be packed in a close-fitting box conforming to either PPP-B-640, Class 2, PPP-B-601, domestic type, or PPP-B-621, class 1. Boxes conforming to PPP-B-640 shall be closed, sealed, and reinforced with flat steel strapping conforming to QQ-S-781 and waterproofed in accordance with the appendix to PPP-B-640 with tape conforming to PPP-T-76.

5.2.2.1 Adapters (procured separately). Adapters procured separately and packaged as specified in 5.1.1.1 shall be packed as specified in 5.2.2 or in boxes conforming to PPP-B-636, class weather-resistant and closed in accordance with method V of the appendix thereto.

5.2.3 Commercial. Bunk beds (with adapters when furnished) and adapters (when furnished separately) shall be packed in accordance with ASTM D3951.

5.3 Marking. Marking shall be in accordance with MIL-STD-129. Boxes containing both bunk beds and adapters shall be marked noting that adapters are also included in the box.

6. NOTES

(This section contains information of a general or explanatory nature that may be helpful, but is not mandatory.)

Downloaded from http://www.everyspec.com

6.2.1 Acquisition requirements. Acquisition documents must specify the following:

a. Title, number, and date of this specification.
b. Issue of DODISS to be cited in the solicitation, and if required, the specific issue of individual documents referenced (see 2.1.1 and 2.2).
c. Size required (see 1.2).
d. When first article is required for inspection and approval (see 3.1).
e. Color of paint (see 3.4.2).
f. When four adapters are to be provided with each pair of bunk beds (see 3.6.3).
g. Level of preservation and Level of packing (see 5.1. and 5.2).

6.3 Consideration of data requirements. The following data requirements should be considered when this specification is applied on a contract. The applicable Data Item Description (DID) should be reviewed in conjunction with the specific acquisition to ensure that only essential data are requested/provided and that the DID is tailored to reflect the requirements of the specific acquisition. To ensure correct contractual application of the data requirements, a Contract Data Requirements List (DD Form 1423) must be prepared to obtain the data, except where DOD FAR Supplement 27.475-1 exempts the requirement for a DD Form 1423.

Reference Paragraph	DID Number	DID Title	Suggested Tailoring
None	DI-M-24035	Publication, Assembly Instruction	---

The above DID was cleared as of the date of this specification. The current issue of DOD 5010.12L, Acquisition Management Systems and Data Requirements Control List (AMSDL), must be researched to ensure that only current, cleared DID's are cited on the DD Form 1423.

6.3.1 Assembly instructions. The manufacturer should prepare assembly instructions for single bed, double decking (see 6.3). In addition, a sketch similar to Figure 14 should be included in the instructions to preclude the possibility of forcing male corner lock studs to seat or bottom in female corner lock. Instructions should be provided on a white paper sheet, 8.5 inches wide by 11.0 inches long. Instructions for assembly of the bunk bed should contain the following information:

a. Single bed assembly instructions: Assemble a single bunk bed by placing a spring unit on the floor with spring up, stand a bed end at each end of the spring unit, with one person standing outside of each bed end, lift the spring unit up and place between the slotted extensions on the main posts of the bed end and fit the studs into the slots. Lightly tap each corner to set the studs in the slots. DO NOT FORCE THE STUDS TO SEAT AT BOTTOM OF THE SLOTS. See illustration below. (NOTE: A sketch similar to Figure 14 should be inserted below this paragraph contained in the assembly instructions).

Downloaded from http://www.everyspec.com

b. Double decking instructions: Assemble two bunk beds as instructed above. Remove the caps from the top of the main posts at each corner of one bed and remove the bed shoes from the bottom of the main posts of the other bed. Place an adapter into each post from which the caps were removed. Lift the other bed above the adapters and insert the top of the adapters into the bottom of the main posts.

6.4 First article. When a first article inspection is required, the item should be a first article sample or it may be a standard production item from the contractor's current inventory as specified in 4.2.1. The first article should consist of one complete bed or two complete beds with four adapters. The contracting officer should include specific instructions in acquisition documents regarding arrangements for examinations, approval of first article test results and disposition of first articles. Invitations for bids should provide that the Government reserves the right to waive the requirement for samples for first article inspection to those bidders offering a product which has been previously acquired or tested by the Government, and that bidders offering such products, who wish to rely on such production or test, must furnish evidence with the bid that prior Government approval is presently appropriate for the pending contract.

6.5 Subject term (key word) listing.

Adapters
Helical springs
Corner locks
Bed ends
Bed spring unit

6.6 Changes from previous issue. Marginal notations are not used in this revision to identify changes with respect to the previous issue due to the extensiveness of the changes.

Custodians:
Army - GL
Navy - YD
Air Force - 99

Review Activities:
Army - MD
Navy - MC
Air Force - 84

Preparing activity:
Navy - YD

(Project 7105-0258)

Downloaded from http://www.everyspec.com

NOTE: MEASURE OVERALL BUNK BED LENGTH AT MID POINT BETWEEN TOP AND BOTTOM OF BED POSTS.

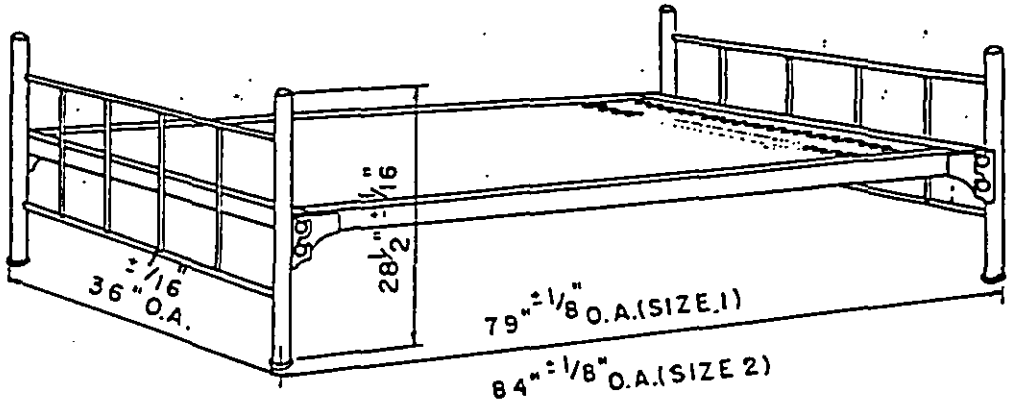

A. MILITARY STANDARD BUNK BED, SINGLE

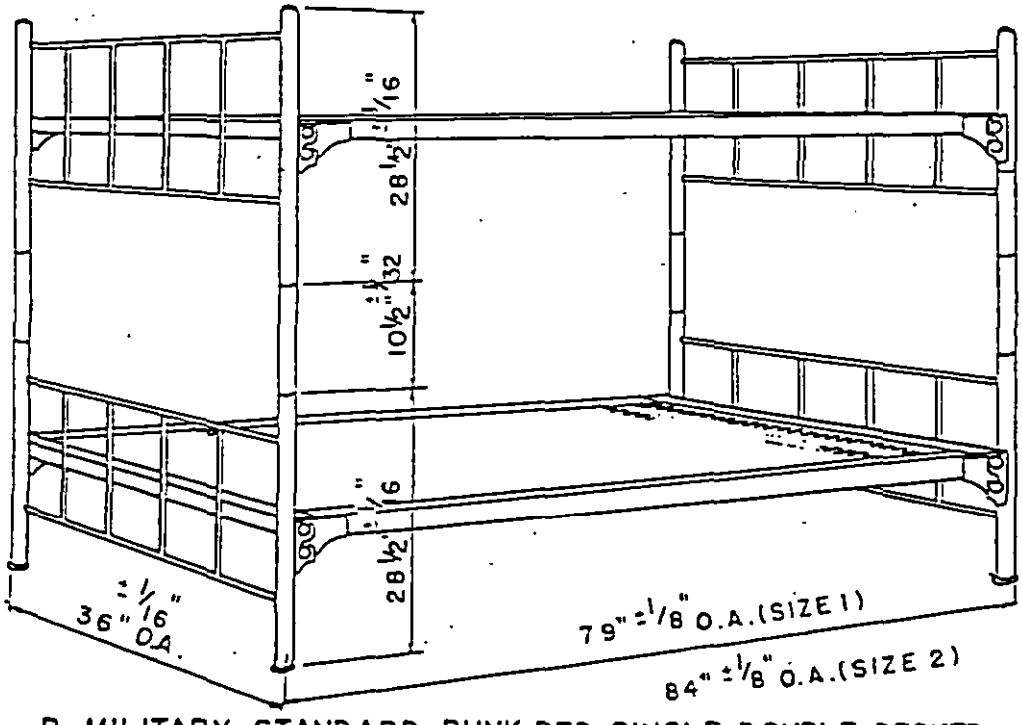

B. MILITARY STANDARD BUNK BED, SINGLE DOUBLE DECKED

FIGURE 1. Military standard bunk bed, steel, single and double-deck (convertible type).

Downloaded from http://www.everyspec.com

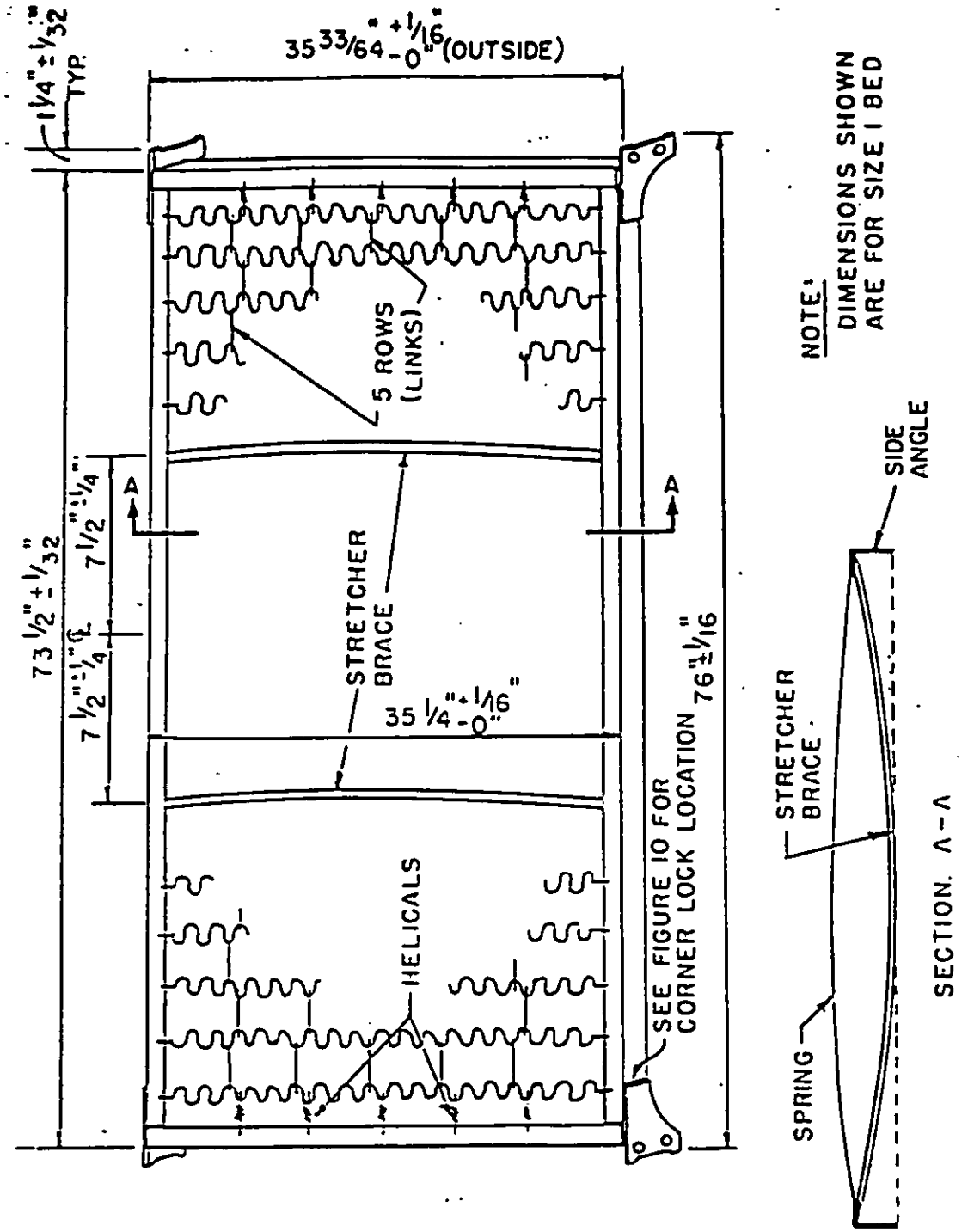

FIGURE 2. Military standard bunk bed spring unit (top view).

Downloaded from http://www.everyspec.com .

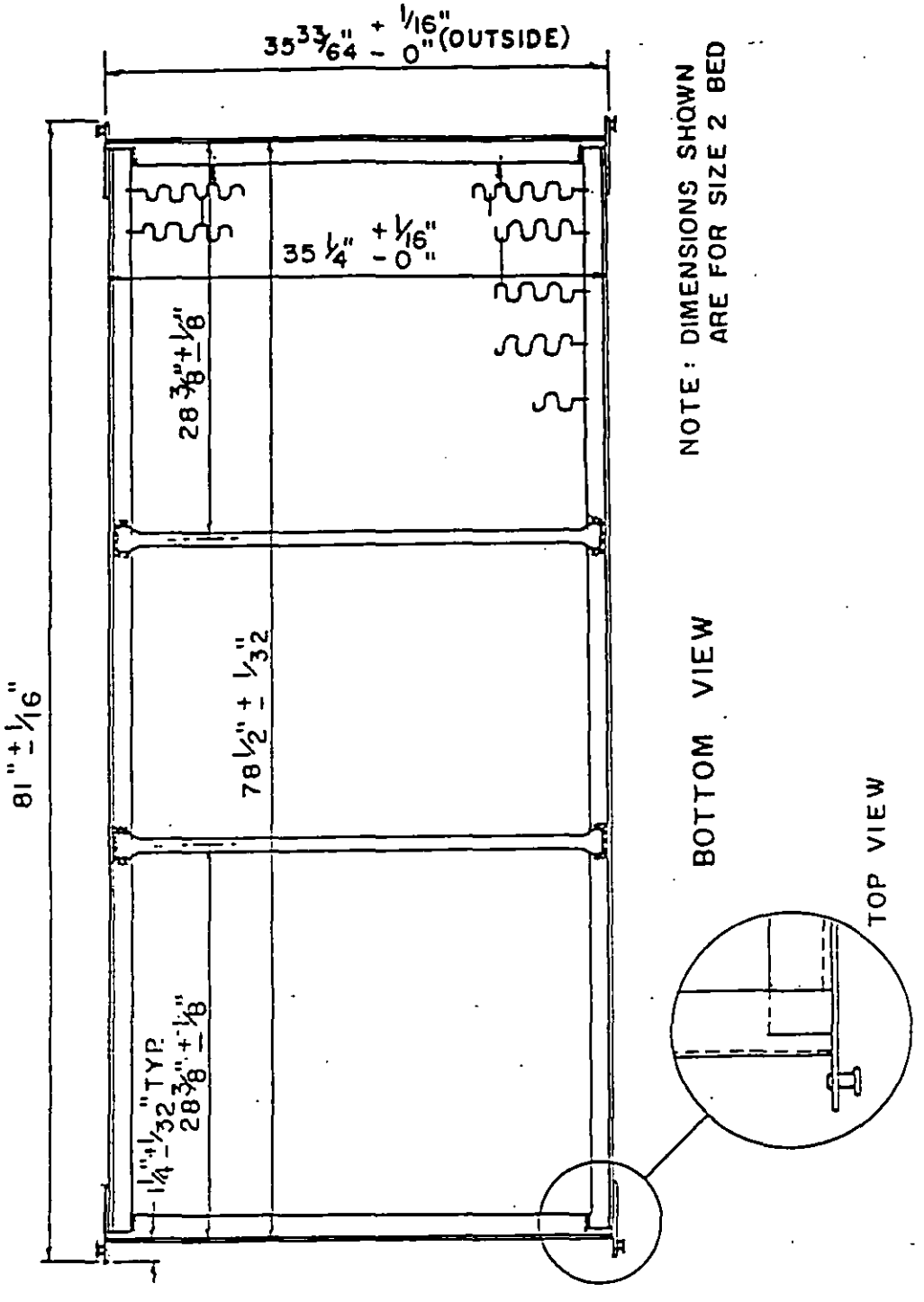

FIGURE 3. Military standard bunk bed spring unit (bottom view).

Downloaded from http://www.everyspec.com

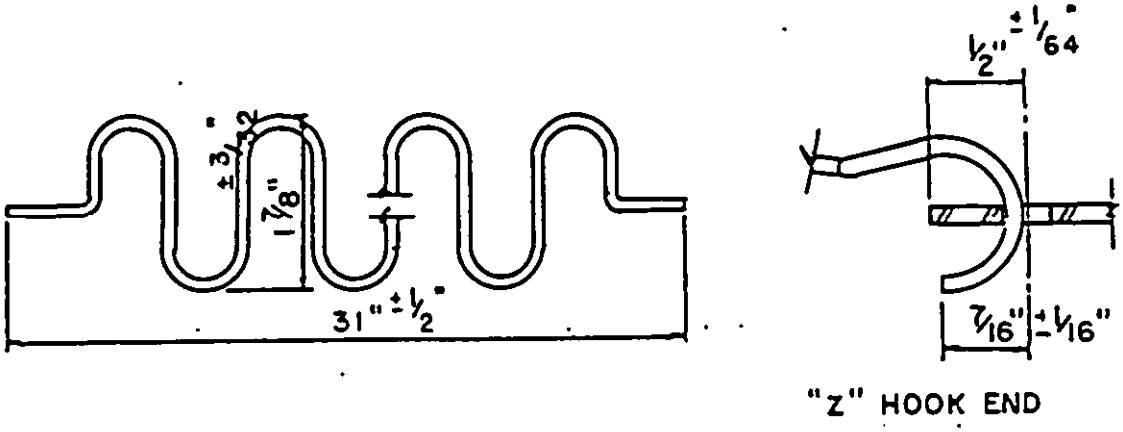

A. SPRING FABRIC (no sag type)

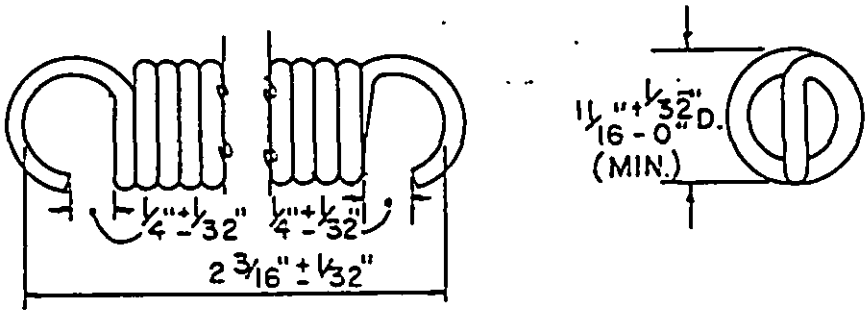

B. SPRING FABRIC HELICALS
(12 turns close wound)
2.045" ±.005" SIZE 2
2.1875" ±.005" SIZE 1

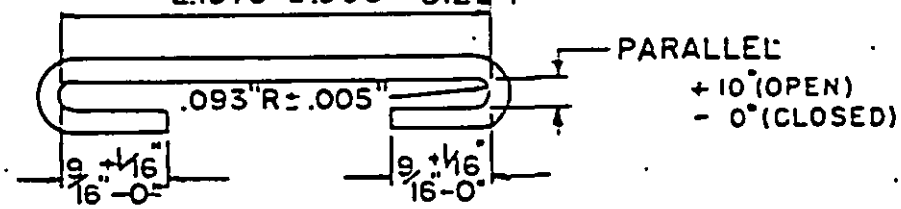

C. SPRING FABRIC LINK

FIGURE 4. Spring unit components.

Downloaded from http://www.everyspec.com

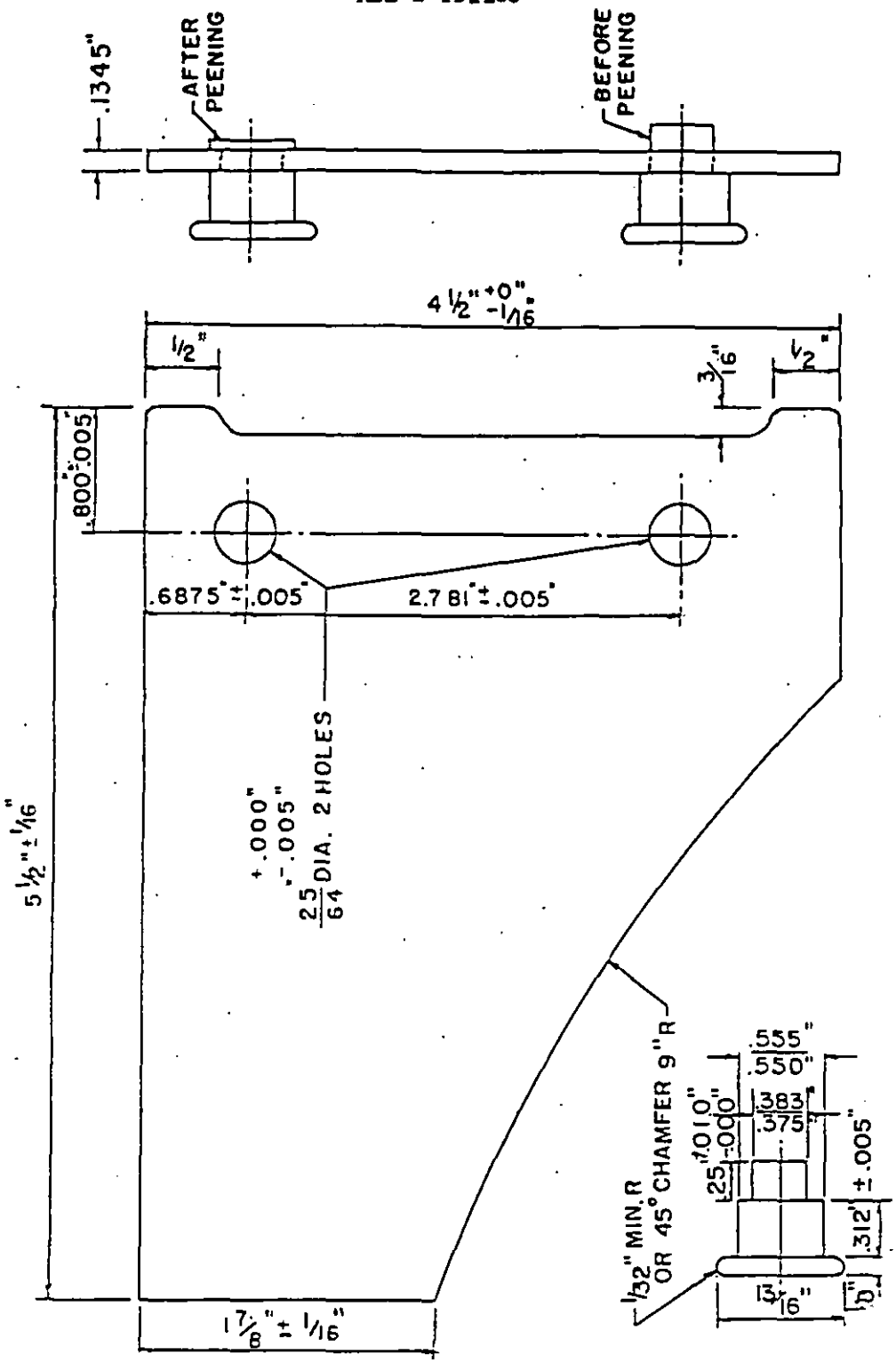

FIGURE 5. Male corner lock.

Downloaded from http://www.everyspec.com

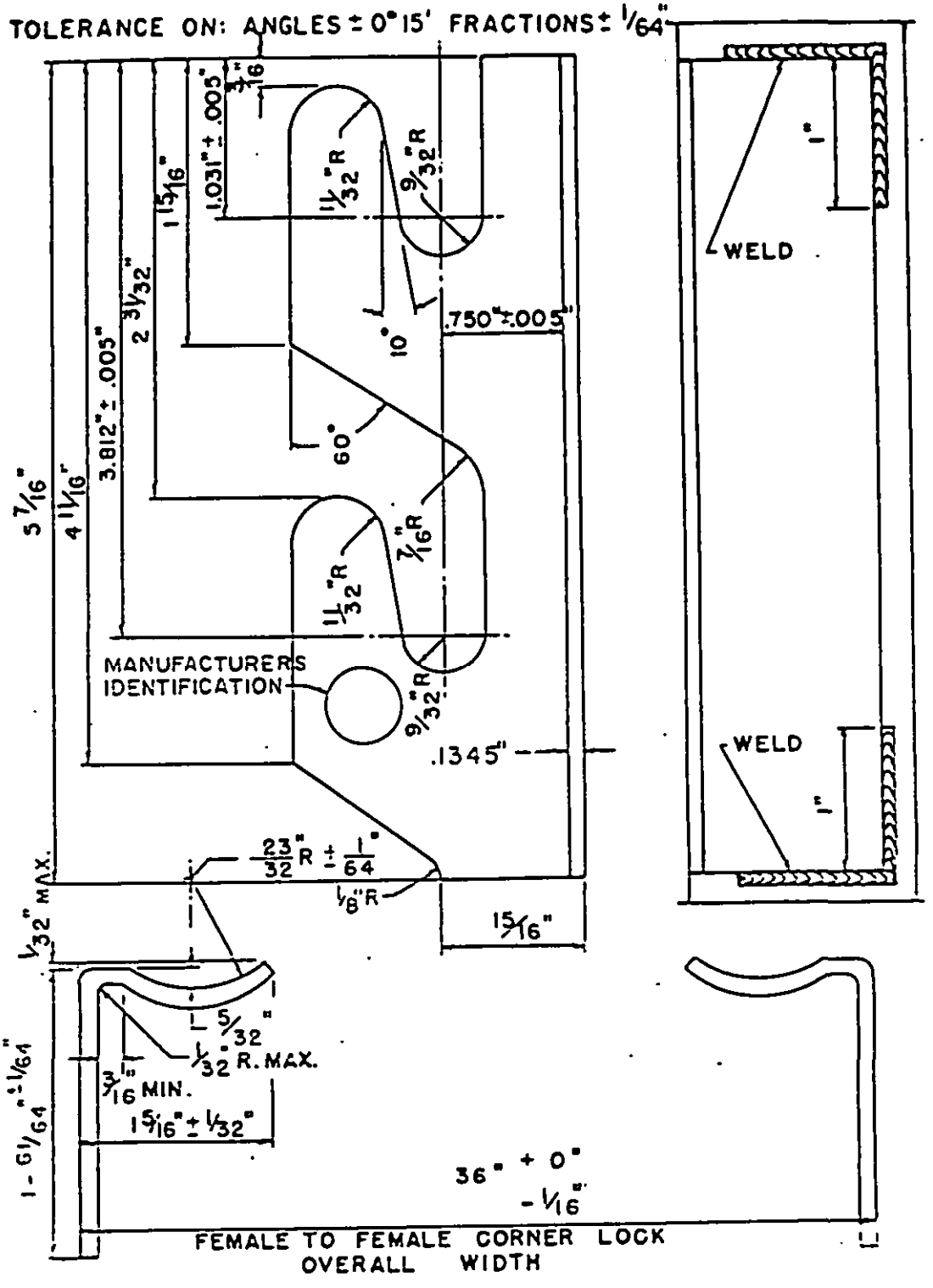

FIGURE 6. Female corner lock.

Downloaded from http://www.everyspec.com

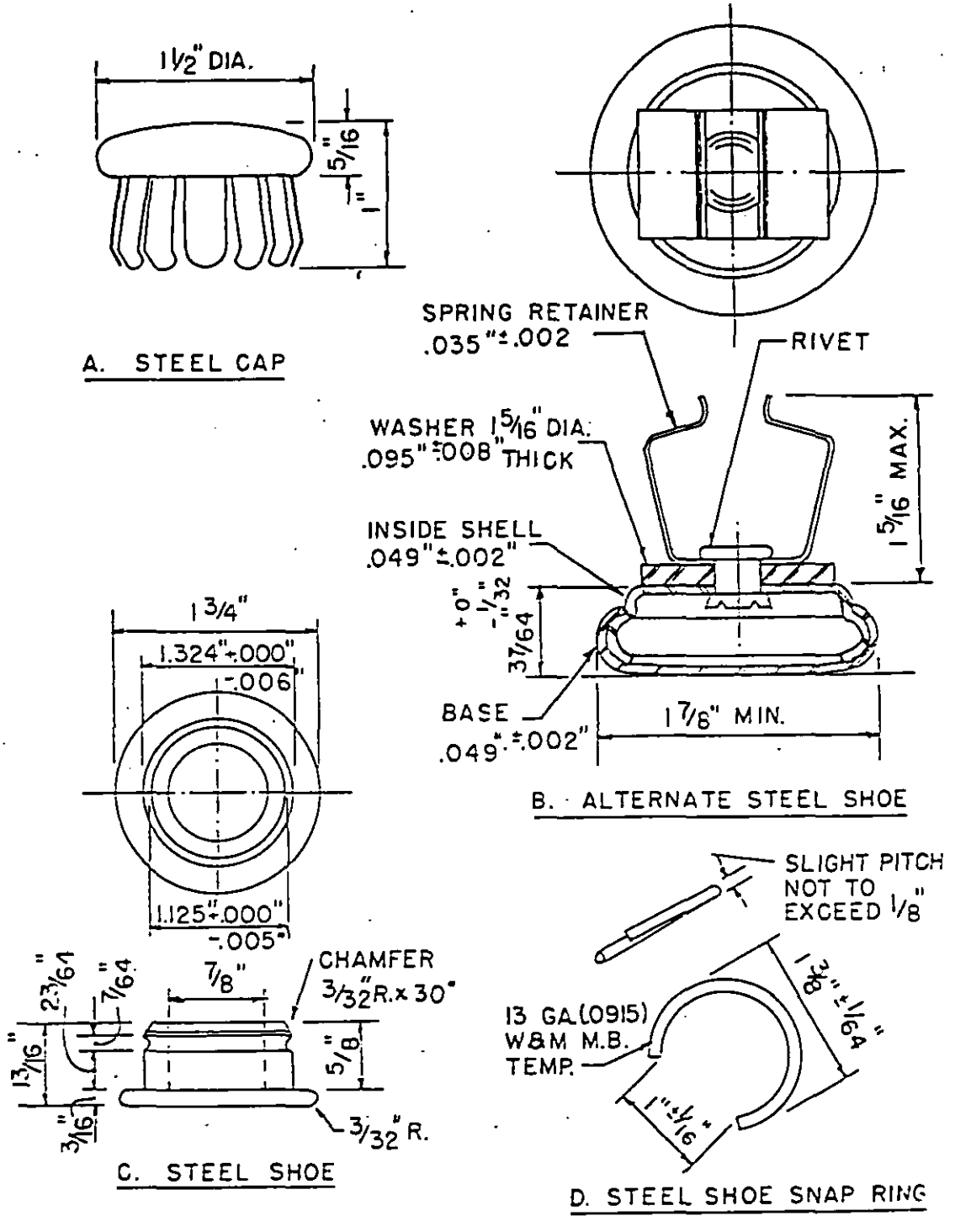

FIGURE 7. Steel cap and shoes.

Downloaded from http://www.everyspec.com

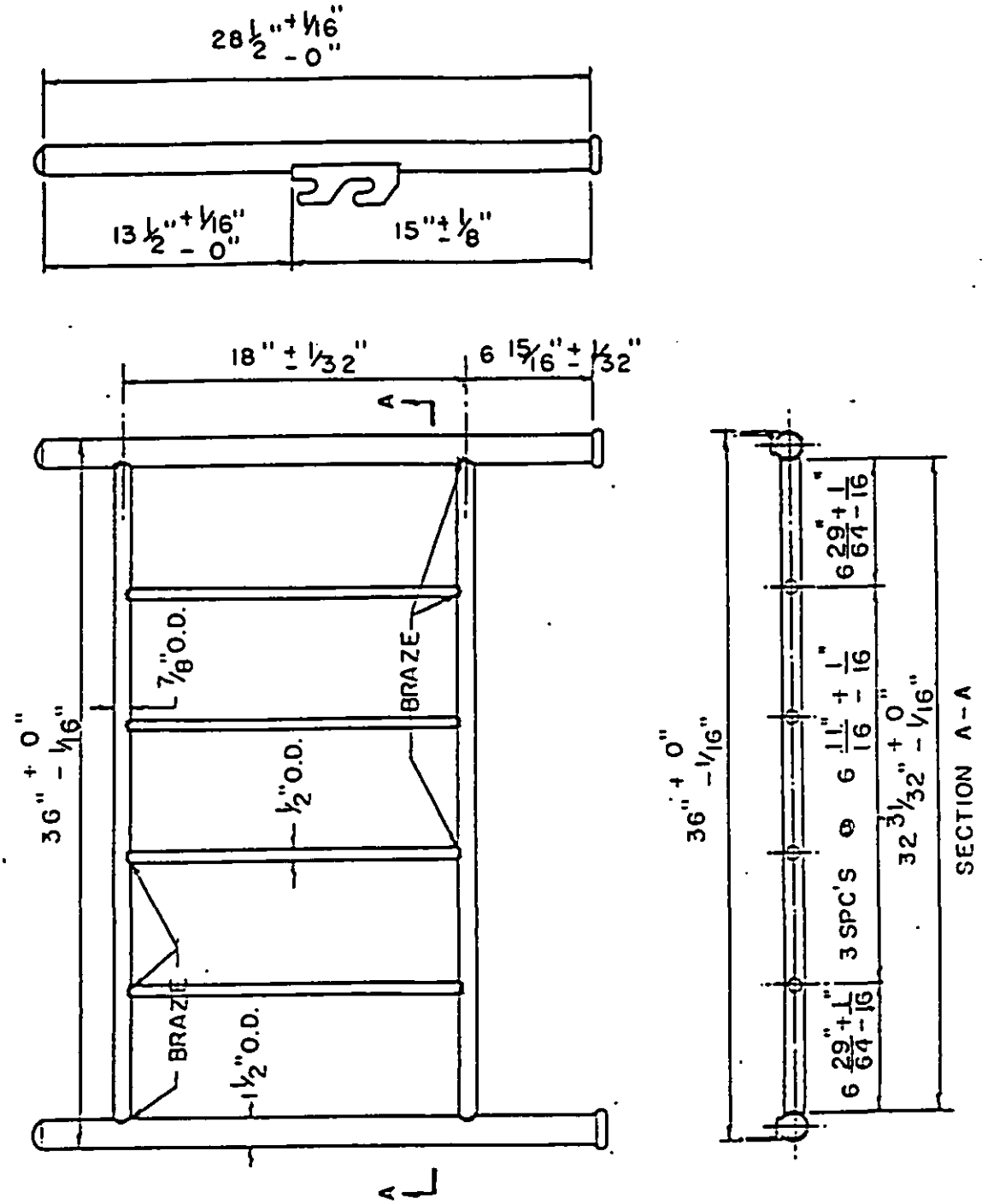

FIGURE 8. Bunk bed head and foot ends.

Downloaded from http://www.everyspec.com

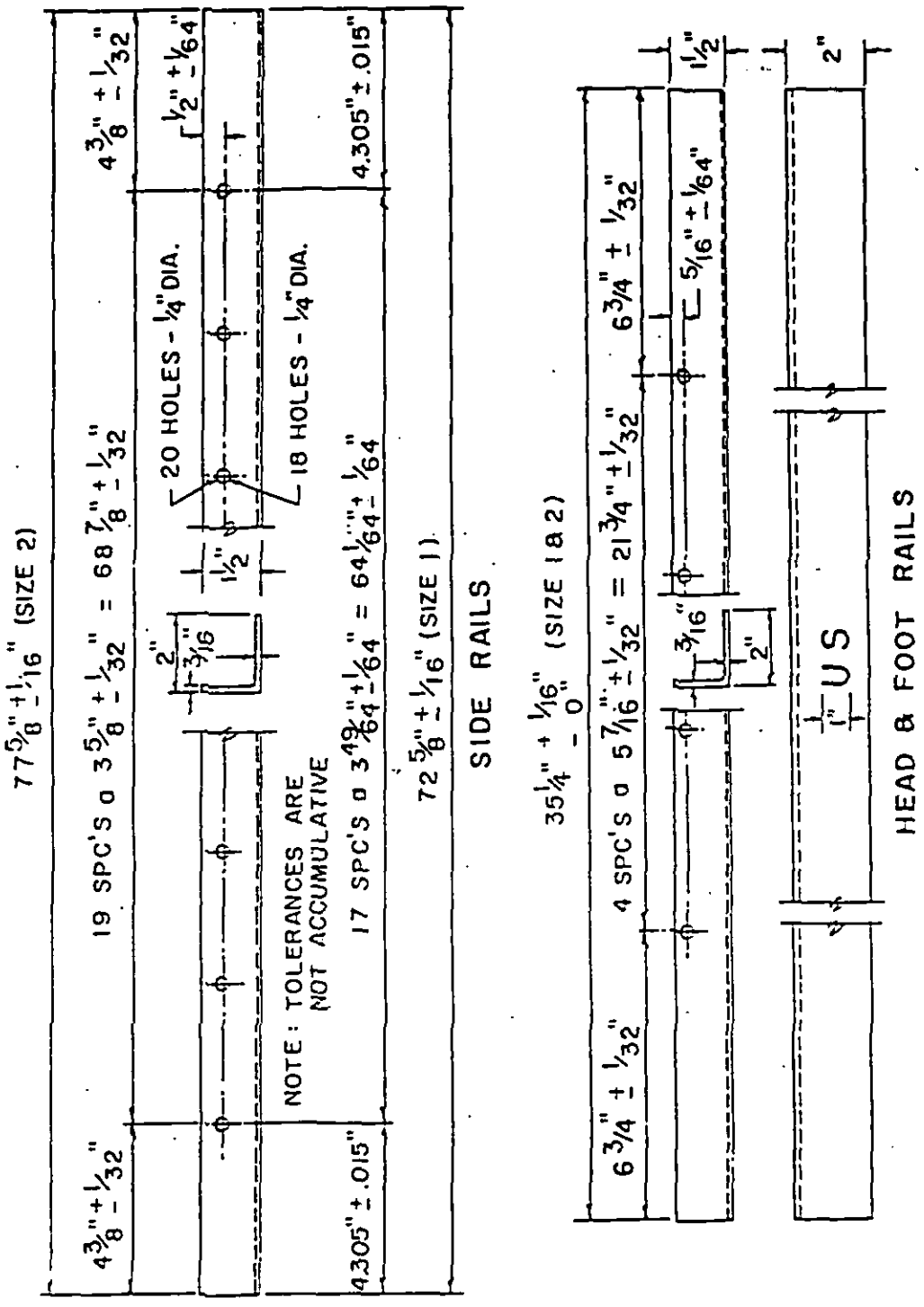

FIGURE 9. Side, head, and foot rails.

Downloaded from http://www.everyspec.com

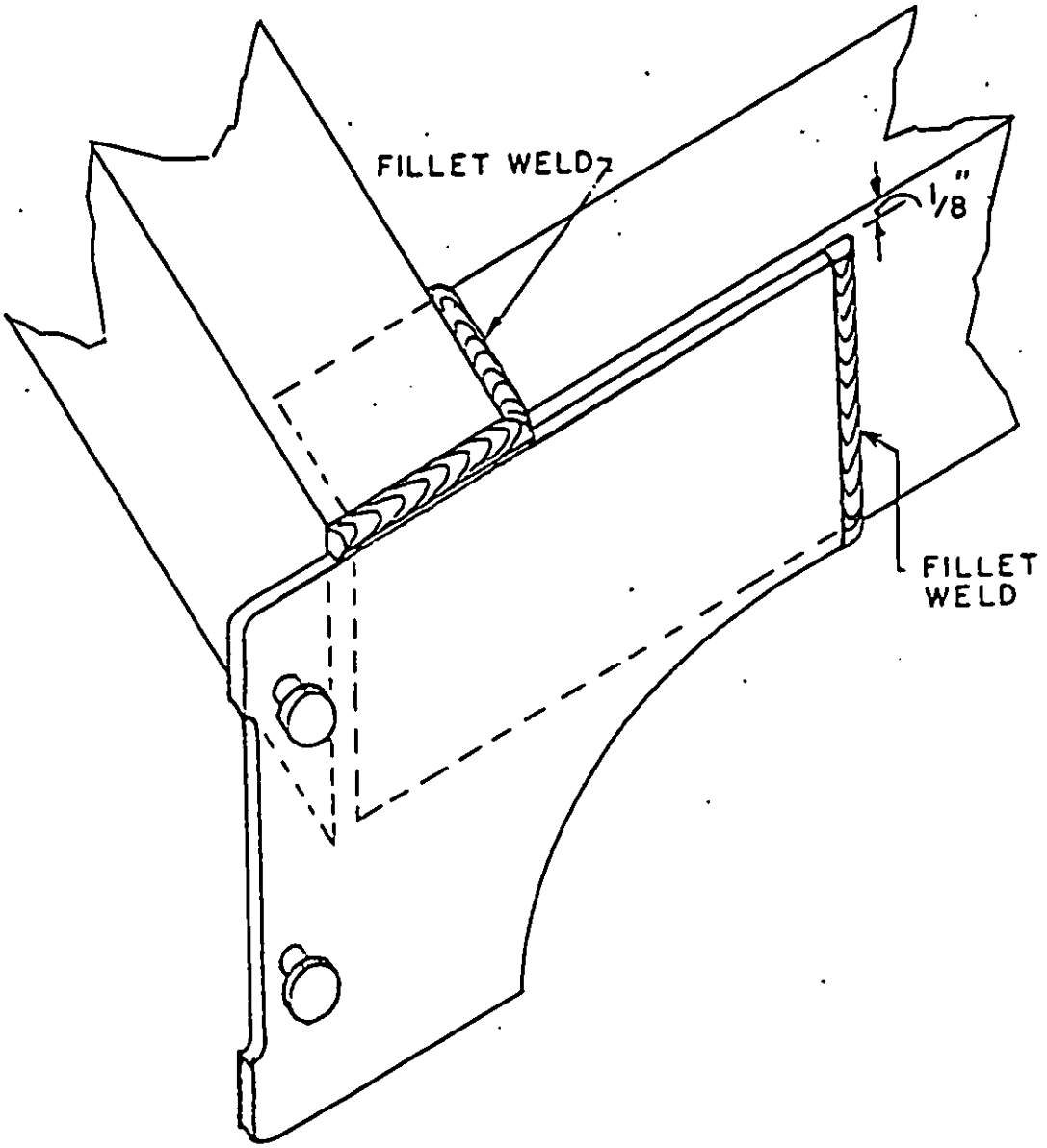

FIGURE 10. Spring frame welding (top view).

Downloaded from http://www.everyspec.com

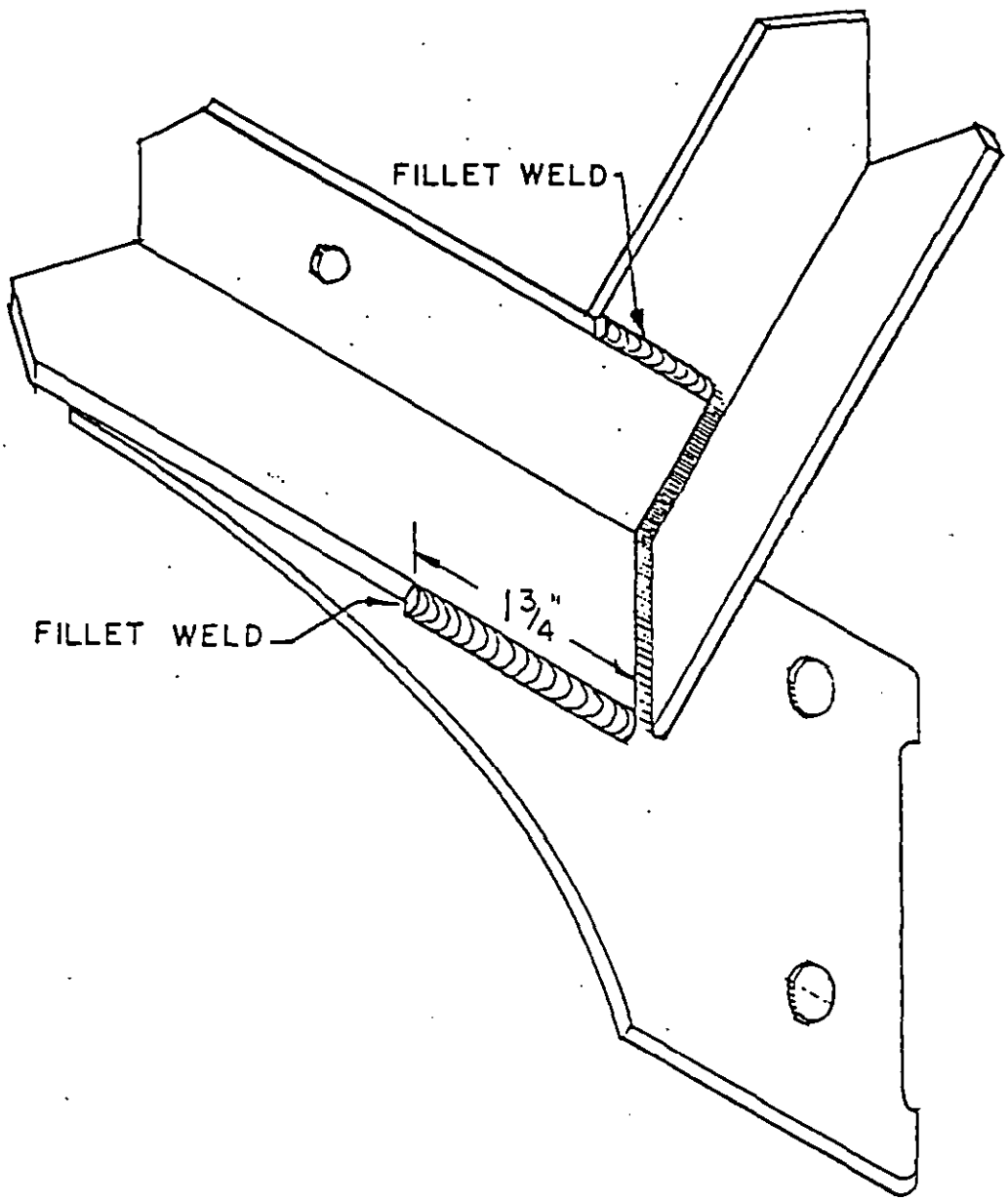

FIGURE 11. Spring frame welding (bottom view).

Downloaded from http://www.everyspec.com

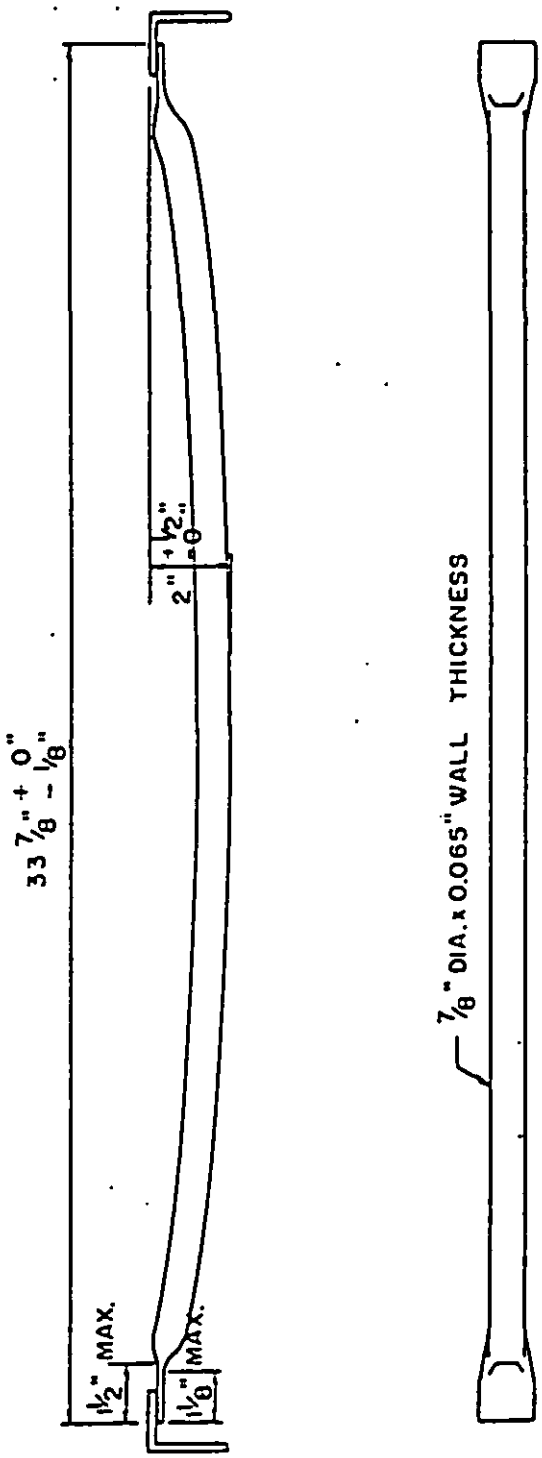

FIGURE 12. Stretcher brace.

Downloaded from http://www.everyspec.com

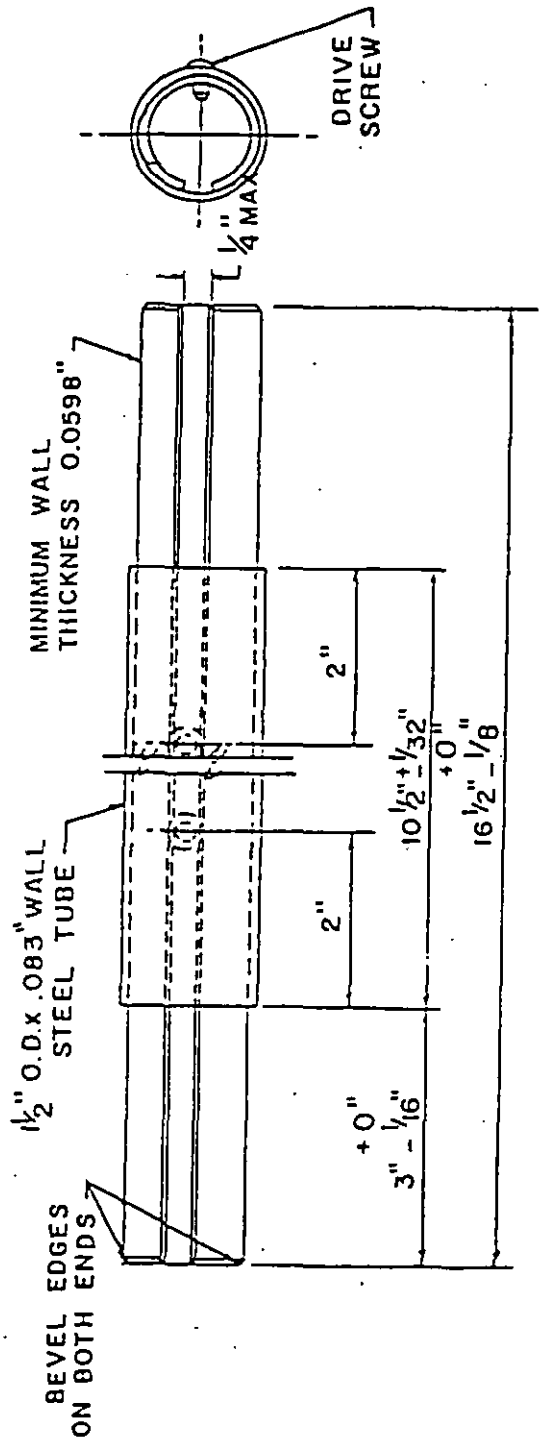

FIGURE 13. Adapter for conversion from single to double-deck bed.

Downloaded from http://www.everyspec.com

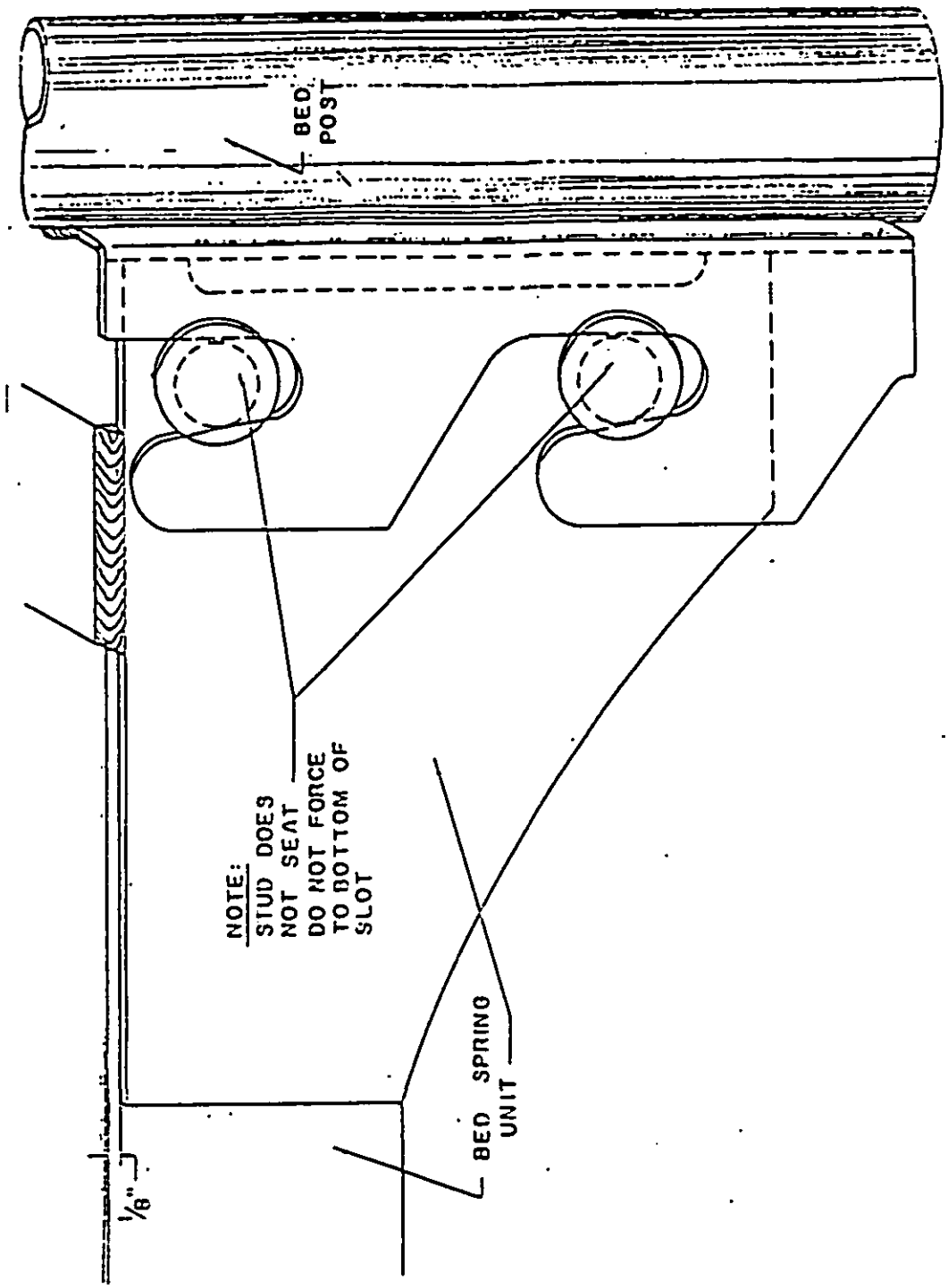

FIGURE 14. Corner lock.

Downloaded from http://www.everyspec.com

STANDARDIZATION DOCUMENT IMPROVEMENT PROPOSAL

(See Instructions – Reverse Side)

1. DOCUMENT NUMBER
MIL-B-15228G

2. DOCUMENT TITLE MILITARY SPECIFICATION – BED, BUNK, STEEL, ROUND TUBE, SINGLE AND DOUBLE-DECK (CONVERTIBLE TYPE)

3a. NAME OF SUBMITTING ORGANIZATION

b. ADDRESS *(Street, City, State, ZIP Code)*

4. TYPE OF ORGANIZATION *(Mark one)*

- ☐ VENDOR
- ☐ USER
- ☐ MANUFACTURER
- ☐ OTHER *(Specify)*: _____

5. PROBLEM AREAS

a. Paragraph Number and Wording:

b. Recommended Wording:

c. Reason/Rationale for Recommendation:

6. REMARKS

7a. NAME OF SUBMITTER *(Last, First, MI)* – Optional

b. WORK TELEPHONE NUMBER *(Include Area Code)* – Optional

c. MAILING ADDRESS *(Street, City, State, ZIP Code)* – Optional

8. DATE OF SUBMISSION *(YYMMDD)*

DD FORM 82 MAR 1426

PREVIOUS EDITION IS OBSOLETE.