MIL-B-12672(ORD)
4 May 1953
SUPERSEDING (in part)
Army 57-208-1
23 November 1949

MILITARY SPECIFICATION

BRAZE-WELDING, OXYACETYLENE; OF BUILT-UP METAL STRUCTURES

1. SCOPE

1.1 This specification applies to the oxy-acetylene braze-welding of built-up metal structures fabricated either from ferrous or nonferrous base metal or combination thereof as accomplished by the use of suitably qualified flux and filler metal.

2. APPLICABLE SPECIFICATIONS, STANDARDS, DRAWINGS AND OTHER PUBLICATIONS

2.1 The following specifications and standards, of the issue in effect on the date of invitation for bids, form a part of this specification.

SPECIFICATIONS

FEDERAL

QQ-M-151	Metals; General Specification for Inspection of

MILITARY

MIL-W-12683	Welding; Joint Design, Data for

STANDARDS

MILITARY

JAN-STD-19	Welding; Symbols
MIL-STD-20	Welding; Terms and Definitions

(Copies of specifications and standards required by contractors in connection with specific procurement functions should be obtained from the procuring agency or as directed by the contracting officer. Both the title and identifying number or symbol should be stipulated when requesting copies.)

3. REQUIREMENTS

3.1 Contractor's recorded procedure for braze-welding joint. (See 6.3 and App. A.)

3.1.1 General requirements. - Prior to production of any structure, the contractor shall prepare a drawing or sketch of the structure showing the location of each joint to be welded, and shall establish the braze-welding procedure required to cover all welding to be performed under this specification.

3.1.2 Form and contents. - Each contractor's recorded braze-welding procedure shall contain a reference to the location of the joint as shown in the drawing, a detailed cross-section of the joint, the factors listed in table I for the type of welding being performed, and shall be in accordance with a form approved by the chief of the supply service involved.

3.1.3 Review. - Before starting qualification of procedures and welders for the welding of joints under this specification, recorded braze-welding procedures and drawings (see 3.1.1 and 3.1.2) shall be submitted in duplicate for review through the contracting officer to the chief of the supply service involved.

3.2 Procedure qualification. - All braze-welding performed on structures shall be in accordance with the welding procedure which has been qualified by the contractor as specified in 4.2. When a major change has been made in any factor included in the qualified welding procedure, the procedure shall be requalified as indicated in table I.

3.3 Welder qualification. - Only welders qualified by the contractor in accordance with the requirements of 4.2.2 of this specification shall be permitted to weld on structures being fabricated under this specification. When a major change has been made in any factor included in the qualification welding procedure, the welder shall be requalified as indicated in table I.

3.4 Procedure control. -

3.4.1 Gas pressure. - Each gas line serving each torch shall be so fitted with a direct-reading pressure gage that the pressure on each line may be determined at any time.

TABLE I

OXY-ACETYLENE BRAZE-WELDING PROCEDURE FACTORS AND REQUIREMENTS FOR REQUALIFICATION

Procedure Factor	When Factor is Changed, Welding Procedure to be Revised and Requalified as Indicated	When Factor is Changed, Operator to be Requalified as Indicated
1. Composition of base metal.	Yes: For change of basic type of base metal, i.e. Ferrous to Nonferrous or Vice Versa.	Yes: For change requiring procedure requalification
2. Thickness of base metal.	Yes: For change outside the range of thickness for which qualified.	No.
3. Type of joint (including dimensions and tolerances thereof.)	Yes: For any change in joint type.	Yes: For change requiring procedure requalification.
4. Filler metal (Class or type)	Yes: For change of class or type.	Yes: For change of type.
5. Filler-metal form (wire, rod, strip, granular).	Yes: For change of form.	No.
6. Flux (brand or type).	Yes: For change of brand or type or for addition or elimination of use of flux.	No.
7. Holding Fixtures	Yes: For any change in the type of fixtures used to hold parts in place during welding operation which produces a difference in clamping either in direction or force applied.	No.
8. Size of torch tip. (Torch style, model No., or mfr.)	Yes: For changes in tip size exceeding one size as manufactured by the same manufacturer.	No.
9. Number of flame tips	Yes: For changes in the number of tips being used from that qualified.	No.
10. Gas pressure	Yes: With each tip size qualified, when the pressure used varies more than plus or minus 10% from the average used for each diameter qualified.	No.
11. Type of Flame (neutral, oxidizing or reducing).	Yes: For any change of flame type.	Yes: For any change requiring procedure requalification.
12. Method of cleaning joint surfaces.	Yes: When method is changed from that used when qualified.	No.

3.5 Dimensions. - The contractor shall furnish structures which will finish to the dimensions shown in the drawings within the tolerances shown thereon without further straightening.

3.6 Base-metal preparation. - All metal surfaces that are to be welded shall be smooth and free from grease, oil, dirt, or any other material which might have a harmful effect on the welded joint.

3.7 Repairs. - Structures rejected because of unacceptable soundness conditions may be repaired and shall then comply with the applicable requirements of this specification.

3.8 Soundness. - (See 6.2)

3.8.1 Pressure tightness. - When tightness from either external or internal pressure is required of welded joints, they shall withstand the pressure specified by the contracting officer for the procedure qualification samples.

3.8.2 Mechanical properties of welded joints. - When mechanical properties are required of welded joints, they shall meet the requirements specified by the contracting officer.

3.8.3 Visible characteristics. - The appearances of all welded joints shall be equal to or better than that shown by acceptable workmanship specimens selected in accordance with 4.2.1.1.

4. SAMPLING, INSPECTION, AND TEST PROCEDURES

4.1 General. - Inspection and test shall be in accordance with QQ-M-151.

4.1.1 Repair inspection. - All braze-welded structures requiring repair after inspection shall be reinspected after the repair have been completed to determine compliance with the applicable requirements.

4.1.2 Data forms. - A complete record of each inspection shall be made on forms provided by the contractor and approved by the contracting officer. These forms shall provide spaces for all pertinent data relating to identification of welded structures, defects found, and repairs made.

4.2 Qualification tests. -

4.2.1 Qualification of braze-welding procedure. - Unless otherwise specified, the qualification test of welding procedures to be used in the manufacture of braze-welded structures under this specification shall consist of the making of at least three of each type of structure that is to be manufactured in production using the same type of materials and the same welding technique that is to be used in production. They shall be as specified in 4.2.2.5.

4.2.1.1 Workmanship specimens. - One of each type of structure to be manufactured shall be selected by the inspector from the acceptable procedure qualification test specimens as a workmanship specimen. These specimens shall be available to the inspector for examination at all times.

4.2.1.2 Information furnished. - The welding procedure used for procedure qualification test specimens shall be reported to the inspector in writing. Symbols and terms used shall conform to JAN-STD-19 and MIL-STD-20, while joint designs shall conform to MIL-W-12683.

4.2.2 Qualification of welders.

4.2.2.1 Contractor's responsibility. Each welder shall be qualified by the contractor. Qualification of a welder by one contractor shall not serve as qualification when the welder is employed by another contractor.

4.2.2.2 Qualification tests. - The welder qualification test shall consist of the making of one of each type of structure that is to be manufactured by the welder in work being done under the contract using the welding procedure that has been qualified as specified in 4.2.

4.2.2.3 Retest specimens. - Any welder who fails to qualify on the first test shall, upon the request of the contractor, be allowed to repeat the test once as soon as practicable. In case of a second failure to qualify, the welder shall not be allowed to repeat the test within one month unless authorized by the contracting officer.

4.2.2.4 Requalification. - A welder who has been properly qualified for braze-welding under any given welding procedure by a contractor usually may not be required to requalify for that procedure unless:

(1) He has done no braze-welding for a period of three months or more,
or
(2) He is employed by a different contractor, or
(3) Inspection of his work shows that he is not producing acceptable results.

4.2.2.5 Tests of qualification samples. -

4.2.2.5.1 Pressure tightness. - When pressure tightness is required of the joints being welded under the contract, the qualification test specimens shall be subjected to such pressure tests as may be specified or approved by the contracting officer. The amount of pressure used to test the specimens shall be as specified by the contracting officer.

4.2.2.5.2 Mechanical tests. - When mechanical properties are required of the joints being welded under the contract, the qualification test specimens shall be subjected to such mechanical test as may be required by the contracting officer to demonstrate that the required mechanical properties are obtained.

4.3 Tests of production parts. -

4.3.1 Visual inspection. - Unless otherwise specified, all welded structures shall be visually inspected for compliance with the requirements of 3.8.3.

4.3.2 Pressure test. - Unless otherwise specified, when braze-welded structures built under this specification are subject to pressure tests, the procedure used shall be as specified by the contracting officer for the procedure qualification samples. The number of production structures tested shall be as specified by the contracting officer.

4.3.3 Mechanical tests. - Unless otherwise specified, when braze-welded structures built under this specification are subject to mechanical tests, the procedure used shall be as specified by the contracting officer for the procedure qualification samples. The number of production structures tested shall be as specified by the contracting officer.

4.3.4 Reinspection of repairs. - When braze-welded structures require repair after the inspection provided for in 4.3.1, 4.3.2, and 4.3.3, they shall be submitted for reinspection after the repairs have been completed to determine compliance with 3.7.

4.4 Marking to designate repairs and indicate acceptance. - The system of marking used to designate repairs and to indicate acceptance shall be subject to the approval of the inspector.

5. PREPARATION FOR DELIVERY

5.1 Shipping. - The shipping of test weldments shall be made as required in the course of qualification.

5.1.1 Packing. - Packing shall be such as to insure acceptance by common or other carrier for safe transportation at the lowest rate to the point of delivery.

5.1.2 Marking. - Each shipping container shall be clearly and indelibly marked with the name, brand or trademark of the contractor, the contract or order number, and such other marking as may be specified by the contracting officer.

6. NOTES

6.1 Intended use. - This specification is intended to cover a process of welding whereby a groove, fillet, plug or slot weld is made using a nonferrous filler metal having a metal point below that of the ferrous or nonferrous base metals but above 800°F. The filler in this method is not distributed in the joint by capillary action as can be noted from the studies shown in the figures attached to Appendix A of the specification.

6.2 Soundness. - The soundness of welded joints may be determined by radiographic inspection if required by the contracting officer. If this method is used, a careful consideration should be given to the function the part is to perform in service. When parts are to be subjected to either internal or external pressure in service, the service pressure should be taken into account in determining the pressure to be used in testing sample parts. The test pressure should usually be not less than twice the maximum working pressure, but never sufficient to exceed the yield point of the base metal. A hydrostatic test has been found to be very useful in determining the pressure tightness of welded joints. A mechanical test is perhaps the simplest type to apply if the nature of the part lends itself to such a test. The type of mechanical test used should simulate as nearly as possible the type of mechanical stresses that the parts are likely to undergo in service.

6.3 Sample recorded braze welding procedure. - (See Appendix A.) It is emphasized that forms and arrangements shown herein represent suggestions only. Other forms or variation of these forms will be acceptable, provided they contain all the required information and provided the information is conveyed in a readily understandable manner.

6.3.1 Data fictitious. - The question is likely to arise as to how much of the material shown in Appendix A is the contractor at liberty to adopt. He may adopt the forms illustrated, but he will not be able to use the data shown, since these data are purely fictitious and are intended to illustrate only how the forms are to be filled in and what information should be furnished.

6.3.2 Character of illustrations. - A sketch or drawing (sheet 2, App. A) need be no more than a penciled outline using clear references to the joints; but it should be representative of the built-up structure to be manufactured, showing adequately the location of joints. (See sheets 4 and 5 of App. A).

NOTICE. - When Government drawings, specifications, or other data are used for any purpose other than in connection with a definitely related Government procurement operation, the United States Government thereby incurs no responsibility nor any obligation whatsoever; and the fact that the Government may have formulated, furnished, or in any way supplied the said drawings, specifications, or other data is not to be regarded by implication or otherwise as in any manner licensing the holder or any other person or corporation, or conveying any rights or permission to manufacture, use or sell any patented invention that may in any way be related thereto.

CUSTODIAN:
Army-Ordnance Corps

OTHER INTERST
Army - CEQT

DF (max) - 40% (≤90V) or 90% (>90V).

Torque test - Not applicable

Appendix A
Sheet 1 of 5

RECORDED BRAZE-WELDING PROCEDURE

FOR

DESIGN NO. T19

70-cu.ft. Purifying Unit

MODEL M4B

Intake Pipe

Manufactured by:

Allmore Mfg. Co.

Located at:

Norwalk, Mass.

Date of submittal 5 June 1945

Signed for company:

Joseph L. Smith
Joseph L. Smith
Eng.

Manufactured under:

Military Specification

MIL-B-12672(ORD)

CONTENTS:

FOR ILLUSTRATION ONLY

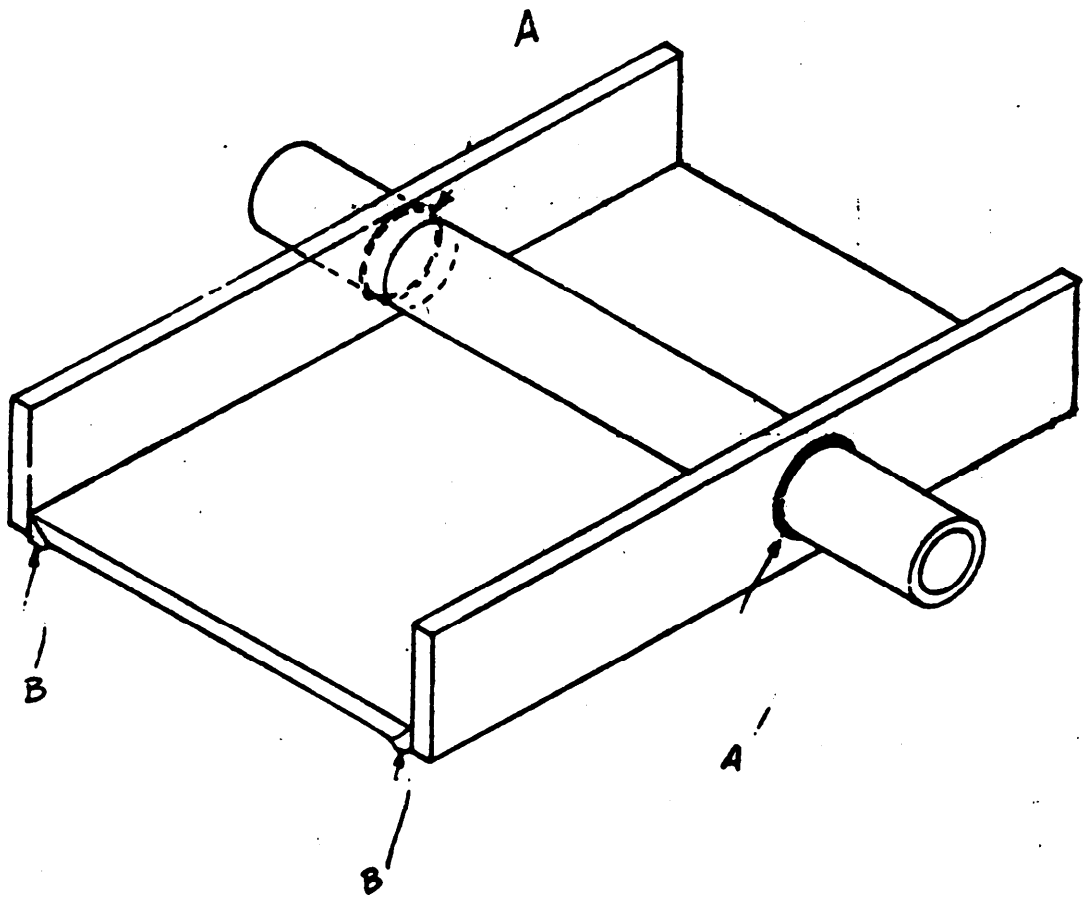

SKETCH SHOWING LOCATION OF BRAZE-WELDED JOINTS
PART NO. 67980

(For details, see sheets 3, 4, & 5)

FOR ILLUSTRATION ONLY

SUMMARY

I. Material Types

Reference Designation	Type of Material
A	Monel Metal
B	Copper

II. Filler Metal

Reference Designation	Mfgr.	Brand Name	Qualified Under Specification	Type	Class
X	Boston Bronze Co.	Hyperstrength	C-876	III	1
Y	BEB Weld Material	Statuff	C-959	V	2

III. Heating Factors

Filler Metal Dimensions	Torch Tip Size	Gas Pressure	Flame Type
1/8" dia. rod X	1/16"	50 lbs./sq.in.	Neutral
3/16" dia. rod Y	3/32"	60 lbs./sq.in.	Reducing

FOR ILLUSTRATION ONLY

MILITARY
SPECIFICATION
MIL-B-12672(ORD)

Braze-welding Procedure
Record No. 1
Joint A
Date 5 June 1955
Revision 1

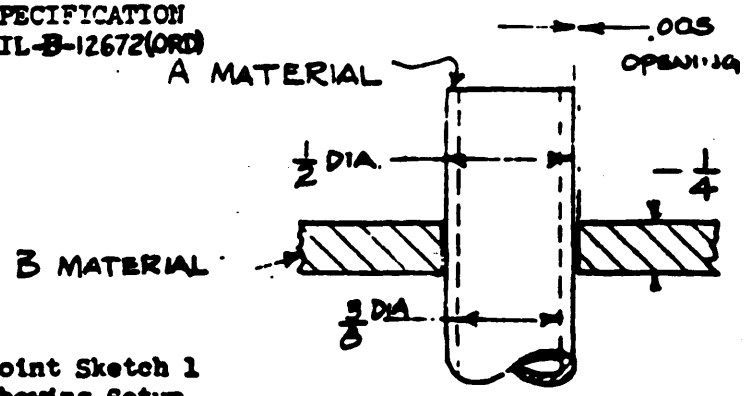

Joint Sketch 1
Showing Setup

1. Torch Tip Size 1/16" Gas Pressure 50 lbs./sq.in.
2. Flame Type Neutral
3. Joint Preparation None
4. Flux Surebraze
5. Filler-Metal Reference Designation X Dimension 1/8" dia. rod
6. Method of Joining Braze-welding
7. Position of Welding Flat

JOINT SKETCH SHOWING FINISHED BRAZE-WELD

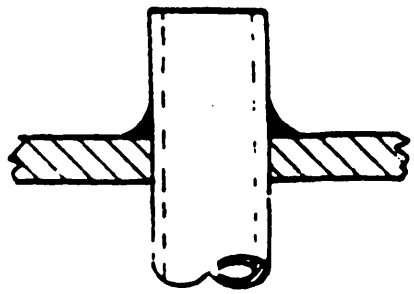

FOR ILLUSTRATION ONLY

MILITARY
SPECIFICATION
MIL-B-12672(ORD)

Braze-welding Procedure
Record No. 2
Joint B
Date 5 June 1945
Revision No. 1

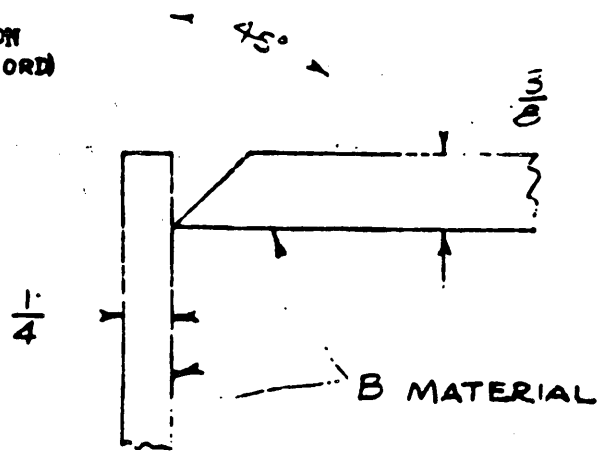

Joint Sketch 1
Showing Setup

1. Torch Tip Size 3/32" Gas Pressure 60 p.s.i.
2. Flame Type Reducing
3. Joint Preparation Grind scarf
4. Flux Neverfail No. 2
5. Filler Metal Y Dimension 3/16" dia. rod
6. Method of Joining Braze-welding
7. Position of Welding Flat

Joint Sketch 2
Showing Finished Braze-weld

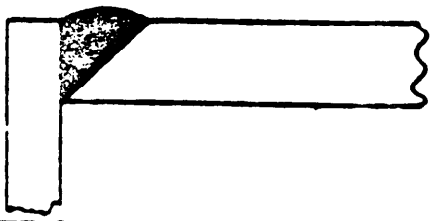

FOR ILLUSTRATION ONLY

INSTRUCTIONS: In a continuing effort to make our standardization documents better, the DoD provides this form for use in submitting comments and suggestions for improvements. All users of military standardization documents are invited to provide suggestions. This form may be detached, folded along the lines indicated, taped along the loose edge *(DO NOT STAPLE)*, and mailed. In block 5, be as specific as possible about particular problem areas such as wording which required interpretation, was too rigid, restrictive, loose, ambiguous, or was incompatible, and give proposed wording changes which would alleviate the problems. Enter in block 6 any remarks not related to a specific paragraph of the document. If block 7 is filled out, an acknowledgement will be mailed to you within 30 days to let you know that your comments were received and are being considered.

NOTE: This form may not be used to request copies of documents, nor to request waivers, deviations, or clarification of specification requirements on current contracts. Comments submitted on this form do not constitute or imply authorization to waive any portion of the referenced document*(s)* or to amend contractual requirements.

(Fold along this line)

(Fold along this line)

DEPARTMENT OF THE ARMY

NO POSTAGE NECESSARY IF MAILED IN THE UNITED STATES

OFFICIAL BUSINESS
PENALTY FOR PRIVATE USE $300

BUSINESS REPLY MAIL
FIRST CLASS PERMIT NO. 12062 WASHINGTON D. C.
POSTAGE WILL BE PAID BY THE DEPARTMENT OF THE ARMY

Commanding Officer
US Army Munitions Command
Attn: SMUFA-5500
Philadelphia, PA 19137

(TO DETACH THIS FORM, CUT ALONG THIS LINE.)

STANDARDIZATION DOCUMENT IMPROVEMENT PROPOSAL

(See Instructions – Reverse Side)

1. DOCUMENT NUMBER

2. DOCUMENT TITLE

3a. NAME OF SUBMITTING ORGANIZATION

4. TYPE OF ORGANIZATION *(Mark one)*

- ☐ VENDOR
- ☐ USER
- ☐ MANUFACTURER
- ☐ OTHER *(Specify)*: _____

b. ADDRESS *(Street, City, State, ZIP Code)*

5. PROBLEM AREAS

a. Paragraph Number and Wording:

b. Recommended Wording:

c. Reason/Rationale for Recommendation:

6. REMARKS

7a. NAME OF SUBMITTER *(Last, First, MI)* – Optional

b. WORK TELEPHONE NUMBER *(Include Area Code)* – Optional

c. MAILING ADDRESS *(Street, City, State, ZIP Code)* – Optional

8. DATE OF SUBMISSION *(YYMMDD)*

DD FORM 1426, 82 MAR

PREVIOUS EDITION IS OBSOLETE.