MIL-A-9094/4A
10 October 1974
SUPERSEDING
MIL-A-9094/4
23 October 1973

MILITARY SPECIFICATION SHEET

ARRESTER, LIGHTNING (AIRCRAFT)

This specification is approved for use by all Departments and Agencies of the Department of Defense.

(A) The complete requirements for procuring the Lightning Arrester described herein shall consist of this document and MIL-A-9094C, 3 September 1958.

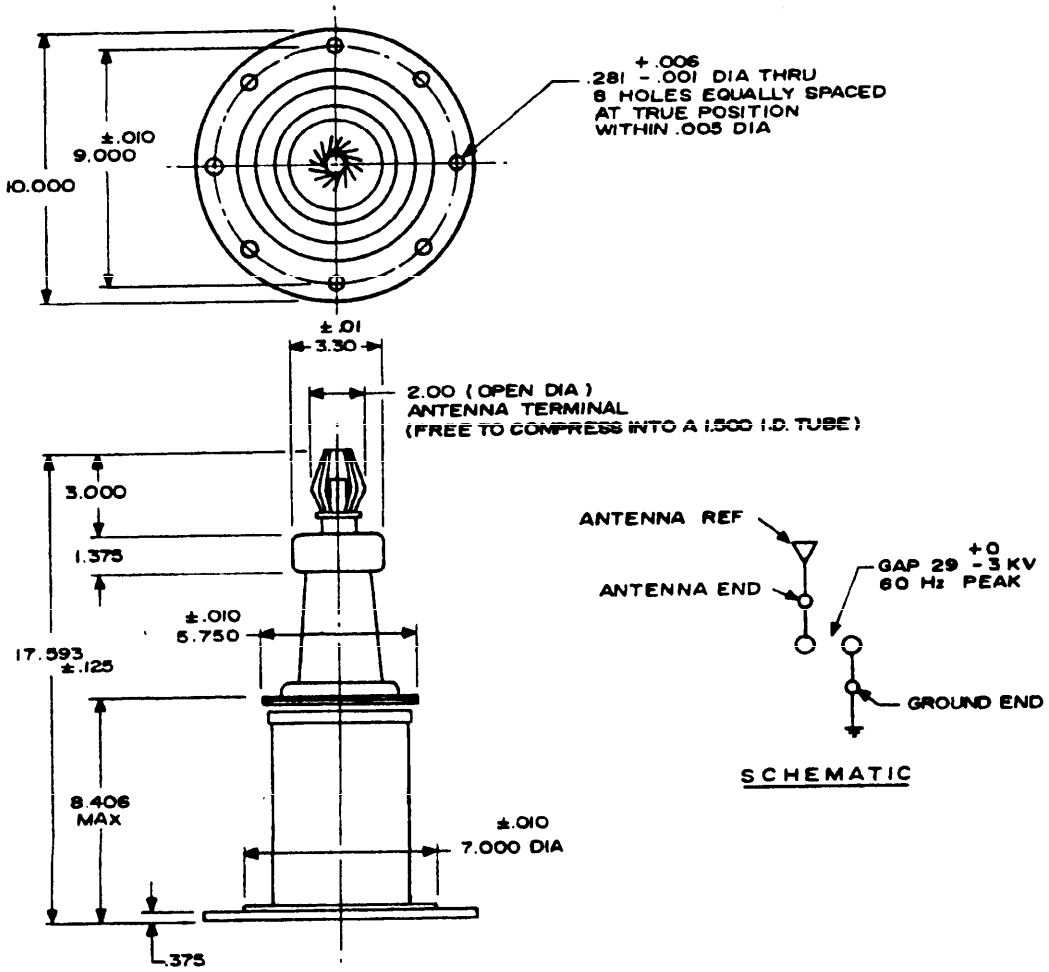

NOTES:

1. Dimensions are in inches. Unless otherwise specified, tolerances are ±.047
2. Caution - Not to be used for solid state circuit protection. The equipment connected to this arrester must have a DC path to ground.

(A) Denotes changes

FSC 5920

REQUIREMENTS:

Design and Construction:

Design, construction, and performance shall be compatible for use with VLF.

Maximum Weight - 15.3 pounds

Connectors - The arrester equipment connector shall be compatible for use with and provide locking means for the antenna mast coupler.

Lightning Stroke Indication - Not required.

Altitude Range - 0 - 15,000 ft operating, 0 - 70,000 ft storage.

Ambient Temperature Range - Operating -54° C to + 71° C, storage -62° C to +95° C.

Mounting Attitude - Not applicable.

Electrical:

Spark Gap Breakdown Voltage - 29 $^{+0}_{-3}$ kilovolt 60 Hz peak.

Series Capacitor Value - Not applicable.

Bleeder Resistor - Not applicable.

Shunt Capacitance - No greater than 18 picofarads.

Radio Frequency Current - Not applicable.

Lightning Stroke - Per MIL-A-9094 except 6 strokes with no change in breakdown voltage (29 $^{+0}_{-3.0}$ kV), 6 additional strokes without arrester component failure.

Environmental:

The arresters shall be capable of meeting the requirements of this specification subsequent to subjection to the following environmental tests.

Sand and Dust - The arresters shall be subjected to sand and dust tests in accordance with MIL-STD-202, Method 110, Test Condition A.

Salt Spray - The arresters shall be subjected to salt spray tests in accordance with MIL-STD-202, Method 101, Test Condition B.

Vibration - The arresters shall be subjected to vibration tests in accordance with MIL-STD-202, Method 201.

Thermal Shock - The arresters shall be subjected to thermal shock tests in accordance with MIL-STD-202, Method 107, Test Condition B except Step 3 shall be +95 ±3° C. There shall be no physical damage to the arrester as a result of this test.

Shock (specified pulse) - The arresters shall be subjected to shock tests in accordance with MIL-STD-202, Method 213, Test Condition G, for a total of 18 shocks.

Seal - The arresters shall be subjected to seal tests in accordance with MIL-STD-202, Method 112, Test Condition C, Procedure 1.

Humidity - The arresters shall be subjected to humidity tests in accordance with MIL-STD-202, Method 103, Test Condition B.

Resistance to Solvents - The arresters shall be subjected to resistance to solvents test in accordance with MIL-STD-202, Method 215. No deterioration of markings or finishes or electrical or mechanical damage is permissible.

Barometric Pressure (reduced) (altitude) - The arresters shall be tested in accordance with MIL-STD-202, Method 105, Test Condition C. There shall be no physical damage to the arresters as a result of this test.

General Note - Under all of the environmental tests, if there are any exceptions to the test called out in MIL-STD-202, they shall be listed following the requirement. This specification is for procurement only of existing design, which has not been updated. Not recommended for new design or application.

Part No. M9094/4-001

Cross Reference Data -

MIL Part No	FSCM (74994)	FSCM (13499)
M9094/4-001	P/N 1920-03	P/N 013-1319-010

Custodians:
Air Force - 85
Navy - AS
Army - EL

Reviewer Activities:
Air Force - 11, 80
Navy
Army

Preparing Activity:
Air Force - 85

(Project No. 5920-0343-04)

STANDARDIZATION DOCUMENT IMPROVEMENT PROPOSAL

OMB Approval No. 22-R255

INSTRUCTIONS: The purpose of this form is to solicit beneficial comments which will help achieve procurement of suitable products at reasonable cost and minimum delay, or will otherwise enhance use of the document. DoD contractors, government activities, or manufacturers/vendors who are prospective suppliers of the product are invited to submit comments to the government. Fold on lines on reverse side, staple in corner, and send to preparing activity. Comments submitted on this form do not constitute or imply authorization to waive any portion of the referenced document(s) or to amend contractual requirements. Attach any pertinent data which may be of use in improving this document. If there are additional papers, attach to form and place both in an envelope addressed to preparing activity.

DOCUMENT IDENTIFIER AND TITLE

MIL-A-9394/4A Arrester, Lightning (Aircraft)

NAME OF ORGANIZATION AND ADDRESS

CONTRACT NUMBER

MATERIAL PROCURED UNDER A

☐ DIRECT GOVERNMENT CONTRACT ☐ SUBCONTRACT

1. HAS ANY PART OF THE DOCUMENT CREATED PROBLEMS OR REQUIRED INTERPRETATION IN PROCUREMENT USE?

A. GIVE PARAGRAPH NUMBER AND WORDING

B. RECOMMENDATIONS FOR CORRECTING THE DEFICIENCIES

2. COMMENTS ON ANY DOCUMENT REQUIREMENT CONSIDERED TOO RIGID

3. IS THE DOCUMENT RESTRICTIVE?

☐ YES ☐ NO *(If "Yes", in what way?)*

4. REMARKS

SUBMITTED BY *(Printed or typed name and address - Optional)*

TELEPHONE NO.

DATE

DD FORM 1 JAN 72 1426

REPLACES EDITION OF 1 JAN 68 WHICH MAY BE USED

C16061

FOLD

OFFICIAL BUSINESS
PENALTY FOR PRIVATE USE $300

POSTAGE AND FEES PAID
DEPARTMENT OF THE AIR FORCE
DoD-318

AFLC/MMQE/Standardization
Wright-Patterson AFB OH 45433

FOLD