MILITARY SPECIFICATION

ANTENNAS, LIAISON COMMUNICATIONS EQUIPMENT, GENERAL SPECIFICATION FOR DESIGN OF

1. SCOPE

1.1 This specification covers the performance requirements for the design of airborne antennas for use with liaison communication equipment, including the furnishing of engineering reports.

2. APPLICABLE SPECIFICATIONS

2.1 The following specifications, of the issue in effect on the date of invitation for bids, shall form a part of this specification to the extent specified herein:

SPECIFICATIONS:

Military:

MIL-C-71	Connectors "N" For Radio Frequency Cables
MIL-C-3608	Connectors, "BNC", For Radio Frequency Cables
MIL-E-5400	Electronic Equipment, Airborne, General Specification For
MIL-R-6471	Radio Set AN/ARC-21
MIL-P-7094	Plastic Parts, Aircraft Exterior, General Requirements and Tests for Rain-Erosion Protection of
MIL-P-8013	Plastic Materials, Glass Fabric Base, Low Pressure Laminated, Aircraft Structural
MIL-P-9041	Plastic Material, Molded Sandwich Construction, Glass Fabric Base, Honeycomb Core, For Aircraft Structural Applications
MIL-A-9094	Arrester, Lightning, Integral Antenna
MIL-T-9107	Test Reports, Preparation Of

(Copies of specifications required by contractors in connection with specific procurement functions should be obtained from the procuring agency or as directed by the contracting officer.)

3. REQUIREMENTS

3.1 General.- The requirements, including material and workmanship, specified in Specification MIL-E-5400 are applicable as requirements of this specification.

3.2 Design. The antenna specified herein is to be installed during or after manufacture of the aircraft or as an integral part of the aircraft structure. The antenna is to be used with Radio Set AN/ARC-21 ( ) and may be in physical combination with any other antenna, thus serving two or more equipments. If the antenna is made in combination with another antenna or antennas it shall be possible to operate the equipments simultaneously (in a receiving or transmitting condition) and with no interference, one with the other. The antenna shall be supplied together with the necessary transmission lines, connectors, isolation units, liaison matching network, and filters.

3.2.1 Mechanical.

3.2.1.1 General. The antenna shall consist of an isolated aircraft structure such as a wing tip or vertical stabilizer tip, shunt fed element, notch or other system suitable for installation in aircraft and consistent with the position in which it is to be mounted.

3.2.1.2 Preferred Antenna Configurations. The following basic antenna configurations, listed in order of their preference, are desirable from the standpoint of obtaining a standard coupler of the type now being produced: (see paragraph 6.3)

(a) Isolation of the top portion of the vertical stabilizer.

(b) Isolation of either wing-tip.

If an antenna configuration is proposed which would require the development of a different antenna coupler than the one being produced, the contractor shall demonstrate to the satisfaction of the contracting officer that the proposed antenna is the only design suitable for installation on the aircraft in question or that it is much superior to any other design.

3.2.1.3 Collection of Liquids. The antenna shall be so designed and installed that no water or other liquid can collect in any portion of the antenna when the aircraft is on the ground or in flight.

3.2.1.4 Icing. The antenna shall be constructed to withstand the most severe icing conditions encountered in flight. The antenna shall be designed to minimize undesirable performance effects due to icing.

3.2.1.5 Dielectric Material. The contractor shall submit a process specification in accordance with Specification MIL-P-8013 or Specification MIL-P-9041, covering the manufacturing and fabricating process and methods of control of manufacturing variables of any plastic material used in the construction of the antenna. This process specification shall be in addition to any approved general process specification the contractor may now have and shall be subject to the approval of the Procuring Agency.

3.2.1.5.1 Erosion Resistance. Plastic materials used in the fabrication of any part of the antenna shall meet the resistance to rain erosion requirements of Specification MIL-R-7094 or all exterior plastic parts shall be protected with an erosion resistant material so that the combination shall meet the requirements of Specification MIL-P-7094 and Specification MIL-P-8013.

3.2.1.5.2 External Radii of Curvature (Cap Type Antennas). The conducting portion of the antenna structure shall be designed to provide large, smooth radii of curvature on all external edges and corners, to reduce precipitation static caused by DC corona discharges. If sharp trailing edges and corners are required for aerodynamic reasons, the airfoil may be completed by insulating material attached to the metal of the antenna structure. Radii of curvature of the antenna metal shall not be less than one half inch.

3.2.2 Electrical:

3.2.2.1 General. The antenna system shall be designed to operate satisfactorily over the frequency range from 2 to 24 megacycles per second and to receive and transmit radio communication signals essentially omnidirectional in azimuth.

3.2.2.2 Antenna System Efficiency. The antenna system efficiency of the proposed antenna (see paragraph 6.4.1) shall be determined for the following frequencies: 6, 8, 10, 12, 14, 16, 18, 20, 22 and 24 megacycles per second. The antenna system efficiency shall be at least 50 percent of the antenna system efficiency for the reference antenna (specified in 4.3.2 of this specification) at each of the above frequencies. The average of the antenna system efficiencies at the above frequencies for the proposed antenna shall be no less than that for the reference antenna.

3.2.2.3 Power Transfer Efficiency. The power transfer efficiency of the proposed antenna system (see paragraph 6.4.2) shall be no less than 25 percent at any frequency below 6 megacycles and above 2 megacycles per second. The average power transfer efficiency over the frequency range of 2 megacycles per second to 6 megacycles per second shall be at least 60 percent. Those frequencies within the above range, for which the length of the path from the top of the vertical stabilizer along the front of the fin and top centerline of the aircraft to the leading edge of the wing root and thence along the wing leading edge to the tip is less than 0.25 wavelengths, shall not apply.

3.2.2.4 Antenna Matching Unit:

3.2.2.4.1 General. An impedance matching unit shall be provided to transform the antenna impedance to a value that will give a voltage standing wave ratio of 2 to 1, or less, on the 50 ohm coaxial transmission line between the transmitter and the antenna. The contractor shall prepare a specification covering the detail requirements for a satisfactory impedance matching unit. If at all possible, the matching unit referred to in paragraph 6.3 shall be used. The specification shall be subject to the approval of the Procuring Agency.

3.2.2.4.2 Matching Unit Efficiency.- The power transfer efficiency of the matching unit (see paragraph 6.4.3) shall be the highest obtainable consistent with good engineering practice.

3.2.2.4.3 Impedance Matching Ability.- The matching unit shall be capable of automatically matching the antenna impedance including the tolerance specified in 4.4.2.5, using only the information provided by the radio transmitter, and within a time limit not to exceed 10 seconds.

3.2.2.4.4 Voltage Standing Wave Ratio.- The design and installation of the antenna and matching unit shall be such that the voltage standing wave ratio produced on any part of the coaxial cable between the transmitter and the antenna matching unit shall not exceed 2 to 1 when the liaison equipment is transmitting at any frequency within the 2 to 24 megacycles per second range.

3.2.2.5 Lightning Protection.- The antenna shall be provided with a lightning arrester, designed in accordance with Specification MIL-A-9094 to protect the antenna and associated equipment from damage due to lightning strokes.

3.2.2.6 Rf Corona and Voltage Breakdown.- The proposed antenna shall be so designed that no evidence of corona or voltage breakdown shall occur at the maximum altitude of the aircraft when a voltage 50 per cent in excess of the maximum calculated peak voltage is applied across the antenna input terminals. The maximum peak voltage shall be based on the maximum peak modulated power delivered to the antenna terminals at the frequency where the impedance is such that the gap voltage is greatest.

3.2.2.7 Transmission Line and Connectors.- The antenna shall be so designed and installed that connection can be readily made to the associated radio equipment through the shortest practical length of rf coaxial cable using appropriate transmission line connectors specified in Specification MIL-C-71, or MIL-C-3608. HN type connectors shall meet the requirements of this specification. (See 6.5)

3.2.2.8 Selective Isolating Devices.- If the proposed liaison antenna is to be used in combination with another antenna or antennas in a multiplexing system, the contractor shall provide the necessary isolation units and filters required for satisfactory operation of all the equipments involved. The contractor shall submit a specification covering the design and fabrication of each isolation unit necessary to provide satisfactory multiplexing of the equipments. The specification shall be subject to the approval of the procuring agency.

3.3 Required Measurements:

3.3.1 Radiation Pattern Measurements.- The contractor shall obtain the radiation patterns of the proposed antenna at full scale frequencies of 2, 4, 6, 8, 10, 12, 14, 16, 18, 20, 22, and 24 megacycles per second and the radiation patterns of the reference antenna (specified in 4.3.2 of this specification) at frequencies of 6, 8, 10, 12, 14, 16, 18, 20, 22, and 24 megacycles per second. The methods of measurement shall be as specified herein.

3.3.2 Impedance.

3.3.2.1 General. The impedance of the proposed antenna shall be measured over the full scale frequency range of 2 to 24 megacycles per second. The initial measurements shall be made on a scale model of the aircraft for the purpose of arriving at a satisfactory electrical design prior to installation of the antenna on a full scale aircraft. Full scale measurements shall be made on the prototype antenna installation for comparison with the model impedance data.

3.3.2.2 Model Measurements. The impedance of the proposed antenna shall be determined over the full scale frequency range of 2 to 24 megacycles per second by installing the antenna on a scale model of the aircraft for which it is being designed. The impedance of the antenna shall be measured at model frequencies corresponding to full scale frequency intervals of 1 megacycle over the frequency range of 2 to 24 megacycles per second. The measurements shall be made at more frequent intervals where it is necessary to establish the minimum or maximum values of resistance or reactance in the above frequency range. The methods of measurement and the test conditions shall be as specified herein.

3.3.2.3 Full Scale Aircraft Measurements. The impedance of the proposed antenna shall be measured over the frequency range from 2 to 24 megacycles per second in 1 megacycle intervals or less with the antenna installed on the full scale aircraft. Measurements shall be made with the aircraft in at least two different locations, for example, on reinforced concrete, non-reinforced concrete, or off the runway. The methods of measurements shall be as specified herein.

3.3.3 Antenna Efficiency. For "cap" type antennas the antenna efficiency (see paragraph 6.4.4) shall be determined over the frequency range from 2 to 6 megacycles per second from the dielectric loss of the plastic isolating section as specified herein. For frequencies above 6 megacycles per second it must be demonstrated that the antenna efficiency is essentially unity. If an antenna is propose other than a "cap" type the contractor shall submit to the Procuring Agency a proposal of the method to be used in determining antenna efficiency.

3.3.4 Matching Unit Efficiency. The power transfer efficiency of the antenna matching unit together with the transmission line from the transmitter shall be determined as specified herein.

3.3.5 Corona and Voltage Breakdown. Tests for protection against corona and voltage breakdown shall be made in accordance with 4.4.8 of this specification.

3.3.6 Operational Flight Tests. The antenna system shall be flight tested using at least ten frequencies spaced through the range of 2 to 24 megacycles per second. Satisfactory voice communication shall be demonstrated over the maximum range for the frequency involved. At least one test shall be made over a distance greater than 2000 miles. The flight test procedure shall be in accordance with 4.4.9 of this specification.

3.4 Engineering Reports.

3.4.1 Preliminary Report. A preliminary letter report shall be submitted describing the intent, method of approach, general outline, and target date.

3.4.2 Interim Report. A letter report shall be submitted, describing any change in method, antenna program, or target date as soon as such information is known.

3.4.3 Substantiating Data. Data from each of the measurements used to design and test the antenna shall be submitted to the contracting officer as soon as practicable after each test is completed. The method of measurement shall be described and the results shall be clearly presented. In particular, the following data shall be submitted at the times indicated:

3.4.3.1 Preliminary Design Data.

3.4.3.1.1 Principal plane radiation patterns and the corresponding radiation pattern efficiencies for both the proposed and the reference antennas at each frequency of pattern measurements shall be submitted when the pattern measurements are completed.

3.4.3.1.2 The impedance characteristics of the proposed antenna shall be submitted when the model measurements are completed.

3.4.3.1.3 As soon as the model impedance data has been obtained, a preliminary estimate of antenna efficiency shall be submitted.

3.4.3.1.4 A corrected curve of the antenna impedance based on the model impedance data and the estimated shunt capacitance and shunt conductance of the dielectric material to be used in the gap shall be submitted with the preliminary estimate of antenna efficiency.

3.4.3.1.5 A preliminary estimate of coupler efficiency shall be obtained from the corrected antenna impedance and shall be submitted with the preliminary estimate of antenna efficiency.

3.4.3.1.6 An estimate of the peak rf voltage which will appear across the antenna gap at the frequency for which this voltage will be the highest shall be submitted. This estimate shall be based on the corrected antenna impedance and on the estimated coupler efficiency assuming 150 watts of rf power available at the transmitter and 100 percent modulation. This estimate shall accompany the preliminary estimate of antenna efficiency.

3.4.3.1.7 A computation shall be made based on the preceding design data and estimates to show that the proposed antenna will meet the requirements for antenna system efficiency and power transfer efficiency of this specification. The computation shall take into account the power dissipated in the transmission line between the transmitter and the antenna coupler. This computation shall be submitted as soon as the model pattern and impedance measurements have been completed.

3.4.3.2 Final Design Data.- As soon as possible after the antenna and isolating gap have been designed the following data shall be submitted:

(1) Detail drawings of the proposed antenna and isolating gap.

(2) Final estimate of antenna efficiency based on full scale mockup of gap region (for cap-type antennas).

(3) Corrected impedance data based on model impedance and the added shunt capacitance and dielectric losses measured on the full scale mockup of the gap-region.

(4) Measured transfer efficiency of the transmission line and antenna coupler.

(5) An estimate of the peak rf voltage which will appear across the isolating antenna gap at the frequency for which this voltage will be highest. (This estimate shall be based on the measured transmission line and coupler efficiency and the corrected model impedance assuming 150 watts of rf power available at the transmitter and 100 per cent modulation.)

(6) Altitude chamber measurements of the rf breakdown voltage of the isolating gap at the highest altitude which the aircraft is designed to attain.

3.4.3.3 Data from Prototype Antenna Installed on Aircraft.- As soon as practicable after an aircraft with the prototype antenna is completed the following data shall be submitted:

(1) Full scale impedance measurements with the aircraft on the ground.

(2) Data from the flight test required by this specification.

3.4.3.3.1 Flight test reports must describe each test flight conducted by the contractor and comment on any operating defects encountered and modifications found necessary.

3.4.4 Final Engineering Report.- A final engineering report prepared in accordance with Specification MIL-T-9107, shall be submitted not later than 60 days after release of engineering design data. The final engineering report shall contain a compilation of all test data required by this specification, together with a description of the method employed in obtaining the data and complete data on the final design and fabrication processes for the antenna. (See 6.6)

4. SAMPLING, INSPECTION, AND TEST PROCEDURES

4.1 The antenna shall be subject to inspection by authorized Government inspectors. When inspection is conducted at the contractor's or manufacturer's plant, tests shall be conducted by the contractor or manufacturer under the supervision of the authorized Government inspector.

4.2 Previous acceptance or approval of material or the release of any design by the Procuring Agency shall in no case be construed as a guarantee of acceptance of the finished product.

4.3 Test Conditions.

4.3.1 Equipment Required.

Boonton, Type 160-A Q-Meter or equivalent
General Radio Type 916A RF Bridge or equivalent
General Radio Type 1601 RF Bridge or equivalent
General Radio Type 1602A Admittance Meter or equivalent
Bridge Detector, Battery Operated, 2 to 24 Mc
Bridge Detector, Battery Operated, 10 to 250 Mc
Bridge Oscillator, Battery Operated, 2 to 24 Mc
Bridge Oscillator, Battery Operated, 10 to 250 Mc
Pattern Range to cover the model frequencies
Scale Models 1/20th to 1/50th scale for pattern measurements,
1/5th to 1/10th scale for impedance measurements.
Radio Set AN/ARC-21

4.3.2 Reference Antenna. The reference antenna required in this specification shall consist of a fixed-wire extending from an insulator connected to the center tail fin, or in the case of double tail fin aircraft, from either the right or left tail fin whichever is the more convenient, to an insulator on the top center line of the fuselage. The wire shall be sixty-five feet in length or 80 percent of the fuselage length whichever is shorter. The antenna shall be suspended from the tip of the tail fin provided that the angle between the fuselage and antenna is less than 15 degrees. If this angle is larger the point of suspension shall be lowered so that the angle equals 15 degrees. The feed point shall be at the forward end of the antenna.

4.3.3 Model Impedance Measurements (Test Conditions).

4.3.3.1 The scale model for impedance measurements shall be large enough to contain all of the measuring equipment. It shall not be smaller than 1/10th scale nor larger than 1/5th scale and shall be covered with good conducting material.

4.3.3.2 All required measurements shall be made with the model in the clear, at least 30 feet away from surrounding objects and at least 25 feet off the ground. It shall be supported by a dielectric structure.

4.3.3.3 All the measuring equipment shall be installed inside the model and the primary supply voltage for this equipment shall be obtained from a source contained within the model. No external power leads or wires of any nature shall be connected to the model.

4.3.3.4 Final adjustment of the measuring equipment shall be made with the operator away from the model in a location where he has negligible effect on the antenna impedance. The mechanical means provided for remote adjustment of the equipment shall be constructed of dielectric material. To be sure that the operator is in a position where he has negligible effect, he shall move completely away from the model after the final adjustments have been made; this should produce no appreciable effect on the indicating instruments.

4.3.3.5 It is important that the circuit losses of the section of transmission line and any other network connecting the antenna to the measuring apparatus be small compared to the power absorbed (radiated and dissipated) by the antenna.

4.3.4 Flight Tests (Test Conditions).

4.3.4.1 Airborne Test Station. The airborne test station shall consist of a standard Radio Set AN/ARC-21 installation in the aircraft having the prototype antenna installation. The radio set shall be tuned and adjusted in accordance with the tests for performance in test installations as specified in 4.3.4.3.

4.3.4.2 Ground Test Station. The ground test station shall consist of a Radio Set AN/ARC-21 which has met the tests for performance in test installations, as specified in 4.3.4.3, connected through a minimum length of rf cable RG-8/U to a vertically polarized ground station antenna. All ground station equipment shall be connected and adjusted according to the best installation and operating practice. The ground station standard antenna shall be located on terrain that is reasonably flat and free from objects that would cause radio reflections. The site selected shall be subject to the approval of the Procuring Agency.

4.3.4.3 Radio Set AN/ARC-21 Performance in Test Installations. AN/ARC-21 equipment which satisfactorily meets the operating requirements of Specification MIL-R-6471 shall be considered satisfactory for test installations, except that the Government engineer or inspector assigned to the project shall have the authority to require such additional tests as he considers necessary to assure proper operation of the equipment.

4.3.4.4. Communications Performance. The equipment shall be ground tested after installation in the aircraft or ground stations. Radio Set AN/ARC-21 shall be properly installed and connected in accordance with the Handbook of Maintenance Instructions. In addition, and for the prototype test installation only, a suitable monitoring device shall be employed which will give an indication proportional to the rf power supplied to the antenna. This power meter is to be used to monitor the transmitter output to determine during flight tests that the equipment is operating satisfactorily. The monitoring method shall be subject to the approval of the Procuring Agency.

4.4 Methods of Measurement.

4.4.1 Radiation Pattern Measurements. Radiation patterns of a scale model of the airframe with the antenna installation shall be plotted on a model pattern range. The three principal plane patterns and a set of patterns in which ϕ is variable and θ has the values 0°, 25°, 37°, 45°, 53°, 60°, 66°, 72°, 84°, 90°, 96°, 102°, 108°, 114°, 120°, 127°, 135°, 143°, 155°, and 180° shall be obtained for both the θ and the ϕ polarizations. (For a definition of these angles see Fig. 1.) These patterns shall be plotted in polar coordinates with relative field strength plotted radially on a linear scale. Care must be taken that all the patterns at a given frequency are plotted to the same scale (i.e., radiated power and detector sensitivity constant for all patterns at a given frequency).

4.4.1.1 Radiation Pattern Efficiency. The radiation pattern efficiency for each frequency shall be calculated from the set of radiation patterns as follows:

(1) For each polarization obtain through the use of a planimeter the area enclosed by each of the measured linear polar pattern plots.

(2) For each of the specified values of θ add the two areas from (1), above, corresponding to the two polarizations.

(3) Plot the values obtained in (2) above, as a function of $\cos\theta$ ($-1 \leq \cos\theta \leq +1$) on a rectangular coordinate chart, and draw a smooth curve through the plotted points.

(4) Obtain with the aid of a planimeter the total area under the curve given by (3) above, between $\theta = 0°$ and $\theta = 180°$.

(5) Obtain with a planimeter the area under the curve given by (3) above and bounded by the straight lines which correspond to the two limiting values of θ, that is $\theta = 60°$ and $\theta = 120°$.

(6) Divide the area obtained in (5) by the area obtained in (4). This ratio is the "radiation pattern efficiency" for the frequency at which the pattern set was measured. It must necessarily lie in the range zero to one.

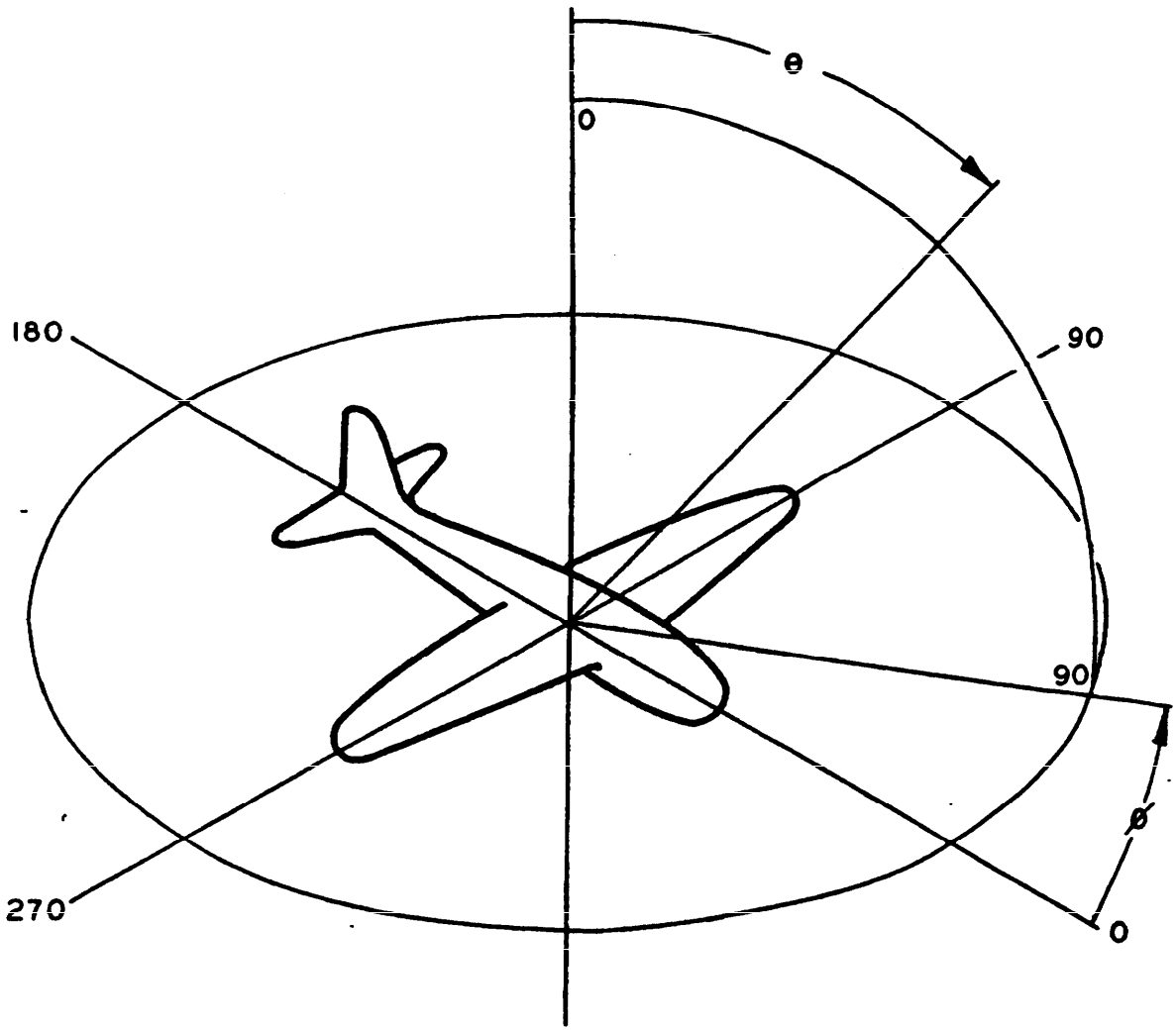

FIGURE 1 COORDINATE SYSTEM

4.4.2 Impedance Measurements (Model). The contractor shall have the privilege of using any one or any combination of methods to measure the impedance, provided that such methods are appropriate to the frequency range, and to the impedance values being encountered. If the authorized government inspector considers the data obtained from these measurements to be of questionable accuracy, the contractor shall repeat the measurements by any one or any combination of the methods which the inspector shall designate. The following is a list of recommended methods.

4.4.2.1 RF Bridge Substitution Method. With an rf bridge installed in the model and connected to the antenna terminals by a low loss section of coaxial transmission line, adjust the bridge to obtain a null. Without altering the bridge settings, remove the antenna from the end of the transmission line and replace it with an adjustable dummy load. Adjust the dummy load until a null is again obtained, then remove it from the transmission line and measure its impedance on an rf bridge.

4.4.2.2 RF Bridge Substitution Method (Partial Match). In using this method of impedance measurement, the procedure outlined in the preceding paragraph is modified as follows: A small low loss matching network is installed at the antenna feed point to provide a more favorable impedance, from the standpoint of rf bridge errors, at the bridge end of the coaxial cable. At each point of the measurement, the matching network is adjusted until a low VSWR is obtained at the rf bridge end of the cable, and the procedure outline in 4.4.2.1 is followed.

4.4.2.3 Direct Method. An rf bridge is installed at the antenna feed point or, if this is physically impossible, at a point within the model where connection to the antenna can be made with a short straight section of low loss air-dielectric coaxial line. The antenna impedance is either obtained directly, or in the case of the coaxial line, calculated from the impedance at the bridge terminals by conventional transmission line transformations. The length of coaxial line must be short in comparison to a wavelength at the frequency of measurement to avoid errors.

4.4.2.4 Susceptance Variation Method. When the linear dimensions of the air-frame are considerably less than a half wavelength, the resistance of a cap-type antenna is very low and the reactance is high. In this case there is no standard measuring instrument suitable for the impedance range, yet small enough to be mounted in the model. To obtain the impedance in such cases a parallel resonant circuit can be constructed and the antenna conductance measured by varying the capacitance (Fig. 2). Both the detector and signal source must be very loosely coupled. The circuit is first resonated without the antenna by adjusting C_0, and the width of the resonant curve between half power points is measured by varying the vernier condenser, C_1, which is in parallel with the main tuning condenser, C_0. The conductance of the unloaded circuit is $G_1 = \frac{\omega \Delta C_1}{2}$ where ΔC_1 is the change in capacitance between half power points.

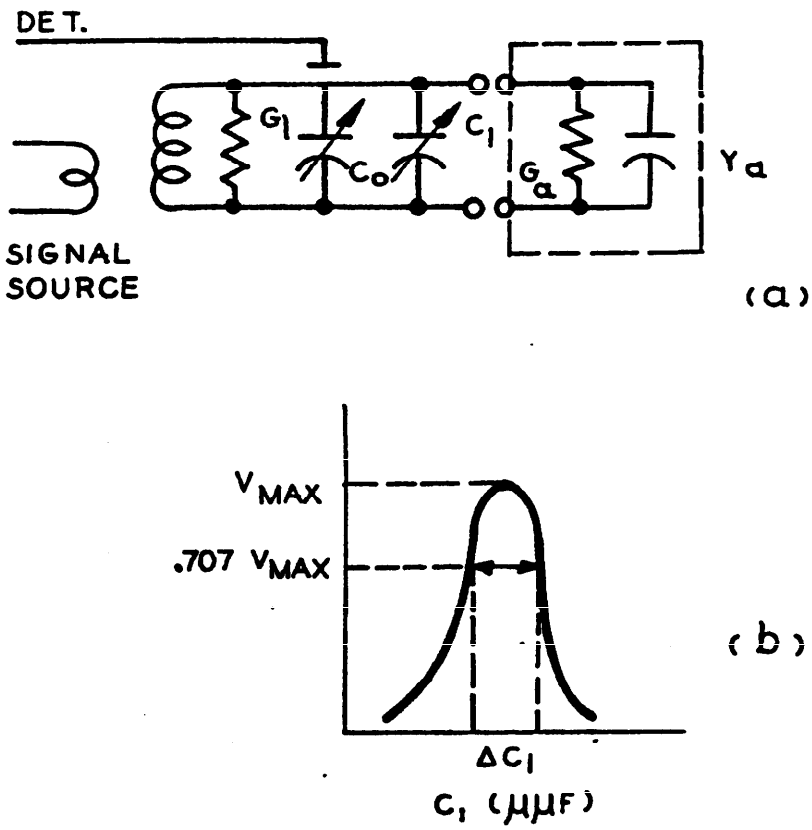

FIGURE 2

The antenna is then connected and the circuit resonated again by adjusting C_o with C_1 returned to its initial position. The change in C_o is the capacity of the antenna, and the width of the resonant curve is obtained in the same manner as before. The conductance of the loaded circuit is $\frac{WAC_1'}{2} = G_1 + G_a$. A limitation on this method results from the fact that the antenna conductance, G_a, in some cases is as small as 1 micromho, while the susceptance is of the order of 1000 micromho, so that even with coil Q's of 300 or 400, G_1 is large compared to G_a. To overcome this difficulty, a vacuum tube circuit which is equivalent to a negative conductance can be added to raise the Q of the circuit. Stable Q's of the order of 1000 to 2000 can be obtained in this manner.

4.4.2.5 Nominal Impedance Curve.- Plot a nominal antenna impedance curve based on the measured model impedance data. The following tolerance shall be placed on the nominal impedance values for the purpose of matching unit design.

a. Resistance ± (20% + 1 ohm)

b. Resistance ± 20%

4.4.3 Full Size Aircraft Impedance Measurements.- The General Radio Type 916A RF Bridge or equivalent together with the Bridge Oscillator and Bridge Detector shall be installed inside the aircraft fuselage at any convenient location for performing the measurements. Connection from the rf bridge to the antenna feed point shall be made through a length of RG-8/U coaxial cable. The aircraft shall be in the clear with no connecting wire attached. Primary power for operation of the bridge oscillator and detector shall be obtained from a source within the aircraft. Measurements can be made by one of the methods described in 4.4.2; other suitable methods may be used.

4.4.4 Antenna Efficiency:

4.4.4.1 General.- The methods for estimating antenna efficiency described below apply to cap-type antennas only. For other types of antenna these estimates must be made by appropriate methods, and the methods used are subject to approval by the Contracting Officer.

4.4.4.2 Preliminary Estimate.- Measure the capacity and Q of the configuration shown in Figure 3 with and without a slab of the dielectric material proposed for use as skin of the gap. This configuration shall consist of a rectangular sheet metal plate of height approximately equal to the proposed gap width, and about 1 1/2 gap widths wide. It shall be supported 1/2 gap width above a square ground sheet by means of two foam polystyrene supports. The sides of the ground sheet shall be at least 2 gap widths long. The slab of dielectric material shall rest on the ground sheet and shall be fastened to the metal plate in a convenient manner. The edges of the dielectric slab shall be sealed in the manner proposed for construction of the actual gap. Fiber orientation of the dielectric material shall be in the same direction as in the proposed version of the antenna.

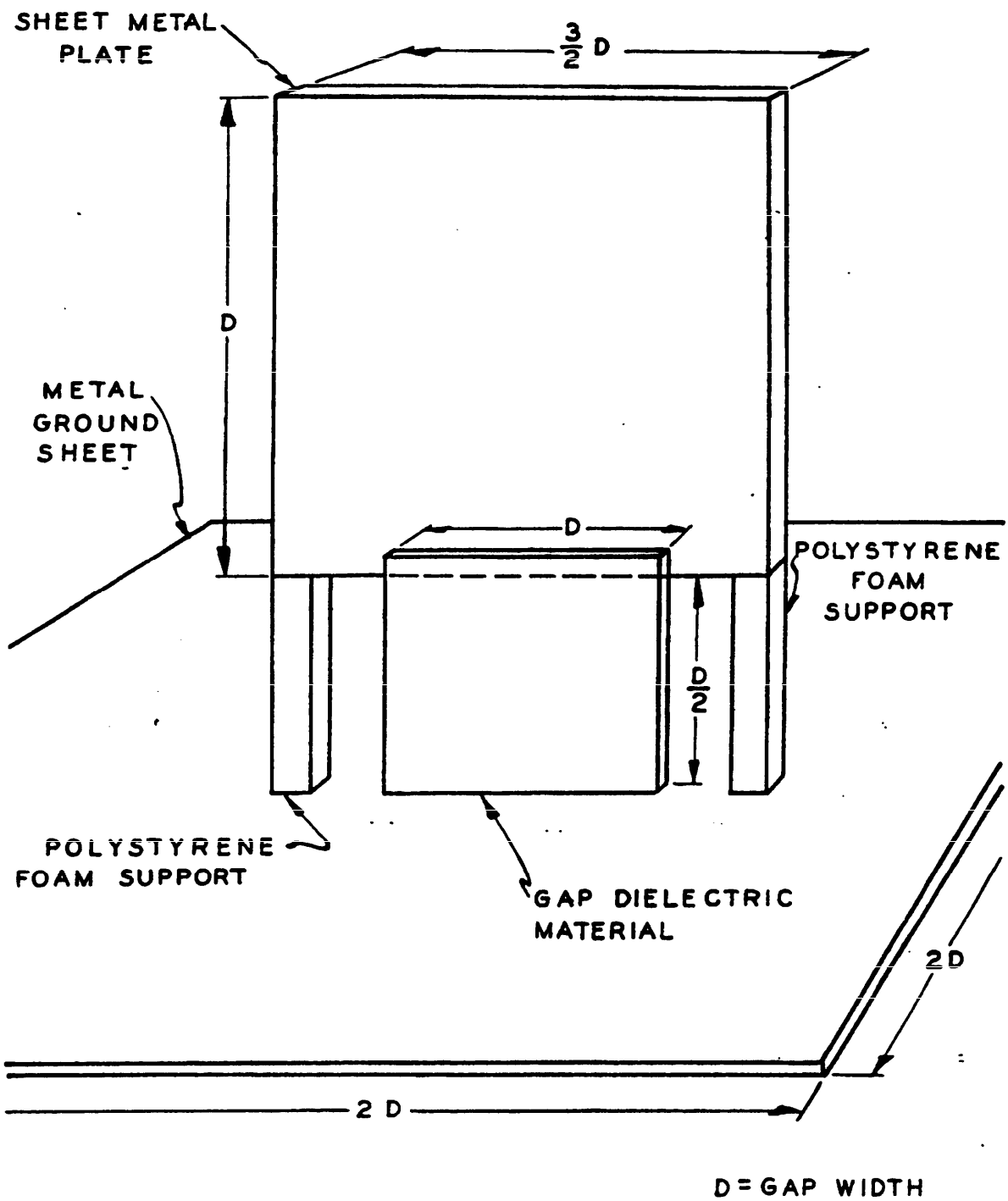

FIGURE 3 CONFIGURATION FOR PRELIMINARY ESTIMATE OF ANTENNA EFFICIENCY

4.4.4.2.1 Measurements shall be made using a Boonton type 160-A Q-meter or equivalent. Enough data shall be taken to establish the curve in the frequency range 2 to 6 megacycles per second, but at least one point shall be determined in every 0.5 megacycles. The Q-meter shall be placed off to the side of the gap near one of the supports. It shall be securely grounded to the ground sheet which, in turn, shall be grounded to a water pipe or other good ground connection. The leads to the meter shall be as short as practical.

4.4.4.2.2 A second set of measurements shall be made after immersing the dielectric slab in tap water for 72 hours. The slab shall then be removed from the water and wiped dry and allowed to dry further for five minutes at room temperature, before repeating the measurement described above. Measurements shall start at the lowest frequency and be taken for increasing frequencies. All measurements shall be completed within one hour after removing slab from water.

4.4.4.2.3 From these measurements the added shunt admittance due to the dielectric skin material in the gap shall be estimated as follows:

Let C_o = Capacity in microfarads required to resonate Q-meter coil without external connection.

Q_1 = Q as read off instrument with plate attached but without dielectric slab.

Q_2 = Q as read off instrument with plate attached and with dielectric material.

ΔC = Change in capacitance in microfarads, read off vernier dial with plate attached, with and without dielectric slab.

f = Frequency in Mc/sec.

L = Peripheral distance around gap in feet.

D = Gap width in feet (distance from isolated metallic section to main part of airframe).

4.4.4.2.4 Then the added shunt admittance across the gap due to the dielectric skin is then given by $Y_d = G_d + jB_d$, where

$$G_d = 2\pi f\, C_o \left(\frac{1}{Q_2} - \frac{1}{Q_1}\right) \frac{L}{2D} \qquad B_d = 2\pi f\, \Delta C \frac{L}{2D} \text{ mhos}$$

4.4.4.2.5 The effect of dielectric spar sections upon gap admittance shall be determined by measuring the dielectric constant and loss tangent of a sample of the spar material using conventional techniques. Measurements shall be taken before and after soaking as specified for the skin material. During the measurements the sample shall be oriented so that the glass fibers are lengthwise in the field. The admittance of the spar sections shall be calculated from the dielectric constant and loss tangent assuming uniform electric fields in the gap. This admittance shall be added to the skin admittance to determine the total effect of the dielectric isolating section.

4.4.4.2.6 These results shall be used for correcting the model antenna impedance as required in 3.4.3.1.4 of this specification, as well as for estimating the antenna efficiency. For correcting the model impedance at frequencies above 6 megacycles it may be assumed that $Y_d = jB_d = j2\pi f \Delta C \frac{L}{2D}$ where ΔC is that measured at 6 megacycles per second. To show that this is a reasonable assumption, the dielectric constant and loss factor of the dielectric material shall be measured in any convenient manner over the frequency range from 2 to 24 megacycles per second.

4.4.4.3 Final Estimate. For these measurements a full size mockup of the gap and surrounding aircraft structure shall be built. The same mockup as required in 4.4.8 may be used.

4.4.4.3.1 The capacity and Q across the antenna gap shall be measured with the isolated cap supported by polystryrene foam at the proper distance. Measurements shall be made using a Boonton type 160-A Q-meter or equivalent. Enough data shall be taken to establish the curve in the frequency range from 2 to 6 megacycles per second but at least one point shall be determined in every 0.5 megacycles.

4.4.4.3.2 The above measurements shall be repeated with the complete gap structure proposed for the final version of the antenna, including fiberglas laminate panels and supports, lightning protective devices, isolation units, connectors and any other equipment which will be placed in the gap.

4.4.4.3.3 These data shall be used to compute antenna efficiencies and to correct the impedance measurements of section 4.4.2 as required in 3.4.3.2 of this specification.

4.4.5 Matching Unit Measurements.

4.4.5.1 Estimate of Power Transfer Efficiency of Matching Unit. The efficiency of the impedance matching unit shall be estimated by use of the charts, Figs. 4 and 5. The procedure for using these charts is as follows:

(1) The antenna impedance shall be normalized to the characteristic impedance of the transmission line from the transmitter to the matching unit.

(2) For frequencies between 2 Mc and 15 Mc use the chart of Fig. 5. Find the point corresponding to the normalized antenna impedance on the chart. The matching circuit efficiency shall be obtained by interpolation between contours of constant

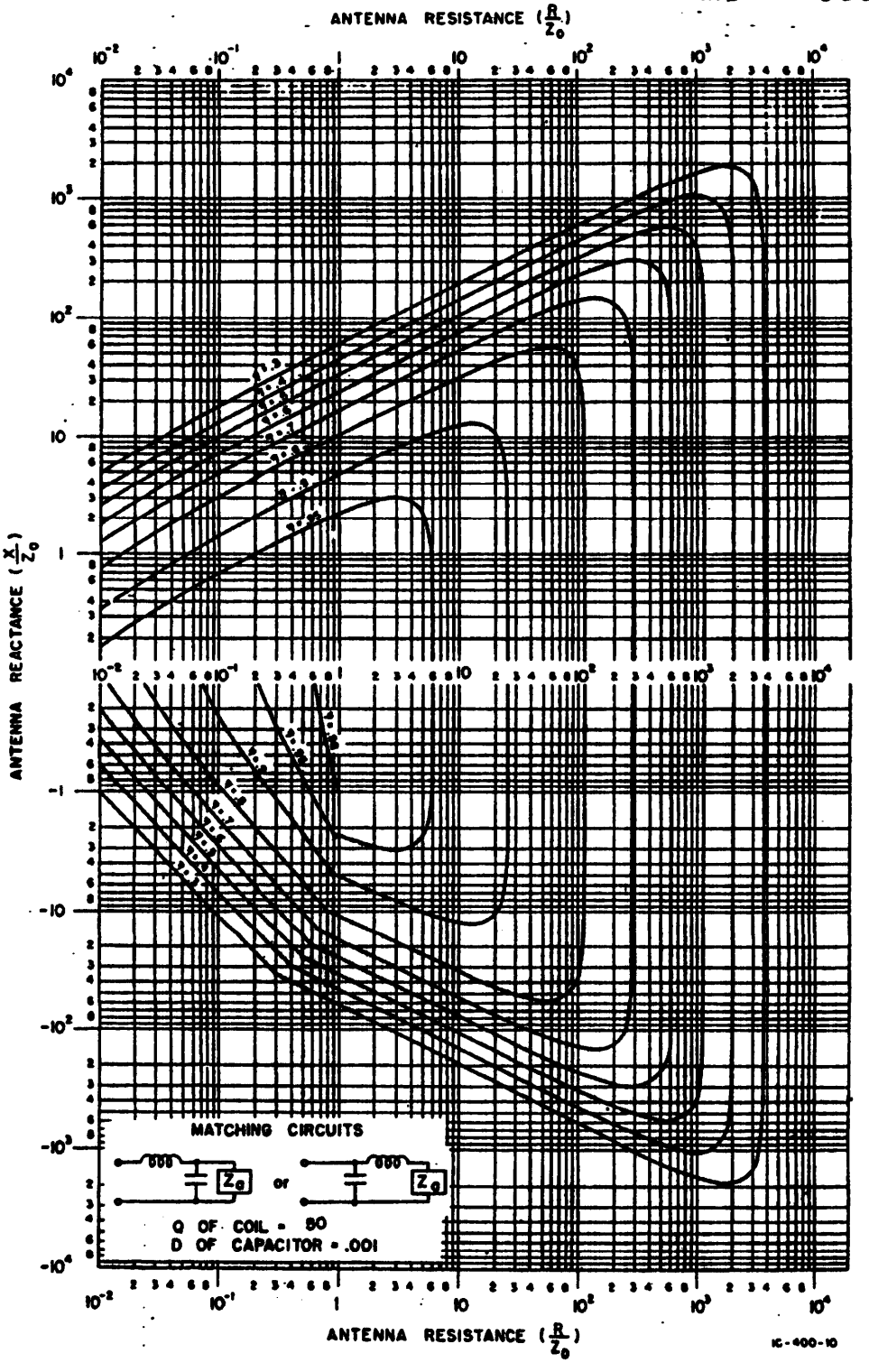

FIGURE 4 MATCHING CIRCUIT EFFICIENCY FOR F = 15-24 MC/S

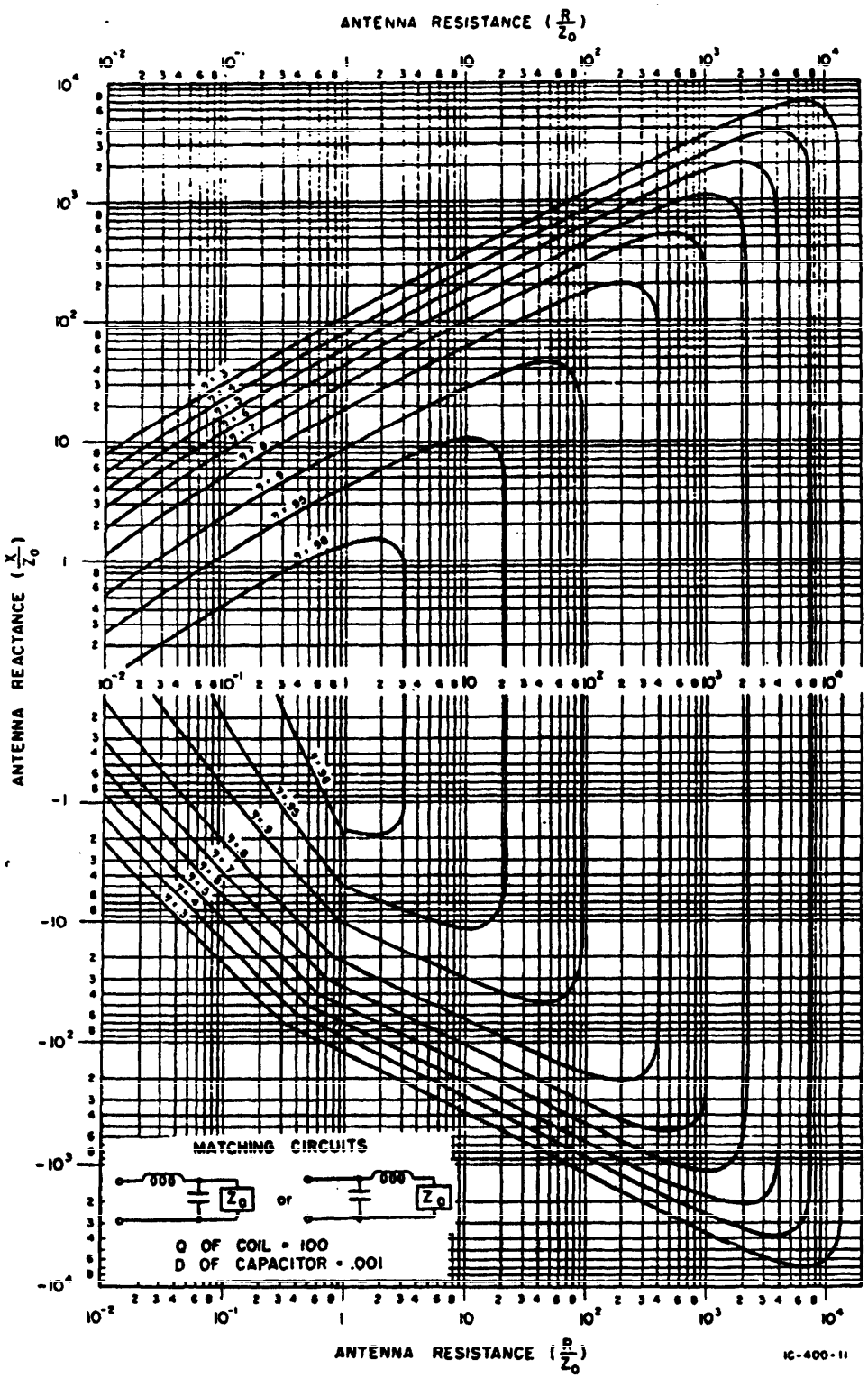

FIGURE 5 MATCHING CIRCUIT EFFICIENCY FOR F = 2 - 15 MC/S

efficiency (η = constant).

(3) At frequencies above 15 Mc proceed in the same fashion using the chart of Fig. 4.

4.4.5.2 Measurement of Power Transfer Efficiency of Matching Unit and Transmission Line. The power transfer efficiency of the transmission line and antenna matching unit shall be measured together; this efficiency is the product $\eta_t \eta_c$. It is the ratio of the power input at the antenna terminals to the power input at the coaxial line between the transmitter and antenna.

4.4.5.2.1 The contractor shall have the privilege of using any one or any combination of methods to measure the efficiency of the matching unit and transmission line, provided such methods are appropriate to the frequency range and to the impedance values of the antenna. If the authorized Government inspector considers the data obtained from these measurements to be of questionable accuracy, the contractor shall repeat the measurements by any one or any combination of methods which the inspector shall designate. The following is a list of recommended methods:

4.4.5.2.2 Three Impedance Method. In this method the matching unit shall be terminated in a dummy load whose impedance shall be that of the antenna at the frequency of measurement. The dummy load shall be constructed so that most of the power is dissipated in a single resistor, R_0. An rf power source shall be applied to the transmission line and the matching unit allowed to complete its normal tune-up cycle. The input shall be then disconnected from the rf source and connected to an impedance bridge. Three impedances shall be measured: For the first of these, Z_1, the dummy load shall be in the normal condition. The second impedance shall be measured with the resistance component of the dummy load shorted out; designate this Z_2. The third impedance, Z_3, shall be measured with the resistance component opened. The diagrams of Figs. 6A, 6B and 6C illustrate these measurements. The ratio of the power dissipated in R_0 to the power input to the transmission line is

$$\eta_c \eta_t \eta_e = \frac{\left|(Z_1 - Z_3)(Z_1 - Z_2)\right|}{R_1 \left| Z_2 - Z_3 \right|}$$

where η_e is the transfer efficiency of the reactive part of the dummy load, and R_1 is the resistive part of Z_1. If the dummy load is carefully constructed η_e can be made approximately equal to unity, and the formula above yields the product $\eta_c \eta_t$ directly. In any case η_e can be measured by the method outlined above. To determine η_e the dummy load is connected directly to the bridge. Hence

$$\eta_e = \frac{\left|(Z_1' - Z_3')(Z_1' - Z_2')\right|}{R_1 \left|(Z_2' - Z_3')\right|}$$

where the primes indicate measurements made with the dummy load alone.

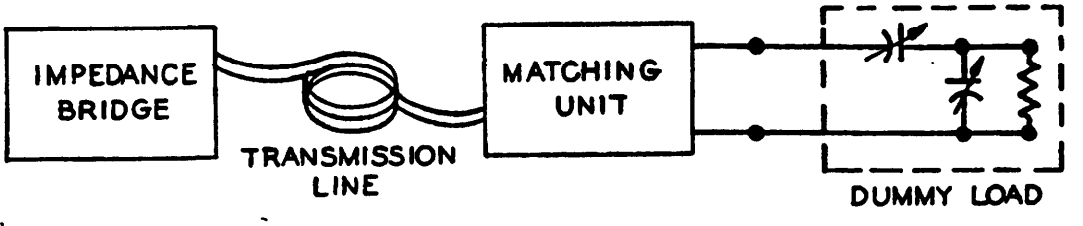

MEASUREMENT OF Z_1

(A)

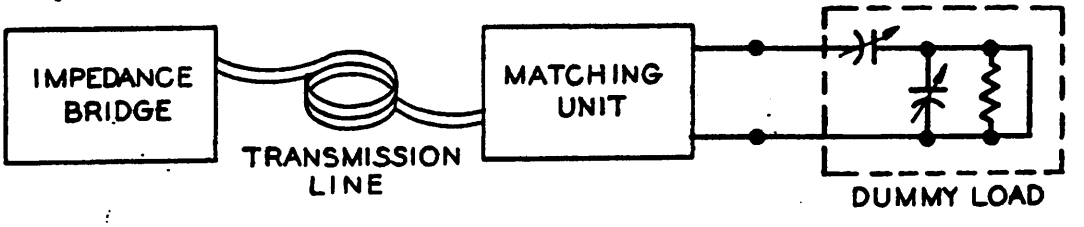

MEASUREMENT OF Z_2

(B)

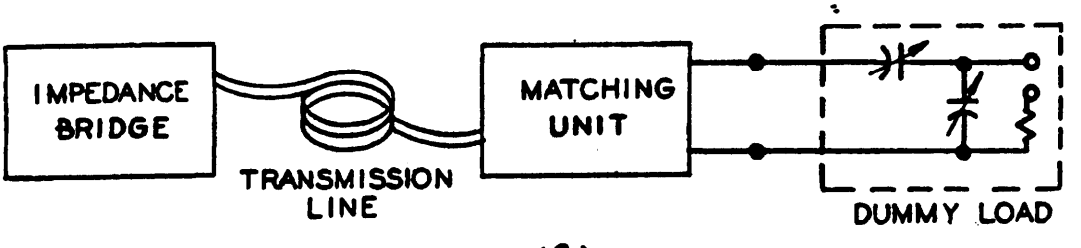

(C)

MEASUREMENT OF Z_3

FIGURE 6

4.4.5.2.2.1 For cap-type antennas a dummy load built according to the schematic diagram of Fig. 6A is suitable. With care in construction the losses in the reactive elements can be made negligible. The resistor, R_o, shall have sufficient power dissipating capacity to absorb the power applied to the load during tune-up. It is not necessary to know its impedance, but for accurate measurements its reactance shall not be more than 20 percent of its resistance. Globar high frequency resistors have proved satisfactory. Construction of the reactive part of the dummy load can be simplified if a range of resistance values is employed.

4.4.5.2.3 Current and Resistance Measurement. The most straight-forward scheme requires the measurement of current and resistance at the transmission line input and at the dummy load. The input and output powers are obtained directly. The efficiency $\eta_c \eta_t$ shall be the ratio of power out to power in. In the current-resistance method the coupler shall be terminated in a dummy load of the proper impedance in series with an rf ammeter. A source of rf power shall be connected to the input of the transmission line through an rf ammeter and the matching unit shall be allowed to complete its normal tune-up cycle. When a match is obtained the input and load currents shall be recorded. The transmission line shall be disconnected from the power source and the impedance shall be measured looking into the line. The output and input power shall be computed ($I^2 R$). When using this method several precautions must be observed. To obtain the resistance values correctly care must be taken to keep the circuit strays constant during measurement. It should be further noted that the current measurements are subject to considerabl error and that a 1% error in current measurement produces a 2% error in computed power. On the input side of the network care must be taken to minimize strays to ground between the current meter and the point at which the matching network input impedance is measured. On the output side of the network it is necessary to make the meter part of the load impedance so that the series impedance of the meter and the strays to ground are accounted for. This is particularly true when measuring wing-cap or tail-cap impedances at 2 megacycles where the antenna resistance may be very low. The meter resistance may then become an appreciable part of the total load resistance. Thus, any change in meter impedance between the bridge measurement and the current measurement may become a source of error. Of more concern than the above considerations, however, is the fact that a number of different meter ranges must ordinarily be used to measure the load current over the 2 to 24 megacycle band because of the variation in antenna resistance. Accurate meter calibration is therefore a necessity.

4.4.6 Antenna System Efficiency. The antenna system efficiency of the proposed antenna shall be computed at each of the frequencies required in 3.2.2.2 of this specification by the following formula: $\eta_s = \eta_p \eta_a \eta_c \eta_t$ where

η_s = ANTENNA SYSTEM EFFICIENCY

η_p = ANTENNA PATTERN EFFICIENCY

η_a = ANTENNA EFFICIENCY

η_c = ANTENNA COUPLER EFFICIENCY

η_t = TRANSMISSION LINE EFFICIENCY

η_p shall be computed from the model pattern measurements in accordance with 4.4.1.1 of this specification. η_a normally can be assumed to be unity in the frequency range of 6 to 24 megacycles per second, however, the contractor shall demonstrate that this is essentially true. The products of $\eta_c \eta_t$ is the measured value of efficiency for the combined transmission line and antenna coupler m ured in accordance with 4.4.5.2 of this specification.

4.4.6.1 For the reference antenna it shall be assumed that $\eta_s = 0.9\,\eta_p$. The antenna system efficiency shall meet the requirements of 3.2.2.2 of this specification.

4.4.7 Power Transfer Efficiency. The power transfer efficiency of the proposed antenna shall be computed and a curve of efficiency vs frequency shall be plotted over the frequency range 2 to 6 megacycles per second. Enough points shall be computed to establish the curve but at least one point shall be computed every 0.5 Mc.

4.4.7.1 The following formula shall be used to compute the power transfer efficiency of the proposed antenna: Power transfer efficiency = $\eta_a \eta_c \eta_t$ where η_a is the antenna efficiency estimated in accordance with 4.4.4, η_c is the power transfer efficiency of the matching unit, and η_t is the power transfer efficiency of the transmission line. η_c and η_t shall be determined in accordance with 4.4.5.2 of this specification.

4.4.7.2 The calculated power transfer efficiency shall meet the requirements specified herein.

4.4.8 Corona and Voltage Breakdown. The antenna installation including lightning arrester, lead in, and isolation units if used, shall be tested for protection against corona and voltage breakdown. The tests shall be performed at simulated maximum altitude in an altitude chamber, using full scale mockups of the vulnerable regions of the antenna installation. Vulnerable points which shall be tested are the regions where application of the principals of electrostatic field theory indicates the probable presence of high voltage gradients. For isolated

tip antennas such vulnerable points include spar splice regions, hinge joints, angular breaks in the isolating gap, leading and trailing edge, etc. Tests can be made using a mockup of the entire gap region or, alternatively, they can be made using sectional mockups of the regions of interest provided that the section tested includes enough of the structure on either side of the point of interest to insure the similarity of electric fields at the point under test.

4.4.8.1 The rf voltage for breakdown or corona onset shall be established as follows: At the simulated altitude (maximum and operational), the rf voltage applied to the mockup shall be increased until corona or voltage breakdown occurs. The ambient air temperature of the pressure chamber during the test shall be recorded. The rf voltage which causes the onset of corona or voltage breakdown shall be corrected to minus 40 degrees C ambient air temperature. The frequency used for this test shall be that at which maximum voltage is developed at the terminals of the proposed antenna. The measurements shall meet the requirements specified herein.

4.4.9 Flight Test Procedure. Under the conditions specified in 4.3.4 of this specification the contractor shall demonstrate satisfactory air-to-ground and ground-to-air voice communication at various altitudes up to the service ceiling of the aircraft and distances from the ground station up to 2000 miles. Test frequencies to be used for a given distance and time of day shall be in accordance with the predictions of the Central Radio Propagation Laboratory, National Bureau of Standards. At least ten frequencies spaced over the frequency range of 2 to 24 megacycles per second shall be used. Frequency authorization can be obtained from the Procuring Agency. At least one test shall be made with the aircraft at a distance greater than 2000 miles from the ground station. Information on ground station facilities for the long range test can be obtained from the Procuring Agency. For each test frequency used the contractor shall demonstrate that satisfactory voice communication can be established at any aircraft heading.

4.4.9.1 Radio Noise. Qualitative noise reception shall be recorded during t tuning operation cycle of the matching unit.

4.4.9.2 Precipitation Static. Qualitative receiving checks during the course of the operational flights tests shall be recorded.

5. PREPARATION FOR DELIVERY

5.1 Not applicable.

6. NOTES

6.1 Use. The antennas covered by this specification are intended to be installed on aircraft and used with high frequency communication equipment.

6.2 The following publication may be of interest in connection with tests specified herein:

Handbook for Maintenance Instructions for Radio Set AN/ARC-21.

6.3 A satisfactory antenna impedance matching unit for use with wing-cap and tail-cap liaison antennas has been developed by Engineering Research Associates, Inc., St. Paul, Minnesota.

6.4 Definitions:

6.4.1 Antenna System Efficiency.- Antenna system efficiency is defined as the ratio of the power radiated into the solid angle included between 30 degrees above the horizontal plane through the aircraft to 30 degrees below this plane to the total power input at the transmission line terminals.

6.4.2 Power Transfer Efficiency.- Power transfer efficiency is defined as the ratio of total radiated power to the power input to the transmission line at the transmitter terminals.

6.4.3 Matching Unit Efficiency.- Matching unit efficiency is defined as the ratio of the power delivered to the antenna to the power input to the matching unit.

6.4.4 Antenna Efficiency.- The antenna efficiency is defined as the ratio of the radiated power to the power input at the antenna terminals.

6.5 Specification MIL-C-3643 may be used as a guide in the determination of the particular type of HN connector required in 3.2.2.7. When the particular type of connector has been established, the contractor shall satisfy the procuring agency. The procuring agency will furnish the applicable drawing, if available, for the type of connector used.

6.6 Ordering Data.- Invitations for bids, contracts and purchase orders should state the conditions for the following:

6.6.1 The contractor shall reproduce the final engineering report required by 3.4.4 and accomplish distribution in accordance with a list to be furnished by the procuring agency.

SPECIFICATION ANALYSIS SHEET

Form Approved
Budget Bureau No. 119-R004

INSTRUCTIONS

This sheet is to be filled out by personnel either Government or contractor, involved in the use of the specification in procurement of products for ultimate use by the Department of Defense. This sheet is provided for obtaining information on the use of this specification which will insure that suitable products can be procured with a minimum amount of delay and at the least cost. Comments and the return of this form will be appreciated. Fold on lines on reverse side, staple in corner, and send to preparing activity *(as indicated on reverse hereof)*.

SPECIFICATION

ORGANIZATION *(Of submitter)* | CITY AND STATE

CONTRACT NO. | QUANTITY OF ITEMS PROCURED | DOLLAR AMOUNT $

MATERIAL PROCURED UNDER A

☐ DIRECT GOVERNMENT CONTRACT ☐ SUBCONTRACT

1. HAS ANY PART OF THE SPECIFICATION CREATED PROBLEMS OR REQUIRED INTERPRETATION IN PROCUREMENT USE?

A. GIVE PARAGRAPH NUMBER AND WORDING.

B. RECOMMENDATIONS FOR CORRECTING THE DEFICIENCIES.

2. COMMENTS ON ANY SPECIFICATION REQUIREMENT CONSIDERED TOO RIGID

3. IS THE SPECIFICATION RESTRICTIVE?

☐ YES ☐ NO IF "YES", IN WHAT WAY?

4. REMARKS *(Attach any pertinent data which may be of use in improving this specification. If there are additional papers, attach to form and place both in an envelope addressed to preparing activity)*

SUBMITTED BY *(Printed or typed name and activity)* | DATE

DD FORM 1 APR 63 1426 REPLACES NAVSHIPS FORM 4863, WHICH IS OBSOLETE PLATE NO. 15419

FOLD

DEPARTMENT OF THE NAVY

POSTAGE AND FEES PAID
NAVY DEPARTMENT

OFFICIAL BUSINESS

COMMANDER
SYSTEMS ENGINEERING GROUP
ATTN: SEPS
WRIGHT-PATTERSON AFB, OHIO 45433

FOLD

PLATE NO. 15419 (BACK)