INCH-POUND

MIL-A-8863C(AS)
19 July 1993
SUPERSEDING
MIL-A-8863B(AS)
6 May 1987

MILITARY SPECIFICATION

AIRPLANE STRENGTH AND RIGIDITY GROUND LOADS FOR NAVY ACQUIRED AIRPLANES

This specification is approved for use within the Naval Air Systems Command, Department of the Navy, and is available for use by all Departments and Agencies of the Department of Defense.

1. SCOPE

1.1 Scope. This specification defines the strength and rigidity requirements applicable to land-based and ship-based airplanes for the following ground loading conditions:

a. Take-offs.

b. Landings

c. Ground maneuvering.

d. Ground handling.

e. Supplemental loads.

Beneficial comments (recommendations, additions, deletions) and any pertinent data which may be of use in improving this document should be addressed to: Commanding Officer, Naval Air Warfare Center Aircraft Divison Lakehurst, Systems Requirements Department, Code SR3, Lakehurst, NJ 08733-5100, by using the self-addressed Standardization Document Improvement Proposal (DD Form 1426) appearing at the end of this document or by letter.

AMSC N/A FSC 1510

2. APPLICABLE DOCUMENTS

2.1 Government documents.

2.1.1 Specifications and Standards. The following specifications and standards form a part of this specification to the extent specified herein. Unless otherwise specified, the issues of these documents shall be those listed in the issue of the Department of Defense Index of Specifications and Standards (DODISS), and supplement thereto, cited in the solicitation.

SPECIFICATIONS

MILITARY

MIL-D-8708	Demonstration: Aircraft Weapon Systems, General Specification for
MIL-A-8860	Airplane Strength and Rigidity, General Specification for
MIL-A-8867	Airplane Strength and Rigidity Ground Tests
MIL-A-18717	Arresting Hook Installations, Aircraft
MIL-L-22589	Launching System, Nose Gear Type, Aircraft
MIL-T-81259	Tie-Downs, Airframe Design, Requirements for

STANDARDS

MIL-STD-2066	Catapulting and Arresting Gear Forcing Functions for Aircraft Structural Design

(Unless otherwise indicated, copies of federal and military specifications standards, and handbooks are available from DODSSP - Customer Service, Standardization Document Order Desk, Building 4D, 700 Robbins Avenue, Philadelphia, PA 19111-5094.)

2.2. Order of precedence. In the event of a conflict between the text of this specification and the references cited herein (except for associated detail specifications, specification sheets or MS standards), the text of this specification shall take precedence. Nothing in this specification, however, shall supersede applicable laws and regulations unless a specific exemption has been obtained.

3. REQUIREMENTS

3.1 Weights. The design weights shall be as specified in MIL-A-8860.

3.2 Weight distribution and center of gravity positions. Weight distribution and center of gravity (CG) positions shall be all those that are critical as defined by all possible arrangements of variable and removable items for which provisions are required including all combinations of partially and fully loaded multiple bomb racks, internal fuel tanks, and external fuel tanks. In addition these arrangements shall include:

a. The maximum internal fuel loading that can be attained within the applicable design weight with all store stations empty of pylons, adapters, launchers, racks, and stores, and with other useful loadings such as passengers, cargo, guns and ammunition, etc, removed.

b. All asymmetrical store loading configurations which result in the lesser of the following rolling moments:

(1) 1.2 times the maximum rolling moment attainable by loading each store station, in turn, with all possible combinations of pylons, adapters, launchers, racks, and stores specified to be carried by that store station in the detail specification. As each store station is loaded all other store stations shall be empty of adapters, launchers, racks, stores, etc.

(2) Maximum attainable by loading only one side of the airplane with the other side empty of adapters, launchers, racks, stores, etc.

c. A tolerance of ±15 percent of the mean aerodynamic chord (MAC) or 15 percent of the distance between the most forward and the most aft actual values from the complete CG envelope, whichever is greater. This tolerance shall be applied so as to move the design CG forward of the most forward position and aft of the most aft position. For airplanes with variable sweep wings, the reference MAC shall be for the wings in the landing and take-off position.

3.3 Limit and ultimate loads. With the exception of barricade loads, all loads specified herein are limit. The barricade loads are ultimate.

3.4 Balance of forces. For conditions for which parameters or values of parameters are not completely specified to the extent necessary for the airplane and its components to be in complete translational and rotational equilibrium, additional forces which are determined by a rational method shall be assumed to act in a manner such that the acceleration of the airplane's component masses are balanced by the externally applied forces. For the loading conditions specified in 3.10 (except 3.10.1.6), 3.11.3 (except 3.11.3.5, 3.11.3.9 and 3.11.3.10), 3.14.1, 3.14.2, 3.14.5, and 3.14.6, the externally applied forces and airframe responses shall be determined by dynamic/flexible airframe analyses.

3.5 Engine thrust. Unless specified otherwise herein, the values of engine thrust and/or power shall vary from zero to the maximum available.

3.6 Types of airplanes. The types of airplanes are designated as follows:

CB - Carrier-based airplanes including carrier-based trainer airplanes

LB - Land-based airplanes other than land-based trainer airplanes

LBT - Land-based trainer airplanes

STOL - Airplanes having short field take-off and landing requirements

VTOL - Airplanes having vertical take-off and landing requirements

SKI - CB, LB, LBT and STOL airplanes equipped with skis

3.7 Arresting and catapulting forces. For carrier-based airplanes, the horizontal components of the arresting hook and catapult tow forces shall be derived from MIL-STD-2066 or additional data provided in the detail specification for all the arresting gears and catapults with which the airplane is required to operate.

3.8 Variation in servicing of landing gear and tail bumper. For all take-off and landing conditions the shock-strut air or gas pressure, shock-strut oil level, and tire pressure shall be all combinations of the following variations:

a. 15 percent above and 15 percent below the recommended air or gas pressure with the shock strut in the fully extended position.

b. 15 percent above and 15 percent below the recommended oil volume. If the 15 percent above variation cannot be attained, the maximum attainable variation shall be used.

c. 20 percent above and 20 percent below the recommended tire pressure.

These combinations shall include servicing instructions and ambient temperatures (cold day to tropical day) effects.

3.9 Field roughness requirements. For field take-offs from, and landings on (a) unprepared sod, clay, or dirt fields, (b) semiprepared matted sod, clay, or dirt fields, and (c) paved runways, the roughness or range of terrain contours and soil-bearing strength for design shall be as defined on Figure 1. The soil-bearing strength is given in terms of the California Bearing Ratio (CBR) and shall be constant up to a depth of at least one foot. For both the take-off and landing roll-out requirements the ground roughness contours for design shall be one minus cosine shaped undulations of constant wavelength. Such undulations shall have all combinations of heights and lengths specified on Figure 1. The shape of the undulations in the lateral direction shall be held constant. The roughness for each type of airplane shall be as follows:

a. Paved runways - CB, LB, LBT, and STOL.

b. Semiprepared fields - CB and STOL.

c. Unprepared fields - STOL.

d. For SKI airplanes snow and ice covered semiprepared fields shall apply.

3.10 Take-off.

3.10.1 Catapult take-off. Applicable to carrier based airplanes. The design loads for airplane accessories for catapult launching shall be in accordance with this section.

3.10.1.1 Maximum deck reactions. The airplane design shall be such that the maximum landing gear vertical load for each landing gear unit separately, which results from the conditions of 3.10.1, shall not exceed the allowable deck reactions determined from Figures 2 and 3.

3.10.1.2 Holdback loads. The holdback loads shall be as specified herein.

3.10.1.2.1 Buffing. The holdback bar shall engage the slider of the catapult deck hardware at all critical angles resulting from the spotting requirements of MIL-L-22589. During the buffer stroke, a tension load equal to the load H in 3.10.1.2.3 shall be applied to the airplane holdback fitting.

3.10.1.2.2 Tensioning. The airplane shall be secured to the catapult shuttle by the launch bar, and to the deck through the deck ramp structure by the holdback bar, in all critical attitudes which occur during the tensioning operation. The horizontal component of the tensioning force applied by the catapult shuttle shall be 5,500 pounds and shall be reacted by the holdback assembly.

3.10.1.2.3 Release. The airplane shall be in all attitudes resulting from the release operation. The deflection of tires and shock struts shall correspond to the forces acting. The tension load H, in pounds, at the airplane holdback fitting shall be:

$$H = 1.65 \left[\frac{T + 5500 + 0.2W}{\cos \theta}\right] + 0.06R$$

where:

a. T = maximum thrust, with thrust-augmentation devices operating, if airplane is so equipped, including surge effects from ignition, at sea level on a cold day, LB.

b. W = maximum design weight, LB.

c. θ = angle between holdback axis and deck at release.

d. The load in the launch bar shall be that required for equilibrium. The side loads shall be those resulting from the maximum possible misalignment of the launch system resulting from the off-center positions of MIL-L-22589.

e. R = minimum release element load, LB.

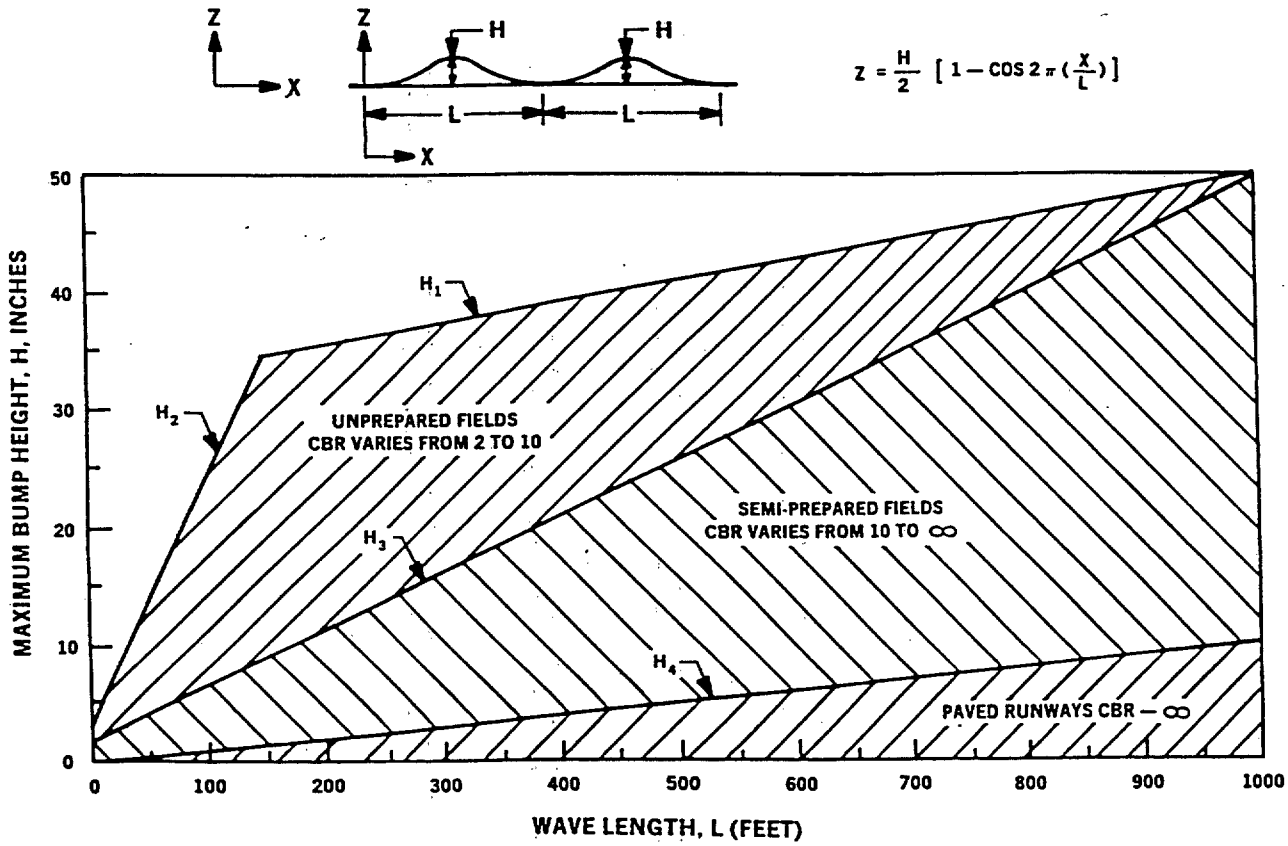

$H_1 = .01765\,L + 32.35$ $(150 \leq L \leq 1000)$

$H_2 = .2067\,L + 4$ $(0 \leq L \leq 150)$

$H_3 = .0480\,L + 2$ $(0 \leq L \leq 1000)$

$H_4 = .01\,L$ $(0 \leq L \leq 1000)$

FIGURE 1. Ground roughness for landing and take-off.

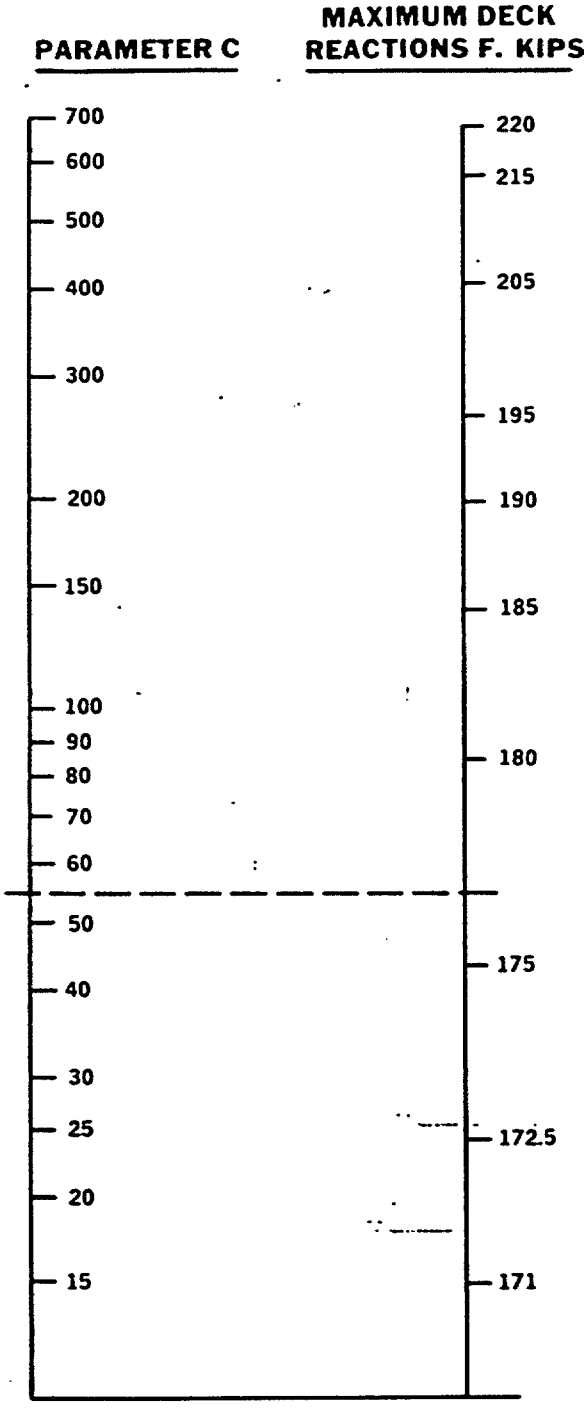

Definitions

P = Rated load of tire, LBS

p = Operational pressure of tire, PSI

r = Rated pressure of tire, PSI

$C = K \frac{P}{p}$

$K = (0.7 \frac{p}{r} + 0.3)^{1/2}$

F = Maximum deck reaction from nomogram

Example-Single Wheel — Find the maximum permissible landing gear deck reaction F for an airplane having a single wheel landing gear with a 30 x 7.7 tire for which:

P = 21,300 LBS

p = 400 PSI

r = 360 PSI

$K = (0.7 \times \frac{400}{360} + 0.3)^{1/2} = 1.04$

$C = 1.04 \times \frac{21,300}{400} = 55$

Max. Permissible Reaction (KIPS)

F = 176.5

Example-Dual Wheels — For dual wheels with the same size tires spaced 14 inches on centers (b') divide the reaction F obtained from this nomogram by the dual wheel load factor K_e from Figure 3:

b' = 14" (Spacing of dual wheels)

$K_e = .925$

$F' = \frac{176,500}{.925} = 191,000$ LBS

FIGURE 2. Maximum allowable vertical deck reaction for a single landing - Catapult area.

$$\text{Max Dual Wheel Reaction} = \frac{\text{Max Single Wheel Reaction}}{K_e}$$

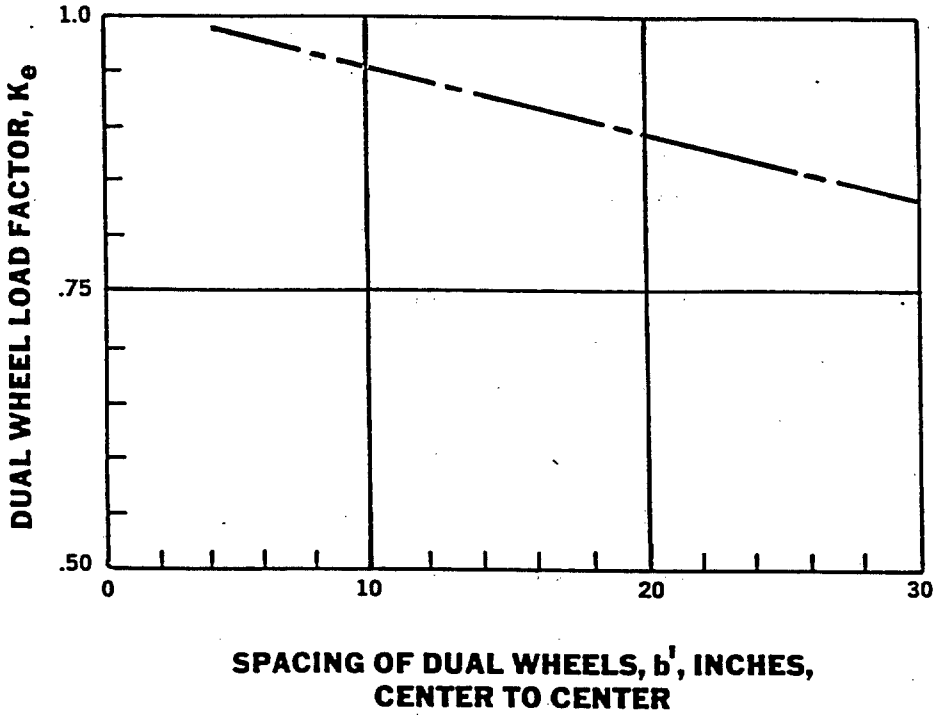

FIGURE 3. Dual wheel load factors for use with Figures 2 and 5.

3.10.1.2.4 Minimum release load. The minimum release load R, in pounds, for the release device shall be:

$$R = 1.35 \left[\frac{T + 5500 + 0.2W}{\cos \theta}\right]$$

The symbols are defined in 3.10.1.2.3. The allowable tolerance is plus 6 and minus zero percent of the load R.

3.10.1.3 Maximum catapult tow force. For weights ranging from the maximum design weight to the weight required for the primary mission, the catapult tow force shall be the maximum attainable at capacity operation from all catapults from which the airplane is required to operate. For lesser weights, the tow force shall be reduced to that corresponding to the maximum load factor of 3.10.1.4. The mean values of the tow forces of 3.7 shall be used to determine limit tow force.

3.10.1.4 Maximum catapult horizontal load factor. The maximum quasistatic horizontal load factor of the airplane CG shall be the sum of the maximum attainable tow force corresponding to the primary mission weight plus the maximum horizontal component of thrust divided by the airplane weight for the primary mission. For design of airframe structure, mass items and stores, the maximum horizontal load factor resulting from catapult launch shall be that which is derived from the flexible dynamic analysis.

3.10.1.5 Catapult run. The catapulting loads resulting from all attainable attitudes throughout the catapult run and the off-center positions of MIL-L-22589 shall be determined for all catapulting forces. The engine thrust shall be: (1) the maximum thrust with thrust augmentation devices operating if the airplane is so equipped; (2) intermediate thrust; and (3) maximum continuous thrust. The effects of pretension loads, holdback release, catapult stroke run, deck run, shuttle release, weight and CG variations shall be included.

3.10.1.6 Loading conditions prior to catapulting. The loads of this paragraph shall apply to the complete airplane while aft of the jet blast deflector (JBD) and while maneuvering or waiting to be catapulted.

3.10.1.6.1 Airplane configuration. The airplane configuration shall be such that all movable control surfaces such as wings, fins, and other components that can be moved while the airplane is on the deck, shall be in their fully folded and unfolded, swept and spread, retracted and extended positions, and all intermediate positions. Unless the systems provided for operating high-lift devices are so arranged that these devices can only be in the retracted or neutral position before wing folding or unfolding, sweeping or spreading, etc., the high-lift devices shall be in the fully retracted, fully extended and all intermediate positions. Landing gear doors and weapon bay doors shall be in the fully opened position. Wing fuel and external stores shall be all those that are critical.

3.10.1.6.2 Loads. The forces acting on the airplane shall be those resulting from the maximum attainable pressure in the hydraulic folding system, or maximum attainable system force if other than a hydraulic system is used, in combination with the following:

a. Inertial forces, directed downward normal to the deck, that result in a load factor equal to 1.5.

b. Inertial forces, directed downward normal to the deck, that result in a load factor equal to 1.5, and alternately 0.5, combined with aerodynamic forces which result from a steady wind over the deck having velocities from zero to 60 knots from all horizontal directions, plus the superposition of engine exhaust and/or thrust environment aft of the JBD defined as follows:

(1) The airplane positioned at all angles relative to the catapult track from a heading of directly into the JBD to ± 90° of this heading and at all positions aft of the JBD such that the nearest portion of the airplane is at all points laterally along the JBD and at all horizontal distances aft of JBD of 8 feet and greater, as measured from a vertical plane through the hingeline of the JBD.

(2) Another airplane positioned on the catapult in battery position at all off-center positions of MIL-L-22589, with all engines running at maximum power (afterburners and/or other thrust augmentation devices operating). This other airplane shall be the present airplane or shall be selected from the current inventory of carrier-based airplanes, whichever produces the most critical velocity and temperature effects on the airplane aft of the JBD.

3.10.2 Field take-off. Applicable to all types of airplanes. The ground roughness shall be as specified in 3.9. During each take-off, the airplane shall accelerate, using MIL power and alternately maximum take-off power, to take-off speed over all combinations of bump heights and wavelengths and soil bearing strength.

3.11 Landing. Strength is required for landing impact and landing roll-out on paved runways, semi prepared fields, unprepared fields and carrier decks and for arrested landings on carriers and on expeditionary airfields.

3.11.1 Coefficient of friction. For all types of airplanes, except those airplanes equipped with skis, the coefficient of friction between the tire and landing surface during wheel spin-up shall be all linear variations of the coefficient of friction shown on Figure 4 and lower values to represent wet and icy deck/runaway conditions. For SKI airplanes, the coefficient of friction between the ski and landing surface shall be constant at all values between 0 and 0.4.

3.11.2 Types of landings. Strength is required for each type of airplane for the types of landings defined as follows:

Types of landing	Types of airplanes
a. Touch-and-go and carrier arrested landing	CB
b. Touch-and-go and field arrested landing on prepared and semiprepared fields	CB
c. FCLP (field carrier landing practice) on prepared runways	CB
d. Field landing and arrested landing on prepared runways	CB
e. Flared field landing on prepared runways	CB, LB, STOL
f. Flared field landing on snow and ice-covered semiprepared fields	SKI
g. Trainer field landing on prepared runways	LBT
h. Vertical and short field landings on prepared, semi prepared, and unprepared fields	VTOL/STOL
i. Simulated landings by laboratory tests	All types
j. Simulated landings by flight tests	All types

3.11.3 Landing conditions.

3.11.3.1 Multivariate distribution of landing impact conditions. The design envelope of initial landing conditions shall include the variables defined in Table I for each type of airplane and landing. Such design envelopes shall be determined by combinations of the variables of Table I in the form of a multivariate distribution. The distributions of each variable, independently, shall be defined by the normal or Gaussian distribution function for all variables except sinking speed. The sinking speed distribution shall be defined by the Pearson Type III distribution function. The normal distribution function is defined by the mean and standard deviation, and the Pearson Type III distribution function is defined by the mean, standard deviation, and skewness coefficient. (For a skewness coefficient of zero, the Pearson Type III function becomes the normal distribution function). In Table I, the mean is denoted by a bar over the parameter symbol, the standard deviation by the symbol σ, and the skewness coefficient by the symbol α_3. Extreme conditions for each envelope are defined by those combinations of variables having a joint likelihood of occurrence equal to a constant as determined by the following equation:

$$PT = P(V_{TD} \gtrless V_{TD_i})P(V_E \gtrless V_{E_i})P(V_V \gtrless V_{V_i})P(\theta_P \gtrless \theta_{P_i})$$

$$P(\theta_R \gtrless \theta_{R_i})P(\dot{\theta}_R \gtrless \dot{\theta}_{R_i})P(\theta_Y \gtrless \theta_{Y_i})P(d \gtrless d_i)$$

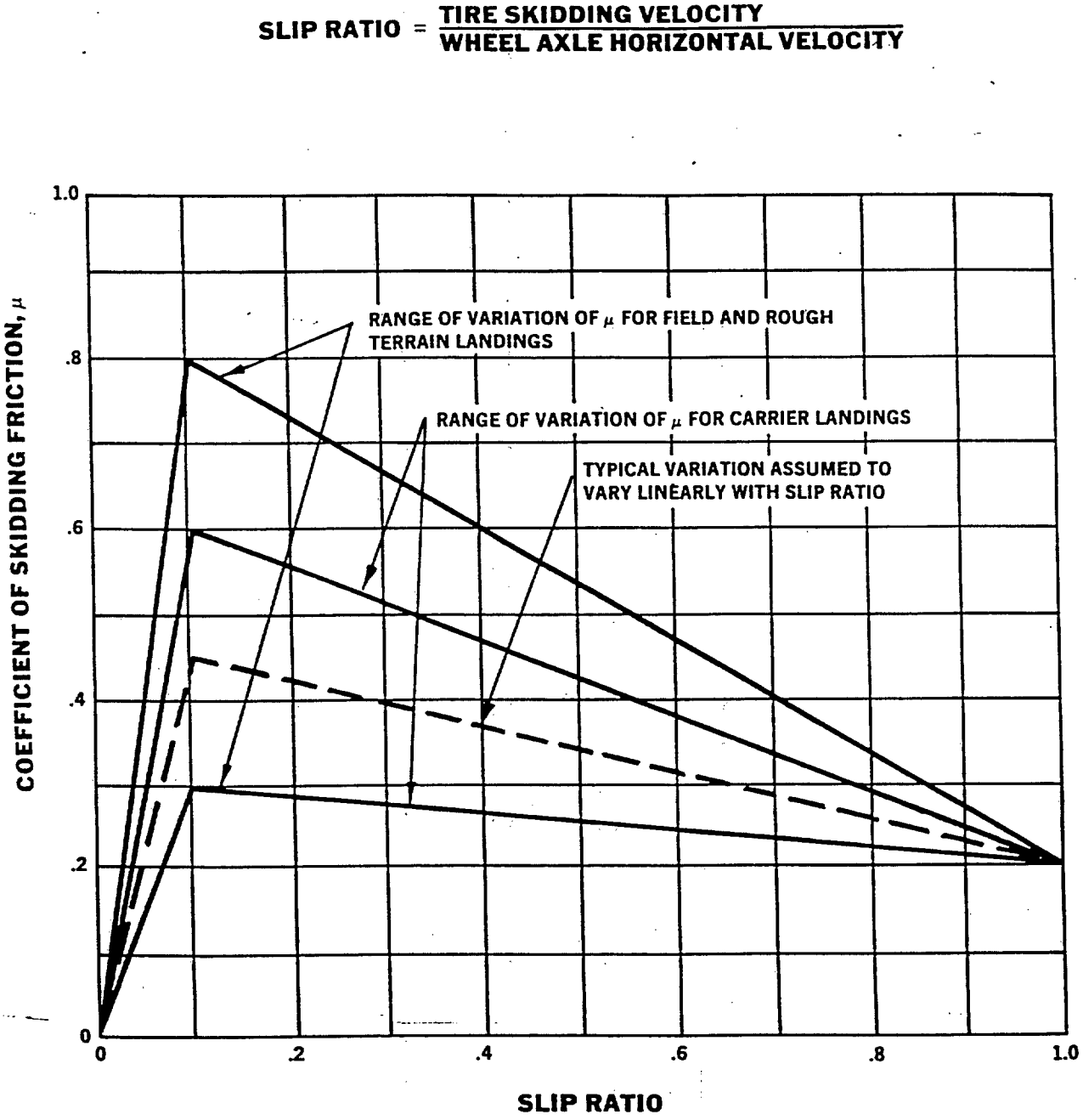

FIGURE 4. Variation of coefficient of skidding friction between the tire and landing surface with instantaneous slip ratio.

where:

a. The symbols > and < denote greater than and, alternately, less than.

b. V_{TD_i}, V_{E_i}, V_{V_i}, θ_{P_i}, θ_{R_i}, $\dot{\theta}_{R_i}$, θ_{Y_i}, and d_i are the initial conditions for each variable.

c. P is the probability that the value of the variable under consideration is greater than and, alternately, less than the given or i^{th} value of that variable.

d. The equation has the constraint that the symbol > shall be used with the ith values of the variable which is equal to or greater than the mean value and, alternately, the symbol < shall be used with the ith values of the variable which is less than the mean value.

e. The initial conditions for each variable shall be all values between the extreme minimum and extreme maximum.

f. Extreme values for each variable, independently, are those values corresponding to a probability P_0 of being greater than the maximum value or less than the minimum value. P_T is the product of the probabilities P and is equal to a constant times P_0. Values of P_0 and P_T shall be as given in Table I.

3.11.3.2 Three-point and tail-down drop test conditions. Applicable to all types of airplanes. The wing lift shall be equal to the weight of the airplane. The sinking speed shall be equal to the maximum value, and the touchdown speed shall be all speeds specified in Table I. The airplane roll angle shall be zero and, alternately, 2.0 degrees. For the three-point landing, the airplane pitch angle shall correspond to that angle for simultaneous contact of all landing gear wheels with shock struts fully extended and tires undeflected. For the tail-down landing, the airplane pitch angle shall be that angle corresponding to 90 percent of the maximum lift coefficient ($C_{L\ MAX}$) in level flight using the trimmed lift curve for the power approach configuration in free air at sea level on a tropical day.

3.11.3.3 Free-flight engagement. Applicable to CB airplanes. The airplane shall engage the arresting cable under the following conditions:

a. The sinking speeds of the airplane CG shall be all those sinking speeds specified in 3.11.3.1 that are less than the mean sinking speed.

b. For touchdown speeds less than $\bar{V}_{TD}$, the engaging speeds shall be all values up to $\bar{V}_E$, and for touchdown speeds greater than $\bar{V}_{TD}$, the engaging speeds shall be all values greater than $\bar{V}_E$.

c. The wing lift shall be 1.0 and, alternately, 1.3 times the weight of the airplane. For the latter value of 1.3, the obstruction run-over requirements need not apply.

TABLE I. Variation of Landing Impact Conditions

Symbol	Variable	Type Landing	See Paragraph 3.11.2(a)	See Paragraph 3.11.2(b)(c)	See Paragraph 3.11.2(d)	See Paragraph 3.11.2(e)(f)	See Paragraph 3.11.2(g)	See Paragraph 3.11.2(h)
		Type Airplane	CB	CB	CB	CB, LB, SKI STOL	LBT	STOL
V_A	Approach Speed (KN)	$\bar{V}_{TD}$	$1.05V_{PA}$	$1.05V_{PA}$	$1.05V_{PA}$	$1.05V_{PA}$	$1.05V_{PA}$	$1.05V_{PA}$
		$\sigma_{V_{TD}}$	4.0	5.0	5.0	5.0	5.0	5.0
V_E	Engaging or horizontal ground speed, (KN)	$\bar{V}_E$	$\bar{V}_{TD} - 20$	$\bar{V}_{TD}$	$\bar{V}_{TD}$	$\bar{V}_{TD}$	$\bar{V}_{TD}$	$\bar{V}_{TD}$
		σ_{V_E}	5.0	8.0	8.0	8.0	8.0	8.0
V_V	Sinking speed, (FPS)	$\bar{V}_V$	$0.128\,\bar{V}_E$ but not < 11.5	$0.0885\,\bar{V}_E$ but not < 6.0	$.112\bar{V}_E - 5.32$	3.6	8.5	$0.044\bar{V}_E + 7.5$
		σ_{V_V}	$0.015\bar{V}_E + 1.667$ but not < 3.0	2.0	$.007\bar{V}_E + 1.097$	1.33	2.8	$0.006\bar{V}_E + 2.5$
		α_3	0	0	0	0.5	0	0
θ_P	Airplane Pitch angle, (DEG)	$\bar{\theta}_P$	See note (a)	See note (a)	See note (a)	See note (a)	See note (a)	See note (a)
		σ_{θ_P}	2.25	2.25	2.25	2.25	2.25	2.25
θ_R	Airplane Roll angle, (DEG)	$\bar{\theta}_R$	2.0	2.0	2.0	2.0	2.0	2.0
		σ_{θ_R}	2.5	2.5	2.5	2.5	2.5	2.5
$\dot{\theta}_R$	Airplane Roll rate (DEG/SEC)	$\bar{\dot{\theta}}_R$	0	0	0	0	0	0
		$\sigma_{\dot{\theta}_R}$	3.0	3.0	3.0	3.0	3.0	3.0
θ_Y	Airplane Yaw angle, (DEG)	$\bar{\theta}_Y$	0	0	0	0	0	0
		σ_{θ_Y}	3.0	3.0	3.0	2.5	2.5	3.0
d	Off-Center engagement distance (FT)	$\bar{d}$	0	0	— —	— —	— —	— —
		σ_d	6	6	— —	— —	— —	— —
		P_o	1×10^{-3}	1×10^{-3}	1×10^{-3}	1×10^{-4}	1×10^{-3}	1×10^{-3}
		P_T	7.8125×10^{-6}	7.8125×10^{-6}	1.5625×10^{-5}	1.5625×10^{-6}	1.5625×10^{-5}	1.5625×10^{-5}

TABLE I. Variation of Landing Impact Conditions - Continued

NOTES: (a) $\bar{\theta}_p$ shall correspond to $\bar{V}_p$, to a mean wing-lift-to-weight ratio of 1.1, and to each of the following values of speeds, separately: V_{PA}, and $\bar{V}_{TD}$. The mean pitch angle $\bar{\theta}_p$ shall be determined from that trimmed lift curve for the power approach configuration in free air at sea level on ta tropical day.

(b) For flared field landings at the maximum landing design weight for all types of airplanes except LBT, the values of σ shall be reduced by 50 percent and the mean pitch attitude for the condition of the touchdown speed of $\bar{V}_{TD}$.

(c) The airplane pitching velocity $\dot{\theta}_p$ (radians per second) shall be determined as follows (nose up positive).

$$\dot{\theta}_p = \frac{g}{1.69 V_{TD}} \left(\frac{L}{W} - 1 \right)$$

where g = 32.2 FPS^2

L = airplane lift, LB

W = airplane weight, LB

(d) For CB airplanes the arresting hook shall engage the first arresting cable. Initial landing gear contact with the deck shall occur at all distances from a distance of 60 feet aft of the first arresting cable to that distance forward of the first arresting cable such that arresting hook engagement and landing gear touch down are simultaneous. The arresting force shall be all those forces from the upper to lower boundaries as derived from 3.7 for the specified engaging speeds.

d. The touchdown speeds shall be all speeds between V_{PA} and $\bar{V}_{TD}$ + 12 KN

e. The pitch attitude shall be consistent with the sinking speed, air speed, and wing lift.

f. The roll attitude shall be 0° and alternately 2.0°.

g. Arresting forces shall be all forces from the upper to the lower boundaries as derived from 3.7 for the specified engaging speeds.

h. The height of the airplane CG above the deck shall be all values corresponding to wire pickup with the hook in the full-down trail position, to wire pickup with the hook rotated so that the main landing gear wheels touch down simultaneously with wire pickup.

i. The airplane pitching velocity $\dot{\theta}_p$ shall be determined as follows:

$$\dot{\theta}_p = (g/1.69V_{TD})\ (L/W - 1)$$

where:

g = 32.2 FPS^2
L = airplane lift, LB
W = airplane weight, LB

3.11.3.4 Taxi-in engagement. Applicable to CB airplanes. The airplane shall taxi into the arresting gear at all engaging speeds specified in 3.11.3.1. The arresting forces shall be all those resulting from the specified engaging speeds applicable to arresting gear for which strength is required. The airplane pitch attitudes shall be the three-point attitude, and, alternately, the maximum tail-down attitude specified in 3.11.3.1, or that maximum tail-down attitude that can be attained at the specified engaging speeds for a lift-to-weight ratio of 1.0, whichever is less. The head wind velocity shall be zero.

3.11.3.5 Drift landing. Applicable to all types of airplanes. The shock strut compressed positions shall be all those from 15 to 90 percent of the maximum stroke of the strut. For auxiliary gears, the vertical ground reaction shall be one half of the maximum vertical load resulting from all specified symmetrical landing impact conditions, excluding obstruction runover loads, and shall act in combination with a side load of 40 percent of that vertical load. The side load shall act to the right and, alternately, to the left. If the auxiliary gear is designed to swivel or to be steerable, the specified side load shall be reacted by the swiveling, shimmy damper, or steering mechanism so as to prevent the auxiliary gear from swiveling or turning. In lieu thereof, a more rational method of reacting the specified side load on auxiliary gears through the damper or steering mechanism, as proposed by the contractor in the ground loads criteria report and accepted by the contracting activity, may be used. For the main gear, the vertical ground reaction shall be one half of the maximum vertical load resulting from all specified symmetrical landing impact conditions, excluding obstruction runover loads, and shall act outwardly and inwardly, in combination with a side load of 60 percent and 80 percent respectively, of that vertical load.

3.11.3.6 Maximum deck reactions. The design of the airplane shall be such that the maximum landing gear vertical ground loads for each landing gear unit separately, which result from all the conditions of 3.11.3.1 through 3.11.3.5 shall not exceed the allowable deck reactions determined from Figures 3 and 5 for CB and STOL airplanes, and Figures 6 and 7 for STOL airplanes.

3.11.3.7 Landing impact over obstructions. Applicable to CB, STOL and SKI airplanes unless otherwise specified in the following paragraphs. During the landing impact, the landing gear wheels or skis shall run over obstructions such as one minus cosine contours, steps, holes and carrier deck obstructions for the initial conditions of 3.11.3.1 and 3.11.3.3. The CBR of these obstructions shall be infinite.

3.11.3.7.1 Contours of one minus cosine shape. The landing gear wheels or skis shall run over discrete (single) contours having the shape described in 3.9. The minimum length of the contours shall be 2 feet and the maximum length shall be equal to the horizontal distance traveled during the compression stroking of the landing gear shock struts and tires.

3.11.3.7.2 Steps and holes. The steps and the holes shall extend infinitely in the lateral direction and the maximum length shall be infinite. The top edge(s) of the steps and holes shall have a 1/2-inch radius. For semiprepared fields, the height of the step and the depth of the hole shall be 2 inches, and the minimum length shall be 2 inches. For unprepared fields, the height of the step and the depth of the hole shall be 4 inches, and the minimum length shall be 4 inches.

3.11.3.7.3 Carrier deck obstructions. Applicable to CB and STOL airplanes. These obstructions shall be a 1-5/8 inch diameter arresting gear cable and, separately, a 1-1/4 inch high guide light cover plate.

3.11.3.8 Landing roll-out on rough fields. Applicable to all types of airplanes. The ground roughness shall be as specified in 3.9. Landing roll-out shall be defined as that portion of the landing after initial landing impact and after initial maximum compression stroking of all landing gear shock struts and tires. The airplane shall be required to decelerate during the landing roll-out using all available reverse thrust, brakes, and other deceleration devices, over all critical combinations of specified soil bearing strength, bump heights, and wave lengths. For each landing roll-out, the bump height, wave length, and contour shape in the lateral direction shall be constant, the undulations shall be continuous, and the soil bearing strength shall be constant. Separately, the airplane shall be required to traverse each specified contour shape during the landing roll-out at all critical speeds, such that angles up to 45° will occur between the path of the airplane and the lateral axis of the contour.

3.11.3.9 Arresting. The maximum aft-acting horizontal component of the arresting force shall be the upper boundary of the arresting force specified in 3.7 for the most critical arresting gear for which strength is required. The engaging speed shall be the maximum specified in 3.11.3.1. The axial arresting hook force shall act in the plane of the arresting cable through the cable groove of the hook point. The point of application of this force shall be at all lateral positions from the centerline of the hook point to the left, and alternately to the right, equal to one half the radius of the hook point. The side load resulting from these laterally displaced loads shall act to increase the side load at the hook attachment to the fuselage.

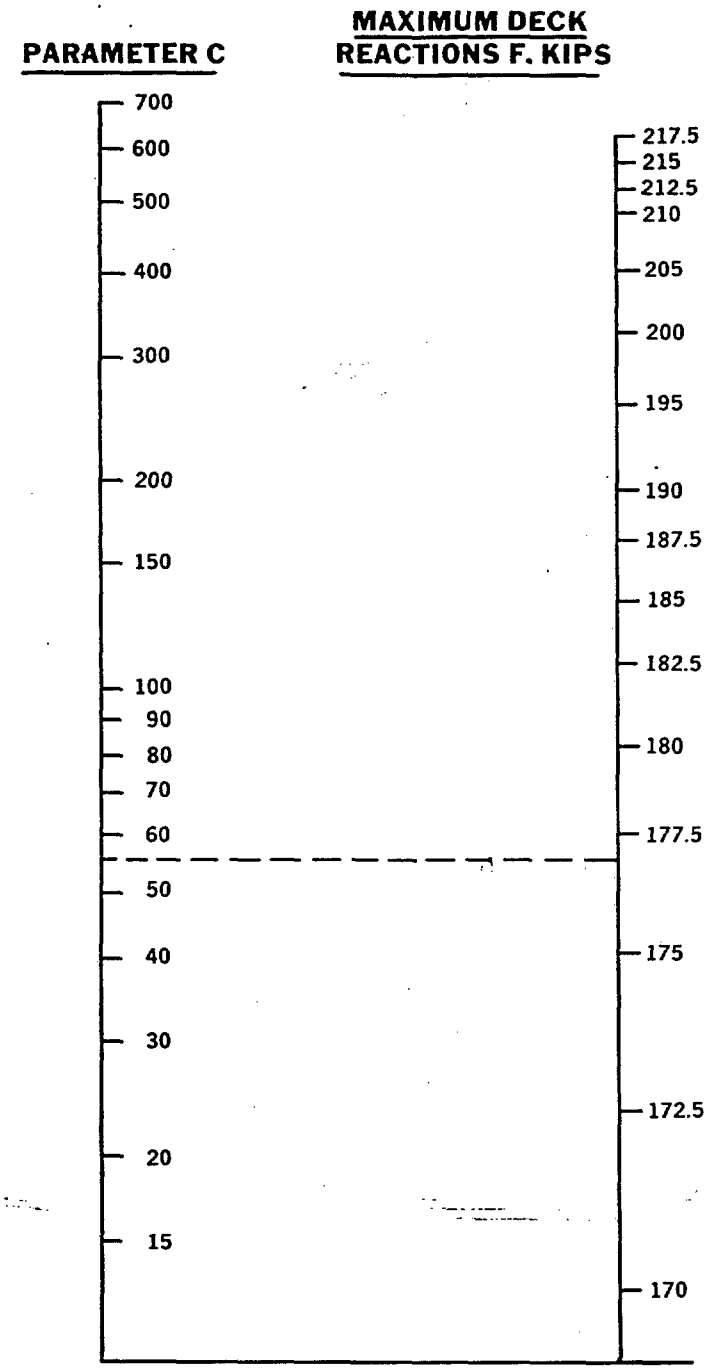

Definitions

P = Rated load of tire, LBS

p = Operational pressure of tire, PSI

r = Rated pressure of tire, PSI

$C = K\frac{P}{p}$

$K = (0.7\frac{p}{r} + 0.3)^{1/2}$

F = Maximum deck reaction from nomogram

Example-Single Wheel — Find the maximum permissible landing gear deck reaction F for an airplane having a single wheel landing gear with a 30 x 7.7 tire for which:

P = 21,300 LBS

p = 400 PSI

r = 360 PSI

$K = (0.7 \times \frac{400}{360} + 0.3)^{1/2} = 1.04$

$C = 1.04 \times \frac{21,300}{400} = 55$

From the nomogram to the left for C=55 the maximum deck reaction of 177 Kips is obtained.

Example-Dual Wheels — For dual wheels with the same size tires spaced 14 inches on centers (b') divide the reaction F obtained from this nomogram by the dual wheel load factor K_e from Figure 3:

$K_e = .925$

$F = \frac{177}{925}$ Kips = 191.3 Kips

FIGURE 5. Maximum allowable vertical deck reaction for a single landing gear - Landing area on aircraft carriers.

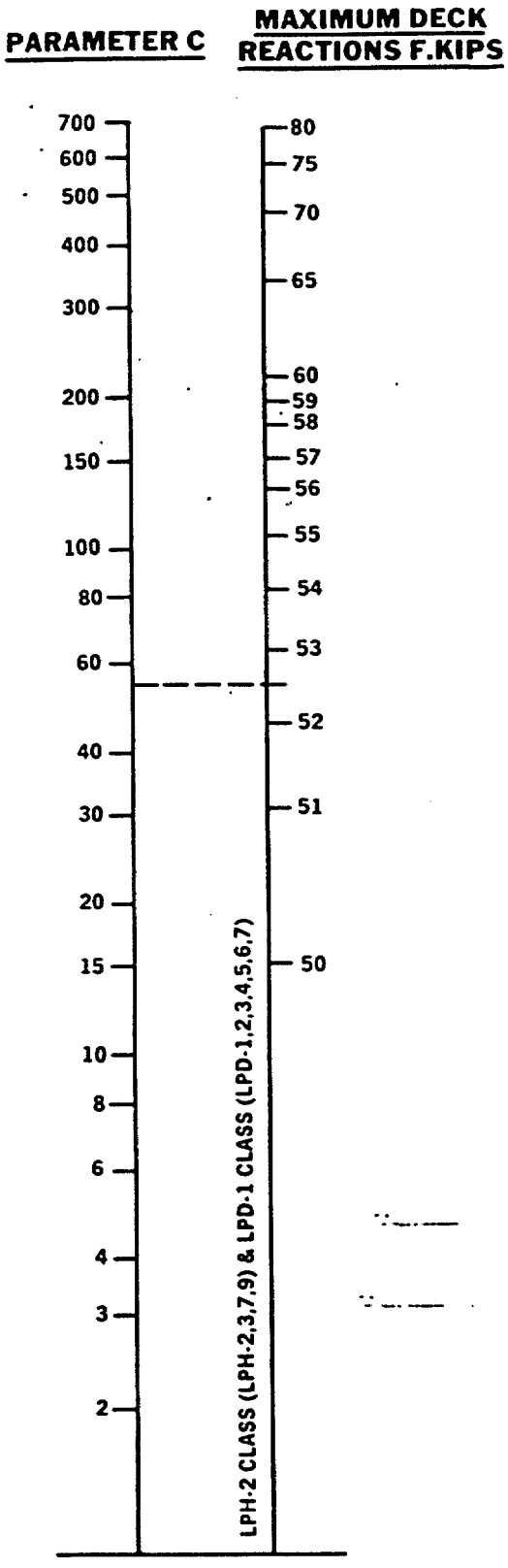

Definitions

P = Rated load of tire, LBS

p = Operational pressure of tire, PSI

r = Rated pressure of tire, PSI

$C = K \frac{P}{p}$

$K = (0.7 \frac{p}{r} + 0.3)^{1/2}$

F = Maximum deck reaction from nomogram

Example-Single Wheel — Find the maximum permissible landing gear deck reaction F for an airplane having a single wheel landing gear with a 30 x 7.7 tire for which:

P = 21,300 LBS

p = 400 PSI

r = 360 PSI

$K = (0.7 \times \frac{400}{360} + 0.3)^{1/2} = 1.04$

$C = 1.04 \times \frac{21,300}{400} = 55$

F = 52,500 LBS

Example-Dual Wheels — For dual wheels with the same size tires, spaced 16 inches on centers (b') divide the reaction F obtained from this nomogram by the dual wheel load factor K_e from Figure 7:

b' = 16" (Spacing of dual wheels)

$K_e = 0.65$

$F' = \frac{52,500}{0.65} = 80,800$ LBS

FIGURE 6. Maximum landing reaction for single landing gear with single and dual wheels for amphibious warfare ships.

$$\text{Max Dual Wheel Reaction} = \frac{\text{Max Single Wheel Reaction}}{K_e}$$

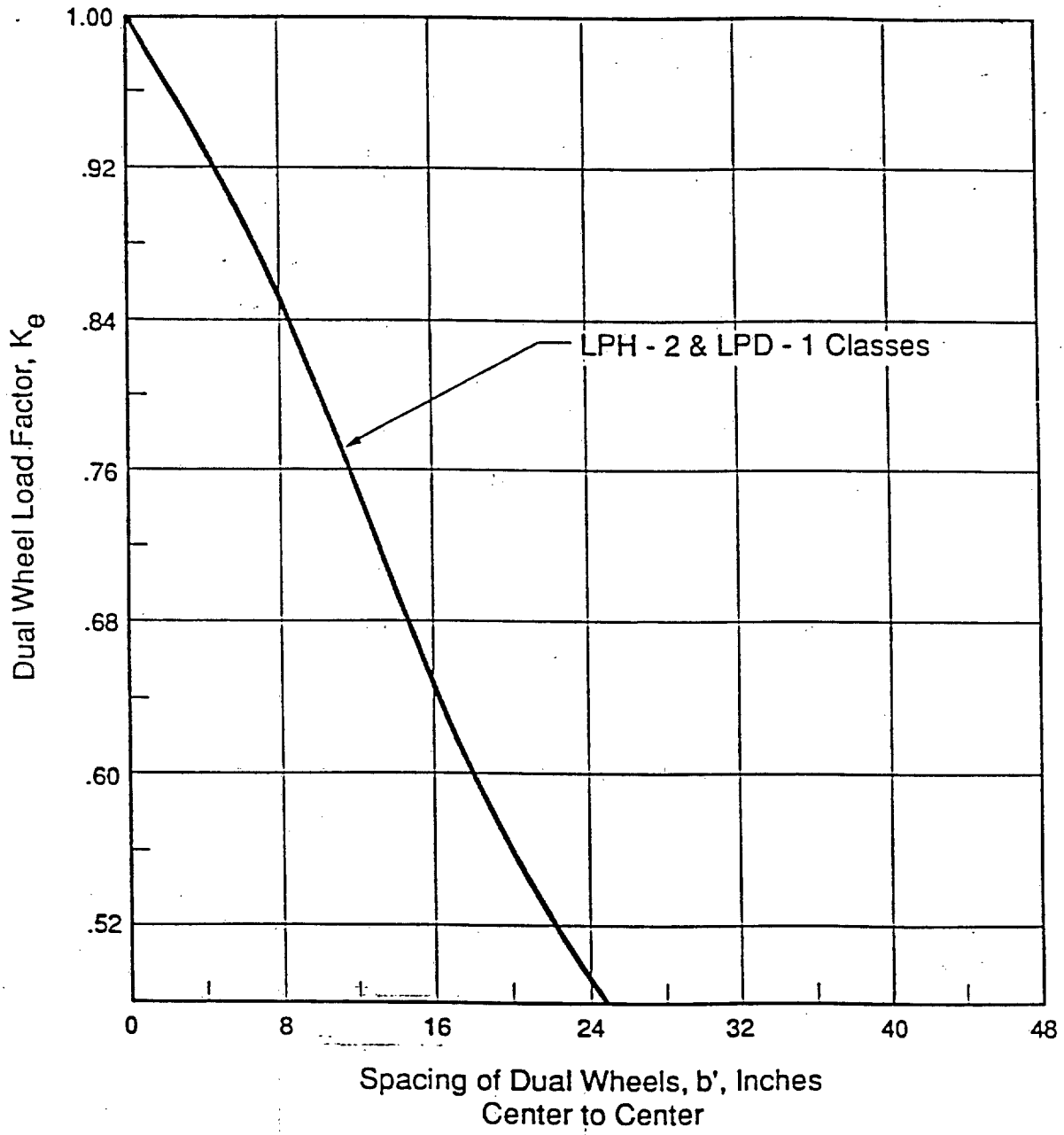

FIGURE 7. Dual wheel load factors for use with Figure 6.

3.11.3.9.1 Arrested run with side load. The airplane pitch attitudes shall be all those specified in 3.11.3.1. The landing gear wheels shall be just clear of the deck. A side load of 1.0 times the airplane weight shall act in combination with all aft-acting horizontal components of arresting hook forces in excess of 2.0 times the airplane weight. The direction of the side load shall be to the right and alternately, to the left.

3.11.3.9.2 Arrested run with brakes. The airplane shall be in the three-point attitude in a braked roll. The sum of the vertical components of the deck reactions shall be 2.0 times the airplane weight. Drag loads produced by braking at each main wheel shall be equal to 0.8 times the vertical reaction on each main wheel but the sum of these drag loads need not exceed the airplane weight. The side load at the hook point shall be zero.

3.11.3.10 Barricade engagement. Applicable to CB airplanes. For a barricade engagement the following apply:

a. The airplane shall engage the barricade on center and at all off-center distances up to 10 feet.

b. The main and nose gear wheels shall be on the deck and, alternately, just clear of the deck with shock struts fully extended.

c. The vertical engaging straps shall be symmetrically spaced, and allowed to slip or bunch along the wing leading edge due to normal engagement dynamics. The degree of slipping, bunching, and cutting of vertical straps shall be based on the detailed design of the wing leading edge sweep and configuration, and strap induced local structural failures.

d. Figures 8 and 9 illustrate the directions of the ultimate loads on surface components for symmetrical engagements. The resultant ultimate force on the airplane shall act in the plane of the barricade loading straps and shall have a drag component as specified in the type or detail specification.

3.12 Ground maneuvering.

3.12.1. Braking. Applicable to all types of airplanes equipped with wheels and brakes. The landing gear and tire deflections shall be those corresponding to the applied loads.

3.12.1.1 Two-point braked roll. The airplane attitude shall be that corresponding to the auxiliary wheel just clear of the ground. The vertical load factor acting at the CG shall be 1.2 at the landplane landing design gross weight and 1.0 at the maximum design gross weight. A drag reaction, at each wheel in contact with the ground, shall be assumed acting at the ground equal to 0.8 of the vertical reaction and shall be combined with the vertical reaction.

3.12.1.2 Three-point braked roll. The airplane shall be in the three-point attitude. The vertical load factor acting at the CG shall be 1.2 at the landplane landing design gross weight and 1.0 at the maximum design gross weight. A drag reaction, at each wheel equipped with brakes, shall be assumed acting at the ground equal to 0.8 of the vertical reaction and shall be combined with the vertical reaction.

3.12.1.3 Unsymmetrical braking. The airplane shall be in the three-point attitude. One main gear shall be assumed braked and developing a drag load at the ground equal to 0.8 of the vertical reaction at that gear. The airplane shall be placed in static equilibrium, with side loads at the main and nose gears reacting the yawing moment, and with vertical loads at the main and nose gears reacting the pitching moment. The forward acting load at the CG shall be 0.8 of the vertical reaction at that main gear which is braked. The side load at the nose gear shall be acting at the ground, and need not exceed the vertical reaction multiplied by a coefficient of friction of 0.8. The nose gear shall be aligned in a fore and aft direction.

3.12.1.4 Reverse braking. The airplane shall be in the two-point attitude with the nose gear fully extended and just clear of the ground. A forward acting drag reaction, acting at the ground equal to 0.8 of the vertical reaction, shall be combined with the vertical reaction for each gear that is equipped with brakes.

3.12.2 Turning. Applicable to all types of airplanes. The airplane shall be in the static three-point attitude. The drag loads shall be zero. The side loads on each landing gear shall act in the ground plane and in combination with the landing gear vertical loads, such that the total resultant load passes through the airplane CG. The ratio of the side load to the vertical load shall be the same at each landing gear. The sum of the side loads shall be 0.5 times the weight of the airplane, except that this sum need not exceed a value which would result in overturning.

3.12.3 Pivoting. Applicable to all types of airplanes except SKI airplanes. With brakes locked on the landing gear unit about which the airplane is rotating, the airplane shall pivot about one wheel, or in the case of multiple wheels, about the centroid of contact area of all wheels in the gear unit. The tire coefficient of friction shall be 0.8.

3.12.4 Taxiing. Applicable to all types of airplanes. The airplane shall be in the three-point attitude. The drag loads and side loads at each gear shall be zero. The sum of the vertical loads acting at the ground shall be equal to twice the weight of the airplane. Separately for the nose gear, the sum of the vertical loads, acting at the ground, shall be equal to three times the weight of the airplane.

3.12.5 Frozen ski. Applicable to SKI airplanes. The airplane shall be in the three-point attitude with each ski alternately assumed fixed. The loads and torques shall be those resulting from application of maximum engine power or thrust available at -60°F to the engine(s) on the side opposite from the fixed ski.

3.12.6 Steering. Applicable to all types of airplanes. The airplane shall be in the static three-point attitude with the nose gear swiveled in all possible positions. A torque equal to the maximum available steering torque shall be applied to the nose gear.

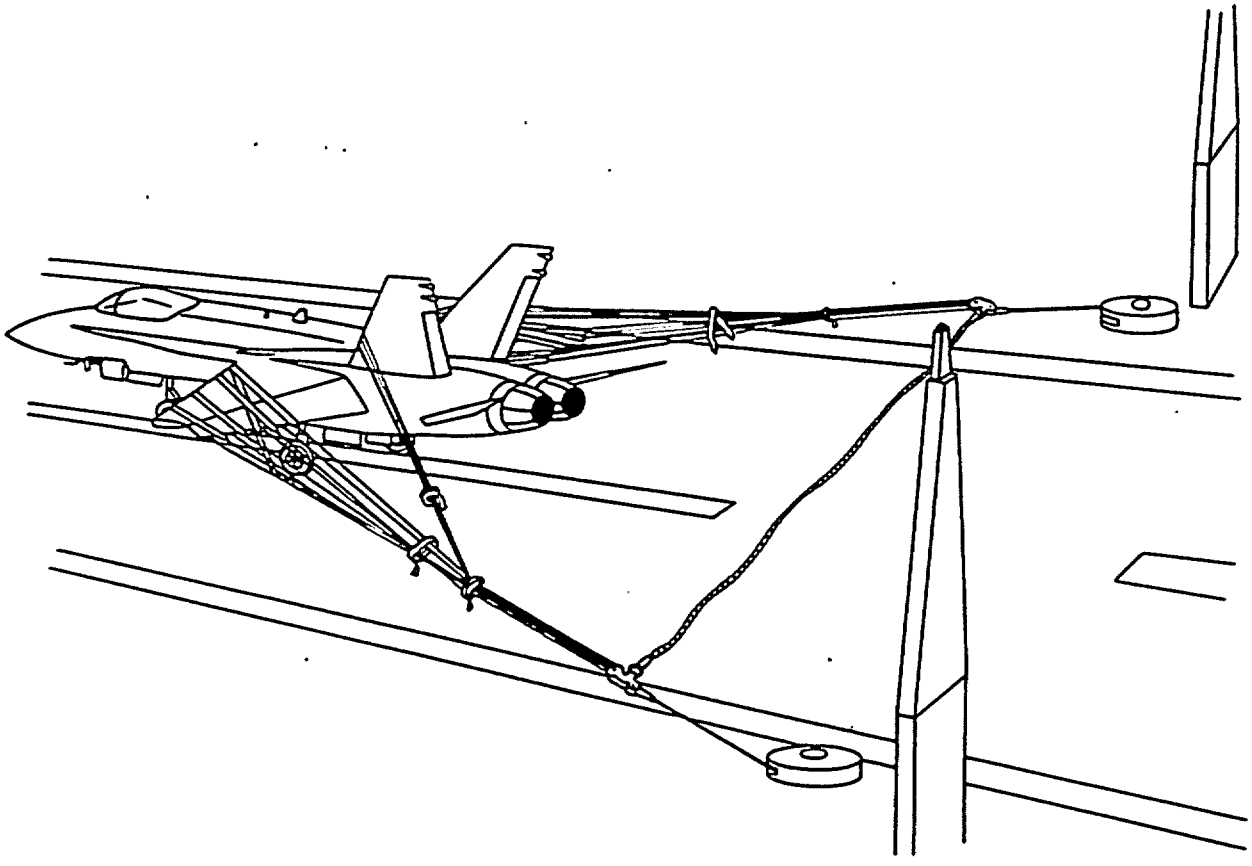

FIGURE 8. Barricade engagement - (typical).

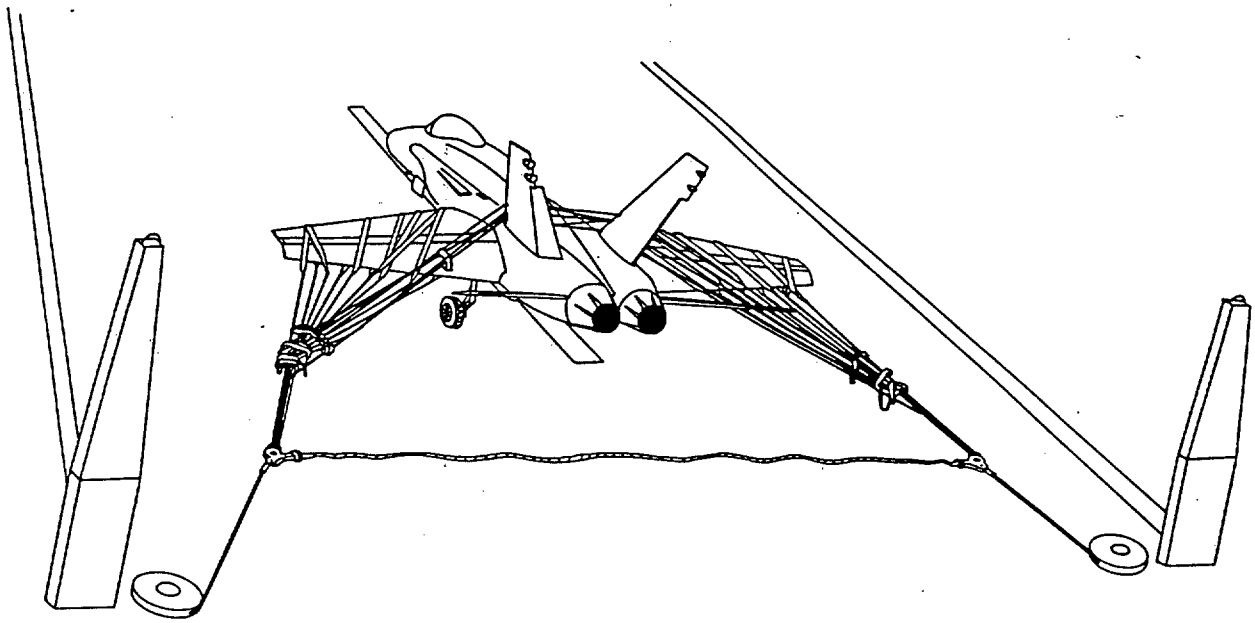

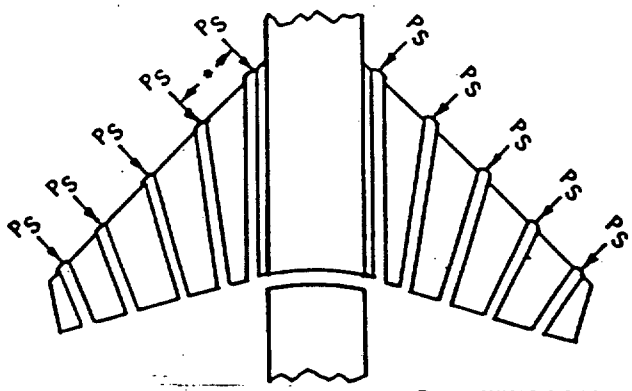

FIGURE 9. Barricade engagement - wing leading edge strap loading.

3.13 Ground handling conditions.

3.13.1 Towing. The airplane shall be in the three-point attitude. The towing conditions are specified in Table II. The values of T are defined in Figure 10. The tow loads shall act parallel to the ground. The side component of the tow load at the main gear shall be reacted by a side force at the static ground line of the main gear to which load is applied. In cases where, because of the airplane configuration or the type of auxiliary gear swiveling which is provided, the specified load directions cannot be attained, the maximum attainable angle of the specified load which will not result in side load on the auxiliary wheel shall apply. Additional loads necessary for equilibrium shall be as follows, considering each separately:

a. Inertia of the airplane.

b. For tow points located at or near a main gear unit, the tow force component parallel to the plane of symmetry shall be reacted at the axle or the bottom of the ski, as applicable. For tow points located at the plane of symmetry, the tow load shall be reacted at the axle of the auxiliary wheel or the bottom of the ski, as applicable.

3.13.2 Jacking. Jacking loads shall be those specified in Table III. The vertical load shall act singly and in combination with the longitudinal load, the lateral load, and both longitudinal and lateral loads. The horizontal loads at the jack points shall be reacted by inertial forces as to cause no change in the vertical loads at the jack points.

3.13.3 Hoisting.

3.13.3.1 Normal hoisting. For normal hoisting, the following shall apply:

a. The airplane shall be in the level attitude.

b. The vertical component of the hoisting force shall be 2.0 times the weight of the airplane.

3.13.3.2 Emergency hoisting. For hoisting from carrier-deck catwalks and ditches, the following shall apply:

a. The landing gears shall be resting on a plane having an inclination of 45° to the horizontal.

b. The airplane axis shall be oriented at all angles in azimuth.

c. All landing gear wheels shall be assumed locked and there shall be sufficient friction to keep the wheels from rolling or skidding.

d. The airplane vertical load factor shall be 2.0.

e. The direction of the hoisting cable shall be normal to the horizontal.

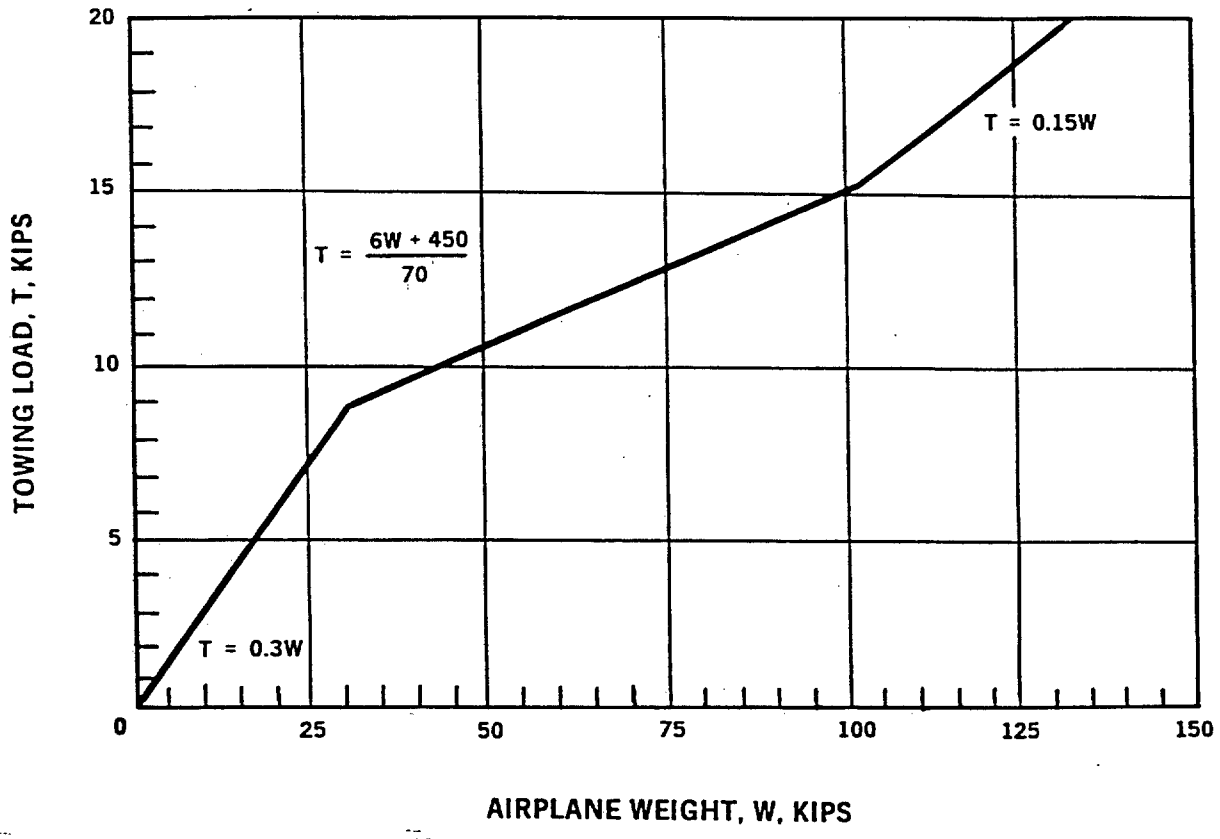

FIGURE 10. Towing loads.

TABLE II. Towing conditions.

Condition	Towing load		Rotation of auxiliary wheel relative to normal position (degree)	Tow point
	Direction from forward (degrees)	Magnitude		
1	0	0.75T		At or near each main gear
2	30			
3	180			
4	±150			
5	0	T	0	At auxiliary gear or near plane of symmetry
6	180			
7	0	T	180	
8	180			
9	±45	0.5T	±45	
10	±135			
11	±45	0.5T	±135	
12	±135			

TABLE III. Jacking loads.

Component	Landing gear 3-point attitude	Other jack points level attitude
Vertical	1.35F	2.0F
Longitudinal	0.4F	0.5F
Lateral	0.4F	0.5F

F is the static vertical reaction at the jack point.

3.13.4 Securing. Securing loads shall be as specified in MIL-T-81259. The maximum load in each cable shall not exceed 10,000 lbs.

3.14 Supplemental loads.

3.14.1 Landing-gear extention and retraction. Applicable to all types of airplanes.

3.14.1.1 Sudden extension. For the condition of sudden extension of the landing gear after rebound at landing, rolling over obstructions and passing over the deck edge subsequent to touch-and-go landings and catapulting, the following shall apply:

a. The landing gear servicing requirements of 3.8 shall apply.

b. The condition of the hydraulic fluid (foaming) in the shock strut shall be that which results from touch-and-go landings or catapulting, as applicable.

c. For CB airplanes, the deck edge shall be considered as a step.

d. The landing gear strut extension and tire compression shall be in all positions from fully compressed to fully extended.

e. To prevent failures resulting from possible malfunctions, the load factor acting on the unsprung mass of the landing gear shall be not less than 20.0.

3.14.1.2 Extension and retraction. The following loads shall act separately and simultaneously with the landing gear in all positions between fully extended and fully retracted:

a. Aerodynamic loads up to the limit speed specified for the take-off and landing configurations.

b. Inertia loads corresponding to the maximum and minimum symmetrical limit load factors specified for flight in the take-off and landing configurations.

c. Inertia loads resulting from accelerations of those parts of the landing gear that move relative to the airplane during extension or retraction. The accelerations shall be those resulting from use of maximum available power of the extension and retraction system.

d. Gyroscopic loads, as applicable, resulting from wheels rotating at peripheral speed equal to 1.3 times the stalling speed in the take-off configuration and retracting or extending at the maximum rates attainable.

3.14.1.3 Braking wheels in air. The airplane shall be airborne in the take-off configuration with the landing gear in all positions between fully extended and fully retracted. The airspeed and wheel peripheral speed shall be 1.3 times the stalling speed in the take-off configuration. The maximum static braking torque shall be applied instantaneously to stop the wheel rotation.

3.14.2 Arresting hook dynamic loads. Applicable to CB airplanes.

3.14.2.1 Hook impact and bounce. The hook impact and bounce loads shall be those resulting from the conditions of 3.11.3.1, 3.11.3.3 and the deck obstructions of 3.11.3.7.3 in combination with loads of 3.11.3.9.

3.14.2.1 Sudden extension of the arresting hook. The arresting hook shall suddenly extend from the full up position to full extension as the airplane passes over the deck edge.

3.14.2.3 Hook shock absorber. The arresting hook shall be in all positions within its limits of travel as determined by the stops. The axial force in the hook shock absorber shall be as specified in MIL-A-18717 and that resulting from the requirements of 3.11.3.

3.14.3 Load distribution on dual wheels. Applicable to airplanes with landing gear units having dual wheels. For landing gear units having wheels in tandem or multiple wheels, other than dual, the load distribution shall be as specified in the detail specification.

3.14.3.1 Symmetrical distribution. The landing gear loads shall be equally distributed among the wheels at each landing gear unit.

3.14.3.2 Unequal tire inflation. The landing gear loads resulting from the conditions specified in 3.10, 3.11, 3.12, and 3.13 on each landing gear unit shall be distributed such that 60 percent of the total wheel load is on one wheel and 40 percent on the other wheel, except that for the drift and turning conditions the 60 percent load need not be applied to the inboard wheel with the inward acting side load, or to the outboard wheel with outboard acting side load.

3.14.3.3 Flat tire landing. The wheel loads resulting from the landing conditions specified in 3.11 reduced to 45 percent of the specified loads for carrier landings and to 60 percent of the specified loads for all other landings, shall be applied to each wheel separately.

3.14.3.4 Flat tire taxiing. The wheel loads resulting from the taxiing conditions, reduced to 50 percent of the specified loads, shall be applied to each wheel separately.

3.14.3.5 Flat tire towing. The wheel loads resulting from the towing conditions shall be applied to each wheel separately.

3.14.4 Load distribution on skis. The longitudinal and treadwise distributions of the specified loads on skis shall be as follows:

a. The longitudinal distribution for vertical drag and side loads shall be as shown on Figure 11. For skis having tines, the side load distribution shall be applied to either tine where applicable.

b. Except for rolled landings, the treadwise distribution for vertical, drag and side loads shall be as shown on Figure 11 and apply to the inboard and, alternately, to the outboard direction. For rolled landings, the distribution shown on Figure 12 shall be 3 to 1 from edge to edge of the ski.

3.14.5 Tail bumpers. Applicable to all types of airplanes. A side load of 0.2 times the vertical ground load shall act in combination with the vertical and drag load. If the tail bumper is equipped with a skid or pad in lieu of a wheel, the drag coefficient of friction shall be constant at 0.4. In addition, the following criteria shall be used to determine the aircraft rotational characteristics during take-off and landing to show no deck contact if a tail bumper is not part of the aircraft configuration.

3.14.5.1 Loads for landing. The tail bumper loads are those which result from the requirements of 3.11.

3.14.5.2 Loads for over-rotation on take-off. The tail bumper loads are those which result from the motion of the airplane for which the following shall apply:

a. Grounds speeds shall be all speeds up to the take-off speed.

b. Airplane pitch attitudes and pitch velocities shall be all those that can be attained by application of full elevator control power with full aft stick force applied instantaneously, except that the pitch attitude corresponding to 0.9 $C_{L_{MAX}}$ need not be exceeded.

c. Airplane weights shall be all those from the minimum flying weight to the maximum design weight.

3.14.5.3 Load for tipback. The tail bumper loads are those which result from the motion of the airplane for which the following shall apply:

a. The airplane shall be rolling backwards at a constant speed of 5 knots.

b. The ground or deck inclination shall be plus and, alternately, minus 5° with respect to the fore-and-aft axis of the airplane.

c. The motion of the airplane shall be stopped by application of brakes.

d. The coefficient of friction between the tire and deck shall be applied instantaneously and held constant at 0.95.

e. The weight and weight distribution, airplane configuration, and thrust shall be those that are critical.

3.14.6 Maximum allowable load factor on occupants. Applicable to all types of airplanes. Occupants of the airplane shall not be subjected to a peak vertical load factor greater than 20 for all conditions required by this specification. Also the type of structure surrounding and under the occupants shall be such that in crashes following collapse of the nose gear, large amounts of energy will be absorbed by progressive failure of the structure to limit the vertical load factor at the seat to 20. This requirement is intended to provide a reasonable probability of survival predicated on human tolerance to vertical loads.

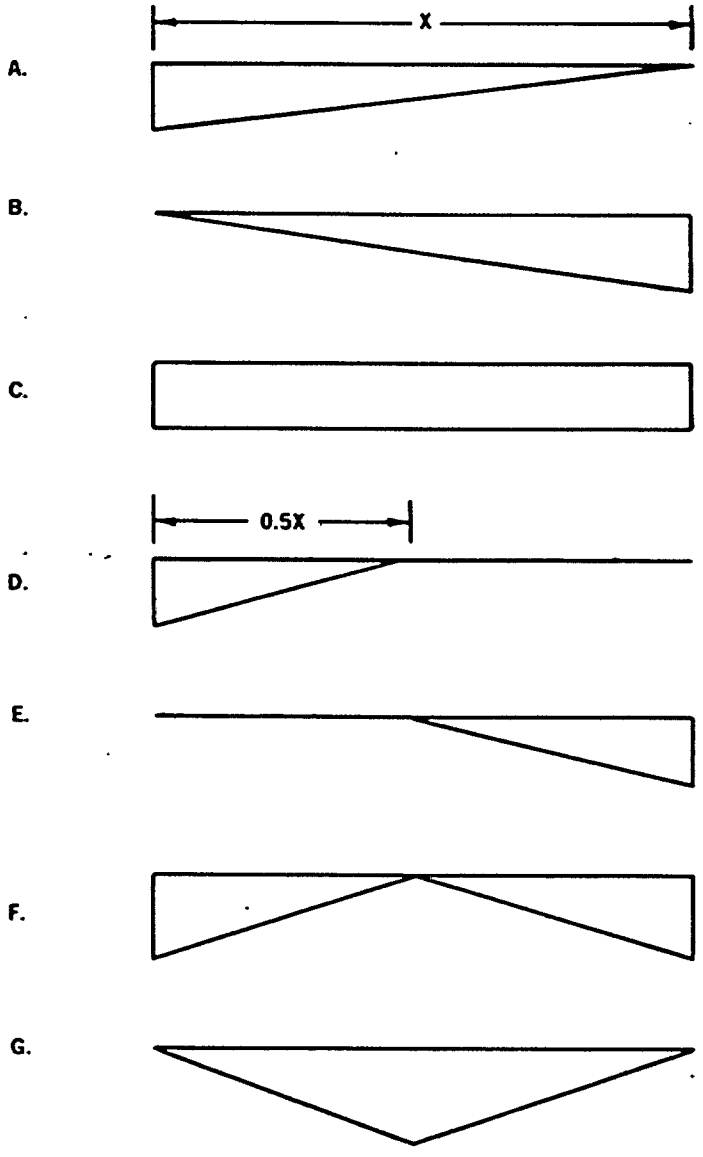

FIGURE 11. Lengthwise ski load distribution.

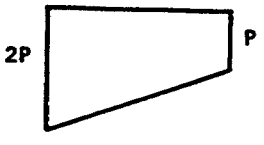

FIGURE 12. Treadwise ski load distribution.

4. QUALITY ASSURANCE PROVISIONS

4.1 Responsibility for inspection. Unless otherwise specified in the contract or purchase order, the contractor is responsible for the performance of all inspection requirements specified herein. Unless otherwise specified in the contract or purchase order, the contractor may use his own or any other facilities suitable for the performance of the inspection requirements specified herein, unless disapproved by the Government. The Government reserves the right to perform any of the inspections set forth in the specification where such inspections are deemed necessary to assure supplies and services conform to prescribed requirements.

4.1.1 Responsibility for compliance. All items must meet all requirements of section 3. The inspection set forth in this specification shall become a part of the contractor's overall inspection system or quality program. The absence of any inspection requirements in the specification shall not relieve the contractor of the responsibility of assuring that all products or supplies submitted to the Government for acceptance comply with all requirements of the contract. Sampling in quality conformance does not authorize submission of known defective material, either indicated or actual, and does not commit the Government to accept defective material.

4.1.2 Demonstration of compliance. Demonstration of compliance with each design requirement of this specification shall be verified by an integrated ground loads program consisting of design analyses, correlation of analyses with laboratory and ground tests, airplane flight tests, and data documentation.

4.1.2.1 Ground loads design criteria. A ground loads design criteria shall be established. The requirements of this specification shall be expanded and amplified so as to make them directly applicable to the airplane under procurement. If the requirements are stated in general terms and symbols, they shall be converted to specific terms and numerical values so that the array of design conditions to be investigated can be defined in as much detail as possible. When an option or an alternative method of compliance is permissible, the option or alternative method of compliance shall be chosen (see 6.2).

4.1.2.2 Ground loads determination. A ground loads flexible airframe analyses program shall be established to determine the static and dynamic loads and responses that result from the conditions of the ground loads design criteria. Subsequently, the loads shall be revised at two intervals to correlate the dynamic analyses with measured data obtained from: (a) the ground vibration and the drop tests; and (b) flight tests (see 6.2).

4.2 Laboratory tests. Laboratory tests shall be as specified in MIL-A-8867.

4.3 Flight tests. Navy flight test demonstrations shall be as specified in MIL-D-8708.

5. PACKAGING

This section is not applicable to this specification.

6. NOTES

(This section contains information of a general or explanatory nature that may be helpful, but is not mandatory.)

6.1 Intended use. The requirements of this specification are intended for use in the structural design and substantiation of airplanes. These requirements may be modified for specific models of airplanes by type or detail specifications, by flight test or demonstration requirements, and by other contractual documents.

6.2 Data Requirements All requirements for data shall be as specified on DD Form 1423, Contract Data Requirements List (CDRL), in the contract.

6.3 Deviations. The approval of analyses, test plans or procedures, and test reports that incorporate variations from the stated requirements does not, in itself, constitute approval of the deviation. Deviations from the contractually established requirements of this specification may be granted only by the contracting activity in written approval. Deviation requests are to be submitted to the contracting activity with sufficient engineering data to substantiate the need for and applicability of an alternate requirement.

6.4 Supersession data. This specification supersedes MIL-A-8863B(AS).

6.5 Definitions. For definitions of terms used in this specification see section 6 of MIL-A-8860.

6.6 Subject term (key word) listing.

Airplane weight	Flight tests
Arresting	Ground maneuvering
Barricade engagement	Ground roughness
Braking	Landing
Catapulting	Take-off
Coefficient of friction	Tipback
Deck reactions	Towing

6.7 Changes from previous issue. Asterisks or vertical lines are not used in this revision to identify changes with respect to the previous issue due to the extensiveness of the changes.

Preparing activity:
Navy - AS

(Project 1510-N052)

INDEX

INDEX - Continued

INDEX - Continued

INDEX - Continued

INDEX - Continued