Downloaded from http://www.everyspec.com

MIL-A-49067A(AV)
30 March 1984
SUPERSEDING
MIL-A-49067(EL)
18 July 1975

# MILITARY SPECIFICATION

## AIR TRAFFIC CONTROL CENTRAL AN/TSW-7A

This specification is approved for use by Avionics Research and Development Activity, Department of the Army, and is available for use by all Departments and Agencies of the Department of Defense.

## 1. SCOPE

1.1 Scope. This specification includes requirements for a transportable air traffic control tower to be used at tactical Army airfields.

## 2. APPLICABLE DOCUMENTS

2.1 Government documents.

2.1.1 Specifications and standards. Unless otherwise specified, the following specifications and standards of the issue listed in that issue of the Department of Defense Index of Specifications and Standards (DODISS) specified in the solicitation, form a part of this specification to the extent specified herein.

Beneficial comments (recommendations, additions, deletions) and any pertinent data which may be of use in improving this document should be addressed to: Avionics Research and Development Activity, ATTN: SAVAA-M, Fort Monmouth, New Jersey 07703, by using the self-addressed Standardization Document Improvement Proposal (DD Form 1426) appearing at the end of this document or by letter.

FSC 5895

Downloaded from http://www.everyspec.com



SPECIFICATIONS

FEDERAL

| | |
|---|---|
| TT-E-527 | Enamel, Alkyd, Lusterless |
| TT-E-529 | Enamel, Alkyd, Semi-Gloss |

MILITARY

| | |
|---|---|
| MIL-P-116 | Preservation, Methods of |
| MIL-C-3885 | Cable Assemblies and Cord Assemblies, Electrical |
| MIL-R-6130 | Rubber, Cellular, Chemically Blown |
| MIL-Q-9858 | Quality Program Requirements |
| MIL-P-11268 | Parts, Materials and Processes Used in Electrical Equipment |
| MIL-M-13231 | Marking of Electronic Items |
| MIL-F-14072 | Finish for Ground Signal Equipment |
| MIL-P-15024 | Plate, Tags and Bonds for Identification of Equipment |
| MIL-I-46058 | Insulation Compound, Electrical (for coating Printed Circuit Assemblies) |
| MIL-C-46168 | Coating, Aliphatic Polyurethane, Chemical Agent Resistant |
| MIL-S-52059 | Shelter, Electrical Equipment S-141( )/C |
| MIL-P-55110 | Printed Wiring Boards |
| MIL-S-55286 | Shelter, Electrical Equipment S-280( )/G |
| * MIL-C-55338(EL) | Communications Security Requirements for Avionics Communication Systems, General Specification For (Title V, Document C). |
| * MIL-C-55338/7 | TEMPEST: Limits for Radio Set AN/ARC-114A (Title V, Document C) |
| * MIL-C-55338/8 | TEMPEST: Limits for Radio Set AN/ARC-115A (Title V, Document C) |

*Classified document

Downloaded from http://www.everyspec.com



STANDARDS

FEDERAL

| | |
|---|---|
| FED-STD-595 | Color |

MILITARY

| | |
|---|---|
| MIL-STD-252 | Wired Equipment, Classification of Visual and Mechanical Defects |
| MIL-STD-454 | Standard General Requirement for Electronic Equipment |
| MIL-STD-461 | Electromagnetic Interference Characteristics, Requirements for Equipments |
| MIL-STD-462 | Electromagnetic Interference Characteristics, Measurement of |
| MIL-STD-731 | Quality of Wood Members for Containers and Pallets |
| MIL-STD-781 | Reliability Tests Exponential Distribution |
| MIL-STD-810 | Environmental Tests |
| MIL-STD-1472 | Human Engineering Design Criteria for Military Systems, Equipment and Facilities |

(Copies of specifications, standards, drawings and publications required by manufacturers in connection with specific acquisition functions should be obtained from the contracting activity or as directed by the contracting officer.)

2.1.2 Other Government documents, drawings, and publications. The following other Government documents form a part of this specification to the extent specified herein.

NSA

| | |
|---|---|
| *NACSEM 5100 | Compromising Emanations, Laboratory Test Standard, Electromagnetic |

Downloaded from http://www.everyspec.com



Avionics Research and Development Command

| | |
|---|---|
| AV-CP-5012-001A | AN/TSW-7A, Group A Test Procedures for |
| AV-CP-5013-001A | AN/TSW-7A, Group B and Group C Test Procedures for |
| AV-CP-5014-001A | AN/TSW-7A, EMI Test Procedures for |
| *AV-CP-5015-001A | AN/TSW-7A, TEMPEST Test Procedures for |

DRAWINGS

| | |
|---|---|
| ES-D-212335 | Cable Assembly Electrical, Power |
| ES-D-212336 | Cable Assembly Electrical, Power, Stub |
| SPI 1G00193 | Special Packaging Instructions |

(Copies of specifications and drawings required by manufactures in connection with specific acquisition functions should be obtained from the contracting activity or as directed by the contracting officer.)

2.1.3 Order of precedence. In the event of a conflict between the text of this specification and the references cited herein, the text of this specification shall take precedence.

*Classified document.

Downloaded from http://www.everyspec.com



3. REQUIREMENTS

3.1 Procurement model. A procurement model of the equipment will be available for inspection by prospective bidders. It will be lent to the successful bidder if so stated in the contract. Unless otherwise specified herein or in the solicitation, physical construction of the equipment shall conform to the model and the equipment shall incorporate all features of the model. (Note: In case of conflict between specified performance characteristics for the equipment and the performance of the model, the specified performance characteristics govern).

3.1.1 Shelter window. The shelter window screens shall be of such construction and design as to preclude their breaking loose or flexing enough to cause damage to the windows under wind loading conditions of up to 70 knots with gusts to 105 knots.

3.1.2 Cover panels. The cover panels for the shelter ventilation ports and entry panels shall be capable of being opened and raised approximately 165°. Round the corners or use rubber protectors to reduce personnel injury.

3.1.3 Ventilator outlets and air deflecting louvers. The ventilator outlets and the air deflecting louvers in the shelter shall be designed so as to avoid excessive air drafts on controllers.

3.1.4 Platform access stairway. The platform access stairway shall comply with MIL-STD-1472A, paragraph 5.7.7. It shall be secured so as to prevent the bottom of the stairway, which rests on the ground, from slipping away from the shelter. The same access stairway shall be usable whether the shelter is truck-mounted or jack-mounted.

3.1.5 Stops and slides. Stops and slides on all storage drawers shall be provided. Provide locking clips instead of captive screws to secure drawer closed. Either round the drawer corners or provide rubber protectors to prevent personnel injury.

Downloaded from http://www.everyspec.com



3.1.6 Door handle. A single door handle to operate all three door latches shall be provided.

3.1.7 Glass windows. Electrically heated glass windows in the shelter as per model shall be provided.

3.1.8 Shelter. The shelter shall contain two (2) Light Guns mounted in the corners above the power supply rack and signal entry panel and mounted so that there is no possibility of their breaking the tower window. They shall be lightweight, capable of one hand operation, and operable on 28 VDC, either as primary or back-up input power.

3.1.9 Military standard altimeters. Two each Military Standard Altimeters (GFE) shall be mounted on the data controller console in the shelter, vented through a screened port to the outside atmospheric pressure. A portable aneroid barometer, contractor furnished shall be suitable for verifying the accuracy of the altimeters.

3.1.10 Thermometer. A thermometer to measure outside air temperature shall be provided. Also a density altitude chart shall be mounted on the console.

3.1.11 Nighttime operation. Red night lighting and a means for dimming all interior lighting used for nighttime operation to such a level as to preserve the operator's dark adaptation per MIL-STD-1472A, para 5.2.1.1 shall be provided. The dimmer potentiometers used shall have a knob. The use of a slotted screwdriver adjustment is unacceptable.

3.1.12 Instructions for packing and unpacking shelter. Complete instructions for packing and unpacking the shelter and equipment pallet for field transit shall be provided in the appropriate manual. The instructions shall include step-by-step narrative description with photos and line drawings as required. Additionally, a separate setup sketch and check list shall be provided with the shelter.

Downloaded from http://www.everyspec.com



3.1.13 Tools. Tools which are required for unpacking the equipment shall be packed separately and secured with the shelter. The tool box shall include a D-handled shovel and a spare sledge hammer handle.

3.1.14 Entry. The shelter shall be capable of entry and operation when mounted on a 2½ ton truck.

3.1.15 Shelter jacks. The shelter jacks shall be of such design as to permit them to be readily affixed to the shelter when it is mounted on a 2½ ton truck. Additionally, they shall permit elevating the shelter to a height of approximately 12-18" above the truck bed so that the truck may be removed. (Note the height of the 2½ ton truck bed varies from 48" to 51½" above the ground, depending upon the load.) Additional guys may be used to stabilize the shelter in the raised position.

3.1.16 Ratchet handles. The attachment of the ratchet handles to the shelter jacks shall be designed so that the ratchet cannot fall off.

3.1.17 Jack adapter brackets. Four (4) jack adapter brackets on the Skid platform shall be provided to which the shelter jacks will interface. The brackets shall be designed so that the shelter jacks when affixed to the Skid platform will enable it to be elevated above and/or lowered into the body of a 2½-ton truck bed.

3.1.18 Shelter mounting pads. Shelter mounting pads shall be installed on the shelter to permit attaching the M-720 dolly set to the shelter. The details for attaching the dolly set to the shelter shall be fully described in the appropriate technical manual.

3.1.19 Dzus fastener strips. Standard Dzus fastener strips shall be used for mounting the radios in the racks.

Downloaded from http://www.everyspec.com



3.1.20 Adapter trays. Adapter trays or channels used to support and secure the radio sets shall be of such construction as to conform to the form factors (length, width, height, rear connector clearance and fastening points) of the radio sets which they contain.

3.1.21 Cables. Cables of sufficient length to enable the radio to be operated when the radio chassis are extended on their slides shall be provided.

3.1.22 Radio. The radios, with their RF filters, shall be located in some logical, numerical sequence such as UHF-1, VHF-1, etc. Connectors on the signal entry panel of the shelter and on the colinear antenna shall be placed in a corresponding numerical sequence and labeled.

3.1.23 RT-698/ARC-102. The RT-698/ARC-102 shall be mounted for use in a weatherproof container on the skid platform in order to maintain noise levels within the Shelter to an acceptable level.

3.1.24 Paralleled crash alarm buttons. Two paralleled crash alarm buttons shall be provided. One shall be located between the local and data controllers and the other between the data and ground controllers. These switches shall be of the guarded toggle type. The alarm circuitry shall be such that the operator may elect to wire up either a local battery alarm system (zero ohm contact, powered at the alarm itself) or a common battery system using 28VDC from the TSW-7A, by selection of the proper pair of external "crash alarm" binding posts. The binding posts shall be labeled.

3.1.25 Supervisor headset. A single access position for the supervisor headset shall be provided. It shall be located beside the shelter access door and shall have a headset monitor and override any of the controller positions. In addition, a supervisor's headset connector shall be located on each of the three consoles to permit the supervisor to monitor or override that controller's position.

Downloaded from http://www.everyspec.com



3.1.26 Push-to-talk switches. The headset and microphone push-to-talk switches shall be spring-return type switches.

3.1.27 Tuning controls. Metal guards shall be installed over the RF filters' tuning controls to prevent accidental detuning by the controller's feet, knees, etc.

3.1.28 Thermostatic control. Space and cabling for the auxiliary gasoline heater thermostatic control shall be provided in the shelter.

3.1.29 Remote tuning controls. Remote tuning controls for the AS-1729 antenna shall be provided in the shelter.

3.1.30 Environmental control unit (ECU). The thermostat assembly for the environmental control unit (ECU) shall be installed in the shelter. The opening left in the ECU housing by removal of the thermostat assembly shall be covered with a protective cover plate. The contractor shall furnish any extension cables required for the ECU thermostat assembly.

3.1.31 Hot-bonded honeycomb core. The Contractor may utilize Hot-Bonded Honeycomb Core Sandwich panel for shelter construction, provided that such use meets all First Article requirements.

3.1.32 Assembly and disassembly. The contractor shall assemble and disassemble the system into emergency, limited, and full operating configurations as specified in 4.10.12.

3.1.33 Fork lift of shelter and pallet. The contractor shall perform the test specified in 4.10.13.

3.2 Parts, materials and processes. Electronic components, parts, devices, materials, techniques and technologies shall conform with Specification MIL-P-11268. Should any electronic part considered for usage not conform to MIL-P-11268, it should be submitted for approval in accordance with MIL-STD-965 procedures and shall meet the requirements of Category II, MIL-E-5400.

Downloaded from http://www.everyspec.com



3.2.1 Microelectronic devices. Microelectronic devices shall be MIL-M-38510 Class B as a minimum. When a required device is not covered by MIL-M-38510, a new specification or drawing shall be prepared. The nearest MIL-M-38510 specification sheet shall be used as a guide. As a minimum, all devices shall be required to pass the MIL-STD-883 Class B requirements in accordance with Method 5004, and Group A and B lot quality conformance in accordance with Method 5005, and shall have at least initial verification of the Group C and D requirements of Method 5005. Such parts are non-standard and shall require non-standard part approval from the acquiring activity.

3.2.2. Discrete semiconductor devices. Discrete semiconductor devices shall be MIL-S-19500 level JANTX as a minimum. When a required device is not covered by MIL-S-19500, a new specification or drawing shall be prepared. The nearest MIL-S-19500 specification sheet shall be used as guide and the quality assurance requirements shall be specified in accordance with MIL-STD-750 to assure the device is the equivalent of level JANTX or better. Such parts are non-standard and shall require non-standard part approval from the acquiring activity.

3.2.3 Passive and other electrical/electronic and electro-mechanical parts. These parts shall be selected from Established Reliability (ER) Military Specifications (and shall meet, as a minimum, the ER failure rate level of "P" or higher (i.e., R, S, etc)). When a part is not covered by an ER specification and a new specification or drawing is required, the nearest ER military specification for the part shall be used as a guide, and equivalent QA and screening requirements shall be specified. Such parts are non-standard and shall require non-standard part approval from the acquiring activity.

3.2.4 Floor covering. A floor covering shall be provided which meets applicable requirements of MIL-S-52059B, Paragraph 3.4. The adhesive shall meet both the electrical insulation requirements of Paragraph 3.4 and shall not cause the floor covering to curl when the shelter is immersed in water during fording or afterwards. "Scotchtread" or equivalent as used in the model is satisfactory.

Downloaded from http://www.everyspec.com



3.3 First article. The Contractor shall furnish the specified number of First Article samples on order as required by the Invitation For Bid and Contract (see 4.4 and 6.2).

3.4 Cable assemblies. Length of all cable assemblies shall be specified with "plus" tolerances only. Power and audio frequency cable and cord assemblies shall conform to MIL-C-3885.

3.5 Finish protective. Equipment shall be given protective finish in accordance with MIL-F-14072B(EL). This includes finish of hardware, such as handles, hinges, screws, etc., and necessary touch up after mounting. Finish as follows:

a. Entire exterior. The equipment shall be given a protective coating in accordance with MIL-F-14072B(EL) Film Designation V. The final film on the exterior shall be lusterless forest green prepared in accordance with requirements of MIL-C-46168A.

b. Interior. Finish steps 1, 2 and 3 of P513.1 per MIL-F-14072 with the final film as follows:

(1) Ceiling, ceiling facing, window frames, door and air ducts, lusterless black enamel per TT-E-527; color chip No. 37038 of Federal Standard No. 595.

(2) Floor, lusterless gray enamel per TT-E-527, color chip No. 36118 of Federal Standard No. 595.

(3) Door and door brace, as in "a" above to match exterior.

(4) Walls, up to but not including the air ducts and doors, semi-gloss green enamel per TT-E-529, chip No. 24533 of Federal Standard No. 595.

(5) Racks shall be finished in accordance with P513, steps 1, 2 and 3 of MIL-F-14072 w/final film to be lusterless black per TT-E-527, color chip no. 37038 of Fed Std No. 595.

Downloaded from http://www.everyspec.com



3.6 Marking.

3.6.1 General. Marking shall conform to MIL-M-13231 and MIL-P-15024 (See 4.5).

3.6.2 Visibility. Wherever practicable, parts shall be so mounted that their identification marking will be readily visible with minimum disassembly of the equipment.

3.6.2.1 Label. A center of gravity label on the shelter and loaded equipment pallet shall be provided. A pallet loading and tie-down diagram shall be included.

3.6.3 Serial numbers. Units which are contractor furnished and assigned an approved nomenclature and the AN/TSW-7A shall be serial numbered.

3.7 Interchangeability (4.11). Like units, assemblies, subassemblies and replaceable parts shall conform to requirement 7 of MIL-STD-454 and shall be physically and functionally interchangeable, without modification of such items or of the units.

3.8 Printed wiring assemblies (See 4.5). Printed wiring assemblies shall be processed for compliance with the procurement model and MIL-P-55110 and MIL-STD-275.

3.9 Conformal coatings (See 4.5). Printed wiring assemblies shall be conformally coated with a coating material which conforms to MIL-I-46058, Type ER (Epoxy) or Type PUR (Polyurethane). The coating shall be applied to both sides of the cleaned printed wiring assembly including the component leads. These assemblies shall be cleaned of flux and other

Downloaded from http://www.everyspec.com



contaminants prior to application of coating. Cleaning compounds shall have no deleterious effects on any part of the printed wiring assembly. The conformal coating shall be compatible with all parts of the printed wiring assembly and the thickness shall be 0.0035 inch nominal tolerance. The coated assemblies shall show no visible bubbling, blistering, wrinkling, cracking, pinholes, or peeling of the coating material or corrosion of printed conductors. Printed wiring assemblies shall be adequately masked or otherwise protected in such a manner that application of conformal coating does not degrade the electrical performance of the assembly. Assemblies having adjustable components shall not have the adjustable portion covered with the coating. Electrical and mechanical mating surfaces such as connector contact points, test points, screw threads, bearing surfaces, etc., shall not be coated. When masking those areas which are not to be coated, and tape is used, the tape shall be an electrical grade. When the printed wiring assembly utilizes glass encased components, such components shall be protected against breakage by the conformal coating by covering the component with thin pliant buffer material, prior to coating, such as polyvinylidene fluoride or silicone rubber. This buffer material shall be compatible with the conformal coating material and all parts of the printed wiring assembly. In addition, the buffer material shall be fungus and flame resistant; and shall be clear transparent so markings on the component shall be visible.

3.10 Power (4.7).

3.10.1 Primary power (4.7.1). The equipment as a system shall be capable of operating from a nominal 120/208 volts $\pm$ 10%, 50/60 Hz, 3 phase, 4 wire plus ground, primary power source. With this AC power the DC shall not vary more than 10%. The total AC load shall not exceed 20 KW.

3.10.1.1 Switchguards. Switchguards shall be provided on the power distribution box and power supplies to prevent the switches from being kicked on or off inadvertently.

Downloaded from http://www.everyspec.com



3.10.1.2 Generator sets. Two each PU-405A/M (15 KW, diesel) trailer mounted generator sets, for system fabrication and testing will be made available, on loan.

3.10.2 Emergency power (4.7.2).

3.10.2.1 Emergency operation (4.7.2.1). Emergency 24 volt DC power from the battery shall automatically be connected upon loss of primary power and shall supply adequated power to operate the telephone group, at least one light gun and emergency lighting for a period of at least one hour. In addition to the above, adequate power shall be supplied to operate the communication equipment a minimum of 15 minutes to the extent of providing full operation capabilities of at least one UHF-AM transceiver, one VHF-AM transceiver and one VHF-FM transceiver.

3.10.2.1.1 Battery. The battery shall be located in a separate compartment accessible from the outside and sealed off from the tower interior. The compartment shall be vented to the outside through a vanaxial blower powered by an explosion-proof motor that is activated whenever the battery charger is turned on. A battery connector shall be located within the compartment to permit the battery to power the system or to be charged while in a standby mode.

3.10.2.2 Battery charging system (4.7.2.2). The battery charger shall be capable of delivering a battery charge at a rate up to 12 amperes. The battery charger operates from DC power derived from the regulated power supplies or a 28 volt DC auxiliary power unit (APU).

3.10.2.3 Truck battery power (4.7.2.3). A cable and facilities shall be provided for operating emergency radios from the 2½ ton truck battery.

3.10.3 DC power and associated transfer equipment (4.7.3). The shelter shall contain two 28-volt DC regulated power supply systems for operation of all equipment requiring 28-volt DC power. Provision shall be included for operating either supply as the "operational" or "standby" DC power source. Provision shall be made for automatic transfer from the "operational" to the "standby" supply, without interruption of operational duties, in the event of degradation or failure of the

Downloaded from http://www.everyspec.com



operational supply. Further, the transfer equipment shall automatically and/or manually transfer the load to the emergency battery power source, in the event of loss of shelter primary AC power or loss of both 28-volt DC power systems. The transfer equipment is also required to automatically and/or manually transfer the full operational DC load back to the operational power supply when power is restored. The transfer control circuitry shall include the following features:

a. Relay circuitry to select whichever DC power supply is turned on first as the prime DC power supply. When the second DC power supply is turned on, it shall automatically be available as the standby power supply.

b. An emergency selector switch to overide the automatic function and place the load on the emergency battery power source.

c. Three amber indicating lamps, one each for the two 28 volt DC power supplies and one for the emergency battery supply, to indicate power available when illuminated.

d. Three green indicating lamps, one each for the two 28-volt DC power supplies and one for the emergency battery supply, to indicate when the power source is connected to the load.

e. An aural alarm to alert personnel when a transfer of power has occurred. A switch is provided for resetting the alarm.

f. A non-locking pushbutton reset switch for resetting the power supply transfer circuits to the initial (before transfer) condition. The reset shall be employed after a defective power supply has been repaired and reconnected or after the supply selector switch has been operated.

g. The standby 28-volt DC power supply shall be used for operation of the HF-SSB Radio Set.

h. Switch guards to prevent inadvertent switching of the DC supplies.

Downloaded from http://www.everyspec.com



3.10.4 DC power supply (4.7.4). Power Supply PP-6187/TSW-7 shall provide under load an output of 27.5 ± 1 VDC with a current output of 50 amperes.

3.10.5 Switching. A means of switching between DC power supplies shall be provided such that the HF radio (presently operable only from the standby power supply, and totally inoperable in the event of the failure of either power supply) may, at the operator's choice, be powered by either power supply, together with a limited number of radios and DC ancillary equipment which can be safely operated with the remaining DC current (approximately 15 amps @ 27.5V). The use of a DC, "Tactical Load" bus to power pre-selected radios is acceptable, however, means must be provided whereby the HF radio may be shut off and all air-ground radios (3 each sets in each band) operated instead.

3.11 System operation (4.8).

3.11.1 Local, data and ground controller position communication selection. (4.8.1). The local, data and ground operator positions shall each have the capability of selecting any of the ten transceiver. When one or more of the transceivers is selected, "in use" indication lamps shall light on all three selector switch panels. These indicator lamps shall be ontrolled by three-position selector switches and energized in the 2 and 3 positions. In position 1 the audio output of the microphone preamplifier and respective key circuit is connected to the input of the transmitter. It also connects "in use" to all three operators' positions and connects audio output from the receiver to the speaker. Position 3 shall perform the same function as position 2 with the exception that the audio output of its speaker shall be connected to the operator's headset.

3.11.2 Supervisor facility (4.8.2). The supervisor shall have the capability of monitoring any or all three controllers and if necessary, pre-empt transmission originating from any of them.

3.11.3 Radio operational tests (4.8.3). The transceivers shall have a Forward Output Power (PF) at the signal entry panel and Sensitivity as follows:

Downloaded from http://www.everyspec.com



| PF (Watts) | | Sensitivity input (at Signal entry panel) |
|---|---|---|
| UHF/AM | 3.0 | =10.2 µv (1kHz, 30% Modulation) |
| VHF/AM | 3.5 | = 8.0 µv (1kHz, 30% Modulation) |
| VHF/FM | 4.0 | = 1.8 µv (1kHz, ±8kHz Deviation) |
| HF/SSB | 40.0 | = 0.7 µv (1kHz, 30% Modulation) |

With the Sensitivity Inputs shown, a 1000 Hz tone shall be heard and the signal shall have a 10 dB minimum (S+N)/N ratio.

3.11.4 Speaker/amplifier assembly (4.8.4). The speaker amplifier shall have a flat frequency response from 200 to 5,000 Hz. The output of the amplifier shall be at least 2.5 watts with no more than 10% distortion when an input signal of 50 milliwatts is applied to it. The speaker/amplifier shall contain a volume control which will provide no audio output in the extreme counter-clockwise position and maximum audio output in the extreme clockwise position.

3.11.5 Speaker/amplifier indicator lights (4.8.5). Indicator light associated with each speaker/amplifier shall respond to audio signals, and indicate to the operator which speaker is in operation. Each light shall be of a color corresponding to the associated selector switch.

3.11.6 Headset mixing circuit (4.8.6). The impedance matching audio mixing circuits shall insure normal audio level when one or more of the receivers are selected in the headset position. The impedance match shall be maintained regardless of the headset loads and regardless of the combination of receiver outputs connected to one headset. The T-pads included in the headset output circuit shall be capable of adjustment by the operator to adjust the audio level in the headset.

Downloaded from http://www.everyspec.com



3.11.7 NAVAIDS remote monitor (4.8.7). The NAVAIDS remote monitor shall provide indications of operational status and status changes of NAVAIDS equipment located up to five (5) miles from the remote monitor. Inputs to the monitor shall be provided via one (1) pair of standard field telephone wires.

3.11.7.1 NAVAIDS status indication. The NAVAIDS remote monitor shall provide the following aural and visual indications:

| | |
|---|---|
| Steady green light | Normal NAVAIDS operational status |
| Steady red light | NAVAIDS failure |
| Aural alarm | Sounds for status change from either normal to failure or failure to normal. |

The aural alarm reset button when depressed shall silence the alarm and shall reset the device to permit sensing of the next status change. The disable switch shall disable the aural alarm and the lamp test function shall test the status indicator lamps. The aural alarm indication shall meet the requirement of 5.3.3 and 5.3.4 of MIL-STD-1472.

3.11.7.2 Bail out alarm. Closure of the Bail Out Alarm Switch shall change the resistance at the telephone signal entry panel from not less than 10K ohms to not more than 20 ohms. The Bail Out protective device shall prevent accidental closure of the bail out alarm switch.

3.11.8 Telephone group (4.8.8). The telephone equipment group shall provide ground communications between the AN/TSW-7A and external facilities over any of seven (7) landlines and three (3) direct lines.

Downloaded from http://www.everyspec.com



3.11.8.1 Telephone landlines (4.8.8.1). Control of each of the seven telephone circuits shall be possible from either or both control boxes on the operator's console. Separate control and identification functions for each line shall be provided on the control box. Voice communication shall be conducted by means of a telephone handset connected to the telephone control box. The handset shall include a push-to-talk switch to open the microphone circuit. The telephone circuit for each line shall be capable of operation with local battery, common battery or common battery-dial telephone system independent of the type of system connected to the other lines. Visual and audible signalling shall indicate the presence of an incoming call (line signal lamps shall flash in this condition). There shall be an on-off switch to silence the audible signal. A visual signal at each key box will indicate when a given line is in use at either key box (line signal shall be "steady on"). No operator shall be able to ring on a line which another operator has in the talk mode. The three-position telephone switches shall control the following functions:

Off - locking

Talk - locking

Ring - non-locking

The Off position shall disconnect all circuits except ring sensing relay, associated holding circuits and call indication circuitry. The Talk position connects the operator's handset microphone and earpiece circuitry to the telephone line through a suitable impedance matching circuit, and completes a common battery path for the telephone line. The Talk position shall also accomplish the following:

a. Disconnect holding circuit, discontinuing the visual call and audible signal.

b. Provide busy indication for given line at each key box.

c. Lock out ringing circuit to prevent its use by another operator on the same line

Downloaded from http://www.everyspec.com



The Ring position shall disconnect the ring sensing circuitry from the line and connect the ringing generator to the line. Otherwise it shall accomplish the same function as the Off position.

3.11.8.2 Direct line operation (4.8.8.2). Initiation of an emergency Direct Line call from the tower shall be accomplished by switching from the MON (Monitor) position to the PTT (Push-to-talk) position. This shall cause circuitry to be actuated such that the local and/or ground controller may transmit to the assigned party on the opposite end by speaking into the microphone normally employed for radio communications. Receipt of voice communication in the emergency mode shall be accomplished by means of a speaker assembly centrally located in the tower. Initiation of a routine direct line call from the tower shall be accomplished by switching from the MON position to the HANDSET position. This shall allow the local and/or ground controller to communicate with the assigned party on the opposite end utilizing his handset. The HANDSET position of the switch shall disconnect the speaker assembly and connect the handset to the circuit. Each of three illuminated labels located adjacent to the associated direct line switch shall identify the calling party. The label shall normally be dimly illuminated for identification. Upon receipt of a call the label lamp associated with the calling party shall flash from dim to off. When the associated switch is placed in either the PTT or HANDSET position, the lamp shall be brightly illuminated. These lamp indications shall be present at both control boxes.

3.11.8.3 Cross-talk (4.8.8.3). The cross-talk isolation between telephone lines shall be at least 40 dB.

3.11.8.4 Telephone cradle. The telephone cradle shall be of such design and construction as to firmly secure the handset and permit one-hand removal during normal operation without undue force (as defined in MIL-STD-1472A, Paragraph 4.4(e)). The handset shall be stored in a storage drawer during transit.

Downloaded from http://www.everyspec.com



3.11.9 Capability to secure. The AN/TSW-7A shall include a capability to secure, using three KY-28s or KY-58s (with Adapter Z-AHQ), one radio in each frequency band (UHF-AM, VHF-AM and VHF-FM). The secured UHF-AM radio shall be located at the local controller's position, the secured VHF-FM radio at the data controller's position and the secured VHF-AM radio at the ground controller's position. The radios shall be selectively disconnected from the console audio and keying lines and reconnected to the KY-28 and C-8157, or to the KY-58, Z-AHQ and control head Z-AHP. One of the shelter drawers shall be large enough to contain the KYK-28 key gun used with the KY-28 or the KYK-13 key gun used with the KY-58 and shall be securable with a padlock. Voice communications shall be conducted by means of three secure headsets, each dedicated to one secured radio.

3.11.10 TEMPEST tests (4.8.10). The system shall comply with the TEMPEST requirements of AV-CP-5015-001A.

3.11.11 Wind measuring set (4.8.11). The wind measuring Set (AN/GMQ-11) shall display wind direction and speed. It shall be controlled through the power distribution box.

3.12 Radio facility requirements (4.9).

3.12.1 Transmit mode (4.9.1).

3.12.1.1 UHF-AM (4.9.1.1).

Downloaded from http://www.everyspec.com



3.12.1.1.1 Transmit power attenuation (4.9.1.1.1). The transmit power loss in the lines and filters between the antenna cable jacks normally connected to the AN/ARC-164 Radio Sets and their respective signal entry panel terminals shall be no more than 3.0 dB at 225.00 MHz and 2.9 dB at 399.95 MHz.

3.12.1.1.2 UHF-AM filter bypassed (4.9.1.1.2). With the UHF-AM filter bypassed, the transmit power loss shall be no more than 0.8 dB.

3.12.1.2 VHF-AM (4.9.1.2).

3.12.1.2.1 Transmit power attenuation (4.9.1.2.1). The transmit power loss in the lines and filters between the antenna cable jacks normally connected to the AN/ARC-115A Radio Set, and their respective signal entry panel terminals shall be no more than 3.7 dB at 116.00 MHz and 4.5 db at 149.975 MHz.

3.12.1.2.2 VHF-AM filter bypassed (4.9.1.2.2). With the VHF-AM filter bypassed, the transmit power loss shall be no more than 0.5 dB.

3.12.1.3 VHF-FM (4.9.1.3).

3.12.1.3.1 Transmit power attenuation (4.9.1.3.1) The transmit power loss in the lines and filters between the antenna cable jacks normally connected to the AN/ARC-114A Radio Sets and their respective signal entry panel terminals shall be no more than 2.7 dB at 30.00 MHz and 3.4 dB at 75.95 MHz.

3.12.1.3.2 VHF-FM filter bypassed (4.9.1.3.2). With VHF-FM filter bypassed, the transmit power loss shall be no more than 0.5 dB.

Downloaded from http://www.everyspec.com



3.12.1.4 HF/SSB (4.9.1.4). The transmit power loss between the output of the RT-698/ARC-102 and the HF Antenna coupler shall be no more than 3 dB.

3.12.2 Receive mode (4.9.2).

3.12.2.1 UHF-AM (4.9.2.1). The signal loss between the signal entry panel connector and the AN/ARC-164 antenna terminal shall be no more than 3.0 dB at 225.00 MHz and 2.9 dB at 399.95 MHz (with filter).

3.12.2.2 VHF-AM (4.9.2.2). The signal loss between the signal entry panel connector and the AN/ARC-115A antenna terminal shall be no more than 3.7 dB at 116.00 MHz and 4.5 dB at 149.975 MHz (with filter).

3.12.2.3 VHF-FM (4.9.2.3). The signal loss between the signal entry panel connector and the AN/ARC-114A antenna terminal shall be no more than 2.7 dB at 30.00 MHz and 3.4. dB at 75.95 MHz (with filter).

3.12.2.4 HF-SSB (4.9.2.4). The signal loss between the HF Coupler and the antenna terminal of the RT-698/ARC-102 shall be no more than 3 dB.

3.13 Service conditions (4.10).

3.13.1 Altitude (4.10.1). The assembly shall be operable without degradation in specified performance at altitude up to 10,000 feet above sea level and shall withstand air transportation at altitudes up to 50,000 feet above sea level. An automatic device shall cause pressure equalization in the shelter during ascent and descent at rates up to 10,000 feet per minute.

Downloaded from http://www.everyspec.com



3.13.2 High temperature (4.10.2).

a. Operating. - The assembly shall be operable without degradation in specified performance at ambient air temperatures as high as 110°F. The assembly shall be permitted a 30-minute stabilization period. The assembly ventilating system (not air conditioning) and the electronic equipment may be turned on as desired to benefit overall operational performance. At the end of the 30-minute period, the assembly shall provide full specified performance.

b. Storage and transportation. - The assembly shall withstand exposure to ambient air temperature as high as +160°F.

3.13.3 Low temperature (4.10.3).

a. Operating. - The assembly shall be operable without degradation in specified performance at an ambient air temperature as low as -25°F. The assembly shall be permitted a 30-minute warm-up period before full operation is required. During the 30-minute period, the assembly heating system(s) and the electronic equipment may be turned on as desired to benefit overall operational performance. At the end of the 30-minute period, the assembly shall provide full specified performance.

b. Storage and transportation. - The assembly shall withstand exposure to ambient air temperatures as low as -30°F.

3.13.4 Humidity (4.10.4). The assembly shall be operable without degradation in specified performance, and shall sustain no physical damage during and after prolonged exposure to extreme high humidity levels as encountered in tropical areas.

3.13.5 Rain (4.10.5). The assembly shall be operable without degradation in specified performance and shall sustain no physical damage during periods of heavy precipitation with intermittent winds as specified in Method 506, Procedure I of MIL-STD-810.

Downloaded from http://www.everyspec.com



3.13.6 Salt fog (4.10.6). The contractor furnished items when exposed to salt fog for 48 hours shall show no evidence of corrosion, flaking, pitting, blistering or otherwise loosened finish.

3.13.7 Fungus test (4.10.7). The contractor furnished items shall show no evidence of viable fungus or corrosion after being subjected to 28 days of fungus environment.

3.13.8 Water fording (4.10.8). The assembly shall show no evidence of leakage after being immersed in 21 inches of water for 2 hours.

3.13.9 Wind (4.10.9). The assembly shall be capable of operation in winds up to 70 knots (80 MPH) and shall withstand gusts up to 105 knots (120 MPH).

3.13.9.1 Antenna wind survivability. The antennas, when mounted on the shelter, shall be capable of withstanding winds steady to 70 knots with gusts to 105 knots.

3.13.10 Vibration and shock (4.10.10). The assembly shall withstand vibration and shock induced during vehicular transport over all types of roads and cross country terrain. Individual contractor-furnished electronic units shall be free of damaging resonances at frequencies below 55 Hz. The assembly shall also withstand shock and vibration associated with transport by rail, water, or air.

3.13.11 Electromagnetic interference/compatibility(EMI/EMC) (4.10.11).

Downloaded from http://www.everyspec.com



3.13.11.1 EMI emission and susceptibility. The complete system, including both CFE and GFE, shall meet the following emission and susceptibility requirements of MIL-STD-461A, Notice 4:

| | | | | | | |
|---|---|---|---|---|---|---|
| (a) | CE02 | CS02 | (e&j) | RE02 | (g&j) | RS03.1 |
| (b) | CE03 | CS06 | (e&j) | RE02.1 | | |
| (c,h) | CE04 | | (f) | RE03 | | |
| (b,c,i) | CE05 | | | | | |
| (d) | CE06 | | | | | |

(a) CE02 limit shall be relaxed 10dB over the 10KHz-50KHZ frequency range.

(b) Requirements CE03 and CE05 are applicable only to control and signal leads which interface with equipment other than the AN/TSW-7A.

(c) Narrowband Limit shall not apply to transmitter fundamental frequencies.

(d) Requirement CE06 is applicable only for the "key-up" mode. CE06 Broadband Limit shall be relaxed 40dB over the 10KHz-75KHz frequency range.

(e) The HF radio shall not be operated. Emissions which are above specification limits and which are attributed to the GFE air conditioner will not be cause for rejection of the subsystem. The RE02 broadband limit shall be as indicated in Figure 1 except they shall be relaxed 20dB over the 14KHz-50KHZ frequency range and 10dB over the 8MHz-11MHz frequency range for steady state emissions. In addition limits shall be relaxed 50dB over the 14KHz-400MHz frequency range for transient interference produced by manually operated switches. Furthermore, during testing, preselected frequencies shall be selected as test frequencies in accordance with MIL-STD-462 Notice 2 Paragraph 4.2.7.(a).

(f) Spurious and harmonic outputs of the transmitters shall be attenuated (except HF) to minimize interference between radio channels. One each transmitter shall be keyed on the frequencies listed below while scanning and monitoring one each of the remaining receivers for malfunction or degraded performance. Degradation of performance shall be any change in

Downloaded from http://www.everyspec.com



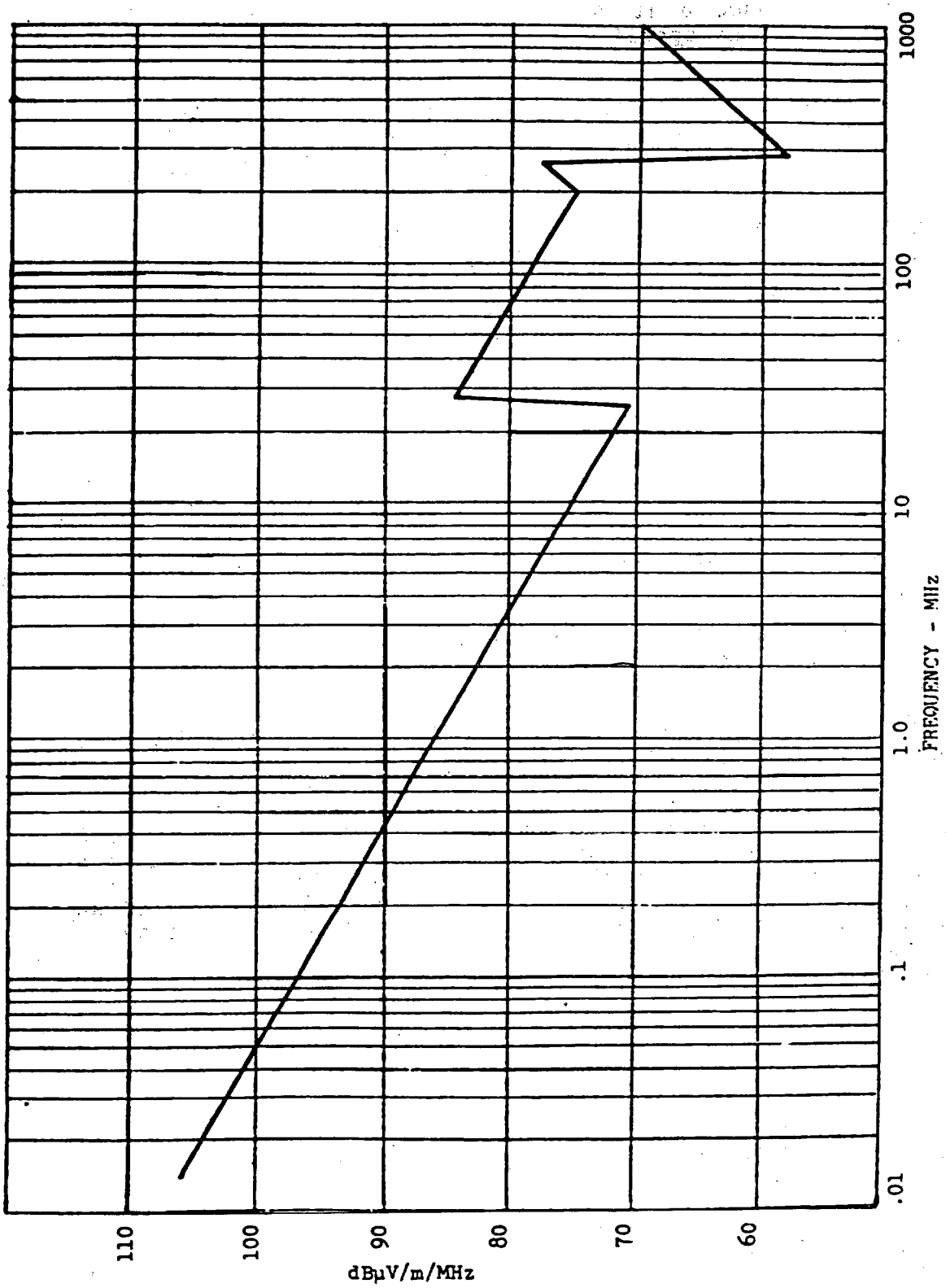


FIGURE 1. RE02 Broadband radiated emission

Downloaded from http://www.everyspec.com



receiver noise level after the receiver controls have been adjusted to produce a 10 dB (S+N)/N ratio as specified in the individual equipment specification.

| AN/ARC-102 | AN/ARC-114A | AN/ARC-115A | AN/ARC-164 |
|---|---|---|---|
| 4 MHz | 32.05 MHz | 116.125 MHz | 227.15 MHz |
| 16 MHz | 51.50 MHz | 132.5675 MHz | 312.40 MHz |
| 28 MHz | 72.80 MHz | 148.300 MHz | 395.75 MHz |

The receiver tuned frequency at $f_o$ of the transmitter and in the specified radio combination noted below, haromonics of $f_o$, are exempt.

| XMTR | RCVR |
|---|---|
| HF | FM<br>VHF |
| FM | VHF<br>UHF |
| VHF | UHF |

(g) Field strength levels for design requirements RS03,1 shall be as follows:

| | |
|---|---|
| 2 to 29.99 MHz | 5 volt/meter |
| 30 to 1999 MHz | 10 volt/meter |
| 2 to 12.4 GHz | 5 volt/meter |

Two sides of the subsystem shall be immersed in the specified fields.

(h) CE04 Broadband Limit shall be relaxed 30dB over the 50KHz-50MHz frequency range for transient interference produced by manually operated switches. Furthermore, the CE04 Broadband Limit shall be taken from Figure 5 of the MIL-STD-461A, Notice 4 and during testing, preselected frequencies shall be selected as test frequencies in accordance with MIL-STD-462, Notice 2 Paragraph 4.2.7(a).

Downloaded from http://www.everyspec.com



(i) CE05 Broadband Limit shall be relaxed 20dB @8 MHz for transient interference produced by manually operated switches. The CE05 Broadband Limit shall be taken from Figure 5 of MIL-STD-462A, Notice 4 and during testing, preselected frequencies shall be selected as test frequencies in accordance with MIL-STD-462, Notice 2, Paragraph 4.2.7.(a).

3.13.11.2 Transmitter intermodulation. The third order (3rd) intermodulation product shall be at least 46 dB below the interfering carrier level when measured in accordance with 4.10.11.2.

3.13.11.3 Desensitization. There shall be no degradation beyond a 10 dB (S+N)/N of any receiver when one or more are keyed and frequency separations of 4 MHz for VHF and 7 MHz for UHF are maintained between receiver and transmitter. Measurements shall be performed in accordance with 4.10.11.3 or as depicted in the electromagnetic interference test plan.

3.13.11.4 Bonding and grounding. All contractor furnished equipment (CFE) shall have adequate provisions for bonding the equipment to the shelter. Bonding of both CFE and GFE shall not be accomplished through screws connecting the units to mounting racks. Shock mounted equipment or those employing vibration isolators shall utilize bonding straps to bypass the mount and achieve a low impedance bond, 2.5 milliohms or less, between the units and subsystem ground plane. Bonding jumpers shall be of the solid metal type and be as short as possible. However, in no case shall the length to width employed shall not impede maintainability nor adversely affect interchangeability. Surfaces being bonded together shall be prepared by removing all anodic film, grease, paint, lacquer, dirt or other foreign and

Downloaded from http://www.everyspec.com



high resistance materials or agents from the immediate area to insure negligible radio frequency (RF) impedance between the adjacent metal parts. Upon completion of the bonding assembly and ascertainment of the specified 2.5 milliohm bonding impedence, the completed assembly shall be refinished with its original finish or other protective finish in accordance with MIL-F-14072B.

3.13.11.5 Cables and connectors. Shielded cables, when required, shall only be employed between functional components and equipments, both CFE and GFE, supplied under this specification, and the shield weave shall provide no less than ninety percent (90%) coverage. Shielded cables shall not be utilized between interfaces of this subsystem and other co-sited systems. Connectors which support cables which interface with other co-sited subsystems and systems shall use pin filters or equivalent to minimize or alleviate any undesirable emissions on the interface lines. All shielded cables shall have the shield terminated in an approved military connector with an EMI backshell to provide peripheral bonding of the shield. All connectors shall be free of non-conductive finishes and provide positive bonding and grounding with mating connectors and subsystem ground. The DC bonding resistance for all connectors and panel mounted components shall not exceed 2.5 milliohms. Each AN/TSW-7A shall be provided with one 3-phase, 208 volt power input cable to connect one power generator to the shelter power entrance panel. Each AN/TSW-7A shall also be provided with two cable stubs, for connecting the power input cable to the generators. The cable assemblies and stubs shall be in accordance with ECM drawings ES-D-212335 and ES-D-212336, respectively, with the exceptions that (1) the cables will be doubled shielded as provided for the development models to meet EMI and EMP requirements and (2) connectors adapters shall be provided for bonding the shielding to the connectors. The cable shall be 100 feet long and have a 60 ampere rating. The stubs shall be 15 feet long and have a 60 ampere rating. The cables and stubs shall have four conductors plus ground conductors which are independent of the shielding and conform to the requirements of the National Electric Code. The cable assembly shall be mounted on a cable reel and secured to the equipment pallet for storage and transportation. The shelter power input panel shall contain an input connector which mates with the cable assembly connector.

Downloaded from http://www.everyspec.com



3.13.11.5.1 Wiring. Flexible double-shielded wiring shall be used within the shelter for RF cables.

3.13.11.5.2 Mechanical support. Mechanical support shall be provided for the terminations of RF cables that exceed three feet in length.

3.14 Government furnished property list. Government furnished equipment shall include the following:

GFE (Part of)

a. Radio Set AN/ARC-114A (3 each)

b. Radio Set AN/ARC-115A (3 each)

c. Radio Set AN/ARC-164 (3 each)

d. Radio Set AN/ARC-102 (1 each)

e. Antenna Coupler CU-1658/A (1 each)

f. Environmental Control Unit CE20VAL6-208 (2 each)

g. Wind Measuring Set, AN/GMQ-11 (1 each, plus additional indicator ID-373( )/GMQ-11).

h. Mountings MT-3802 (3 each) and MT-3772A (1 each)

i. Binoculars Model M-17A1 (2 each)

j. Gasoline Engine Generator Set MEP-025A (1 each)

k. VHF/FM Antenna AS-1729/VRC (3 each)

l. Battery Charger PP-1659/G (1 each)

m. Control C-8157/ARC (3 each)

n. Heater, space, multifuel (1 each)

Downloaded from http://www.everyspec.com



Separately issued items (Used with)

a. Power Unit PU-405 (2 each)

b. TSEC/KY-28 (3 each) or TSEC/KY-58 (3 each)

3.15 Burn-in (see 4.5.4). The equipment in each shelter shall be turned on and burned in for fifty two (52) hours prior to Acceptance Tests (Group A) and prior to Group A, B and C tests as applicable.

3.16 Systems safety engineering (4.11.1).

3.16.1 Personnel hazards. Personnel hazards shall be kept to a minimum through compliance of configuration changes and parts selection with Requirement 1 of MIL-STD-454. Compliance with these requirements will be verified through a visual inspection.

3.16.2 Edge rounding exposed. Exposed edges shall be rounded to a minimum radius of 0.04 inch (1 mm), and exposed corners to a minimum of 0.05 inch.

3.16.3 Radioactive materials. Radioactive materials shall not be used (e.g., luminous dials/markings, electron tubes, surge arrestors and lenses).

Downloaded from http://www.everyspec.com



3.16.4 High voltage warning. Warning labels shall be provided inside and outside the power distribution box in compliance with requirement 1, Safety, of MIL-STD-454.

3.17 Use of test equipments. The use of test equipment to assure the quality of the unit under test shall be specified herein or their equivalent. Any equivalent or substitute test equipments must be submitted to the government for approval prior to use.

3.18 Workmanship. The equipment shall be manufactured and assembled in accordance with requirement 9 of MIL-STD-454, and the applicable portions of the following paragraphs of MIL-P-11268 (see 4.12).

General requirements for plastic material and plastic parts.

Wiring and cabling, including:

Slack
Protection
Clearance
Splicing
Connections, general
Grounding, general
Shielding on wire and cable
Soldering and brazing
Cleaning of units
General requirements for securing of parts
Cleaning prior to welding
Process for weldng
Cleaning after welding
Controls
Self tapping screw

Downloaded from http://www.everyspec.com



## 4. QUALITY ASSURANCE

4.1 Responsibility for inspection. Unless otherwise specified in the contract the supplier is responsible for the performancee of all inspection requirements as specified herein. Except as otherwise specified, the supplier may utilize his own facilities or any commercial laboratory acceptable to the Government. The Government reserves the right to perform any of the inspections set forth in the specification where such inspections are deemed necessary to assure that supplies and services conform to prescribed requirements.

4.2 Quality assurance program. It is required, that in addition to the inspection requirements specified herein, the contractor shall establish and maintain a quality program in accordance with all the requirements of Government Specification MIL-Q-9858A.

4.3 Classification of inspections. Inspections shall be classified as follows:

a. First Article Inspection. (See 4.4 and 4.13)

b. Inspections covered by subsidiary documents. (See 4.5)

c. Quality conformance inspections.

(1) Quality conformance inspection of equipment before packaging. (See 4.6)

(2) Packaging inspection. (See 4.13)

4.4 First article. Unless otherwise specified in the contract the First Article inspection shall be performed by the contractor.

4.4.1 First article units. The contractor shall furnish that number of First Article units of the complete Air Traffic Control Central AN/TSW-7A as specified in the contract.

Downloaded from http://www.everyspec.com



4.4.2 First article inspection. This inspection shall consist of the inspections specified in subsidiary documents covering the items listed in 4.5 and the inspections specified for Group A and Group C and burn-in as specified in 4.6.4 (See Tables I and II). The order of tests shall be Group A tests followed by Group C tests as in Table III. Burn-in shall be performed prior to Group A inspection.

4.5 Inspection covered by subsidiary documents. The following shall be inspected under the applicable subsidiary documents as part of the inspection of equipment before packaging:

| ITEM | WHERE REQUIRED |
|---|---|
| Finish | 3.5 |
| Marking | 3.6 |
| Printed Wiring Assemblies | 3.8 |
| Conformal Coating | 3.9 |
| Parts, Materials and Processes | 3.2 |
| Microelectronic devices | 3.2.1 |
| Discrete semiconductor devices | 3.2.2 |
| Passive and other electrical/ electronic and electromechanical parts | 3.2.3 |
| Cable Assemblies | 3.4 |

4.6 Quality conformance inspection of equipment before packaging. The contractor shall perform the inspection specified in 4.5, 4.6.1 through 4.6.2, and 4.6.4. Burn-in shall be performed prior to Group A inspection. This does not relieve the contractor of the responsibility for performing any additional inspection which is necessary to control the quality of the product and to assure compliance with all specification requirements. The Government will review and evaluate the contractor's inspection procedures and examine the contractor's inspection records. In addition, the Government at its discretion may perform all or any part of the specified inspection, to verify the contractor's compliance with specified requirements (See 6.3). Test equipment for Government verification inspection shall be made available by the contractor.

4.6.1 Group A inspection. Each unit shall be inspected for conformance to all the inspection and test requirements of Table I. Group A inspection shall be conducted in accordance with the tests in AV-CP-5012-001A. Prior to Group A inspection, the burn-in of 4.6.4 shall be performed.

Downloaded from http://www.everyspec.com



TABLE I Group A inspection

| Inspection | Req't para | Insp para | AV-CP-5012-001A |
|---|---|---|---|
| Interchangeability | 3.7 | 4.11 | |
| Mechanical & visual | 3.16 | 4.12 | 2.6 |
| **Electrical** | | | |
| Primary power | 3.10.1 | 4.7.1 | |
| Emergency power | 3.10.2 | 4.7.2 | |
| DC power | 3.10.3 | 4.7.3 | 2.8.2 |
| DC power supply | 3.10.4 | 4.7.4 | 2.8.2.1 |
| Radio facility tests | 3.12 | 4.9 | 2.8.4 |
| **Systems operation** | | | |
| Local, data & ground | 3.11.1 | 4.8.1 | |
| Supervisor | 3.11.2 | 4.8.2 | |
| Speaker/amplifier | 3.11.4 | 4.8.4 | |
| Speaker/amplifier lights | 3.11.5 | 4.8.5 | |
| Headset | 3.11.6 | 4.8.6 | |
| NAVAIDS Remote monitor | 3.11.7 | 4.8.7 | 2.10.1 |
| Telephone group | 3.11.8 | 4.8.8 | 2.10.2 |
| Secure voice operation | 3.11.9 | 4.8.9 | 2.9.3 |
| Wind measurement | 3.11.11 | 4.8.11 | 2.10.3 |
| **Radio operational tests** | 3.11.3 | 4.8.3 | 2.9 |

Downloaded from http://www.everyspec.com



4.6.2 Group B inspection. This inspection, including sampling, shall conform to TABLE II and to special procedures for small-sample inspection of MIL-STD-105. Group B inspection shall be performed on centrals that have passed Group A inspection. For this inspection, the first central from every option lot on order shall be inspected. If a deficiency is found during Group B testing, testing for that deficient parameter shall be done on two (2) Centrals, assembled immediately subsequent to the deficient Central. If no deficiencies are noted in the two additional Centrals, repair of the deficient Central should be made and a record of corrective action taken should be maintained and kept on file. If the deficiencies are also noted in the additional units tested, notification should be made to the procurement activity of actions necessary to correct the problem. Testing shall be performed in the order shown in Table II. Group B testing shall be performed in accordance with tests in AV-CP-5013-001A.

TABLE II Group B Inspection

| | Req't para | Insp para | AV-CP-5013-001A |
|---|---|---|---|
| High temperature | 3.13.2 | 4.10.2 | 1.5.1 |
| Low temperature | 3.13.3 | 4.10.3 | 1.5.2 |
| TEMPEST | 3.11.10 | 4.8.10 | |
| Vibration (Munson Rd) | 3.13.10 | 4.10.10b | 1.5.4 |
| Shock, drop | 3.13.10 | 4.10.10.2 | 1.5.5.1 |
| Vibration (Subassembly) | 3.13.10 | 4.10.10a | 1.5.6 |

Downloaded from http://www.everyspec.com



4.6.3 Group C inspection. Group C inspections shall be performed in accordance with the tests of AV-CP-5013-001A. This inspection shall include the inspections listed in Table III performed in the order shown in Table III, except for asterixed items, on one sample unit that has been subjected to and met Group A inspection. No defects shall be allowed. Sample unit shall be selected in accordance with 4.5.2.1. Tests to be conducted before, during or after Group C tests shall be as listed in Table IV.

TABLE III Group C inspection

| | Req't para | Insp para | AV-CP-5013-001A |
|---|---|---|---|
| Assembly/Disassembly test | 3.1.32 | 4.10.12 | |
| Temperature high | 3.13.2 | 4.10.2 | 1.6.1 |
| Temperature low | 3.13.3 | 4.10.3 | 1.6.2 |
| Humidity | 3.13.4 | 4.10.4 | 1.6.3 |
| Rain | 3.13.5 | 4.10.5 | 1.6.4 |
| Vibration and shock | 3.13.10 | 4.10.10 | 1.6.5 |
| Shock, drop | 3.13.10 | 4.10.10.2 | 1.6.6 |
| Shock, rail humping | 3.13.10 | 4.10.10.1 | 1.6.7 |
| Forklift of shelter & pallet | 3.1.33 | 4.10.13 | 1.6.8 |
| Water fording | 3.13.8 | 4.10.8 | 1.6.9 |
| Tempest testing | 3.11.10 | 4.8.10 | |
| Electromagnetic compatibility | 3.13.11 | 4.10.11 | 1.6.11 |
| *Shock, bench handling | 3.13.10 | 4.10.10.3 | 1.6.13 |
| *Wind | 3.13.9 | 4.10.9 | 1.6.17 |
| *Salt fog | 3.13.6 | 4.10.6 | 1.6.14 |
| *Fungus | 3.13.7 | 4.10.7 | 1.6.15 |
| *Altitude | 3.13.1 | 4.10.1 | 1.6.16 |

Downloaded from http://www.everyspec.com



TABLE IV Performance tests for Group C inspection

| | Alt | | High Temp | | | Low Temp | | | Wind | Rain | Water Ford. | Salt Fog | Humid | | Fungus | Vib. | Rail Hump | Shock, drop | Bench Handling |
|---|---|---|---|---|---|---|---|---|---|---|---|---|---|---|---|---|---|---|---|
| TESTS | Before | After | Before | During | After | Before | During | After | After | After | After | After | Before | After | After | After | After | After | After |
| Radio Facilities 3.12/4.9 | X | X | X | X | X | X | X | X | | | | | | | | | | | |
| Structural Damage | | | | | | | | | X | | | | | | | X | X | X | X |
| Penetration of Water | | | | | | | | | | X | X | | | | | | | | |
| Fungus Growth | | | | | | | | | | | | | | | X | | | | |
| Flaking, Pitting, Blistering and Binding | | | | | | | | | | | | X | X | X | | | | | |

Downloaded from http://www.everyspec.com



4.6.3.1 Sampling for inspection. The first production unit shall be selected for Group C inspection.

4.6.3.2 Non-compliance. Actions required relative to Group C failure shall be as specified in the contract or purchase order.

4.6.3.3 Reinspection of conforming group C sample units. Unless otherwise specified, sample units which have been subjected to and passed Group C inspection may be accepted on the contract or order provided all damage is repaired and the sample units are resubjected to and pass Group A inspection.

4.6.4 Burn-in (3.15). Each shelter assembly produced shall be subjected to a 52-hour burn-in period at 20°C ± 5°C. During this period the equipment will be on for 22 hours (including approximately 2 hours test time), - off 3 hours, - on 22 hours (including 2 hours test time)- off 3 hours - on for test (2 hours). A failure is defined as any event which causes departure from performance as required by this specification. Each failure shall be recorded and analyzed.

4.7 Power (3.10).

4.7.1 Primary power. With the system at near full load condition, i.e., all transceivers turned on, light guns and landlines operated at a 10% duty cycle, vary the power source as shown below:

| Voltage (V) | Frequencies (Hz) | Remarks |
|---|---|---|
| 120 | 60,50,63,47.5 | ECU's on |
| 108 | 60,50 | ECU's on |
| 126 | 60,50 | ECU's on |
| 132 | 60,50 | (No ECU's - Voltage high) |

The output voltages from the DC Power supplies shall be measured to determine compliance with 3.10.1.

Downloaded from http://www.everyspec.com



4.7.2 Emergency power (3.10.2).

4.7.2.1 Emergency operation. With the battery at full charge, disconnect the primary power. Operate the equipment to determine compliance with 3.10.2.1.

4.7.2.2 Battery charging system. With the primary power disconnected, start the Auxiliary Power Unit (APU) to operate the battery charger. Measure the output of the battery charger to determine compliance with 3.10.2.2.

4.7.2.3 Truck battery power. With all shelter power disconnected, connect shelter to truck battery with provided cable. Turn on truck engine and operate emergency radios.

4.7.3 DC power and associated transfer equipment. With a minimum load of one radio (AN/ARC-114A, -115A or -164 on in receive mode) turn off the operational supply and verify automatic transfer to the standby supply and the alarm sounds. Repeat, with the standby supply as the operational supply. Turn both supplies off verifying automatic transfer to emergency battery power to determine compliance with 3.10.3.

4.7.4 DC power supply. Apply a load across the output which will draw 50 amperes when the output voltage is set to 27.5 VDC. Measure the output voltage and current to determine compliance with 3.10.4.

4.8 System operation (3.11).

4.8.1 Local, data and ground controller position communication selection. Operate each of the ten transceivers in all three controller positions to determine compliance with 3.11.1.

Downloaded from http://www.everyspec.com



4.8.2 Supervisor facility. Verify that the supervisor can monitor and pre-empt transmissions from all three consoles to determine compliance with 3.11.2.

4.8.3 Radio operational tests. Measure the forward output power of each transceiver with the tunable bandpass filters tuned to the corresponding transceiver frequency. To check the sensitivity of the transceivers, apply the following open-circuit voltage inputs through a 6 dB pad and verify that a 1000-Hz tone is heard in the corresponding speaker and that the signal has a 10 dB minimum (S+N)/N ratio.

| | Input (Radio Connector) | Input (Signal Entry Panel) |
|---|---|---|
| UHF/AM | 3.4 µv | 10.2 µv |
| VHF/AM | 2.6 µv | 8.0 µv |
| VHF/FM | 0.6 µv | 1.8 µv |
| HF/SSB | 0.5 µv | 0.7 µv |

Perform the above tests to determine compliance with 3.11.3.

4.8.4 Speaker/amplifier assembly. Apply an audio input of 50 milliwatt maximum at 1000 Hz to each amplifier assembly. Measure the audio output and harmonic distortion to determine compliance with 3.11.4. Repeat these measurements at 200 and 5000 Hz.

4.8.5 Speaker/amplifier indicator lights. Apply an audio input of 50 milliwatts at 1000 Hz to each amplifier assembly. Observe light to determine compliance with 3.11.5.

4.8.6 Headset mixing circuit. Adjust the audio level with the VHF-1 selector in the headset position for compliance with 3.11.6.

4.8.7 NAVAIDS remote monitor.(3.11.7). Short the NAVAID MON input terminals on the Landline Entry Panel. Verify that the Operate lamp lights; the FAILURE lamp goes off. (Note: The alarm may sound during initial turn on; reset it). Remove the input short and verify that the FAILURE lamp lights and the alarm sounds. Reset the alarm and verify it is silenced, to determine

Downloaded from http://www.everyspec.com



compliance with 3.11.7.1. Measure the resistance across the Bail Out Alarm terminals to determine compliance with 3.11.7.2.

4.8.8 Telephone group (3.11.8).

4.8.8.1 Landline operation. Establish ring-out, ring-in and talk communications with each landline in both the common battery and local battery modes to determine compliance with 3.11.8.1.

4.8.8.2 Direct line operation. Establish call out and call in communications with each of the direct lines to determine compliance with 3.11.8.2.

4.8.8.3 Cross-talk. Measure the cross-talk on each of the landlines and direct lines with a 1000-Hz, 0-dBm signal applied to an adjacent line to determine compliance with 3.11.8.3. (Note: Assure that measured lines are properly terminated).

4.8.9 Secure voice operation. Set the PLAIN/CIPHER switch to PLAIN. Depress RCVR TEST on FM-3 and verify that the tone is audible from the FM-3 speaker but not in the secure headset. Set the CLEAR/SECURE switch to SECURE, depress the RCVR TEST and verify that the tone is audible in the secure headset but not from the speaker. If a TSEC/KY-28 is available check the cipher mode to determine compliance with 3.11.9.

4.8.10 TEMPEST tests. TEMPEST tests shall be performed in accordance with AV-CP-5015-001A and the contractor prepared, Government approved TEMPEST Test Plan.

Downloaded from http://www.everyspec.com



4.8.11 Wind measuring set. Turn the windset transmitter until the propeller is facing North and verify the wind direction indicators indicate North. Repeat for East, South and West. Spin the propeller in a CCW direction (facing the propeller) and verify that the windspeed indicator read up-scale to determine compliance with 3.11.11.

4.9 Radio facility tests (3.12).

4.9.1 Transmit mode (3.12.1).

4.9.1.1 UHF-AM.

4.9.1.1.1 Transmit power attenuation. Connect an RF source, set at 10 watts minimum oputput, unmodulated, to the antenna cable normally connected to the AN/ARC-164 on the UHF-1 channel. The output at UHF-1 terminal of the signal entry panel shall be measured to determine compliance with 3.12.1.1.1. This test shall be performed at 225.00 MHz, 312.50 MHz and 399.95 MHz. The test shall be repeated on channels UHF-2 and UHF-3.

4.9.1.1.2 UHF-AM filter bypassed. Using the UHF-3 channel, the transmit power attenuation shall be tested with the UHF filter bypassed to determine compliance with 3.12.1.1.3.

4.9.1.2 VHF-AM.

4.9.1.2.1 Transmit power attenuation. Connect an RF source, set a 10 watts minimum output, unmodulated, to the antenna cable normally connected to the AN/ARC-115A on the VHF-1 channel. The output at the VHF-1 terminal of the signal entry panel shall be measured to determine compliance with 3.12.1.2.1. This test shall be performed at 116.000 MHz, 133.000 MHz and 149.975 MHz. The test shall be repeated for the B transceiver position on channels VHF-2 and VHF-3.

Downloaded from http://www.everyspec.com



4.9.1.2.2 VHF-AM filter bypassed. Using the VHF-3 channel, the transmit power attenuation shall be tested with VHF filter bypassed to determine compliance with 3.12.1.2.3.

4.9.1.3 VHF-FM.

4.9.1.3.1 Transmit power attenuation. Connect an RF source, set at 10 watts minimum output, unmodulated, to the antenna cable normally connected to the AN/ARC-114A on the FM-1 channel. The output at the FM-1 terminal of the signal entry panel shall be measured to show compliance with 3.12.1.3.1. This test shall be performed at 30.00 MHz, 53.00 MHz and 75.95 MHz. The test shall be repeated on channel FM-2 and FM-3.

4.9.1.3.2 VHF-FM filter bypassed. Using the FM-3 channel the transmit power attenuation shall be measured with the filter bypassed to show compliance with 3.12.1.3.3.

4.9.1.4 HF/SSB. With 100 watts minimum RF power applied to the cable normally attached to the antenna jack of the RT-698/ARC-102, measure the power output at the 50 ohm output connector of the HF coupler case to show compliance with 3.12.1.4. This test shall be performed at 2.000 MHz, 16.500 MHz and 29.995 MHz.

4.9.2 Receive mode (3.12.2).

4.9.2.1 UHF-AM signal loss. Connect an RF source, set at 1000 microvolts, unmodulated, to the UHF-1 terminal of the signal entry panel. The output measured at the antenna cable normally connected to the AN/ARC-164, shall be measured to show compliance with 3.12.2.1. This test shall be performed at 225.00 MHz, 312.50 MHz and 399.95 MHz. This test shall be repeated on channels UHF-2 and UHF-3.

Downloaded from http://www.everyspec.com



4.9.2.2 VHF-AM signal loss. Connect an RF source set at 1000 microvolts, unmodulated, to the VHF-1 terminal of the signal entry panel. The output measured at the antenna cable normally connected to the AN/ARC-115A shall be measured to show compliance with 3.12.2.2. This test shall be performed at 116.000 MHz, 133.000 MHz and 149.975 MHz. The test shall be repeated on channels VHF-2 and VHF-3.

4.9.2.3 VHF-FM signal loss. Connect and RF source set at 1000 microvolts, unmodulated, to the FM-1 terminal of the signal entry panel. The output measured at the antenna cable normally connected to the AN/ARC-114A shall be measured to show compliance with 3.12.2.3. This test will be performed at 30.00 MHz, 53.00 MHz and 79.95 MHz. This test shall be repeated on channels FM-2 and FM-3.

4.9.2.4 HF/SSB signal loss. Connect and RF source set at 1000 microvolts, unmodulated, to the cable connector normally connected to the HF Coupler Case. Measure the output at the connector normally connected to the antenna connector of the RT-698/ARC-102 to show compliance with 3.12.3.4. This test shall be performed at 2.000 MHz, 16.500 MHz and 29.995 MHz.

4.10 Service conditions (3.13). Unless otherwise specified the Service Condition tests shall be connected in accordance with MIL-STD-810. Electrical tests and inspections shall be conducted as specified in Table IV. No defects shall be allowed.

4.10.1 Altitude. The automatic device used to cause pressure equalization in the shelter shall be certified by the contractor as being suitable for the shelter to meet the test of Method 500, Procedure I, of MIL-STD-810. The rate of altitude change ascending and descending shall be 10,000 feet per minute to determine compliance with 3.13.1.

Downloaded from http://www.everyspec.com



4.10.2 High temperature (3.12.2). The assembly shall be subjectd to the test of Method 501. Procedure II of MIL-STD-810. For step 4, the chamber temperature shall be 160°F. Steps 7 and 8 shall be performed as follows:

a. Raise chamber temperature to 160°F and maintain until temperature stabilization of the assembly.

b. Within a time period of 10 minutes, lower the chamber temperature to 110°F. When the equipment temperature has stabilized, initiate operation of the assembly. After initiation of operation, the Environmental Control Unit may be operated but only in the "Ventilate" mode.

4.10.3 Low temperature (3.13.3). The assembly shall be subjected to the test of Method 502, Procedure I of MIL-STD-810. The storage temperature (Step 2) shall be -30°F and shall be maintained for a period of not less than 2 hours following stabilization of the test item. Low operating temperature (Step 4) shall be -25°F. In step 5, the assembly shall be turned "on" including electronic equipment and assembly accessories, except heating system, as required for normal operation and shall comply with full operational performance requirement within a time period of 30 minutes.

4.10.4 Humidity (3.13.4). The assembly shall be subjected to the test of Method 507, Procedure II, of MIL-STD-810. During Steps 3 and 7, the shelter door and vents shall be open. Prior to measurements excess surface water may be removed from the equipment by wiping external surfaces only.

4.10.5 Rain (3.13.5). The assembly shall be subjected to the test of Method 506, Procedure I, of MIL-STD-810. During each 30 minute rain period, the wind shall be maintained for 15 minutes, commencing 5 minutes after the start of the period as specified in the procedure.

Downloaded from http://www.everyspec.com



4.10.6 Salt fog (3.13.6). Samples of contractor furnished equipment shall be subjected to the test of Method 509, Procedure I of MIL-STD-810. The selection of samples shall be reviewed and approved by the procuring activity prior to commencement of the test. Equipments having moving mechanical part with exposed bearing surfaces, shall be subjected to mechanical operation following salt fog testing to insure that no clogging or binding has resulted. No other operational tests are required.

4.10.7 Fungus (3.13.7). Individual contractor-furnished electronic equipments of the assembly shall be tested as required to demonstrate resistance to fungus growth. Such items shall be subjected to the test of Method 508, Procedure I, of MIL-STD-810. Gasket sealed or other nonhermetic sealed test items shall be opened during test exposure and all internal surfaces shall be sprayed with spore suspension as well as examination at the conclusion of the exposure period shall reveal no evidence of fungus on any surfaces. Selection of samples shall be approved by the procuring activity prior to testing.

4.10.8 Water fording. The assembly shall be immersed at a depth of 21 inches for a period of 2 hours with no evidence of leakage to determine compliance with 3.13.8.

4.10.9 Wind. The capability of the system to withstand the wind load requirements paragraph 3.13.9 shall be demonstrated by analysis.

4.10.10 Vibration and shock (3.13.10). The assembly shall be tested as follows:

a. Individual contractor-furnished electronic equipments of the assembly shall be subjected to the test of Method 514.1, Procedure IX, of MIL-STD-810.

b. The complete assembly shall be subjected to the test of Method 514.1 Procedure XIII, Part 2, of MIL-STD-810. Prior to the test, the transport vehicle tire pressures shall be adjusted for tactical (off-road) cross country service. At the conclusion of the test the assembly shall meet specified performance requirements and sustain no physical damage.

Downloaded from http://www.everyspec.com



4.10.10.1 Shock, rail humping. The assembly shall be subjected to the rail humping (impact) test contained in the specification for the basis shelter (MIL-S-55286) used in the assembly construction.

4.10.10.2 Shock, drop. The assembly shall be subjected to the flat and rotation drop tests of MIL-S-55286. There shall be no physical damage.

4.10.10.3 Shock, bench handling. Individual contractor-furnished electronic equipments shall be subjected to the test of Method 516.1, Procedure V, of MIL-STD-810.

4.10.11 EMI/EMC tests (3.13.11).

4.10.11.1 EMI emission and susceptibility. The complete AN/TSW-7A shall be tested for compliance with the EMI/EMC requirements of 3.3.11 and all of its subparagraphs. The test procedures shall be in accordance with the test methods given in MIL-STD-462, Notice 3, as implemented by a contractor prepared, government approved, EMI/EMC test plan. Prior to the start of any EMI/EMC test, compliance with the bonding requirements of 3.13.11.4 and 3.12.11.5. shall be ascertained; the bonding data shall be included in the EMI/EMC test report. Tests for CE06 shall be performed at the end of the coaxial cable connecting the R/T units to the antenna. Tests for RE02 and RE02.1 shall be performed with the air conditioner and heater on and cycling, and the shelter door closed. The test distance shall be 3 meters from each face of the shelter.

4.10.11.2 Transmitter intermodulation. When connected as shown in Figure 2, the transmitter 3rd order intermodulation product shall be measured for compliance with 3.13.11.2.

4.10.11.3 Desensitization. Radiate an RF signal with appropriate modulation for each receiver to establish a 10 dB (S+N)/N ratio. Key one transmitter simultaneously with voice modulation. Each transmitter shall be within 4 MHz of the receiver tuned frequency for VHF and within 7 MHz of the receiver tuned frequency for UHF. For compliance with 3.13.11.3, there shall be no change in the (S+N)/N ratio.

Downloaded from http://www.everyspec.com



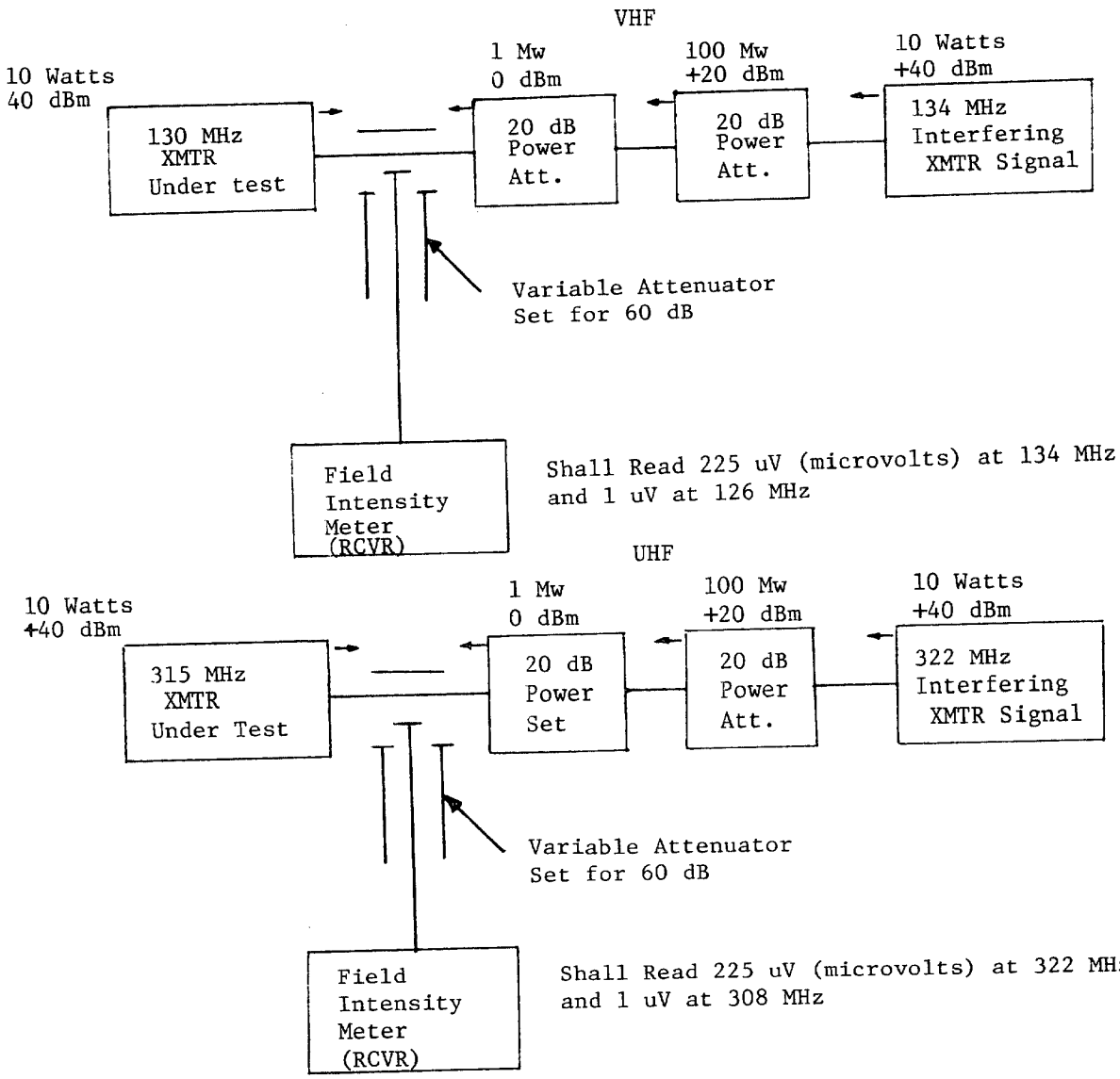


| | XMTR Under Test Freq. | Interfering Signal Freq. | RCVR Tuned Freq. |
|---|---|---|---|
| ARC-114A | 36 MHz | 40 MHz | 32 MHz |
| | 56 MHz | 60 MHz | 52 MHz |
| | 71 MHz | 75 MHz | 67 MHz |
| ARC-115A | 122 MHz | 126 MHz | 118 MHz |
| | 130 MHz | 134 MHz | 126 MHz |
| | 144 MHz | 148 MHz | 140 MHz |
| ARC-164 | 235 MHz | 242 MHz | 228 MHz |
| | 315 MHz | 322 MHz | 308 MHz |
| | 388 MHz | 395 MHz | 381 MHz |

FIGURE 2. Transmitter Intermodulation

Downloaded from http://www.everyspec.com



4.10.12 Assembly and disassembly. The contractor shall assemble and disassemble the system into emergency, limited and full operating configurations within the times specified as follows:

a. Using six (6) trained personnel, the system shall be capable of: emergency operation in twenty minutes, limited operation within thirty minutes and full operation within one hour of arrival on site.

(1) Emergency operation is defined as one UHF, one VHF/AM and one VHF/FM channel tuned and available for communication, shelter and skid platform on the two 2 ½ ton trucks used for transit, window screens removed, roof access steps in place and the system powered from the built-in 28 volt battery.

(2) Limited operation is defined as three, UHF, three VHF/AM and one VHF/FM channel tuned and available for communication, shelter and skid platform mounted on the trucks, window screens removed, shelter stairway, entry and roof access steps in place and the system grounded and powered from the primary generator.

(3) Full operation is defined as all equipment operational (including two, 2 wire telephone lines and the emergency alarm and NAVAID monitor circuits connected), with the skid platform lowered from the truck bed to the ground, the shelter in its elevated position on jacks (less ground anchors) and all equipment in place (i.e. chairs, flight strips and light signal guns).

b. For night deployments, the above noted assembly times for emergency and limited operation shall be extended by 20 minutes and full operation by 30 minutes. All cables (including RF) assembled during system deployment shall utilize keyed connectors or other means to prevent wrong connections during blackout conditions when identifying labels are not visable. Disassembly times from operational to transit configuration shall be the same as assembly times for similar types of deployments.

Downloaded from http://www.everyspec.com



4.10.13 Fork lift. The shelter and skid platform shall be lifted approximately four feet from a level surface using a standard fork lift vehicle, (fork lift extensions must go through all skids) and then returned to the ground. The test shall be repeated four times alternating between opposite sides of the shelter. There shall be no physical damage. An appropriate notice shall be placed on the side of the shelter and skid platform to define proper fork lift operating techniques.

4.11 Interchangeability. Interchange like adapter chassis to determine compliance with 3.7.

4.12 Visual and mechanical inspection. The assembly shall be examined for defects as listed in MIL-STD-252 to determine compliance with 3.18.

4.12.1 Safety inspection. An inspection shall be performed to verify compliance with those portions of 3.16 which can be determined visually.

4.13 Packaging inspection. Packaging inspection requirements specified herein are classified as follows:

a. First Article Inspection of Packaging.

b. Quality Conformance Inspection of Packaging.

4.13.1 First article inspection of packaging. Unless otherwise specified in the contract, First Article inspection of Packaging shall be in accordance with the Unit Pack Design Validation Requirements of MIL-P-116.

4.13.2 Quality conformance inspection of packaging.

4.13.2.1 Materials inspection. All materials to be used in packaging shall be inspected in accordance with the applicable material specification.

Downloaded from http://www.everyspec.com



4.13.2.2 Preservation inspection. Inspection of preservation and interior markings shall be in accordance with Group A and B Quality Conformance Inspection Requirements of MIL-P-116. Lot information and sampling procedures shall be as specified therein.

4.13.2.3 Packing inspection. Inspection of packing and the marking for shipment and storage shall consist of the examinations specified in Table V "PACKING INSPECTION PROVISIONS". Lot formation shall consist of all packs made of the same materials during an identifiable period and submitted at one time for acceptance. Sampling procedures shall be in accordance with MIL-STD-105, using a single sampling plan and Acceptable Quality Level of 4.0 percent defective.

Table V. Packing inspection provisions.

| NO. | CHARACTERISTICS | METHOD OF INSPECTION |
|---|---|---|
| 101 | Intermediate container not as specified | Visual |
| 102 | Improper closure of intermediate container | Visual |
| 103 | Shipping containers not in accordance with specification | Visual |
| 104 | Excessive cube | Visual |
| 105 | Improper blocking and bracing | Visual |
| 106 | Closure not in accordance with specification | Visual |
| 107 | Weight and size container limitations | Weight & Measure |
| 108 | Strapping not in accordance with specification, incorrectly applied, omitted | Visual |
| 109 | Marking omitted, incorrect or illegible | Visual |

Downloaded from http://www.everyspec.com



## 5. PACKAGING

5.1 Packing requirements. The requirements for packaging shall be in accordance with SPI 1G00193.

## 6. NOTES

6.1 Intended use. Air Traffic Control Central AN/TSW-7A is an air and ground transportable air traffic control tower which facilitates the control of aircraft on the ground and in the air in the vicinity of a terminal area when operating under visual meteorological conditions.

6.2 Ordering data. Procurement documents should specify the following:

a. Title, number, and date of this specification and any amendment thereto.

b. First Article Inspection:

(1) Several units of the item cited in 3.3 are generally required so that lengthy environmental tests can be completed on specified sample units while complete performance measurements can be made on one sample unit. (See 3.3)

(2) When first article inspection rough handling tests are not required.

(3) When first article packaging inspection test reports require Acquisition Activity approval prior to production unit packing.

c. Marking and shipping of sample.

d. Place of final inspection.

e. Modification letter suffix to nomenclature if required.

Downloaded from http://www.everyspec.com



f. Serial number requirements.

g. Level A or B preservation and packing (see section 5).

h. Technical Literature required.

6.3 Verification inspection. Verification by the Government will be limited to the amount deemed necessary to determine compliance with the contract and will be limited in severity to the definitive Quality Assurance provisions established in this specification and the contract. The amount of verification inspection by the Government will be adjusted to make maximum utilization of the contractor's quality control system and the quality history of the product.

6.4 Level B preservation. When level B preservation is specified, this level of protection will only be used under known favorable conditions during transportation, storage and handling.

6.5 Environmental. Environmental pollution prevention measures are contained in the packaging material specification referenced herein. Refer to material specifications or preparing activity for recommended disposability methods.

Custodian
Army AV

Preparing Activity
Army AV
Project No. 5895-A308

Downloaded from http://www.everyspec.com

# STANDARDIZATION DOCUMENT IMPROVEMENT PROPOSAL

*(See Instructions – Reverse Side)*

| 1. DOCUMENT NUMBER | 2. DOCUMENT TITLE |
|---|---|
| MIL-A-49067A | AIR TRAFFIC CONTROL CENTRAL AN/TSW-7A |

| 3a. NAME OF SUBMITTING ORGANIZATION | 4. TYPE OF ORGANIZATION *(Mark one)* |
|---|---|
| | ☐ VENDOR |
| b. ADDRESS *(Street, City, State, ZIP Code)* | ☐ USER |
| | ☐ MANUFACTURER |
| | ☐ OTHER *(Specify)*: _____ |

5. PROBLEM AREAS

a. Paragraph Number and Wording:

b. Recommended Wording:

c. Reason/Rationale for Recommendation:

6. REMARKS

| 7a. NAME OF SUBMITTER *(Last, First, MI)* – Optional | b. WORK TELEPHONE NUMBER *(Include Area Code)* – Optional |
|---|---|
| c. MAILING ADDRESS *(Street, City, State, ZIP Code)* – Optional | 8. DATE OF SUBMISSION *(YYMMDD)* |

DD FORM 82 MAR 1426

PREVIOUS EDITION IS OBSOLETE.