Downloaded from http://www.everyspec.com

MIL-A-46146A
31 March 1981
SUPERSEDING
MIL-A-46146
9 November 1970

MILITARY SPECIFICATION

# ADHESIVES-SEALANTS, SILICONE, RTV, NONCORROSIVE (FOR USE WITH SENSITIVE METALS AND EQUIPMENT)

This specification is approved for use by all Departments and Agencies of the Department of Defense.

## 1. SCOPE

1.1 Scope. This specification covers three types of one-part, room temperature-vulcanizing, non-fuel resistant, silicone compounds which cure to durable, rubber sealants and adhesives upon contact with moisture in the air. This specification also covers primers (see 6.1.3) for use with the silicone compounds.

1.2 Classification.

1.2.1 Types of silicone compounds. The silicone compounds shall be furnished in one of the following types as specified (see 6.2).

Type I - Soft spreadable thixotropic paste
Type II - Self-leveling liquid
Type III - High strength, noncorrosive

1.2.2 Primer. The primer (if required) shall be either Type I or II (see 3.3.3) as recommended by the manufacturer of the silicone compound (see 6.1.3).

## 2. APPLICABLE DOCUMENTS

2.1 The following documents of the issue in effect on date of invitation for bids or request for proposal, form a part of this specification to the extent specified herein.

Beneficial comments (recommendations, additions, deletions) and any pertinent data which may be of use in improving this document should be addressed to: Director, US Army Materials and Mechanics Research Center, ATTN: DRXMR-LS, Watertown, MA 02172 by using the self-addressed Standardization Document Improvement Proposal (DD Form 1426) appearing at the end of this document or by letter.

FSC 8040

Downloaded from http://www.everyspec.com



FEDERAL

SPECIFICATIONS

J-C-30 - Cable and Wire, Electrical (Power, Fixed Installation)
QQ-A-250/4 - Aluminum Alloy 2024, Plate and Sheet
QQ-B-613 - Brass, Leaded and Nonleaded: Flat Products (Plate, Bar, Sheet, and Strip)
QQ-S-698 - Steel, Sheet and Strip, Low Carbon
PPP-B-566 - Boxes, Folding, Paperboard
PPP-B-601 - Box, Wood, Cleated-Plywood
PPP-B-636 - Box, Fiberboard
PPP-B-676 - Boxes, Set-up
PPP-C-96 - Cans, Metal, 28 Gage and Lighter
PPP-C-300 - Chemicals Liquid; Packaging and Packing of
PPP-D-705 - Drum: Metal Shipping, Steel (Over 12 and under 55 Gallon)
PPP-D-729 - Drums: Metal, 55-Gallon (For Shipment of Noncorrosive Material)
PPP-D-732 - Drums, Metal, 55-Gallon Reconditioned (For Shipment of Non-corrosive Materials)
PPP-D-704 - Pails, Metal: (Shipping, Steel 1 through 12 Gallon)
PPP-T-1637 - Tubes, Shipping, Collapsible

(Activities outside the Federal Government may obtain copies of Federal specifications, standards, and handbooks as outlined under General Information in the Index of Federal Specifications and Standards and at the prices indicated in the Index. The Index which includes cumulative monthly supplements as issued, is for sale on a subscription basis by the Superintendent of Documents, US Government Printing Office, Washington, DC 20402.

(Single copies of this specification and other product specifications required by activities outside the Federal Government for bidding purposes are available without charge from General Services Administration Business Office Centers in Boston; New York; Philadelphia; Washington, DC; Atlanta; Chicago; Kansas City, MO; Ft. Worth; Houston; Denver; San Francisco; Los Angeles; and Seattle.

(Federal Government activities may obtain copies of Federal specifications, standards, and handbooks and the Index of Federal Specifications and Standards from established distribution points in their agencies.)

MILITARY

STANDARDS

MIL-STD-105 - Sampling Procedures and Tables for Inspection by Attributes
MIL-STD-129 - Marking for Shipment and Storage
MIL-STD-147 - Palletized and Containerized Unit Loads 40" X 48" Pallets, Skids, Runners, or Pallet-Type Base
MIL-STD-1188 - Commercial Packaging of Supplies and Equipment

Downloaded from http://www.everyspec.com



(Copies of specifications, standards, drawings, and publications required by suppliers in connection with specific procurement functions should be obtained from the procuring activity or as directed by the contracting officer.)

2.2 Other publications. The following documents form a part of this specification to the extent specified herein. Unless otherwise indicated, the issue in effect on date of invitation for bids or request for proposal shall apply.

AMERICAN SOCIETY FOR TESTING AND MATERIALS (ASTM) STANDARDS

D149 - Dielectric Breakdown Voltage and Dielectric Strength of Electrical Insulating Materials at Commercial Power Frequencies
D150 - A-C Loss Characteristics and Dielectric Constant (Permittivity) of Solid Electrical Insulating Materials (Tentative)
D257 - D-C Resistance of Conductance of Insulating Materials
D412 - Tension Testing of Vulcanized Rubber
D573 - Accelerated Aging of Vulcanized Rubber by the Oven Method
D746 - Brittleness Temperature of Plastics and Elastomers by Impact
D903 - Peel or Stripping Strength of Adhesive Bonds
D1002 - Strength Properties of Adhesives in Shear by Tension Loading (Metal-to-Metal)
D1084 - Viscosity of Adhesives
D1298 - Density, Specific Gravity, or API Gravity of Crude Petroleum and Liquid Petroleum Products by Hydrometer Method
D2240 - Indentation Hardness of Rubber and Plastics by Means of a Durometer

(Application for copies should be addressed to the American Society for Testing and Materials, 1916 Race Street, Philadelphia, PA 19103.)

Technical society and technical association specifications and standards are generally available for reference from libraries. They are distributed among technical groups and using Federal agencies.

3. REQUIREMENTS

3.1 First article. The sealing compound and primer (when required, see 6.2) furnished under this specification shall be a product which has been inspected and has passed the first article examination as specified in 4.4.1 and 4.6.1.3 (as applicable) and all tests of this specification as specified in 4.5.3.1. Two representative containers of the silicone compound and two representative containers of the primer (if required) shall be selected for the tests. Approval of the first article inspection samples by the procuring activity shall not relieve the contractor of his obligation to supply silicone compound and primer that shall conform to the requirements of this specification. Any change or deviation from the complete inspection responsibility for the performance of the first article inspection shall be as specified by the procuring activity (see 6.2).

Downloaded from http://www.everyspec.com



3.2 Material.

3.2.1 Silicone compound. The silicone compound shall be supplied in the type and color as specified (see 6.2) and shall vulcanize at room temperature to produce a rubbery compound to meet the physical and electrical properties of this specification.

3.2.2 Primer. The primer of the color specified (see 6.2) shall be an air drying liquid to meet the physical properties of this specification (see 3.3.3).

3.3 Product characteristics.

3.3.1 Uncured silicone compound. The uncured silicone compound shall be in accordance with the requirements of Table I.

Table I. Physical properties of uncured silicone compound.

| Property | Requirements Type I | Type II | Type III | Test paragraph |
|---|---|---|---|---|
| Total solids content, (%) | 92 min | 92 min | 92 min | 4.5.3.3.1 |
| Extrusion rate (grams/min) | 100 min | - | 40 min | 4.5.3.3.3 |
| Flow (inches) | 0.5 max | - | 0.75 max | 4.5.3.3.4 |
| Viscosity (poises) | - | 150-550 | - | 4.5.3.3.5 |
| Tack free time (hours) | 5.0 max | 5.0 max | 5.0 max | 4.5.3.3.6 |

3.3.1.1 Corrosion. The silicone compound (and primer if required for test (b) and (c)) shall not cause discoloration or corrosion attack when tested as follows:

a. Corrosion of brass, steel and aluminum over water (see 4.5.3.3.7.1).

b. Corrosion of copper wire by direct contact (see 4.5.3.3.7.2).

c. Corrosion of steel and aluminum by direct contact (see 4.5.3.3.7.3).

Downloaded from http://www.everyspec.com



3.3.1.2 Storage life. The uncured silicone compound and primer (if required) shall meet all the requirements of this specification after 6 months of storage from date of delivery. Silicone compound that meets the requirements of extrusion rate or viscosity, as applicable, (3.3.1) tensile strength (3.3.2.1), elongation (3.3.2.1), and peel strength (3.3.2.1) may be considered to meet the storage life requirements when tested after storage as specified in 4.5.3.3.9.

3.3.2 Cured silicone compound.

3.3.2.1 Physical properties. The physical properties of the cured silicone compounds shall be as specified in Table II.

Table II. Physical properties of cured silicone compound.

| Property | Requirements Type I | Type II | Type III | Test Paragraph |
|---|---|---|---|---|
| Brittle point | -80°F (-62°C) | -80°F (-62°C) | -80°F (-62°C) | 4.5.3.1.1 |
| Hardness, Shore A Durometer | 20 min | 15 min | 25 min | 4.5.3.3 |
| Tensile strength, psi | 175 min | 150 min | 500 min | 4.5.3.3 |
| Elongation, percent | 300 min | 150 min | 500 min | 4.5.3.3 |
| Peel strength, lb/1" width | 15 min | 4 min | 40 min | 4.5.3.3.8 |
| Aluminum (primer optional) | 15 min | 4 min | 40 min | 4.5.3.3.8 |
| Steel (primer optional) | 15 min | 4 min | 40 min | 4.5.3.3.8 |

Downloaded from http://www.everyspec.com



3.3.2.1.1 Resistance to heat. The cured silicone compound after exposure for 168 ± 4 hours (7 days ± 4 hours) minimum at 392 ± 4°F (200 ± 2°C) shall meet the requirements for hardness, tensile strength and elongation as specified in Table II when tested as specified in 4.5.3.1.2, except that the tensile strength and elongation for Type III material shall be 250 psi and 300 percent, respectively.

3.3.2.1.2 Hydrolytic stability, physical. The cured silicone compound after exposure for 28 days ± 4 hours at 200 ± 4°F (200 ± 2°C) shall meet the requirements for hardness, tensile strength and elongation as specified in Table II when tested as specified in 4.5.3.1.3, except that the tensile strength and elongation for Type III material shall be 250 psi and 300 percent, respectively.

3.3.2.2 Electrical properties. The electrical properties of the cured silicone compounds shall be as specified in Table III.

Table III. Electrical properties.

| Property | Requirements Type I - III | Test Paragraph |
|---|---|---|
| Volume resistivity at 73 ± 3°F, (23 ± 2°C) ohm/cm | $1 \times 10^{13}$ min | 4.5.3.1 |
| Dielectric constant 100 to 100,000 Hertz | 3.25 max | 4.5.3.1 |
| Dissipation factor 100 to 100,000 Hertz | 0.02 max | 4.5.3.1 |
| Dielectric strength, Volts/mil at 77° ± 2°F (25 ± 1°C) 75 mil thickness | 300 min | 4.5.3.3 |

Downloaded from http://www.everyspec.com



3.3.3 Primer. The primer shall conform to the requirements specified in Table IV.

Table IV. Physical properties of primers.

| Inspection Property | Type I | Type II | Paragraph |
|---|---|---|---|
| Color (see 6.2) | Clear or light straw or red | Clear or fluorescent pink | 4.4.1<br>4.5.3.3 |
| Specific gravity at (77°F) 25°C | 0.74 - .80 | 0.84 - 0.86 | 4.5.3.3 |
| Total solid content (percent) | 3 - 10 | 15 - 18 | 4.5.3.3.2 |
| Corrosion | None (See 3.3.1.1 (b) and (c)) | None (See 3.3.1.1 (b) and (c)) | 4.5.3.3.7.2 &<br>4.5.3.3.7.3 |

3.4 Marking. A label or tag shall be attached to each container of silicone compound and each container of primer with data as follows:

(a) Color and type of silicone compound, or color and type of primer as applicable.

(b) Brief instructions for the storage and care of silicone compound or primer (as applicable) prior to use.

(c) If required, a warning relative to toxicity (see 3.5).

(d) A warning as to fluid resistance (see 6.1.1).

(e) Instructions for use.

(f) Each label or tag attached to the containers of silicone compound shall contain application instructions as follows:

Application. These one-component adhesive-sealants require moisture from the air to cure. When they are used the following are required:

(a) Good ventilation during cure.
(b) Full cure before enclosure (7 days minimum for thicknesses over 1/8 inch (3.2 mm), and 14 days minimum for thicknesses over 1/4 inch (6.4 mm)).

Downloaded from http://www.everyspec.com



(c) Sufficient moisture to complete cure.
(d) Maximum thickness of 1/2 inch (12.7 mm).
(e) Maximum glueline of 1 inch (25.4 mm) when used between nonporous substrates.

3.4.1 In addition, each unit container of primer shall be marked as follows:

"CAUTION: APPLY ONLY IN A WELL VENTILATED AREA. KEEP AWAY FROM HEAT, SPARKS AND OPEN FLAME."

3.5 Toxicity. The silicone compound and primer shall have no adverse effect on the health of personnel when used for its intended purpose (see 4.5.3.3.11).

3.6 Workmanship. The uncured silicone compound furnished under this specification shall be uniform in quality and consistency and shall be free of agglomerates or foreign particles. The cured compound shall present an appearance of smooth homogeneity. There shall be no other defect present which might render the end product unsuitable for its intended purpose. The primer shall be homogeneous and contain no foreign matter.

4. QUALITY ASSURANCE PROVISIONS

4.1 Responsibility for inspection. Unless otherwise specified in the contract, the contractor is responsible for the performance of all inspection requirements as specified herein. Except as otherwise specified in the contract, the contractor may use his own or any other facilities suitable for the performance of the inspection requirements specified herein, unless disapproved by the Government. The Government reserves the right to perform any of the inspections set forth in the specification where such inspections are deemed necessary to assure supplies and services conform to prescribed requirements.

4.2 Lot. A lot of silicone compound or primer shall consist of that quantity of material produced in one continuous operation from one batch of raw materials at one place of manufacture and offered for delivery at one time.

4.3 Sampling.

4.3.1 For examination. Unless otherwise specified a random sample of filled containers shall be selected for examination in accordance with level S-1 of MIL-STD-105.

4.3.2 Sampling for tests. Two representative containers of each type of silicone compound and a representative container of primer shall be selected from each lot for all required tests (see 4.5.3).

Downloaded from http://www.everyspec.com



4.4 Examination.

4.4.1 Silicone compound and primer (if required). Sample units selected in accordance with 4.3.1 shall be examined for defects and at the acceptable quality levels shown in Table V.

Table V. Classification of defects

| Item | AQL percent | Classification of defect | Defect | Method of inspection |
|---|---|---|---|---|
| | | Critical | None defined | |
| Silicone compound (see 4.3.1, 3.2.1, and 3.6) | 1.0 | Major 101 | Wrong type | Visual |
| | | Major 102 | Wrong color | Visual |
| | | Major 103 | Not uniform | Visual |
| | | Major 104 | Not free from agglomerates or foreign particles | Visual |
| | | Major 105 | Not homogeneous | Visual |
| Primer (see 4.3.1 3.3.3, and 3.6) | 1.0 | Major 106 | Wrong type | Visual |
| | | Major 107 | Color not as specfied | Visual |
| | | Major 108 | Not homogeneous | Visual |
| | | Major 109 | Contains foreign matter 1/ | Visual |

1/ Some white precipitate with age is normal, and this should not be considered foreign matter.

4.5 Tests.

4.5.1 Preparation of specimens. Samples of uncured silicone compound selected as specified in 4.3.2 and conditioned as specified in 4.5.2.1 shall be used for the test. The equipment shall consist of a hydraulic or mechanical press and an open-face mold with a cavity 0.075 ± 0.010 inch (1.9 ± 0.3 mm) deep. The mold cavity shall be not less than 6 inches (152 mm) long by 4 inches (102 mm) wide. Specimens may be prepared by either Procedure A (4.5.1.1) or Procedure B (4.5.1.2).

4.5.1.1 Procedure A.

(a) Lay a piece of polyethylene coated paper that is larger than the face of the mold against the bottom of the mold.
(b) Apply a solution (Dupanol WAQ, (see 6.6)) diluted with 5 percent alcohol or equal is satisfactory) to the polyethylene coated paper to act as a release agent and allow to air dry for a minimum of 5 minutes. The mold release shall be of uniform thickness and free of entrapped air and imperfections.
(c) Place the chase frame on the mold.

Downloaded from http://www.everyspec.com



(d) Fill the mold with the silicone compound and spread it to fill the chase (knife spread if Type I thixotropic paste). Molded sheet shall be of uniform thickness and free of entrapped air and surface irregularities.

(e) Type I. For type I (thixotropic paste) silicone compound, remove the chase when the sample has been spread into the chase and place the material on a rack that provides air exposure.

Type II. For Type II (self-leveling liquid) silicone compound keep the chase frame in position until the compound is cured, then remove the chase and place the paper with the material on a rack that provides air exposure.

4.5.1.2 Procedure B.

(a) Spray mold with Poly Lease 77 or an equivalent release agent.

(b) Prepare release paper by soaking a sheet of Ozalid reproduction paper (APECO Positive Paper No. 2, or equivalent) in distilled water for 1 to 5 minutes.

(c) Place wet release paper on upper face of mold with gelatin surface facing the silicone compound. Wipe excess water from the release paper.

(d) Fill the mold cavity with the silicone compound. Close the mold and press with approximately 50 psi (345 kPa) pressure.

(e) After 1 hour lift the upper face of the mold and carefully remove the paper from the sheet. Leave the sheet in the mold with the upper face exposed until the sheet is well cured. This usually requires 6 - 18 hours. Leave the sheet in the mold no longer than 24 hours.

4.5.2 Conditioning of specimens.

4.5.2.1 Uncured silicone sompound. The uncured silicone compound before being tested shall be conditioned at 77 ± 2°F (25 ± 1°C) and 50 ± 5 percent relative humidity for not less than 48 hours.

4.5.2.2 Cured silicone compound. Before being tested for all requirements of this specification the silicone compound prepared as specified in 4.5.1 shall be cured at 77 ± 2°F (25 ± 1°C) and 50 ± 5 percent relative humidity for 168 ± 4 hours (7 days ± 4 hours).

4.5.3 Classification of tests. Tests for the silicone compound and primer shall be classified as follows:

(a) First article test (see 4.5.3.1)
(b) Comparison tests (see 4.5.3.2)
(c) Lot acceptance tests (4.5.3.3)

Downloaded from http://www.everyspec.com



4.5.3.1 First article tests. First article tests shall be conducted on the first article sample (see 3.1) and also at the discretion of the procuring activity (see 4.5.3.2). The first article test shall consist of all tests of this specification, namely, the lot acceptance test (see 4.5.3.2) and the additional tests as indicated in Table VI.

Table VI. Additional tests for first article inspection.

| Characteristic | Requirement | Test Method |
|---|---|---|
| Corrosion | 3.3.1.1 (b) | 4.5.3.3.7.2 |
| | 3.3.1.1 (c) | 4.5.3.3.7.3 |
| Brittle point | 3.3.2.1 | 4.5.3.1.1 |
| Resistance to heat | 3.3.2.1.1 | 4.5.3.1.2 |
| Hydrolytic stability, physical | 3.3.2.1.2 | 4.5.3.1.3 |
| Volume resistivity | 3.3.2.2 | ASTM D257 |
| Dielectric constant | 3.3.2.2 | ASTM D150 |
| Dissipation factor | 3.3.2.2 | ASTM D150 |
| Storage life (uncured compound) | 3.3.1.2 | 4.5.3.3.9 |

4.5.3.1.1 Brittle point. Samples of uncured silicone compound shall be prepared as specified in 4.5.1 and cured as specified in 4.5.2.2. Modified T-50 specimens shall be die punched from the pads. Tests shall be in accordance with Procedure B of ASTM Method D746.

4.5.3.1.2 Resistance to heat. Specimens of the silicone compound prepared as specified in 4.5.1 and cured as secified in 4.5.2.2 shall be oven aged as specified in ASTM D573 for the duration and temperature as specified in 3.3.2.1.1. At the end of the exposure time the test specimens shall be brought to and tested at room temperature for compliance with the requirements of 3.3.2.1.1.

4.5.3.1.3 Hydrolytic stability, physical. Specimens of the silicone compound prepared as specified in 4.5.1 and cured as specified in 4.5.2.2 shall be placed vertically in a suitable holder on a tray in a suitable glass desiccator. The bottom of the desiccator shall contain a glycerine (22 percent by weight) in water solution which will produce a relative humidity (RH) of 95 percent at the test temperature. The desiccator containing the specimens shall be closed and then placed in an air circulating oven maintained at 200 $\pm$ 4°F (93 $\pm$ 2°C) for a period of 28 days $\pm$ 4 hours. At the end of the exposure period the desiccator shall be removed from the oven and cooled to 77 $\pm$ 2°F (25 $\pm$ 1°C) for 16 to 24 hours. The specimens shall then be removed from the desiccator and tested for hardness, tensile strength and elongation as specified in 3.3.2.1.2.

Downloaded from http://www.everyspec.com



4.5.3.2. Comparison tests. The procuring activity may require that subsequent lots of silicone compound be subject to any or all of the first article tests. If a lot should fail comparison tests no further lot will be accepted until the supplier has presented sufficient evidence to show that the condition which caused the failure has been corrected.

4.5.3.3 Lot acceptance tests. Lot acceptance tests shall be made on each lot of silicone compound and primer (if required) and together with the examination (see 4.4.1 and 4.6.1.3) shall be the basis for acceptance or rejection of the lot. Lot acceptance tests shall consist of the tests indicated in Table VII.

Table VII. Lot acceptance tests.

| Characteristic | Requirements Type I | Type II | Type III | Test Paragraph |
|---|---|---|---|---|
| Uncured compound | | | | |
| Total solids content | 3.3.1 | 3.3.1 | 3.3.1 | 4.5.3.3.1 |
| Extrusion rate | 3.3.1 | --- | 3.3.1 | 4.5.3.3.3 |
| Flow | 3.3.1 | --- | 3.3.1 | 4.5.3.3.4 |
| Viscosity | --- | 3.3.1 | --- | 4.5.3.3.5 |
| Tack free time | 3.3.1 | 3.3.1 | 3.3.1 | 4.5.3.3.6 |
| Corrosion 1/ | 3.3.1.1 (a) | 3.3.1.1 (a) | 3.3.1.1 (a) | 4.5.3.3.7.1 |
| Cured compound | | | | |
| | | Types I - III | | |
| Hardness | | 3.3.2.1 | | ASTM D2240 |
| Tensile strength | | 3.3.2.1 | | ASTM D412 (Die C) |
| Elongation | | 3.3.2.1 | | ASTM D412 (Die C) |
| Peel strength | | 3.3.2.1 | | 4.5.3.3.8 |
| Dielectric strength | | 3.3.3 | | ASTM D149 |
| Primer (when required) | | | | |
| Specific gravity | | 3.3.3 | | ASTM D1298 |
| Total solids content | | 3.3.3 | | 4.5.3.3.2 |

1/ When authorized by the procuring activity shipment may be made prior to the completion of the corrosion test upon receipt of a letter (see 4.5.3.3.10) certifying that the sealing compound shall meet the corrosion test requirements of 3.3.1.1 (a).

Downloaded from http://www.everyspec.com



4.5.3.3.1 Total solids (silicone compound). Three specimens shall be tested and results averaged. Each specimen shall be tested as follows: Transfer 5 to 10 grams of the uncured silicone compound as rapidly as possible to a cup approximately 3 inches (16 mm) in diameter and 3/4 inch (19 mm) in depth. Place a fitted cover immediately over the cup to determine the weight. (The weight of the cup and the cover shall be determined accurately prior to using, and subtracted from the initial and final weights in order to calculate the net sample weights.) Then remove the cover and heat the sealing compound and cup in a dessicator, replace the cover and weigh accurately. Calculate the percent of total solids as follows:

$$\text{Percent of solids} = \frac{\text{Final weight X 100}}{\text{Initial weight}}$$

4.5.3.3.2 Total solids (primer). Three specimens of either Type I or Type II primer shall be tested by Method (a) or (b) as applicable and the results averaged.

(a) Type I. The test for total solid content of Type I primer shall be made as specified in 4.5.3.3.1 except that the primer shall be heated for 6 hours ± 5 minutes at 115 ± 2°F (46° ± 1°C).

(b) Type II. Quickly transfer 1.0 ± 0.2 grams of the primer from a weighing bottle into a tared aluminum dish measuring approximately 2 inches (50 mm) in diameter by 3/4 inch (19 mm) in depth. Place the dish containing the primer in a circulating air oven at 302 ± 9°F (150 ± 5°C) for 45 ± 5 minutes. Cool the dish and residue in a desiccator, then weigh accurately to determine the final weight. Calculate the percentage of total solids as follows:

$$\text{Solids (percent)} = \frac{(A-B) \times 100}{C}$$

A = Final weight of dish and residue
B = Weight of aluminum dish
C = Weight of primer

4.5.3.3.3 Extrusion rate (Type I sealant only). The uncured silicone compound and application gun shall be stabilized at 170 ± 4°F (77 ± 2°C) and 50 ± 5 percent relative humidity for at least 8 hours. A minimum of 250 grams of the compound shall be promptly used to fill a standard Semco or equal sealing-compound-gun cartridge having a Semco 440 nozzle or equivalent, with an orifice diameter of 1/8 inch (3 mm). The gun and sealing compound shall be maintained at the above conditions throughout the test. The gun shall be attached to a constant air supply of 90 ± 5 psi (620 ± 10 kPa) for line variation or gage error. From 2-3 inches (50-75 mm) of sealing compound shall be extruded initially to clear trapped air. The sealing compound shall be extruded onto a suitable receptacle for 1 minute and the amount of extruded sealing compound determined.

Downloaded from http://www.everyspec.com



4.5.3.3.4 Flow (Type I sealant only). The flow test shall be conducted with a flow test jig as shown in Figure 1. Depth of plunger tolerance is critical and shall be controlled within the tolerance during all tests. The flow test jig shall be placed on a table with the front face upward and with the plunger depressed to the limit of its travel. Enough of the silicone compound to fill the recessed cavity of the jig shall be rapidly transferred from a representative sample container. The compound shall not be worked with a spatula but shall be leveled off even with block by scraping with a spatula in two passes, each starting in the center and moving toward the sides of the jig. Within 10 seconds after the leveling operation, the jig shall be placed on its base and the plunger immediately advanced to the limit of its forward travel. The cylindrical section formed in the flow-test jig shall be allowed to flow under its own weight on a vertical surface. The flow test shall begin when the plunger is advanced to the limit of its forward travel, and flow measurements shall be measured from tangent to the lower edge of the plunger to the farthest point to which flow has occurred. The measurement after the indicated interval shall be considered the initial flow of the silicone compound.

4.5.3.3.5 Viscosity (Type II sealant only). The viscosity of the sealing compound shall be determined in accordance with ASTM D1084, Method B. The viscosimeter model, spindle number and speed shall be reported as part of the viscosity determination.

4.5.3.3.6 Tack-free time. At the end of the rated tack-free time of the uncured silicone compound a 1-inch by 6-inch (25 mm by 152 mm) poly- ethylene film measuring 0.004 ± 0.002 inch (0.10 ± 0.05 mm) thick shall be applied and held in place at a pressure of 1/2 ounce per square inch (0.20 kPa) for two minutes on each of several sealing compound specimens. The film shall then be slowly withdrawn at right angles to the surface of the sealing compound. The polyethylene shall come away clean and free of sealing compound.

4.5.3.3.7 Corrosion.

4.5.3.3.7.1 Corrosion of brass, steel and aluminum over water. Two panels 4 inches by 1 inch (102 mm by 25 mm) shall be prepared for each of the following metals: Copper alloy conforming to number or composition 230 of QQ-B-613, steel conforming to QQ-S-698 and aluminum conforming to QQ-A-250/4. The panels shall be cleaned with steel wool (or number 400 emry cloth of required) rinsed with acetone and blotted dry. For each of the three metals make the following tests:

Downloaded from http://www.everyspec.com



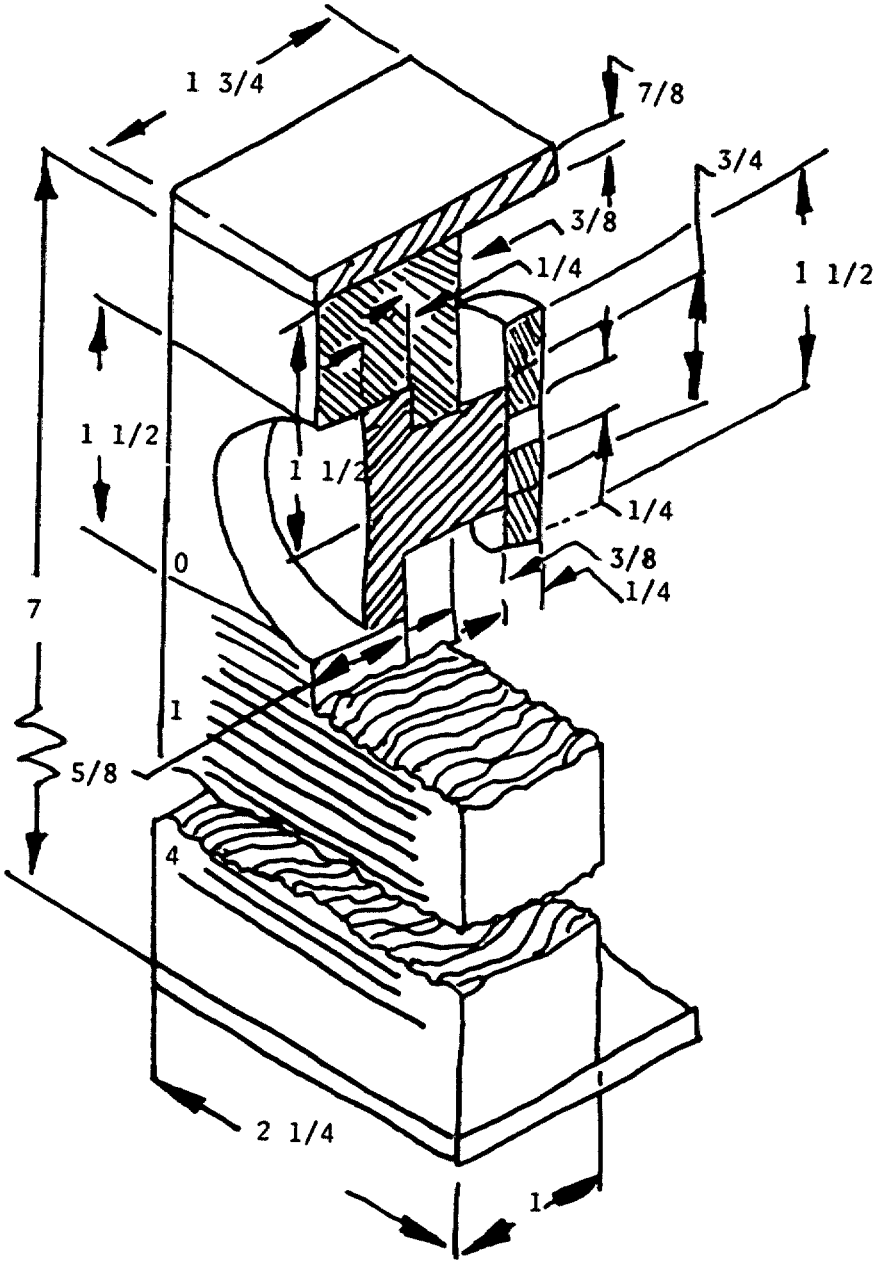


Material: Aluminum Alloy
Dimensions in inches. Unless otherwise specified, tolerances: ±0.003 in.

Figure 1. Flow test jig

Downloaded from http://www.everyspec.com



Extrude 15 grams of silicone compound into an 8-ounce (240 ml) glass bottle equipped with a PTFE lined cap. Pour 5 to 10 ml of distilled water over the sili- cone compound and hang one cleaned panel above the compound-and-water mix. Then close the top of the bottle. Pour in a control bottle of the same type 5 to 10 ml distilled water; hang the other metal panel above the water then close the top of the bottle. Maintain both the test bottle and the control bottle at 100 ± 4°F (38 ± 2°C) for 168 ± hours (7 days ± 4 hours). At the end of this period carefully remove the panels from the bottles. Visually inspect the test panel for corrosion or discoloration by comparison with the control panel for compliance with the requirements of 3.3.1.1 (a).

4.5.3.3.7.2 Corrosion of copper wire by direct contact. Prepare three 1 1/2 inches (38mm) lengths of AWG size copper wire conforming to J-C-30 by first removing all insulation and then cleaning with a suitable degreasing agent. Encapsulate 2 wire specimens one primed (if primer is required) and one un-primed centrally into a suitable mold 1 inch by 2 inch by 1/4 inch (25.4 mm by 50.8 mm by 6.4 mm). Cure the compound at 77 ± 2°F (25 ± 1°C) and 50 ± 5 percent relative humidity for 168 ± 4 hours (7 days ± 4 hours). Place the specimens along with the unpotted 1-1/2 inches (38mm) length of the above specified wire into an environment of 95 to 98 percent relative humidity and 120 ± 2°F (49 ± 1°C) for 28 days. At end of the period split open the mold and compare the wires that had been encapsulated with the control wire for compliance with the requirements of 3.3.1.1 (b) and 3.3.3.

4.5.3.3.7.3 Corrosion of steel and aluminum by direct contact. Panels ap-proximately 4 inches by 1 inch (102 mm by 25 mm) of steel and aluminum conforming to QQ-S-698 and QQ-A-250/4, respectively, shall be cleaned with steel wool or number 400 emery cloth, rinsed with acetone and blotted dry. Coat approxmiately 1/3 of the surface of each panel with the primer, if required, (see 6.2). Recoat the primed surface and an additional 1/3 of the total surface with the sealing compound to a thickness of approximately 1/16 inch (12 mm). Cure the sealing compound at 77 ± 2°F (25 ± 1°C) and 50 ± 5 percent relative humidity for 168 hours ± 4 hours (7 days ± 4 hours). Place the panels into an environment of 95 to 98 percent relative humidity and 120 ± 2°F (49 ± 1°C) for 28 days. At the end of this period remove the sealing compound by peeling and compare the surfaces that had been coated with the sealing compound by peeling and compare the surfaces that had been coated with the sealing compound with the uncoated surfaces for compliance with the requirements of 3.3.1.1 (c) and 3.3.3.

Downloaded from http://www.everyspec.com



4.5.3.3.8 Peel strength. Test for peel strength shall be as specified in ASTM Method D903 except for the following: Panels shall be of aluminum alloy conforming to QQ-A-250/4; and of cold rolled No. 1 finish (dull) sheet steel conforming to QQ-S-698. Clean, prime (if required) and air dry the panels in accordance with directions from the manufacturer. Examine the primer (if required) for compliance with 3.2.2. Coat each panel with approximately 1/16 inch (1 mm) of silicone compound. Place primed (if primer is required) 30-mesh, 10-mil wire aluminum screens or cold rolled steel strip number SAE 1008 or SAE 1010 (1/4" x 0.012" x 12") (6.3 mm x 0.3 mm x 304 mm) on the silicone compound immediately. If the screen method is used, apply a second coat 1/16 inch (1 mm) thick. Cure as specified in 4.5.2.2. Test the peel strength in accordance with ASTM D 903, except that the rate of separation shall be 2 inches (50 mm) per minute.

4.5.3.3.9 Storage life. Unless otherwise specified (see 4.5.3.3.10) two samples of the uncured silicone compound and a sample of the primer (if required) from each lot shall be stored in their original containers for 6 months at a temperature of 40 ± 2°F (4 ± 1°C) and a relative humidity of 50 ± 5 percent and then tested for compliance with 3.3.1.2. When authorized by the procuring activity the supplier may certify in lieu of a test (see 4.5.3.3.10) that the sealing compound and primers (if required) shall meet the storage life requirements specified in 3.3.1.2.

4.5.3.3.10 Certification. When specified (see 4.5.3.3 footnote 1/ and 4.5.3.3.9) the contractor shall submit a letter of certification. The letter shall be signed by a responsible agent of the certifying organization and shall be accompanied by evidence of this agent's authority to bind his principal. The Government reserves the right to check test material submitted by the supplier under certification.

4.5.3.3.11 Toxicity. The supplier shall either (1) furnish the toxicological data and formulations required to evaluate the safety of the silicone compound and primer (when required) for the proposed use or (2) the supplier shall provide assurance that the silicone compound and primer (when required) comply with the following:

(a) An acceptable toxicological study has been made (see 6.7).

(b) The product is not toxic to personnel when used as specified (see 3.5).

Downloaded from http://www.everyspec.com



4.5.4 Rejection criteria. Failure of any test specimen or sample to meet the test requirements specified herein shall be cause for rejection of the lot represented.

4.6 Inspection of packaging.

4.6.1 Quality conformance inspection of pack.

4.6.1.1 Unit of product. For the purpose of inspection, a completely processed pack prepared for shipment shall be considered a unit of product.

4.6.1.2 Sampling. Sampling for examination shall be in accordance with MIL-STD-105.

4.6.1.3 Examination. Samples selected in accordance with 4.6.1.2 shall be examined for the defects and at the acceptable quality level indicated in Table VIII.

Table VIII. Classification of defect, preparation for delivery requirments

| Item | AQL percent | Classification of defect | Defect | Method of Inspection |
|---|---|---|---|---|
| | | CRITICAL | NONE DEFINED | |
| Unit containers of silicone compound and primer (see 5.1) | 2.5 | Major 110 | Improper type | Visual |
| | | Major 111 | Improper size | Visual |
| | | Major 112 | Improper fill 1/ | Approved scale |
| | | Major 113 | Leakage | Visual |
| | | Major 114 | Improper closure | Visual |
| Intermediate packaging 3/ (see 5.1.1.1.1) | 2.5 | Major 115 | Wrong type | Visual |
| | | Major 116 | Improper size | Visual |
| | | Major 117 | Improperly closed | Visual |
| Box open (see 5.2) | 2.5 | Major 118 | Wrong type | Visual |
| | | Major 119 | Improper size | Visual |
| | | Major 120 | Wrong quantity | Visual |
| | | Major 121 | Pads or separators missing 3/ | Visual |
| Box closed | 2.5 | Major 122 | Lack of or improper strapping | Visual |
| | | Major 123 | Improperly closed | Visual |
| | | Major 124 | Gross, weight, max. | Approved scale 2/ |
| | | Major 125 | Pallets missing or improper 3/ | Visual |
| | | Major 126 | Improper marking | Visual |

1/The actual weight of a container filled with the minimum required quantity of silicone compound or primer shall be the basis for determining the acceptable weight of subsequent containers.

2/Approved by procuring activity.

3/When applicable.



Downloaded from http://www.everyspec.com

Downloaded from http://www.everyspec.com



5. PACKAGING

5.1 Preservation. Preservation shall be level A or Commercial, as specified (see 6.2).

5.1.1 Level A.

5.1.1.1 Silicone compound. The silicone compound shall be placed in tubes, cartridges, pails or drums as specified (see 6.2). The tubes shall conform to requirements of PPP-T-1637, type and class as specified (see 6.2), and the filled tubes shall be packaged in accordance with the Appendix to PPP-T-1637. The dispensing gun cartridge shall be aluminum foil wrapped. Pails shall be 5-gallon (19 liter) capacity and shall conform to PPP-P-704, Type 1, Class 2. The drums shall be 30-gallon (113 liter) capacity conforming to PPP-D-705 or 55-gallon (208 liter) capacity conforming to either PPP-D-729 or PPP-D-732. Pails and drums shall have sufficient outage to prevent leakage of contents or distortion of containers as a result of expansion of contents during transit or storage.

5.1.1.1.1 Intermediate packaging. Tubes and dispensing gun cartridges of the same size shall be packaged in snug-fitting boxes conforming to the water resistant variety of either PPP-B-566 or PPP-B-676 at the option of the contractor. Quantities and arrangements shall be in accordance with commercial practice. Box closures shall be as specified in the box specifications.

5.1.1.2 Primer. The primer (when required) shall be placed in either cans or bottles of the size specified (see 6.2). The cans shall conform to PPP-C-96 Type V, Class 4 and the cans shall be packaged in accordance with the level A requirements of the Appendix to PPP-C-96. Bottles and their packaging shall be in accordance with level A requirements of PPP-C-300.

5.1.2 Commercial. Commercial preservation shall be in accordance with MIL-STD-1188.

5.1.2.1 Silicone compound and primer. The silicone compound and primer (if required) in the size containers and quantities specified (see 6.2) shall be packaged to provide adequate protection against deterioration and damage from the supplier to the initial destination. The suppliers commercial practice may be used when it meets these requirements.

5.2 Packing. Packing shall be level A, B, or Commercial as specified (see 6.2).

5.2.1 Level A.

5.2.1.1 Silicone compound. Silicone compound tubes or cartridges preserved as specified (see 5.1) shall be packed in boxes conforming to PPP-B-601, overseas type, Style I in quantities as specified (see 6.2). Pails and drums will not require any additional packing.

Downloaded from http://www.everyspec.com



5.2.1.2 Primer. Primer (when required) preserved in cans as specified in 5.1 shall be packed in accordance with level A requirements of the Appendix to PPP-C-96 except that the exterior shipping containers shall conform to the requirements of PPP-B-601 overseas type, Style I in quantities as specified (see 6.2). Primer preserved in bottles as specified in 5.1 shall be packed in accordance with the level A requirements of PPP-C-300.

5.2.1.3 Palletization. When specified (see 6.2) 5-gallon (19 liter) pails or other exterior containers of the silicone compound and primer shall be palletized in accordance with requirements of MIL-STD-147.

5.2.2 Level B.

5.2.2.1 Silicone compound. Silicone compound in tubes or cartridges and preserved as specified (see 5.1) shall be packed in fiberboard boxes conforming to PPP-B-636 style W5c, Fiberboard boxes shall not exceed the weight limitation of the box specification. Pails and drums will require no overpacking.

5.2.2.2 Primer. Primer (when required) preserved in cans or bottles as specified in 5.1 shall be packed in accordance with level A requirements of the Appendix to PPP-C-96 (for cans) or in accordance with level A requirements of PPP-C-300 (for bottles) as applicable.

5.2.2.3 Palletization. When specified (see 6.2) 5-gallon (19 liter) pails or other extertior containers of the silicone compound and primer shall be palletized as specified in 5.2.1.3.

5.2.3 Commercial. Commercial packing shall be in accordance with MIL-STD-1188.

5.2 Marking. In addition to any special marking required by the contract or order herein, interior and exterior shipping containers shall be marked in accordance with MIL-STD-129 for military levels of protection. Commercial marking shall be in accordance with MIL-STD-1188. A label or tag shall be attached to each exterior container of silicone compound and primer (if required) with additional data as follows:

(a) Number and title of this specification.
(b) Compound type and nomenclature.
(c) Expiration date of shelf life.
(d) Brief instructions for the storage and care of the silicone compound or primer as applicable prior to use.
(e) Cure time if other than that specified (see 4.5.2.2).
(f) If required, a warning relative to toxicity.
(g) Color of silicone compound or primer (as applicable).

Downloaded from http://www.everyspec.com



6. NOTES

6.1 Intended use. Since the silicone compounds are available as thixotropic pastes, or as self-leveling liquids, they lend themselves to a variety of application techniques which are easily adapted to speciality uses as well as to production line methods. As these materials are non-corrosive to copper and other sensitive metals they are gaining wide acceptance as preferred adhesives and sealants where delicate electronic devices are involved. They are used in sealing instrument cases, as environmental seals for sealing electronic devices, as terminal sealants, for potting electronic components and as high temperature sealants.

6.1.1 WARNING. These silicone compounds are not resistant to many types of fluids such as fuel and hydraulic fluids.

6.1.2 Thickness and glue lines. With these one-component adhesive sealants which require moisture from the air to cure, the thicknesses should be limited to 1/2 inch (12 mm), and the glue lines limited to 1 inch (25 mm) between nonporous substrates.

6.1.3 Primer. The use of a primer is recommended for various substrates to achieve consistent results and obtain optimum adhesion when the silicone compound is exposed to water, high humidity and elevated temperature conditions. A primer should be used only as directed by the manufacturer and should be used only with the adhesive-sealant for which the primer was supplied. The use of silicone compound and primer combinations other than those recommended by the manufacturer may lead to loss of adhesion or bond failure.

6.2 Ordering data. Procurement documents should specify the following:

(a) Title, number and date of this specification.
(b) Type, (see 1.2.1) and color (see 6.4) of silicone compound required.
(c) Quantity of silicone compound required.
(d) Quantity of primer (if required) (see 6.1.3).
(e) Whether the silicone compound is to be preserved in tubes, cartridges, pails, or drums (see 5.1.1.1).
(f) If the silicone compound is to preserved in tubes, the type and class is required (see 5.1.1.1).
(g) Size of containers required for silicone compound and primer (see 5.1).
(h) Color of primer (if required) (see 6.5).
(i) Degree of preservation and degree of packing required (see 5.1 and 5.2).
(j) If level A packing, quantity of silicone compound (see 5.2.1.1) and primer (if required) (see 5.2.1.1) to be packed in a container.
(k) Whether 5-gallon (19 liter) pails or other exterior containers shall be palletized (see 5.2.1.3 or 5.2.2.3 as applicable).
(l) Responsibility for the performance of first article inspection (see 3.1, 6.2.1 and 6.3).

Downloaded from http://www.everyspec.com



6.2.1 Contracts or orders shall specify the following provisions for First Article inspection.

6.2.1.1 Whether First Article inspection is required. When a contractor is in continuous production of the silicone from contract to contract, consideration should be given to waive the First Article inspections. If inspection is required, indicate:

(a) Where the First Article inspection is to be conducted (at the Contractor's plant or Government or commercial laboratory).

(b) That the approval of First Article samples or the waiving of the First Article inspection shall not relieve the contractor of his obligation to fulfill all other requirements of the specification and contract.

6.3 Data. For the information of Contractors and Contracting Officers, and of the data specified in (a) subparagraphs below, (b) applicable documents listed in Section 2 of this specification, or (c) referenced lower-tier documents need not be prepared for the Government and shall not be furnished to the Government unless specified in the contract or order. The data to be furnished shall be listed on DD Form 1423 (Contractor Data Requirements List), which shall be attached to and made a part of the contract or order.

6.3.1 First Article data. When First Article samples are submitted (see 6.2), they should be accompanied by a complete inspection report showing the results of the Contractor's inspections. The inspection report shall include the following:

(a) Report of inspection graphically presented when possible, together with a detailed statement indicating compliance or extent of noncompliance with all requirements of this specification, referring specifically to paragraph numbers. Wherever a requirement is considered to be not applicable, the report shall so state.

(b) Diagrams of inspection set-ups. A complete description of inspection equipment and inspection procedures.

(c) Reproducible outline and description conditions. Where inspections specified in this specification are not considered applicable, the reason, and the substituted inspection should be clearly described.

(d) Copies of inspection log sheets.

(e) Photographs when available.

6.4 Color of silicone compound. Each manufacturer has his own colors for silicone compounds. These colors, not all made by one manufacturer, include white, red, black, translucent, gray and special colors.

Downloaded from http://www.everyspec.com



6.5 Color of primer. Each manufacturer has his own colors for the primer. The colors include clear or light straw and red, and clear or fluorescent pink (see 3.3.3).

6.6 Dupanol WAQ. Dupanol WAQ is manufactured by E.I. Dupont de Nemours & Co., Inc., Wilmington, Delaware 19898.

6.7 Toxicity. Questions pertinent to the effect of the silicone compound and primer on the health of personnel will be referred by the procuring activity to the appropriate department medical service who will act as an advisor to the procuring activity.

Custodians:
Army - MR
Navy - AS
Air Force - 11

Review activities:
Army - AR, ME, MD
Navy - AS, EC
Air Force - 11, 99

User activities:
Army - CE, MI, AL,
Navy - OS, SH, YD
Air Force - 17

Preparing activity:
Army - MR

Project No. 8040-0352

☆U.S. GOVERNMENT PRINTING OFFICE: 1981-703-023/4812

Downloaded from http://www.everyspec.com

# STANDARDIZATION DOCUMENT IMPROVEMENT PROPOSAL

INSTRUCTIONS: This form is provided to solicit beneficial comments which may improve this document and enhance its use. DoD contractors, government activities, manufacturers, vendors, or other prospective users of the document are invited to submit comments to the government. Fold on lines on reverse side, staple in corner, and send to preparing activity. Attach any pertinent data which may be of use in improving this document. If there are additional papers, attach to form and place both in an envelope addressed to preparing activity. A response will be provided to the submitter, when name and address is provided, within 30 days indicating that the 1426 was received and when any appropriate action on it will be completed.

NOTE: This form shall not be used to submit requests for waivers, deviations or clarification of specification requirements on current contracts. Comments submitted on this form do not constitute or imply authorization to waive any portion of the referenced document(s) or to amend contractual requirements.

DOCUMENT IDENTIFIER *(Number)* AND TITLE MIL-A-46146A, "Adhesives-Sealants, Silicone, RTV, Noncorrosive (For use with Sensitive Metals and Equipment) FSC 8040

NAME OF ORGANIZATION AND ADDRESS OF SUBMITTER

☐ VENDOR ☐ USER ☐ MANUFACTURER

1. ☐ HAS ANY PART OF THE DOCUMENT CREATED PROBLEMS OR REQUIRED INTERPRETATION IN PROCUREMENT USE? ☐ IS ANY PART OF IT TOO RIGID, RESTRICTIVE, LOOSE OR AMBIGUOUS? PLEASE EXPLAIN BELOW.

A. GIVE PARAGRAPH NUMBER AND WORDING

B. RECOMMENDED WORDING CHANGE

C. REASON FOR RECOMMENDED CHANGE(S)

2. REMARKS

SUBMITTED BY *(Printed or typed name and address — Optional)*

TELEPHONE NO.

DATE

DD FORM 1426 1 OCT 76

EDITION OF 1 JAN 72 WILL BE USED UNTIL EXHAUSTED.