Downloaded from http://www.everyspec.com

INCH-POUND
MIL-A-24779(SH)
15 December 1992

MILITARY SPECIFICATION

ANODES, SACRIFICIAL ALUMINUM ALLOY

This specification is approved for use by the Naval Sea Systems Command, Department of the Navy, and is available for use by all Departments and Agencies of the Department of Defense.

1. SCOPE

1.1 Scope. This specification covers the general requirements and inspections for aluminum alloy sacrificial anodes for U.S. Navy ships and submarines.

1.2 Classification. Anodes are of the following types and styles, as specified (see 6.2).

(a) Type AHS - Aluminum, hull slab (steel strap core) (see figures 1 and 2).
(b) Type ASS - Aluminum, submarine slab (steel strap core) (see figure 3).
(c) Type ATS - Aluminum, teardrop shape (steel strap core) (see figure 4).
(d) Type AHC - Aluminum, hull slab (steel core) (see figures 5, 6, 7, and 8).
(e) Type AEP - Aluminum, fairwater disc (pipe core or pipe bushing core) (see figure 9).

(1) Style A - Square slab.
(2) Style B - Circular slab.
(3) Style C - Semi-circular slab.

(f) Type ABP - Aluminum, bar (pipe core) (see figure 10).
(g) Type APN - Aluminum, plate (no core) (see figure 11).

Beneficial comments (recommendations, additions, deletions) and any pertinent data which may be of use in improving this document should be addressed to: Commander, Naval Sea Systems Command, SEA 05Q42, 2531 National Center Building 3, Washington, DC 20362-5160 by using the self-addressed Standardization Document Improvement Proposal (DD Form 1426) appearing at the end of this document or by letter.

AMSC N/A FSC 3426
DISTRIBUTION STATEMENT A. Approved for public release; distribution is unlimited.

Downloaded from http://www.everyspec.com

2. APPLICABLE DOCUMENTS

2.1 Government documents.

2.1.1 Specifications, standards, and handbooks. The following specifications, standards, and handbooks form a part of this document to the extent specified herein. Unless otherwise specified, the issues of these documents are those listed in the issue of the Department of Defense Index of Specifications and Standards (DODISS) and supplement thereto, cited in the solicitation (see 6.2).

SPECIFICATIONS

FEDERAL

PPP-B-601 - Boxes, Wood, Cleated-Plywood.
PPP-B-621 - Boxes, Wood, Nailed and Lock-Corner.

MILITARY

MIL-P-15011 - Pallets, Material Handling, Wood Post Construction, 4-Way Entry.

STANDARDS

MILITARY

MIL-STD-129 - Marking for Shipment and Storage.
MIL-STD-1186 - Cushioning, Anchoring, Bracing, Blocking and Waterproofing; with Appropriate Test Methods.

(Unless otherwise indicated, copies of federal and military specifications, standards, and handbooks are available from the Standardization Documents Order Desk, BLDG. 4D, 700 Robbins Avenue, Philadelphia, PA 19111-5094.)

2.1.2 Other Government documents, drawings, and publications. The following other Government documents, drawings, and publications form a part of this document to the extent specified herein. Unless otherwise specified, the issues are those cited in the solicitation.

DEPARTMENT OF LABOR, OCCUPATIONAL SAFETY AND HEALTH ADMINISTRATION (OSHA)

Code of Federal Regulations (CFR)

29 CFR 1910 and 1915 - Hazard Communication Standard.

(The Code of Federal Regulations (CFR) and the Federal Register (FR) are for sale on a subscription basis by the Superintendent of Documents, U.S. Government Printing Office, Washington, DC 20402. When indicated, reprints of certain regulations may be obtained from the Federal agency responsible for issuance thereof.)

Downloaded from http://www.everyspec.com

2.2 Non-Government publications. The following document(s) form a part of this document to the extent specified herein. Unless otherwise specified, the issues of the documents which are DOD adopted are those listed in the issue of the DODISS cited in the solicitation. Unless otherwise specified, the issues of documents not listed in the DODISS are the issues of the documents cited in the solicitation (see 6.2).

AMERICAN SOCIETY FOR TESTING AND MATERIALS (ASTM)

A 36 - Standard Specification for Structural Steel. (DoD adopted)
D 3951 - Standard Practice for Commerical Packaging. (DoD adopted)
E 34 - Standard Test Methods for Chemical Analysis of Aluminum and Aluminum Base Alloys. (DoD adopted)
E 290 - Standard Test Method for Semi-Guided Bend Test for Ductility of Metallic Materials. (DoD adopted)

(Application for copies should be addressed to the American Society for Testing and Materials, 1916 Race Street, Philadelphia, PA 19103.)

STEEL STRUCTURES PAINTING COUNCIL (SSPC)

SP 10 - Near-White Blast Cleaning.

(Application for copies should be addressed to the Steel Structures Painting Council, 4400 Fifth Avenue, Pittsburgh, PA 15213.)

(Non-Government standards and other publications are normally available from the organizations that prepare or distribute the documents. These documents also may be available in or through libraries or other informational services.)

2.3 Order of precedence. In the event of a conflict between the text of this document and the references cited herein, the text of this document takes precedence. Nothing in this document, however, supersedes applicable laws and regulations unless a specific exemption has been obtained.

3. REQUIREMENTS

3.1 Qualification. Anodes furnished under this specification shall be products which are authorized by the qualifying activity for listing on the applicable qualified products list at the time of award of contract (see 4.3 and 6.3).

3.2 Material. The material described by this specification contains elements for which the Occupational Safety and Health Administration (OSHA) has set standards for exposure limits. Handling, storage, and application of this material shall be in accordance with 29 CFR 1910 and 1915 and any other safety/health regulations (local or otherwise) which may apply.

3.2.1 Chemical composition. The chemical composition shall be as specified in table I (see 4.6.3.1 and 4.6.3.2).

Downloaded from http://www.everyspec.com

TABLE I. Chemical composition.

Element	Weight (percent)
Indium	0.014 - 0.020
Zinc 1/	4.0 - 6.5
Silicon	0.08 - 0.20
Copper	0.004 maximum
Iron	0.090 maximum
Mercury	0.001 maximum
Tin	0.001 maximum
Others (each)	0.020 maximum (total not to exceed 0.10 percent)
Aluminum 1/	Remainder

1/ Aluminum and zinc raw material purity shall be 99.8 percent by weight (minimum).

3.2.2 Recovered materials. Unless otherwise specified herein, all equipment, material, and articles incorporated in the products covered by this specification shall be new and may be fabricated using materials produced from recovered materials to the maximum extent practicable without jeopardizing the intended use. The term "recovered materials" means materials which have been collected or recovered from solid waste and reprocessed to become a source of raw materials, as opposed to virgin raw materials. None of the above shall be interpreted to mean that the use of used or rebuilt products is allowed under this specification unless otherwise specified.

3.3 Service performance. The aluminum alloy anodes covered by this specification shall remain electrochemically active and provide continuous cathodic protection in seawater and brackish water service until they are consumed. Anode properties should be reasonably consistent given the range of operating conditions normally encountered during extended marine service (for example, transition from sea to brackish water, or varying seawater temperatures, salinity, and so forth).

3.5 Construction.

3.5.1 Steel straps. Type AHS, ASS, ATS, and AHC anodes shall have strap cores of a steel material in accordance with ASTM A 36.

3.5.2 Pipe cores. Type ABP and AEP anodes shall have core inserts from mild steel pipe or pipe couplings.

Downloaded from http://www.everyspec.com

3.5.3 Steel core surface preparation. Steel core material shall be free of surface oxides such as rust, or other coatings including galvanizing, cadmium, or tin. The steel core shall be abrasive blasted to a near white finish in accordance with SSPC SP-10 and cast within the aluminum anode within 4 hours after blasting to insure minimal buildup of surface oxides.

3.5.4 Weight. Minimum weight requirements are indicated on figures 1 through 11. The total weight of the specified type of anode received divided by the total number of anodes of that type, shall be equal to or greater than the minimum weight of anode type specified (see 4.5). If the weight is less than the minimum weight for the type of anode specified, it shall be cause for rejection of the entire lot.

3.5.5 Dimensions. Anode dimensions shall be as specified on figures 1 through 11 (see 4.5). Anode length, width, or thickness shall not vary by more than 1/8 inch when measured at sites 1 inch from any corner. The diameter of type AEP anodes shall not vary by more than 1/8 inch from the specified diameter. Cores and straps for anode types AHS, ASS, ATS, and AHC shall be positioned so they are embedded 1/4 inch (6.35 millimeters (mm)) minus 1/16 inch (1.59 mm) plus 1/8 inch (3.18 mm), as shown on figures 1 through 8 which may be measured from either surface, as applicable, except figure 3b which shall be embedded 3/8 inch, minus 1/16 or plus 1/8 inch. The type AHC anodes shown on figures 6 and 8 are intended for use with rubber washers. Countersinks for rubber washers shall be cast or machined. The anodes shall be manufactured so the countersinks are centered on the core straps. Type ASS anodes shown on figure 3 may be mounted by welding or by fasteners. Those intended to be attached by fastener shall have appropriate mounting holes in the straps. For type AEP and ABP anodes (figures 9 and 10), the position of the pipe core insert shall not vary more than 1/8 inch (3.18 mm) from the center.

3.5.6 Stud hole elongation for ASS type anodes. When specified (see 6.2), ASS straps may be modified as shown on figure 3.

3.6 Marking. Each anode shall be cut or die-stamped with the manufacturer's symbol, the letters "AL", and a unique, nonrecurring heat number. For anode types AHS, ASS, ATS, and AHC, the heat number shall be applied to the back of the anode (opposite from the exposed face). The aluminum anodes, types AHS, AHC, ASS, and ABP, shall have the words "DO NOT PAINT" die-stamped or cast on the exposed face of the anodes.

3.7 Workmanship. Consistent with good commercial practice, the aluminum anodes shall be free of flash, burrs, cracks, blow holes, and surface slag (see 4.5). The cast anodes shall be free of shrinkage cavities exceeding 1/4 inch (6.35 mm) in depth, except that anodes 2 inches (5.08 cm) thick or more shall be free of shrinkage cavities exceeding 3/8 inch (9.53 mm) in depth, when measured from a straight edge placed diagonally across the opposite edges of the anode. In addition to the above allowable shrinkage cavities, surface irregularities on the anode exceeding 1/8 inch (3.18 mm) in depth will not be permitted on one face of slab or disc type anodes unless at least 1/8 inch (3.18 mm) of sound metal covers the entire strap. Metal core extension from the anode shall be smooth and free of sharp burrs.

3.8 Core Bondng Test. The gap between the aluminum alloy and the steel strap/core shall be less than 0.002 inches for at least 50% of the interfacial length (see 4.6.1).

Downloaded from http://www.everyspec.com

3.9 Bend Test. Any evidence of cracking is cause for rejection of the entire lot (see 4.6.2).

4. QUALITY ASSURANCE PROVISIONS

4.1 Responsibility for inspection. Unless otherwise specified in the contract or purchase order, the contractor is responsible for the performance of all inspection requirements (examinations and tests) as specified herein. Except as otherwise specified in the contract or purchase order, the contractor may use his own or any other facilities suitable for the performance of the inspection requirements specified herein, unless disapproved by the Government. The Government reserves the right to perform any of the inspections set forth in this specification where such inspections are deemed necessary to ensure supplies and services conform to prescribed requirements.

4.1.1 Responsibility for compliance. All items shall meet all requirements of sections 3 and 5. The inspection set forth in this specification shall become a part of the contractor's overall inspection system or quality program. The absence of any inspection requirements in the specification shall not relieve the contractor of the responsibility of ensuring that all products or supplies submitted to the Government for acceptance comply with all requirements of the contract. Sampling inspection, as part of the manufacturing operations, is an acceptable practice to ascertain conformance to requirements, however, this does not authorize submission of known defective material, either indicated or actual, nor does it commit the Government to accept defective material.

4.2 Classification of inspections. The inspection requirements specified herein are classified as follows:

(a) Qualification inspection (see 4.3).
(b) Quality conformance inspection (see 4.4).

4.3 Qualification inspection. In addition to successful completion of the examinations and tests specified in 4.5 and 4.6, the manufacturer shall provide long term current capacity data from a seawater immersion test of at least 4 type ASS-10 anodes of 12 months or longer duration. Minimum test site and procedure requirements are listed in the appendix. The anode current capacity calculated shall be at least 920 ampere-hours per pound (2030 ampere-hours per kilogram) for each anode tested. In addition, the free corrosion potential of each anode tested in long term seawater immersion shall be -0.98 (or more negative) volts versus saturated silver/silver chloride in seawater.

4.4 Quality conformance inspection. Quality conformance inspection shall consist of the examinations and tests specified in 4.5 and 4.6. Detection of any non conforming characteristic in any sample shall result in the rejection of the entire lot. The contractor has the option of correcting the descrepency, retesting, and resubmitting a conforming lot or submitting a new lot which shall be inspected and tested as specified herein. Resubmitted lots that fail retest shall be rejected and not resubmitted again.

4.4.1 Sampling lot. For the purpose of sampling, a lot shall consist of all anodes of the same type and style poured from one homogenous heat or melt of a single charge of raw materials. The addition of any material to the heat or melt at any time constitutes a new lot.

Downloaded from http://www.everyspec.com

4.4.2 Sampling for examination. A random sample of anodes shall be selected from each lot as specified in table II.

TABLE II. Sampling for examination.

Lot size	Sample size
3 - 25	3
26 - 50	5
51 - 90	6
91 - 150	7
151 - 280	10
281 - 500	11
501 - 1,200	15
1,201 - 3,200	18
3,201 - 10,000	22
10,000 - over	29

4.4.3 Sampling for core bonding tests. Two anodes from each lot shall be selected at random for the core bonding test.

4.4.3.1 Resampling. In cases where one of the two anodes tested fails to pass the core bond test, four additional anodes may be selected for retest at the discretion of the manufacturer.

4.4.4 Sampling for bend test for types APN anodes. At least five anodes of these types shall be selected from each lot for each of these tests.

4.4.4.1 Physical test sample dimensions for APN type anodes. APN test samples shall be cut from the plate anodes and shall be of the following dimensions: width: 2X thickness, length: 12 inches or to suit the test apparatus.

4.4.5 Sampling for chemical analysis. Two anodes shall be selected at random from each lot for chemical analysis test. Alloy sample shall be obtained by drilling or machining the alloy so that the sample represents the bulk material.

4.5 Examination. Anodes selected as specified in 4.4.2 shall be examined visually for weight, dimension, and workmanship (see 3.5.4, 3.5.5, 3.7, and 6.4.1).

4.6 Test methods.

Downloaded from http://www.everyspec.com

4.6.1 Core bonding test. Each anode selected to represent the lot shall be cut with a hacksaw or the equivalent along the major axis of each strap or core. The cut surfaces shall be polished with a 60 (or finer) mesh abrasive until the aluminum alloy-steel core/strap interface is distinctly visible. This interface shall be examined carefully at approximately 10 times magnification. The gap between the aluminum alloy and the steel strap/core shall be less than 0.002 inches (0.005 cm, 50um) for at least 50% of the interfacial length. Aluminum alloy anodes may have a bead or buttress not exceeding 1/4 inch (6.35 mm) projecting from the anode along the strap/core (see 6.4.2). The steel strap zinc alloy interface shall show no evidence of red rust, however, blue or black oxide is acceptable. Evidence of red rust on the cut surface shall be cause for rejection of the lot.

4.6.1.2 Disposition of anodes subjected to core bond tests. All sample anodes shall be discarded and not included in the delivery of material after the core bonding tests are performed.

4.6.2 Bend test. Type APN anodes shall be bent 45 degrees around a mandrel of three times the thickness of the anode being tested. The anodes shall be bent in accordance with ASTM E 290. After bending, the convex surface of the specimens shall be visually inspected for cracking (see 6.4.3).

4.6.3 Chemical analysis methods. Atomic Absorption and D.C. Plasma Spectrophotometric analyses shall be by any standard method approved by a standard issue body such as the American National Standards Institute or American Society for Testing and Materials (ASTM) (for example, ASTM E 34) and accepted by the Government.

4.6.3.1 Determination of zinc, mercury, tin, bismuth, copper, iron, cadmium, titanium, and magnesium. The percent composition of these elements in the aluminum alloy shall be determined using atomic absorption spectrophotometry (see 3.2.1 and 6.4.4).

4.6.3.2 Determination of indium, lead, boron, silicon, and aluminum. The percent composition of these elements in the aluminum alloy shall be determined by D.C. plasma spectrophotometry (see 3.2.1 and 6.4.4).

4.7 Inspection of packaging. Sample packages and the inspection packaging (of the preservation, packing and marking) for shipment and storage shall be in accordance with the requirements of section 5 and the documents specified therein.

5. PACKAGING

(The packaging requirements specified herein apply only for direct Government acquisition.)

5.1 Packaging. Packing shall be level A, B, or Commercial, as specified (see 6.2).

5.1.1 Level A. Anodes, segregated by type and size shall be packed as follows:

(a) Specified anodes shall be packed in unit pallet loads or in boxes in accordance with the following:

Downloaded from http://www.everyspec.com

(1) Pallets shall be in accordance with MIL-P-15011. The anodes shall be secured to the pallet with tension tied, coated, or galvanized steel strapping applied lengthwise and girth-wise. Minimum size of the strapping shall be 0.75 inch (19.05 mm) by 0.035 inch (0.89 mm). The gross weight of the pallet load shall not exceed 3,000 pounds (1361 kilograms (kg)).

(2) The boxes shall be in accordance with PPP-B-6011 (overseas type) or PPP-B-621, class 2. The gross weight of the box shall not exceed approximately 500 pounds (227 kg). Box closure and strapping shall be in accordance with the applicable box specification or appendix thereto. The boxes shall be modified by the addition of skids, for gross weights exceeding 200 pounds (91 kg) in accordance with the applicable box specification.

(3) The anodes shall be cushioned, blocked, and braced in accordance with MIL-STD-1186.

5.1.2 Level B. Anodes, segregated by type and size, shall be packed as follows:

(a) Specified anodes shall be packed in unit pallet loads or in boxes in accordance with the following:

(1) Pallets shall be specified as for level A.

(2) The boxes shall be in accordance with PPP-B-621, class 1, or PPP-B-601 (domestic type). The gross weight of the box shall not exceed approximately 500 pounds (227 kg). Box closure shall be in accordance with the applicable box specification or appendix thereto. The boxes shall be modified by the addition of skids, for gross weights exceeding 200 pounds (91 kg), in accordance with the applicable box specification.

5.1.3 Commerical. Packing shall be in accordance with ASTM D 3951.

5.2 Marking. In addition to any special marking required (see 6.2), shipping containers and pallet unit loads shall be marked in accordance with MIL-STD-129 for levels A and B packing. Commercial packs shall be marked in accordance with ASTM D 3951 including bar coding as required by MIL-STD-129.

6. NOTES

(This section contains information of a general or explanatory nature that may be helpful, but is not mandatory.)

6.1 Intended use. The anodes are intended for use as aluminum alloy sacrificial anodes for the cathodic protection of metals and alloys aboard U.S. Navy ships and submarines. The anodes are not intended for use in any area exposed to flammable material (such as compensating fuel tanks) or where deteriorated pieces of alloy may cause problems (such as for suction inlets).

6.2 Acquisition requirements. Acquisition documents must specify the following:

(a) Title, number, and date of this specification.

(b) Type and style anode required (see 1.2).

Downloaded from http://www.everyspec.com

(c) Issue of DoDISS to be cited in the solicitation, and if required, the specific issue of individual documents referenced (see 2.1.1 and 2.2).
(d) When stud hole elongation is allowed (see 3.5.6).
(e) Level of packing required (see 5.1).
(f) Special marking, if required (see 5.2).

6.3 Qualification. With respect to products requiring qualification, awards will be made only for products which are, at the time of award of contract, qualified for inclusion in Qualified Products List QPL No. XX342 whether or not such products have actually been so listed by that date. The attention of the contractors is called to these requirements, and manufacturers are urged to arrange to have the products that they propose to offer to the Federal Government tested for qualification in order that they may be eligible to be awarded contracts or purchase orders for the products covered by this specification. The activity responsible for the Qualified Products List is the Naval Sea Systems Command, SEA 05Q222, 2531 National Center 3, Washington, DC 20362-5160 and information pertaining to qualification of products may be obtained from that activity. Application for qualification tests must be made in accordance with "Provisions Governing Qualification SD-6" (see 6.3.1).

6.3.1 Copies of "Provisions Governing Qualification SD-6" may be obtained upon application to Standardization Documents Order Desk, Bldg. 4D, 700 Robbins Avenue, Philadelphia, PA 19111-5094.

6.4 Lot acceptance and rejection criteria.

6.4.1 Examination. Criteria is as specified in table III. If the weight of the anode is less than the minimum weight for the type of anode specified, it is cause form rejection of the entire lot (see 3.5.4). If any anode fails to meet workmanship or dimensional requirements, it is cause for rejection of the entire lot (see 4.5).

TABLE III. Examination.

Lot size	Sample size	Accept	Reject 1/
3 - 25	3	0	1
26 - 50	5	0	1
51 - 90	6	0	1
91 - 150	7	0	1
151 - 280	10	0	1
281 - 500	11	0	1
501 - 1,200	15	0	1
1,201 - 3,200	18	0	1
3,201 - 10,000	22	0	1
10,001 - over	29	0	1

6.4.2 Core bonding test. The gap between the aluminum alloy and the steel strap/core shall be less than 0.002 inches for at least 50% of the interfaced length.

6.4.3 Bend test. Any evidence of cracking is cause for rejection of the entire lot (see 4.6.2).

Downloaded from http://www.everyspec.com

6.4.4 Chemical analysis. Any deviation from the composition specified in table I is cause for rejection of the entire lot (see 4.6.3.1 and 4.6.3.2).

6.5 Subject term (key word) listing.

Cathodic protection
Hull slab
Submarine slab

Preparing activity:
Navy - SH
(Project 3426-N047)

Downloaded from http://www.everyspec.com

PLAN VIEW

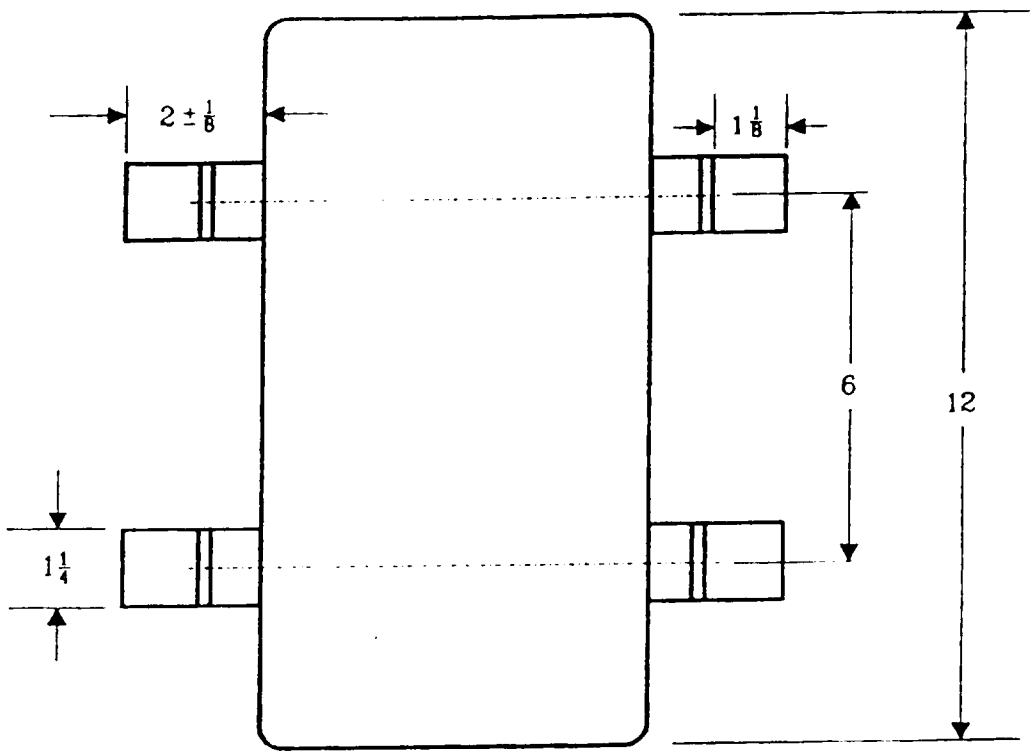

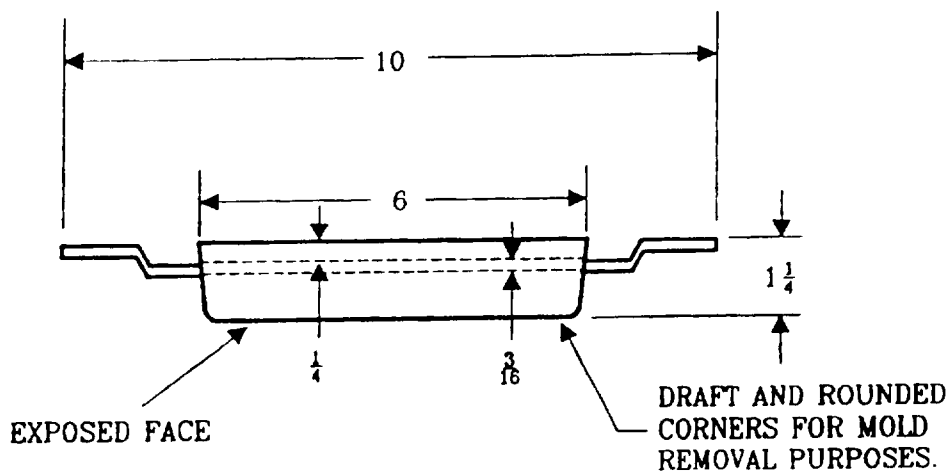

END ELEVATION

NOTES:

1. Minimum weight 8.7 lbs.
2. All dimensions (inches) refer to the wider and longer edges of the anodes.
3. Tolerances ±1/8 inch unless otherwise specified.
4. 1 inch = 2.54 cm

FIGURE 1. Aluminum hull slab (steel straps), type AHS-10

Downloaded from http://www.everyspec.com

PLAN VIEW

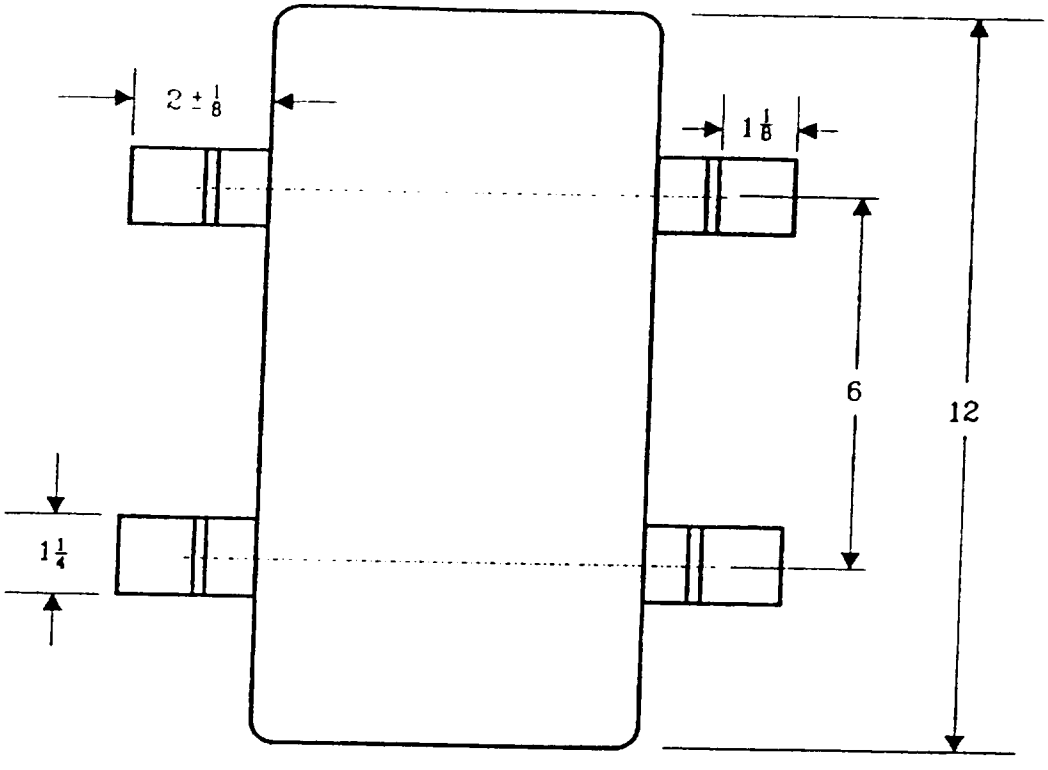

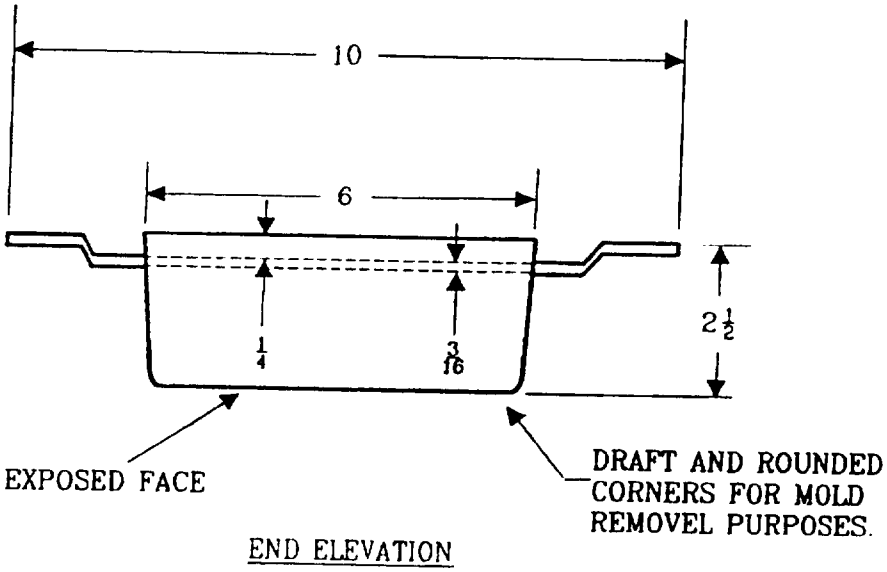

END ELEVATION

NOTES:

1. Minimum weight 16.7 lbs.
2. All dimensions (inches) refer to the wider and longer edges of the anodes.
3. Tolerances ±1/8 inch unless otherwise specified.
4. 1 inch = 2.54 cm

FIGURE 2. Aluminum hull slab (steel straps), type AHS- 20

Downloaded from http://www.everyspec.com

PLAN VIEW

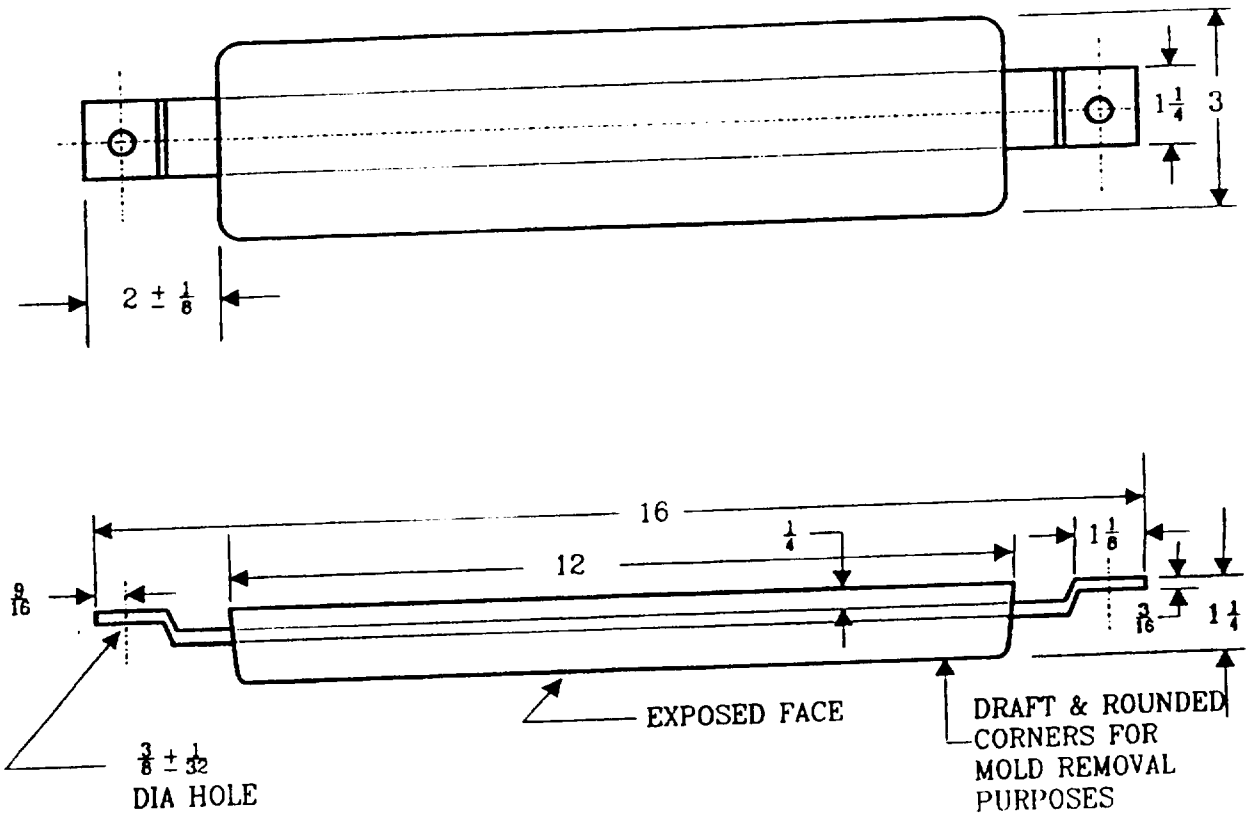

SIDE VIEW

NOTES:

1. Minimum weight 4.5 lbs.
2. All dimensions (inches) refer to the wider and longer dimensions of the anode.
3. Tolerances ± 1/8 inch unless otherwise specified.
4. Mounting holes in straps are optional and should be supplied only when specified.
5. 1 inch = 2.54 cm

FIGURE 3a. Aluminum, submarine slab (steel strap), type ASS-5

Downloaded from http://www.everyspec.com

PLAN VIEW

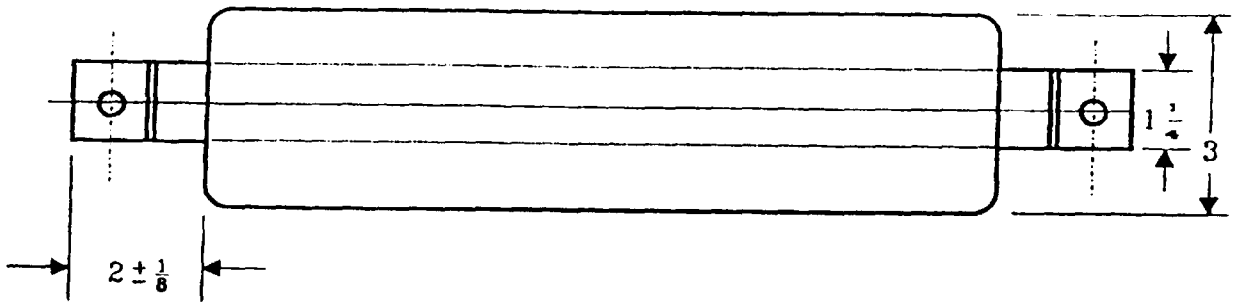

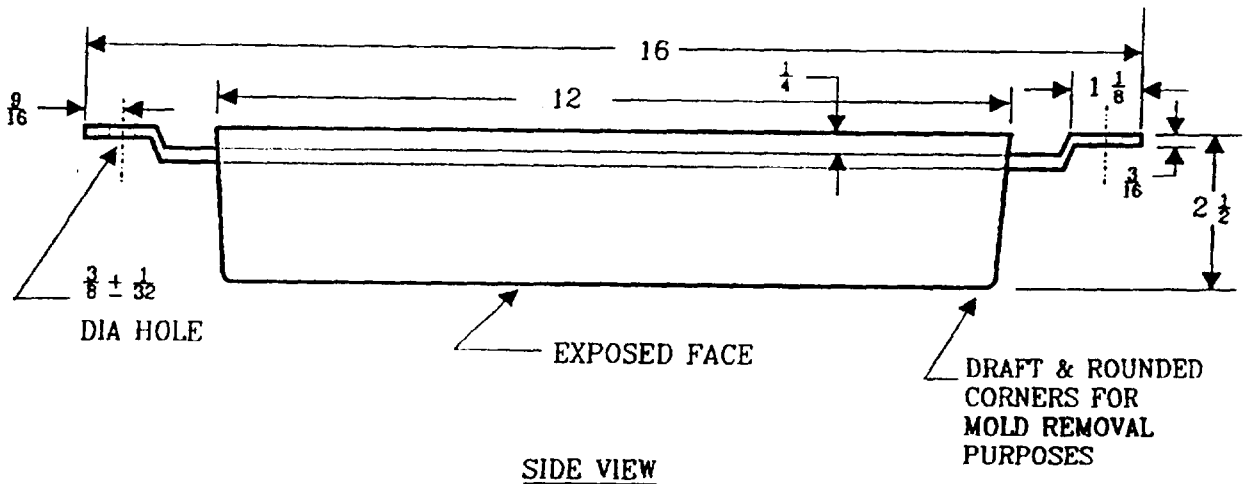

SIDE VIEW

NOTES:

1. Minimum weight 8.7 lbs.
2. All dimensions (inches) refer to the wider and longer dimensions of the anode.
3. Tolerances ± 1/8 inch unless otherwise specified.
4. Mounting holes in straps are optional and should be supplied only when specified.
5. 1 inch = 2.54 cm

FIGURE 3b. Aluminum, submarine (steel strap), type ASS-10

Downloaded from http://www.everyspec.com

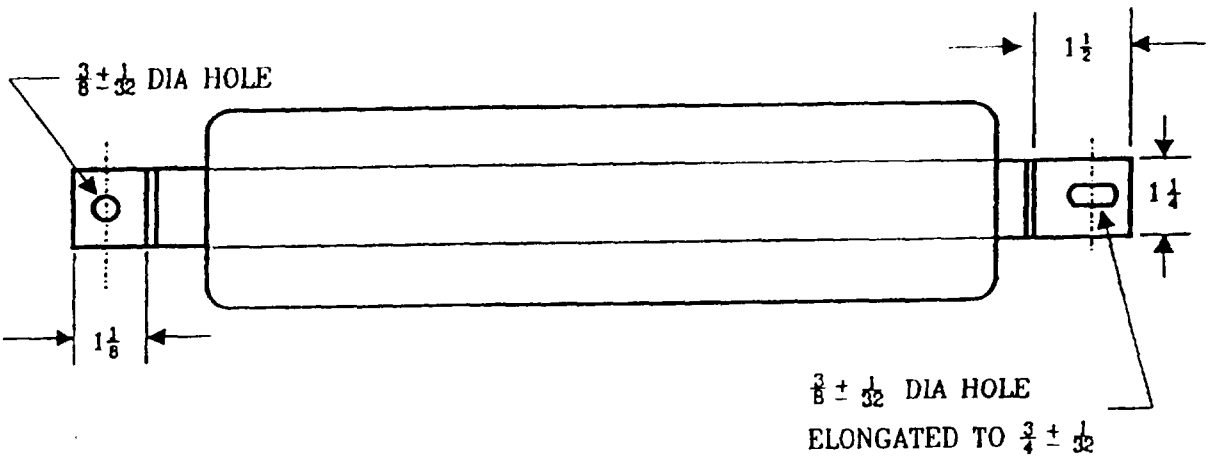

NOTES:

1. All dimensions are in inches.
2. Tolerances ± 1/8 unless otherwise specified.
3. The elongated stud hole shall be centered 3/4 inch from the strap end.
4. The overall length of the anode shall be 16-3/8 inches.
5. A minimum of 1/4 inch of steel shall surrond the bolt holes.
6. All other dimensions/weight are as shown for ASS-5 or ASS-10 as applicable.
7. 1 inch = 2.54 cm

FIGURE 3c. Aluminum, submarine slab (steel strap) with elongated stud hole.

Downloaded from http://www.everyspec.com

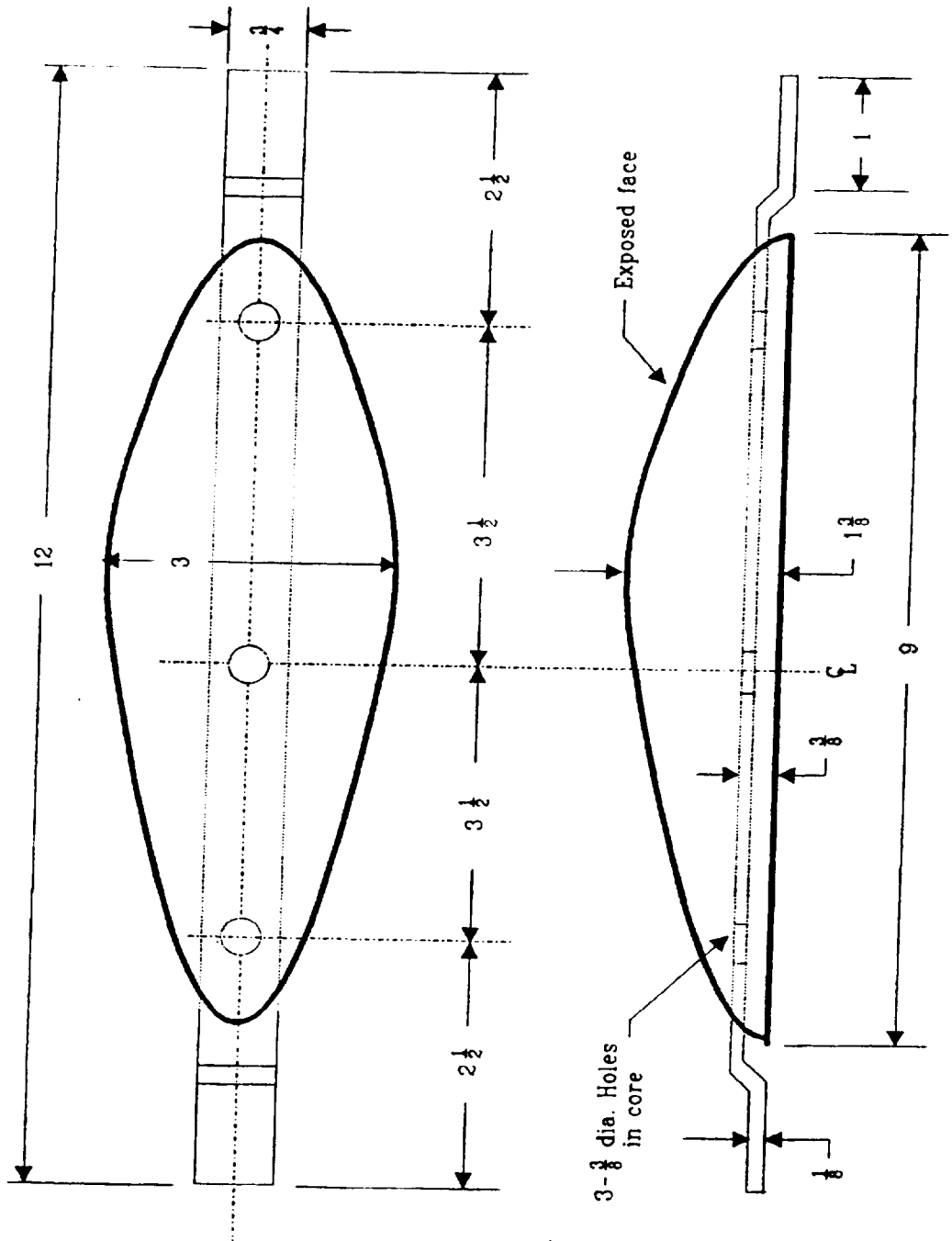

Notes:

1. Minimum weight 2.0 lbs.
2. All dimensions in inches
3. Tolerances ±1/8 unless otherwise specified.
4. 1 inch = 2.54 cm

Aluminum, teardrop (steel strap) type ATS.

Figure 4

Downloaded from http://www.everyspec.com

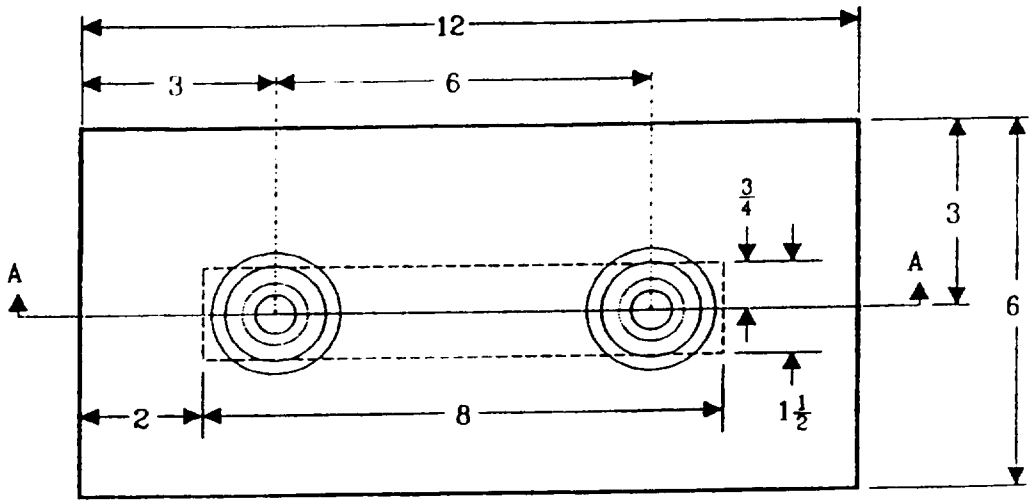

PLAN VIEW

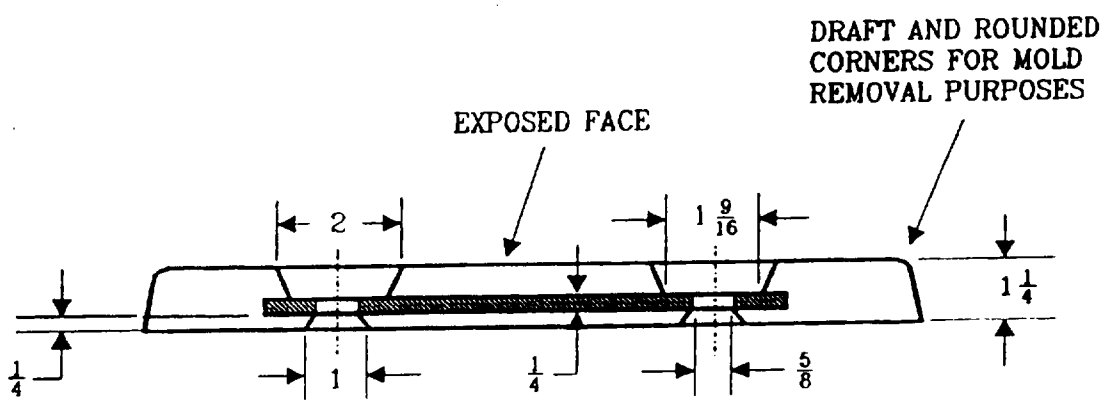

SECT AA

NOTES:

1. Minimum weight 8.7 lbs.
2. All dimensions (inches) refer to the wider and longer edges of the anodes.
3. Tolerances ±1/8 unless otherwise specified.
4. 1 inch = 2.54 cm

FIGURE 5. Aluminum hull slab (steel core), type AHC-10

Downloaded from http://www.everyspec.com

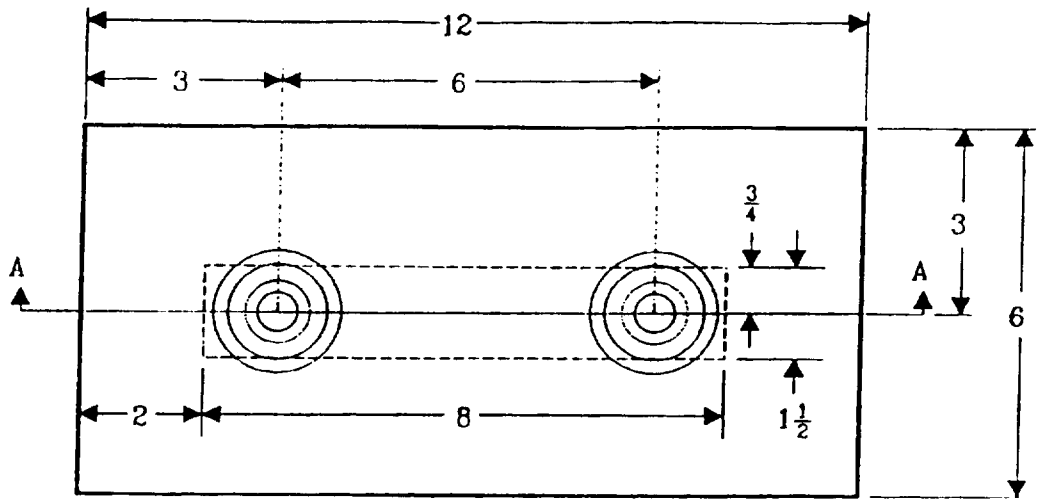

PLAN VIEW

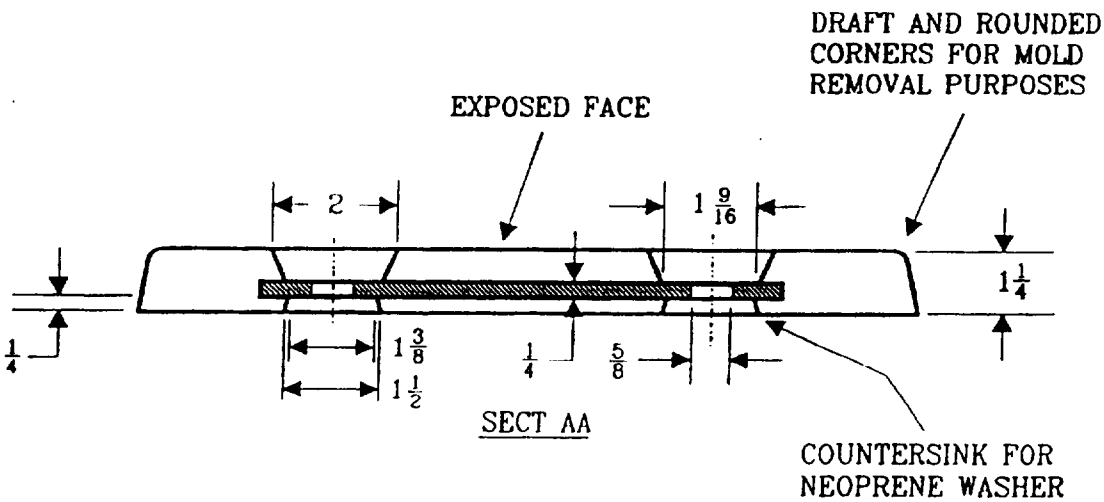

SECT AA

NOTES:

1. Minimum weight 8.7 lbs.
2. All dimensions (inches) refer to the wider and longer edges of the anodes.
3. Tolerances ± 1/8 unless otherwise specified.
4. 1 inch = 2.54 cm

FIGURE 6

Aluminum hull slab (steel core), type AHC-10 with countersink for neoprene washer.

Downloaded from http://www.everyspec.com

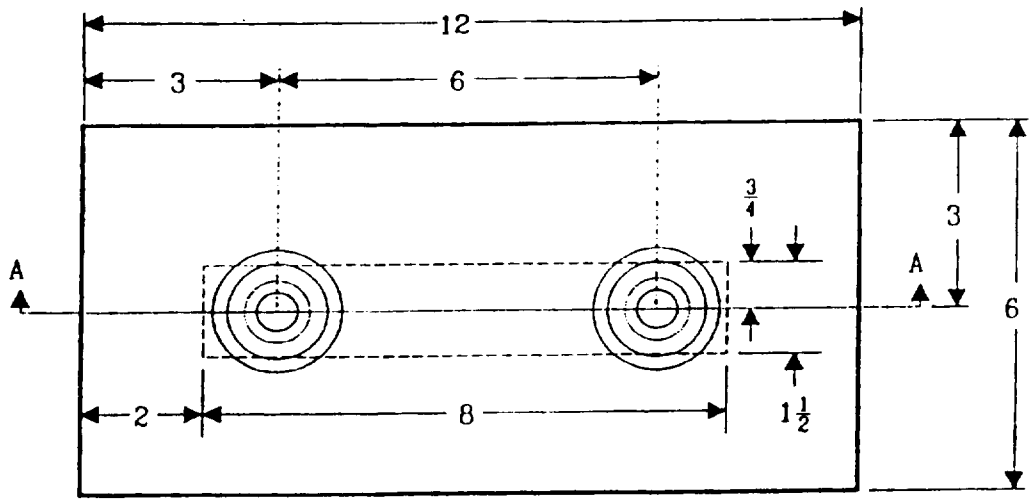

PLAN VIEW

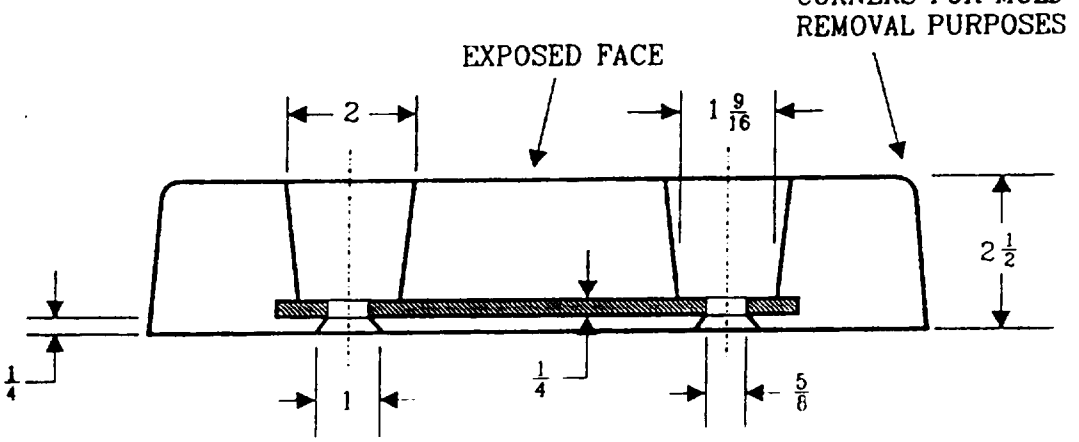

SECT AA

NOTES:

1. Minimum weight 16. lbs.
2. All dimensions (inches) refer to the wider and longer edges of the anodes.
3. Tolerances ± 1/8 unless otherwise specified.
4. 1 inch = 2.54 cm

FIGURE 7

Aluminum hull slab (steel core), type AHC-20

Downloaded from http://www.everyspec.com

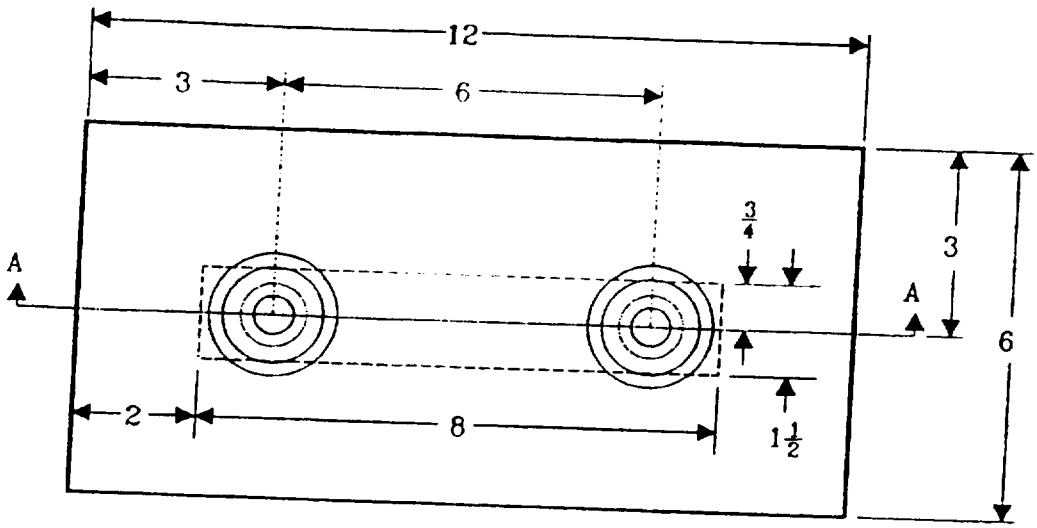

PLAN VIEW

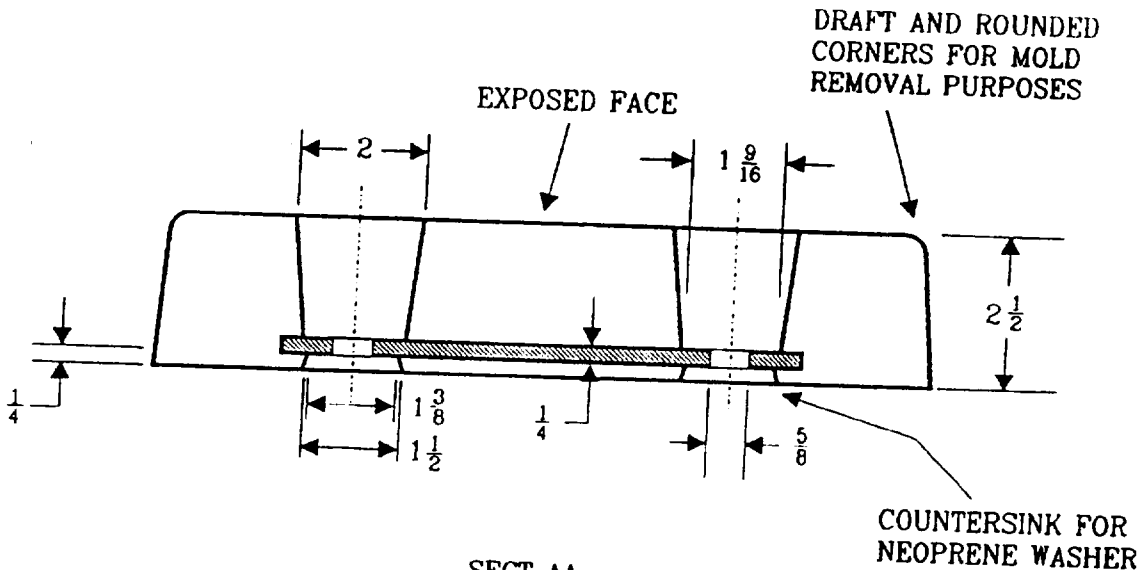

SECT AA

NOTES:

1. Minimum weight 16. lbs.
2. All dimensions (inches) refer to the wider and longer edges of the anodes.
3. Tolerances ± 1/8 unless otherwise specified.
4. 1 inch = 2.54 cm

FIGURE 8

Aluminum hull slab (steel core), type AHC-20 with countersink for neoprene washer.

Downloaded from http://www.everyspec.com

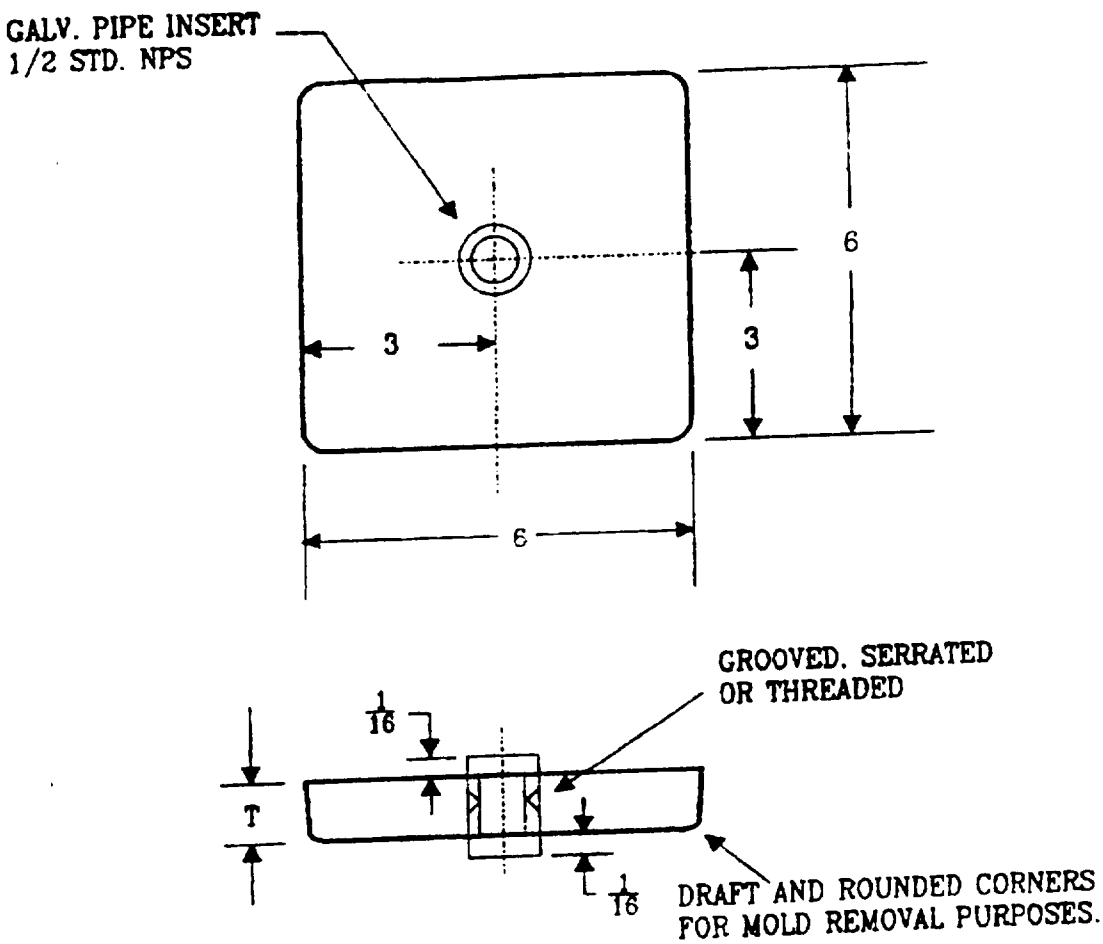

T = THICKNESS IN INCHES	APPROXIMATE WEIGHT (POUNDS)
1	3.5
2.5	8.0

NOTES:

1. All dimensions (inches) refer to the wider and longer dimensions of the anode.
2. Tolerences ±1/8 unless otherwise specified.
3. 1 inch = 2.54 cm.

FIGURE 9a.
Aluminum, heat exchanger slab, pipe core (Style A) AEP.

Downloaded from http://www.everyspec.com

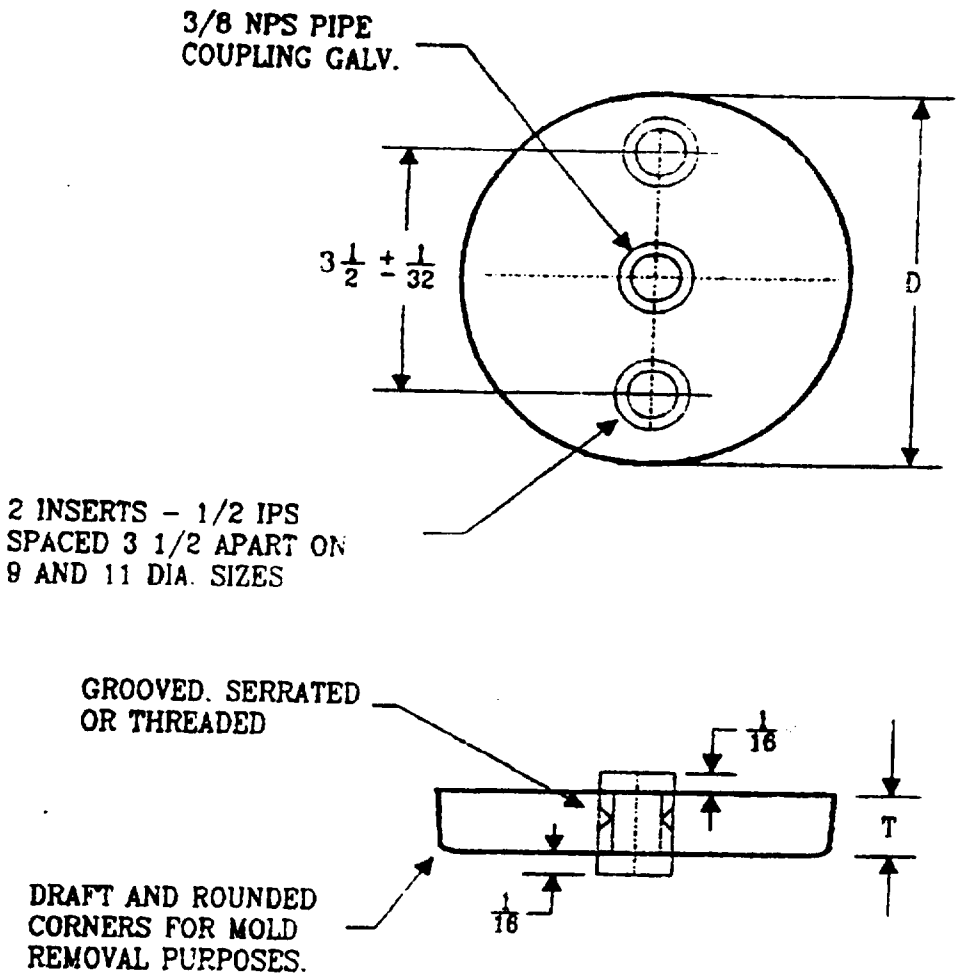

D = DIAMETER IN INCHES	APPROXIMATE WEIGHT (POUNDS) FOR T = 1	APPROXIMATE WEIGHT (POUNDS) FOR T = 2.5
11	9.4	23.0
9	6.3	15.0
6	2.8	7.0

NOTES:

1. All dimensions (inches) refer to the wider and longer dimensions of the anode.
2. Tolerences ±1/8 unless otherwise specified.
3. 1 inch = 2.54 cm.

FIGURE 9b.
Aluminum, heat exchanger slab, pipe core (Style B) AEP.

Downloaded from http://www.everyspec.com

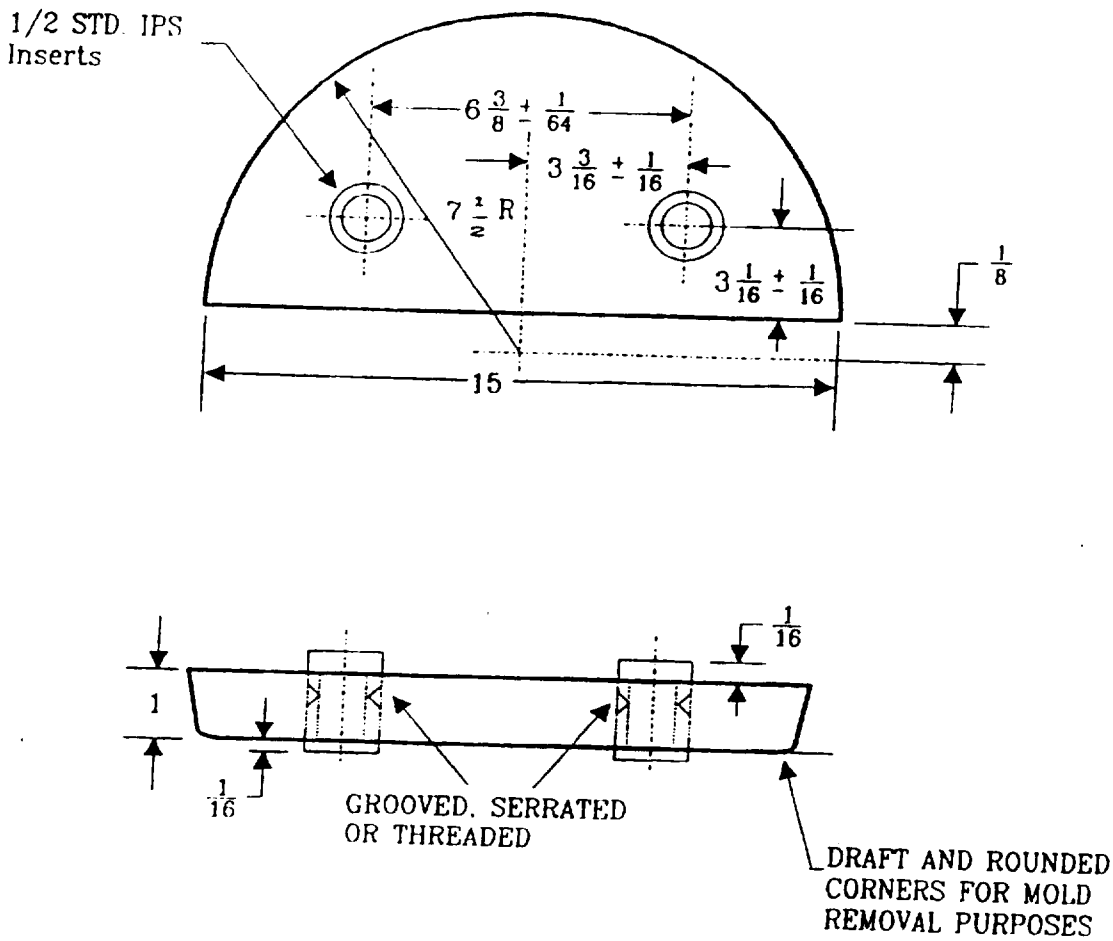

NOTES:

1. Approximate weight 8.6 lb.
2. All dimensions (inches) refer to the wider and longer dimensions of the anode.
3. Tolerences ±1/8 unless otherwise specified.
4. 1 inch = 2.54 cm.

FIGURE 9c.
Aluminum, heat exchanger slab, pipe core (Style C) AEP.

Downloaded from http://www.everyspec.com

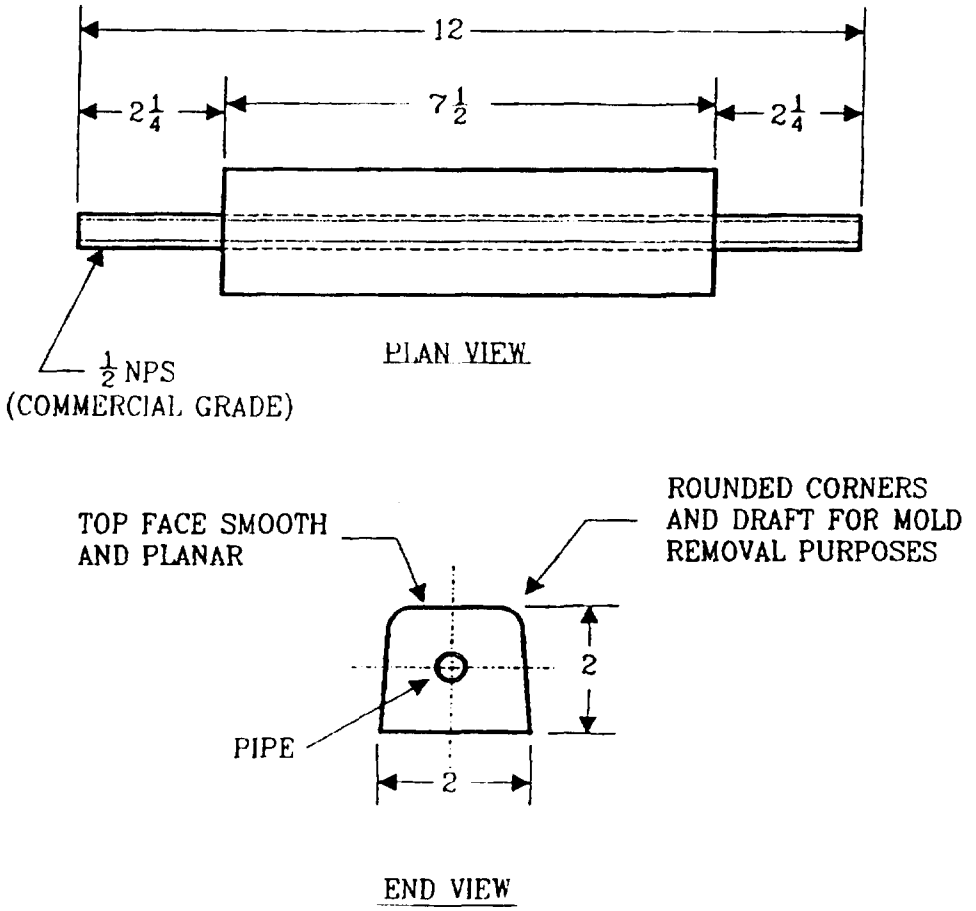

NOTES:

1. Approximate weight 3.2 lb.
2. All dimension (inches) refer to the wider and longer dimensions of the anode.
3. Tolerances ±1/8 unless otherwise specified.
4. 1 inch = 2.54 cm

FIGURE 10. Aluminum, bar (pipe core), type ABP

Downloaded from http://www.everyspec.com

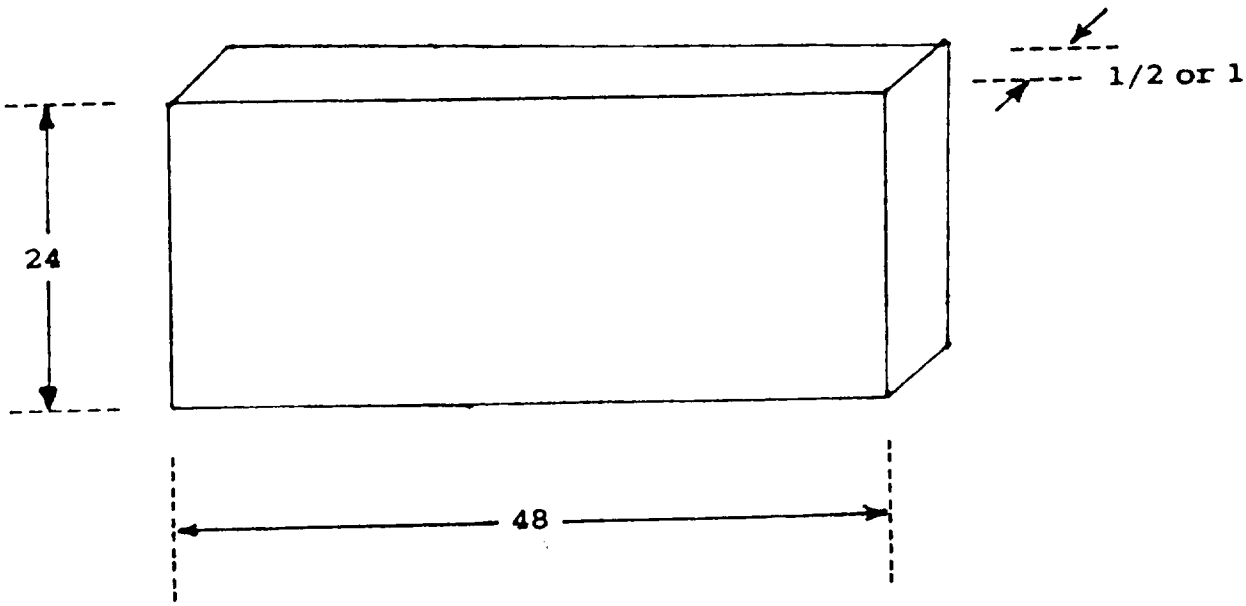

NOTES:

1. Minimum weight for 1/2-inch plate is 55 lbs.
2. Minimum weight for 1-inch plate is 110 lbs.
3. All dimensions (inches) refer to the wider and longer dimensions of the anode.
4. Tolerances ±1/8 unless otherwise specified.
5. 1 inch = 2.54 cm.

FIGURE 11. Aluminum, plate (no core), type APN.

Downloaded from http://www.everyspec.com

APPENDIX

TEST SITE AND PROCEDURE REQUIREMENTS FOR QUALIFICATION OF ALUMINUM ANODES

10. SCOPE

10.1 Scope. This appendix provides the test site requirements and test procedures for determining long term current capacity of anodes for which qualification is sought. This appendix is a mandatory part of the specification. The information contained herein is intended for compliance.

20. APPLICABLE DOCUMENTS

20.1 Government documents.

20.1.1 Specifications, standards, and handbooks. The following specifications, standards, and handbooks form a part of this document to the extent specified herein. Unless otherwise specified, the issues of these documents are those listed in the issue of the Department of Defense Index of Specifications and Standards (DODISS) and supplement thereto, cited in the solicitation (see 6.2).

MIL-A-18001 - Anodes, Corrosion Preventive, Zinc; Slab Disc and Rod Shaped.
MIL-P-24441 - Paint, Epoxy-Polyamide General Specification for.

(Unless otherwise indicated, copies of federal and military specifications, standards, and handbooks are available from the Standardization Documents Order Desk, BLDG. 4D, 700 Robbins Avenue, Philadelphia, PA 19111-5094.)

30. TEST

30.1 Test site requirements. The test site shall be on or near the ocean or an estuary thereof, providing an undiluted natural seawater environment to within a 3-foot spherical radius of each anode in test. Similarly, not less than 80 percent of the immersed portion of the "infinite steel cathode" shall be immersed in undiluted natural seawater. These requirements shall be maintained during all seasons and tidal conditions. This allows for some surface dilution from rain and river sources. The "infinite steel cathode" shall have sufficient exposed steel surface area to permit galvanic coupling of all anodes in test without significant cathodic polarization of the steel.

30.2 Test procedures. Each of four ASS-10 anodes chosen at random from a representative heat of a production run of anodes shall be galvanically coupled to an "infinite steel cathode" in seawater for a minimum period of 1 year. This test shall run concurrently with a test of at least two ZSS-24 zinc anodes in accordance with MIL-A-18001 for comparative purposes.

Downloaded from http://www.everyspec.com

The back of each anode shall be wire brushed and degreased prior to application of two to three coats of epoxy in accordance with MIL-P-24441 to a total dry film thickness of 8 to 10 mils. The anodes shall then be weighed to the nearest 0.1 pound (45.36 grams (g)) on a certified calibrated balance. The anode should be mounted to a dielectric plate of minimum dimensions the width and length of the anode to further preclude the possibility of corrosion of the back surface causing loss of the anode. Six-gauge copper wire shall be used to galvanically couple each anode through a 1-ohm shunt resistor to an infinite steel seawall. All underwater electrical connections shall be sufficiently waterproof to survive the duration of the test without loss of continuity. The shunt shall be used to monitor current weekly. Anodes shall be immersed at least 3 feet (0.91 meter (m)) below low tide level and separated from each other by a minimum distance of 8 feet (2.44 m). Individual anode current shall be measured weekly by measuring voltage drop across the 1-ohm shunt resistor to an accuracy of 0.1 millivolt (mV). Potential of the seawall shall be measured monthly at each anode site immediately adjacent to the seawall. Potential of the seawall shall not measure more negative than minus 700 mV with respect to a silver/silver-chloride reference cell at any site.

Upon conclusion of the test, electrical connections are to be removed, and each anode cleaned with a high-pressure water blast to remove fouling and corrosion products. Each anode shall again be weighed to the nearest 0.1 pound (45.36 g), and weight loss recorded.

A plot of current as a function of time is to be produced for each anode. Integrate the area under the current versus time curve to determine the total charge passed in ampere-hours. The anode current capacity for each anode shall be determined by dividing the total charge passed in ampere-hours by each anode's weight loss in pounds (or kilograms).

Downloaded from http://www.everyspec.com

STANDARDIZATION DOCUMENT IMPROVEMENT PROPOSAL

INSTRUCTIONS

1. The preparing activity must complete blocks 1, 2, 3, and 8. In block 1, both the document number and revision letter should be given.
2. The submitter of this form must complete blocks 4, 5, 6, and 7.
3. The preparing activity must provide a reply within 30 days from receipt of the form.

NOTE: This form may not be used to request copies of documents, nor to request waivers, or clarification of requirements on current contracts. Comments submitted on this form do not constitute or imply authorization to waive any portion of the referenced document(s) or to amend contractual requirements.

I RECOMMEND A CHANGE:	1. DOCUMENT NUMBER MIL-A-24779(SH)	2. DOCUMENT DATE (YYMMDD) 921215

3. DOCUMENT TITLE

4. NATURE OF CHANGE (Identify paragraph number and include proposed rewrite, if possible. Attach extra sheets as needed.)

5. REASON FOR RECOMMENDATION

6. SUBMITTER

a. NAME (Last, First, Middle Initial)	b. ORGANIZATION	
c. ADDRESS (Include Zip Code)	d. TELEPHONE (Include Area Code) (1) Commercial (2) AUTOVON (If applicable)	7. DATE SUBMITTED (YYMMDD)

8. PREPARING ACTIVITY

a. NAME TECHNICAL POINT OF CONTACT: Mr. Beau Brinckerhoff SEA 05M1	b. TELEPHONE (Include Area Code) (1) Commercial 703-602-0214	(2) AUTOVON 332-0214
c. ADDRESS (Include Zip Code) Commander, Naval Sea Systems Command SEA 05Q42, 2531 National Center 3 Washington, DC 20362-5160	IF YOU DO NOT RECEIVE A REPLY WITHIN 45 DAYS, CONTACT: Defense Quality and Standardization Office 5203 Leesburg Pike, Suite 1403, Falls Church, VA 22041-3466 Telephone (703) 756-2340 AUTOVON 289-2340	