Downloaded from http://www.everyspec.com

MIL-A-21412A(SHIPS)
4 September 1964
SUPERSEDING
MIL-A-21412(SHIPS)
22 July 1958
(See 6.6)

MILITARY SPECIFICATION

ANODES, CORROSION PREVENTIVE, MAGNESIUM ALLOY, CAST OR EXTRUDED SHAPES WITH CAST-IN CORES

1. SCOPE

1.1 Scope. - This specification covers the requirements for magnesium alloy anodes (galvanic protectors) in the form of cast or extruded shapes, including features of design, and fabrication of cast-in cores for mounting purposes.

1.2 Classification. - The anodes shall be of the following classes, types, and styles, as specified (see 6.2):

Class 1 - Insulated faying surfaces, cast-in cores.
- Type MHP-135A - Magnesium, hull anode (pipe core), 135 pounds.
  - Style A - (Square ends) (see figure 1).
- Type MHP-135B - Magnesium, hull anode (pipe core), 135 pounds.
  - Style B - (Single bevel) (see figure 1).
- Type MHP-135C - Magnesium, hull anode (pipe core), 135 pounds.
  - Style C - (Double bevel) (see figure 1).
- Type MHB-135A - Magnesium, hull anode (bolt core), 135 pounds.
  - Style A - (Square ends) (see figure 2).
- Type MHB-135B - Magnesium, hull anode (bolt core), 135 pounds.
  - Style B (Single bevel) (see figure 2).
- Type MHB-135C - Magnesium, hull anode (bolt core), 135 pounds.
  - Style C - (Double bevel) (see figure 2).

Class 2 - Bare anodes, cast-in cores.
- Type MOP-50 - Magnesium, outrigger anode (pipe core), 50 pounds. (square or "D" section) (see figure 3).
- Type MOB-50 - Magnesium, outrigger anode (eyebolt core), 50 pounds (round or square section) (see figure 4).
- Type MTS-42D - Magnesium, tanker anode (strap core), 42 pounds.
  - Style D - (Strap bracket, straight ends) (see figure 5).
- Type MTS-42E - Magnesium, tanker anode (strap core), 42 pounds.
  - Style E - (Strap bracket, bent ends) (see figure 5).
- Type MTS-52E - Magnesium, tanker anode (strap core), 52 pounds.
  - Style E - (Strap bracket, bent ends) (see figure 6).
- Type MTS-52F - Magnesium, tanker anode (strap core), 52 pounds.
  - Style F - (Axial strap) (see figure 6).
- Type MTS-53 - Magnesium, tanker anode (strap core), 53 pounds (see figure 7).
- Type MTS-70 - Magnesium, tanker anode (strap core), 70 pounds (see figure 8).
- Type MTC-450 - Magnesium, tanker anode (channel core), 450 pounds (see figure 9).
- Type MRW-1.5f - Magnesium, rod anode (wire core), 1.5 lbs./ft. (see figure 10).
- Type MRW-2.5f - Magnesium, rod anode (wire core), 2.5 lbs./ft. (see figure 10).
- Type MSW-0.23f - Magnesium, strip anode (wire core), 0.23 lb./ft. (see figure 11).

Downloaded from http://www.everyspec.com

1.3 Key to symbols. - The letter designation of types and styles of anodes have the following meaning:

First letter	M -(magnesium alloy)	Designates anode metal
Second letter	H - (hull anode) O - (outrigger anode) T - (tanker anode) R - (rod anode) S - (strip anode)	Designates use or shape
Third letter	P - (pipe core) B - (bolt core) S - (strap core) C - (channel core) W - (wire core)	Designates core
Number or number and small letter "f"	135 - (135 pounds) 50 - (50 pounds) 52 - (52 pounds) 53 - (53 pounds) 70 - (70 pounds) 450 - (450 pounds) 1.5f - (1.5 pounds/ft.) 2.5f - (2.5 pounds/ft.) 0.23f - (0.23 pound/ft.)	Designates approximate weight
Last letter	A - (square ends) B - (single bevel) C - (double bevel) D - (strap bracket, straight ends) E - (strap bracket, bent ends) F - (axial strap)	Designates style

2. APPLICABLE DOCUMENTS

2.1 The following documents of the issue in effect on date of invitation for bids or request for proposal, form a part of the specification to the extent specified herein.

SPECIFICATION

FEDERAL
SS-R-406 - Road and Paving Materials; Methods of Sampling and Testing.

STANDARD

MILITARY
MIL-STD-105 - Sampling Procedures and Tables for Inspection by Attributes.

(Copies of specifications, standards, drawings, and publications required by suppliers in connection with specific procurement functions should be obtained from the procuring agency or as directed by the contracting officer.)

2.2 Other publications. - The following documents form a part of this specification to the extent specified herein. Unless otherwise indicated, the issue in effect on date of invitation for bids or request for proposal shall apply.

OFFICIAL CLASSIFICATION COMMITTEE
Uniform Freight Classification Rules.

Downloaded from http://www.everyspec.com

(Application for copies should be addressed to the Official Classification Committee, 1 Park Avenue, at 33rd Street, New York 16, N. Y.)

AMERICAN SOCIETY FOR TESTING AND MATERIALS
E35-60T - Methods for Chemical Analysis of Magnesium and Magnesium-base Alloys.

(Application for copies should be addressed to the American Society for Testing and Materials, 1916 Race St., Philadelphia 3, Pennsylvania.)

3. REQUIREMENTS

3.1 Materials. -

3.1.1 Magnesium. - The anodes shall be manufactured conforming to the composition specified in table I as determined by spectrographic and analytical procedures.

Table I - Chemical composition, magnesium alloy anodes (galvanic protectors).

Aluminum (range)	Zinc (range)	Manganese (minimum)	Silicon (maximum)	Copper (maximum)	Iron (maximum)	Nickel (maximum)	Other (maximum)	Magnesium
Percent	Percent	Percent	Percent	Percent	Percent	Percent	Percent	Percent
5.0 - 7.0	2.0 - 4.0	0.15	0.3	0.1	0.003	0.003	0.3	Remainder

3.1.2 Core inserts. - Strap, pipe, bolt, channel and wire core inserts shall be made from commercial hot dipped galvanized steel.

3.1.3 Asphalt insulating blanket. - Types MHP-135 and MHB-135 magnesium alloy anodes shall have a 1/4 inch nominal thickness (as measured 1 inch from any edge) asphalt insulating blanket cast on the faying surface which has previously been coated with an asphalt primer. The asphalt primer shall wet the anode faying surface thoroughly and form a firm bond between the metal and the asphalt enamel. The asphalt enamel shall have a softening point of 210 - 230°F. and a penetration of 0.13 to 0.23 centimeter (cm) at 25°C. (77°F.), with 100 grams for 5 seconds when tested in accordance with method 216.0 and 214.01 respectively of SS-R-406.

3.2 Manufacture. -

3.2.1 Hull, outrigger, and tanker anodes. - Types MHP-135, MHB-135, MOP-50, MOB-50, MTS-42, MTS-52, MTS-53, MTS-70, MTC-450 anodes shall be manufactured by any suitable casting process. Open or closed molds may be used.

3.2.2 Rod and strip anodes. - Types MRW-1.5f, MRW-2.5f and MSW-0.23f anodes shall be manufactured by any suitable casting, rolling or extruding process.

3.3 Dimensions. - Types MHP-135, MHB-135, MOP-50, MOB-50, MTS-42, MTS-52, MTS-53, MTS-70 MTC-450, MRW-1.5f, MRW-2.5f and MSW-0.23f, magnesium alloy anodes shall conform to the dimensions and tolerances shown on figures 1 to 11, inclusive. Unless otherwise specified herein, nominal tolerances of plus or minus 1/8 inch will be permitted on all dimensions delineating the geometry of the anode. For all other dimensions delineating the position and geometry of the cast-in cores and position and diameter of mounting holes a tolerance of plus or minus 1/32 inch will be permitted.

3.4 Geometry. - Unless otherwise specified in the contract or order, the cross section shape of the anode may be round or square or usual mold modification thereof. Types MOP-50 and MOB-50 may be furnished in any style shown on figures 3 and 4 unless ordered to a specific style (see 6.2).

3.5 Weight. - The permissible variation in weight of each finished magnesium anode shall be plus or minus 2.5 percent the average weight shown on figures 1 to 11.

Downloaded from http://www.everyspec.com

3.6 Marking of anodes. -

3.6.1 "DO NOT PAINT". - Types MHP-135 and MHB-135 magnesium alloy anodes shall have the words, "DO NOT PAINT" die-stamped or cast on the exposed face (see figures 1 and 2). No marking will be required for types MOP-50, MOB-50, MTS-42, MTS-52, MTS-53, MTS-70, MTC-450 MRW-1.5f, MRW-2.5f and MSW-0.23f anodes.

3.6.2 Manufacturer's symbol. - A manufacturer's identifying symbol shall be cast or die-stamped on at least one surface (other than faying surface) of each magnesium alloy anode except types MRW-1.5f, MRW-2.5f and MSW-0.23f.

3.7 Workmanship. -

3.7.1 Magnesium. - The anodes shall be free from flash burrs, cracks, blow holes, pipes and surface slag consistent with good commercial practice. The cast anodes shall not have shrinkage cavities exceeding 3/8 inch in depth when measured from a straight edge placed diagonally across the opposite edges of the anode and, in addition, surface irregularities exceeding 1/8 inch in depth or height measured from the anode surface shall not be permitted. Types MRW-1.5f, MRW-2.5f and MSW-0.23f anodes shall be smooth on their curve surfaces.

3.7.2 Metal cores. - Metal core inserts protruding from the anodes shall be smooth and free of sharp burrs.

3.7.3 Types MHP-135 and MHB-135 anodes. - The pipe core inserts protruding from types MHP-135 and MHP-135 anodes shall be aligned within the anode so that the protruding edges of pipe cores lie within a plane parallel to the top surface of the anode. The asphalt blanket shall be applied to the bottom (faying) surface in a manner which will fill all shrinkage cavities and surface irregularities and still provide an overall thickness as specified in 3.1.3. The protruding pipe cores shall extend beyond the surface of asphalt blanket not more than 1/16 inch and not less than 1/32 inch. The asphalt blanket shall be parallel to the plane of the protruding edges of the pipe core.

4. QUALITY ASSURANCE PROVISIONS

4.1 Responsibility for inspection. - Unless otherwise specified in the contract or purchase order, the supplier is responsible for the performance of all inspection requirements as specified herein. Except as otherwise specified, the supplier may utilize his own facilities or any commercial laboratory acceptable to the Government. The Government reserves the right to perform any of the inspections set forth in the specification where such inspections are deemed necessary to assure supplies and services conform to prescribed requirements.

4.2 Sampling. -

4.2.1 Lot. - Unless otherwise specified in the contract or order, a lot shall consist of not more than 20,000 pounds of magnesium alloy anodes from a single melt or not more than 5,000 pounds from the production cast in a single 24-hour period from more than one melt and of the same type, class, and style, offered for inspection at one time.

4.2.2 Sampling for examination. - Sample anodes shall be selected from each lot in accordance with inspection level I of MIL-STD-105. Class 1 anodes shall be examined prior to and after the application of the insulating asphalt blanket. The Acceptable Quality Level shall be 2.5 percent for all visual and dimensional defects combined. This same AQL shall be applied to the weights of the sample anodes.

4.2.2.1 Additional sampling for class 1 anodes. - Uncoated class 1 anodes, sampled in accordance with 4.2.2, shall be returned to the lot. After coating the anodes with the required insulating asphalt blanket a dimensional and workmanship check on asphalt thickness shall be made on other sample anodes selected in accordance with 4.2.2.

4.2.3 Sampling for chemical analysis. - Five anodes shall be selected at random from each lot specified in 4.2.1. From each of the required anodes, one 2-ounce sample shall be taken by drilling or machining the material at the locations specified in 4.2.3.1 to 4.2.3.4, inclusive. The drilling or machining shall be done by the supplier. The drill or tool bit shall not penetrate the core material. The drilled or machined anodes may be included in delivery.

Downloaded from http://www.everyspec.com

4.2.3.1 Types MHP-135, MHB-135, MTS-42, MTS-52E, and MTS-70 anodes shall be drilled on either end with a drill penetration not to exceed 3 inches.

4.2.3.2 Types MOP-50, MOB-50, MTS-52F, MTS-53 and MTC-450 shall be drilled on either end at points midway between core and edges with a drill penetration not to exceed 5 inches.

4.2.3.3 Types MRW-1.5f, MRW-2.5f and MSW-0.23f shall have 1/2 pound minimum section cut from the ends of a nominal length and drilled midway between the outer surface and the axial core.

4.2.3.4 The samples specified in 4.2.3 shall be taken by drilling or machining the anodes specified in 4.2.3.1 and 4.2.3.2 as follows: Discard the first 1/4 inch depth of sampling chips. Penetrate the anode to a depth of 2-1/2 inches in sufficient locations to collect the required weight of sample. For types MRW-1.5f, MRW-2.5f and MSW-0.23f, drill completely through the anodes. The samples shall be collected in clean containers and properly labeled as to lot, melt, and sample numbers. If the melt of each lot cannot be identified, four times the number of anodes shall be sampled as above. Samples shall be clean, free from dirt, oil, grit or other foreign matter. The details of a method for sampling anodes for chemical analysis is contained in 6.5.

4.2.4 Sampling for asphalt physical tests. - The anodes selected in accordance with 4.2.3 shall be used for taking asphalt samples. From each anode, 1 inch wide, transverse strips of asphalt shall be chipped from the faying surface of class 1 anodes by means of a hammer and chisel. The asphalt chips taken from each anode shall be collected separately in clean envelopes and properly labeled as to lot and sample number. The chipped asphalt coated anodes may be included in delivery provided that all asphalt surfaces are repaired to the original condition.

4.3 Visual and dimensional examination. - Each anode selected in accordance with 4.2.2 shall be examined for workmanship and dimensions. Where the number of anodes that do not conform to 3.3, 3.4, 3.5, 3.6 and 3.7 exceed the acceptance number specified in 4.2.2, this shall be cause for rejection of the entire lot.

4.3.1 Examination of class 1 anodes. - The asphalt insulating blanket of each anode selected in accordance with 4.2.2.1 shall be examined for workmanship and dimensions. The thickness of the asphalt blanket shall be measured by inserting a heated calibrated slightly blunted ice pick or other suitable instrument perpendicular to the asphalt surface measured 1 inch diagonally from any corner of the anode. The measuring instrument shall make firm contact with the anode faying surface prior to recording the readings. If the depth reading on the anode is less than 1/4 inch, the anode sample shall be designated as nonconforming. Where the number of anodes that do not conform to 4.3 and 3.1.3 exceed the acceptance number specified in 4.2.2, this shall be cause for rejection of the entire lot.

4.4 Tests. - Tests shall be performed as follows:

4.4.1 Chemical analysis. - The chips selected in accordance with 4.2.3 shall be analyzed to determine conformance with 3.1.1. The composition of the magnesium anodes shall be analyzed by spectrographic techniques and shall use the analytical procedures specified in 4.4.1.1 through 4.4.1.7 for determination of trace elements where conformation is necessary. In the event of a dispute, the wet chemistry techniques specified shall be used as a basis for acceptance. If any sample does not conform to the chemical composition specified in table I, this shall be cause for rejection of the lot represented by the sample. A strong magnet shall be used to remove any iron contamination picked up during the preparation of the chips. The chips shall be washed in an iron-free degreasing solvent prior to analysis.

4.4.1.1 Determination of manganese (persulfate photometric method). -

4.4.1.1.1 Reagents. - The reagents shall be as follows:

(a) Standard manganese solution. - Dissolve 3.076 grams of $MnSO_4.H_2O$ in distilled water in a 1-liter volumetric flask. Add 5 mℓ. of dilute sulfuric acid (1:4) and dilute to mark. Transfer a 100-mℓ. aliquot to another 1-liter volumetric flask and dilute to mark. One mℓ. of this solution contains 0.1 milligram of manganese.

(b) Mixed acids. - Carefully add while stirring 100 mℓ. of sulfuric acid (sp. gr. 1.84) to 525 mℓ. of distilled water in which 2.5 grams of silver nitrate has already been dissolved. Cool, and add 125 mℓ. of phosphoric acid (85 percent) and 250 mℓ. of nitric acid (sp. gr. 1.42).

Downloaded from http://www.everyspec.com

(c) Ammonium persulfate solution (25 percent). - Dissolve 250 grams of $(NH_4)_2S_2O_8$ in distilled water and dilute to 1 liter. This solution should be prepared fresh daily.

4.4.1.1.2 Apparatus. - Photoelectric photometer with absorption cell of 1-cm. light path and filter giving maximum transmission at approximately 550 millimicrons shall be used.

4.4.1.1.3 Preparation of calibrating curve. - The calibration curve shall be prepared by transferring 2.5, 5, 10, 15, 20, and 30 mℓ. of standard manganese solution to 300 mℓ. Erlenmeyer flasks and proceeding through all the steps of the sample procedure starting with the addition of 30 mℓ. of mixed acids. Plot the photometric readings against corresponding percentages of manganese based on a 0.5 gram sample.

Special precautions. - Distilled water should be used for making up all reagents and for dilutions and rinsings. A high-grade purity water can be obtained by running ordinary distilled water through any of the available demineralizer cartridges, collecting that portion which shows a total inorganic impurity of less than 0.1 p.p.m. as NaCℓ. All glassware should be cleaned with hot hydrochloric acid and thoroughly rinsed with the distilled water.

4.4.1.1.4 Procedure. - Weigh 0.50 gram of sample and transfer to a 300-mℓ. Erlenmeyer flask containing 25 mℓ. of distilled water. Dissolve the metal by adding 30 mℓ. of the mixed acids in small portions. Dilute to about 150 mℓ. heat to boiling and add 10 mℓ. of ammonium persulfate solution (25 percent). Boil briskly for 1 to 1.5 minutes. Cool to room temperature, transfer to a 250-mℓ. volumetric flask and dilute to mark. Transfer a portion of the solution to an absorption cell and read at approximately 550 millimicrons in a photometer adjusted to the initial setting with distilled water. From the value obtained determine the percent of manganese present in the sample by reference to the calibration curve.

4.4.1.2 Determination of silicon (molybdisilicic acid photometric method). -

4.4.1.2.1 Reagents. - The reagents shall be as follows:

(a) Standard silicate solution. - Fuse 0.1070 gram of pure anhydrous silicon (SiO_2) with 1.0 gram of sodium carbonate in a platinum crucible, dissolve in distilled water, and dilute to one liter in a volumetric flask. One mℓ. of this solution contains 0.05 milligram of silicon.
(b) Boric acid solution. - Saturate distilled water with H_3BO_3 at room temperature and filter.
(c) Bromine water. - Dissolve enough bromine in water to give a definite yellow color.
(d) Dilute sulfuric acid (1:4). - Carefully pour 50 mℓ. of H_2SO_4 (sp. gr. 1.84) into 200 mℓ. of distilled water. Prepare fresh as needed.
(e) Ammonium molybdate solution. - Dissolve 40 grams of $(NH_4)_6Mo_7O_{24}.4H_2O$ in 500 mℓ. of distilled water.

4.4.1.2.2 Apparatus. - Photoelectric photometer with absorption cell of 2-, 4- or 5-cm. light path and filter giving maximum transmission at approximately 420 millimicrons shall be used.

4.4.1.2.3 Preparation of calibration curve. - Transfer 0, 2, 4, 6, 8, and 10 mℓ. of standard silicate solution to 100-mℓ. volumetric flasks. To each flask add 40 mℓ. of distilled water, 1 mℓ. of dilute sulfuric acid (1:4) and 5 grams of magnesium sulfate ($MgSO_4.7H_2O$). When the magnesium sulfate has dissolved, add 5 mℓ. of ammonium molybdate solution, dilute to mark and mix. Read at approximately 420 millimicrons in a photometer adjusted to the initial setting with distilled water. Subtract the blank (0 mℓ.) from each photometric reading and plot the differences against corresponding percentages of silicon based on a 0.5 gram sample.

4.4.1.2.4 Procedure. - A blank on reagents and filter paper shall be run simultaneously with the sample determinations. Only 1 mℓ. of dilute sulfuric acid (1:4) per 100 mℓ. of solution shall be used in the blank determination. Weigh 0.50 gram of sample and transfer to a 150-mℓ. beaker. Add 25 mℓ. of bromine water and 5 mℓ. of boric acid solution. Place beaker in ice water, cool, dissolve the sample by adding 5.8 mℓ. of dilute sulfuric acid (1:4) in small portions and then 1 mℓ. in excess. Keep the beaker meanwhile in ice water to prevent losses of silicon as hydride. When the sample is dissolved, add about 0.1 gram of potassium persulfate. Allow to stand 10 minutes or longer. Dilute to about 60 mℓ. with distilled water and filter through a retentive low-ash paper, collecting the filtrate in a 100-mℓ. volumetric flask. Rinse the beaker and paper with distilled water until the filtrate measures about 90 mℓ. Reserve the filtrate. Place the filter paper in a clean platinum crucible, burn off at about 500°C., add 0.1 gram of sodium carbonate and fuse at about 850°C. Dissolve the residue with enough dilute sulfuric acid (1:4) to neutralize the sodium

Downloaded from http://www.everyspec.com

carbonate (about 0.3 mℓ.) and add 1 mℓ. in excess. Dilute with water and filter into another 100 mℓ. volumetric flask. Rinse crucible and paper with enough distilled water to dilute the filtrate to approximately 90 mℓ. To each of the flasks, containing the reserved filtrate and the filtrate from the sodium carbonate fusion, add 5 mℓ. of ammonium molybdate solution. Dilute to mark with distilled water and mix well. Allow to stand for 5 minutes then transfer a portion of each solution to an absorption cell and read at approximately 420 millimicrons in a photometer adjusted to the initial setting with distilled water. Deduct the respective blank readings from the sample readings. Determine the percent of silicon in each solution from the corrected reading by reference to the calibration curve. The sum of the values obtained represent the percent of silicon in the sample.

4.4.1.3 Determination of copper (hydrobromic acid-phosphoric acid photometric method).-

4.4.1.3.1 Reagents.- The reagents shall be as follows:

(a) Standard copper solution.- Dissolve 0.2000 gram of pure copper in 15 mℓ. of hydrobromic acid containing 1 mℓ. of bromine and dilute to 250 mℓ. in a volumetric flask. Transfer a 25-mℓ. aliquot to a 1-liter volumetric flask and dilute to mark. One mℓ. of this solution contains 0.02 milligram of copper.
(b) Hydrobromic acid-bromine solution.- Add one drop of bromine to 250 mℓ. of HBr and mix.
(c) Bromine water (saturated).-

4.4.1.3.2 Apparatus.- Photoelectric photometer with absorption cell of 1-cm. light path and filter giving maximum transmission at approximately 600 millimicrons shall be used.

4.4.1.3.3 Preparation of calibration curve.- Transfer 0, 5, 10 and 25-mℓ. of standard copper solution to 100-mℓ. beakers. Place 10 mℓ. of distilled water in the beaker containing no solution (blank). Then to each of the beakers add 3 mℓ. of $HBr-Br_2$ solution and a few drops of bromine water. Evaporate the contents of each beaker to 3 mℓ., or slightly less, and cool. Add 3 mℓ. of $HBr-Br_2$ solution plus exactly 10 mℓ. of phosphoric acid (85 percent) and pour into a 25-mℓ. glass-stoppered volumetric flask. Rinse the beaker with small portions of $HBr-Br_2$ solution and transfer the rinsings to the flask. Dilute to the mark with $HBr-Br_2$ solution and mix well. Transfer a portion of each solution to a dry absorption cell and read at approximately 600 millimicrons in a photometer adjusted to the initial setting with the blank solution. If the photometer has an exposed photocell, the photocell may be protected from HBr vapors by inserting next to it a water-filled absorption cell. Plot the values obtained against corresponding percentages of copper based on a 0.5 gram sample.

4.4.1.3.4 Procedure.- A blank on reagents shall be run simultaneously with the sample determinations. Weigh 0.50 gram of sample and transfer to a 100-mℓ. beaker containing 25 mℓ. of distilled water. Dissolve the sample by adding 5 mℓ. of $HBr-Br_2$ solution in small portions, plus an excess of 3 mℓ. Warm to dissolve all the metal, adding a little bromine water if necessary. Cool, transfer to a 50-mℓ. volumetric flask, dilute to the mark, and mix. Pipette a 25-mℓ. aliquot into a 100-mℓ. beaker, add enough bromine water to produce a yellow color, and evaporate to 3 mℓ. or slightly less. Add 3 mℓ. of $HBr-Br_2$ solution and exactly 10 mℓ. of phosphoric acid (85 percent) and warm to dissolve all soluble salts. Cool, pour the mixture into a 25-mℓ. glass-stoppered volumetric flask and continue as in the calibration curve procedure. From the photometric value obtained, determine the percent of copper present in the sample by reference to the calibration curve.

4.4.1.4 Determination of iron (2, 2' bipyridine photometric method).-

4.4.1.4.1 Reagents.- The reagents shall be as follows:

(a) Standard iron solution.- Dissolve 0.1000 gram of standardizing iron wire in 50 mℓ. of dilute hydrochloric acid (1:1) and dilute to exactly 1 liter. (NBS standard sample 55b ingot iron is satisfactory.) Transfer a 25-mℓ. aliquot to a 500-mℓ. volumetric flask and dilute to mark. One mℓ. of this solution contains 0.005 milligram of iron.
(b) Hydrochloric acid (1N).- Dilute 83 mℓ. of HCl (sp. gr. 1.19) to 1 liter.
(c) 2, 2' bipyridine solution (1 percent).- Dissolve 1.0 gram of 2, 2' bipyridine (a, a' bipyridyl) in 10 mℓ. of 1N hydrochloric acid and 90 mℓ. of distilled water.
(d) Sodium sulfate solution (10 percent).- Dissolve 10 grams of anydrous Na_2SO_3 in distilled water and dilute to 100 mℓ. Prepare a fresh solution every 3 days.

Downloaded from http://www.everyspec.com

4.4.1.4.2 Apparatus. - Photoelectric photometer with absorption cell of 4- or 5-cm. light path and filter giving maximum transmission at approximately 520 millimicrons shall be used.

4.4.1.4.3 Preparation of calibration curve. - The calibration curve is prepared by transferring 0, 0.5, 1, 2, 3, 4, 6, and 8 mℓ. of standard iron solution to 150-mℓ. beakers, evaporating to dryness, and proceeding through all the steps of the sample procedure starting with the addition of 2 mℓ. of 1N hydrochloric acid. Subtract the blank from each photometric reading and plot the differences against corresponding percentages of iron based on a 0.5 gram sample.

4.4.1.4.4 Procedure. - A blank on reagents shall be run simultaneously with the sample determinations. Weigh 2.0 grams of sample and transfer to a 250-mℓ. beaker containing 50 mℓ. of distilled water. Dissolve by gradually adding 20 mℓ. of hydrochloric acid (sp. gr. 1.19) and boil the solution after all the magnesium has dissolved. Cool, transfer to a 100-mℓ. volumetric flask, dilute to mark and mix well. Transfer a 25-mℓ. aliquot to a 150-mℓ. beaker and carefully evaporate to approximately 10 mℓ. on a hot plate. Transfer the beaker to a steam bath and continue evaporating the solution just to dryness. Cool the beaker, add 2 mℓ. of 1N hydrochloric acid and swirl until all salts have dissolved. Add 10 to 15 mℓ. of water, 2 mℓ. of 2,2' bipyridine solution (1 percent) and 1 mℓ. of sodium sulfite solution (10 percent). Swirl and allow to stand for 2 minutes. Add 2 mℓ. more of sulfite solution and mix well. Transfer the solution to a 50-mℓ. volumetric flask, dilute to the mark with distilled water and mix, (if the solution is turbid, filter through a good quality filter paper). Transfer a portion of the colored solution to an absorption cell and read at approximately 520 millimicrons in a photometer adjusted to the initial setting with distilled water. Deduct the reading obtained for the blank and determine the percent of iron present in the sample by reference to the calibration curve.

4.4.1.5 Determination of nickel (dimethylglyoxime extraction (photometric) method). -

4.4.1.5.1 Reagents. - The reagents shall be as follows:

(a) Standard nickel solution. - Dissolve 0.1000 gram of pure nickel by warming with 5 mℓ. of hydrochloric acid (sp. gr. 1.19), 2 mℓ. of nitric acid (sp. gr. 1.42), and 3 mℓ. of distilled water in a covered 150-mℓ. beaker. Cool the solution to room temperature, transfer to a 1-liter volumetric flask, dilute to the mark and mix well. Transfer a 25-mℓ. aliquot to a 500-mℓ. volumetric flask and dilute to the mark. One mℓ. of this solution contains 0.005 milligram of nickel.

(b) Sodium citrate solution (10 percent). - Dissolve 100 grams of $Na_3C_6H_5O_7 \cdot 2H_2O$ in distilled water and dilute to 1 liter.

(c) Hydroxylamine hydrochloride solution (5 percent). - Dissolve 5 grams of $NH_2OH.HCl$ in distilled water and dilute to 100 mℓ. Prepare fresh as needed.

(d) Dimethylglyoxime solution (1 percent). - Dissolve 1 gram of dimethylglyoxime in 100 mℓ. of ethyl alcohol (95 percent).

(e) Iodine solution (0.1N). - Dissolve 12.7 grams of iodine and 25 grams of potassium iodide in distilled water and dilute to 1 liter.

4.4.1.5.2 Apparatus. - Photolectric photometer with absorption cell of 4- or 5-cm. light path and filter giving maximum transmission at approximately 530 millimicrons shall be used.

4.4.1.5.3 Preparation of calibration curve. - Place 5 mℓ. of distilled water and 2 mℓ. of nitric acid (sp. gr. 1.42) in each of six 200-mℓ. separatory funnels. Transfer 0, 1, 2, 4, 6, and 8 mℓ. of standard nickel solution to the funnels. Add 15 mℓ. of sodium citrate solution (10 percent) and 5 mℓ. of hydroxylamine hydrochloride solution (5 percent) to each funnel and mix. Place a piece of red litmus paper in each solution and add ammonium hydroxide (sp. gr. 0.90) dropwise until neutral, plus a few drops in excess. Introduce 3 mℓ. of dimethylglyoxime solution (1 percent) by means of a pipette, mix, and allow the solution to stand for at least 5 minutes. Extract with three 10-mℓ. portions of chloroform, shaking 1/2 minute for each extraction, and draw off the chloroform layers into a clean separatory funnel. Wash the chloroform with 25 mℓ. of dilute ammonium hydroxide (2:98) for 1/2 minute and drain the chloroform layer into a clean separatory funnel. Extract the ammoniacal layer with two 2-mℓ. portions of chloroform and combine these with the main portion containing the nickel. Shake the combined chloroform solutions for 1 minute successively with a 25-mℓ. and a 15-mℓ. portion of dilute hydrochloric acid (1:20). Discard the final chloroform layer and combine the acid layers in a 100-mℓ. volumetric flask. Add 5 drops of iodine solution (0.1N) to the flask and mix. Add dilute ammonium hydroxide (1:1) dropwise until the iodine color has disappeared and then 3 or 4 drops in excess. Add from a burette 0.5 mℓ. of dimethylglyoxime

Downloaded from http://www.everyspec.com

solution (1 percent), dilute to the mark with distilled water and mix. Allow to stand for just 10 minutes, then immediately transfer a portion of the solution to an absorption cell and read at approximately 530 millimicrons in a photometer adjusted to the initial setting with distilled water. Subtract the blank (0 mℓ.) from each photometric reading and plot the differences against corresponding percentages of nickel based on a 1 gram sample.

4.4.1.5.4 Procedure. - A blank on reagents shall be run simultaneously with the sample determinations. Weigh 1.00 gram of sample and transfer to a 250-mℓ. beaker containing 40 mℓ. of distilled water. Dissolve the metal by adding 10 mℓ. of hydrochloric acid (sp. gr. 1.19) and 2 mℓ. of nitric acid (sp. gr. 1.42) in small portions. Cool the solution and transfer to a 200-mℓ. separatory funnel, keeping the volume below 60 mℓ. Add 15 mℓ. of sodium citrate solution (10 percent) 5 mℓ. hydroxylamine hydrochloride solution (5 percent) and mix. Place a piece of red litmus paper in the solution and continue as directed in the procedure for the preparation of the calibration curve. Deduct the reading obtained for the blank and determine the percent of nickel present in the sample by reference to the calibration curve.

4.4.1.6 Determination of aluminum (sodium hydroxide method). - The aluminum content of the magnesium alloy shall be determined by the sodium hydroxide (potentiometric) method in accordance with ASTM E35-60T.

4.4.1.7 Determination of zinc (EDTA method). - The zinc content of the magnesium alloy shall be determined by the ethylenediamine tetraacetate (volumetric) method in accordance with ASTM E35-60T.

4.4.2 Asphalt physical tests. - The asphalt chips selected in accordance with 4.2.4 shall be analyzed to determine conformance with 3.1.3. If any asphalt sample or group of samples do not conform to the physical requirements of 3.1.3 using the test methods specified, this shall be cause for rejection of the lot represented by the sample.

5. PREPARATION FOR DELIVERY

5.1 Domestic shipment and early equipment installation. -

5.1.1 Packing. - Packing shall be accomplished in a manner which will insure acceptance by common carrier and will afford protection against physical or mechanical damage during direct shipment from the supply source to the using activity for early installation. The shipping containers or method of packing shall conform to the Uniform Freight Classification Rules and Regulations or other carrier regulations as applicable to the mode of transportation.

5.1.2 Marking. - Shipment marking information shall be provided on interior packages and exterior shipping containers in accordance with the contractor's commercial practice. The information shall include nomenclature, Federal stock number or manufacturer's part number, contract or order number, contractor's name and destination.

5.2 Domestic shipment and storage or overseas shipment. - The requirements and levels of packing and marking for shipment shall be specified by the procuring activity (see 6.2).

(5.2.1 The following provides various levels of protection during domestic shipment and storage or overseas shipment, which may be required when procurement is made.

5.2.1.1 Packing. -

5.2.1.1.1 Level A. - Anodes, segregated for type and size, shall be packed in unit pallet loads in accordance with MIL-STD-147 or in overseas type boxes conforming to PPP-B-591, PPP-B-621, PPP-B-585, PPP-B-576 or PPP-B-601. The gross weight of the box shall not exceed approximately 200 pounds unless the individual anode exceeds that weight. Boxes exceeding 250 pounds gross weight shall be modified by the addition of 2 by 4 inch skids.

5.2.1.1.1.1 Type MSW-023f (wire coil) shall be secured at three points, to prevent uncoiling, before placing in box.

5.2.1.1.2 Level B. - Anodes, segregated for type and size, shall be packed as specified in 5.2.1.1.1 and 5.2.1.1.1.1 except that boxes shall be of domestic type.

Downloaded from http://www.everyspec.com

5.2.1.1.3 Level C. - The anodes shall be packed to insure carrier acceptance and safe arrival at destination. Containers shall comply with the Uniform Freight Classification Rules or other carrier regulations applicable to the mode of transportation.

5.2.1.1.4 The anodes shall be cushioned, blocked and braced in accordance with MIL-STD-1186.

5.2.1.4 Marking. - In addition to any special marking required, interior packages and exterior shipping containers shall be marked in accordance with Standard MIL-STD-129.)

6. NOTES

6.1 Intended use. - Magnesium alloy anodes are primarily intended for use in corrosion protection in sea water or underwater surfaces of ships, vented ballast tanks of oilers, piers and dock structures, and other underwater metallic structures. Galvanized steel structures may be protected. The anodes are intended to be coupled to the structure under protection by means of direct attachment or the use of low resistance wire leads. Where anodes are mounted on a structure (faying) a dielectric shield is recommended. For maximum efficiency, the anodes should be coupled directly, but in certain instances where paint damage is to be avoided or where alkali sensitive metals such as lead, aluminum, or zinc are to be protected a resistance coupling should be specified. A sharp decrease in efficiency will result under controlled current output, if current output of the anode is restricted to 50 milliamperes per square foot of anode surface or less.

6.1.1 Properties of magnesium anodes. - Table II lists the useful electrochemical characteristics of magnesium alloy anodes.

Table II - Properties (approximate).

Solution or anode potential (Ag-AgC1 - volts)	1.5
Driving potential to a polarized steel cathode, -0.9 volt (Ag-AgC1 - volts)	0.6
Actual current output - ampere hours per pound at 50 percent efficiency	500
Actual anode consumption - pounds per ampere year at 50 percent efficiency	17
Density, pounds per cubic inch	0.063

6.1.2 Current output characteristics of anodes. - Table III lists approximate current output of specified anodes.

Table III - Current output from magnesium anodes (approximate) driving volts: 0.6 v.

Type anode	Current output - amperes for 30 ohm-cm. sea water (average value for open ocean)			
	Single anode	Tandem	5-foot-spacing	10-foot-spa ing
MHP-135 MHB-135	5.5	3.7	4.6	5.0
MOP-50 MOB-50	3.4	2.3	2.8	3.1
MTS-42	6.2	4.7	5.1	5.6
MTS-52	4.5	3.0	3.8	4.1
MTS-70	5.7	3.8	4.8	5.1
MTC-450	11.5	7.7	9.5	10.5
	Current output amperes per foot - 30 ohm-cm. sea water			
MRW-1.5f	0.8			
MRW-2.5f	1.1			
MSW-0.23f	0.5			

Downloaded from http://www.everyspec.com

6.1.3 For mounting of types MHP-135 and MHB-135 anodes on ship hulls refer to Bureau of Ships Hull Type Plan Numbers 805-1749052 and 805-1749053. For general information on use of anodes for cathodic protection of active ships refer to Bureau of Ships Technical Manual Chapter 9190. These shapes have been designed to give two years service at rated current output.

6.1.4 Types MOP-50 and MOB-50 anodes are intended for cathodic protection of stationary equipment submerged in sea water. The anodes are mounted on wire rope cable and suspended from the structure under protection. These anodes find their greatest utility for protection of piers, docks, certain reserve fleet ships, floating drydocks, nets, buoys and associated equipment.

6.1.5 Types MTS-42, MTS-52, MTS-53, MTS-70 and MTC-450 anodes are intended for use mainly in the internal protection of vented cargo and ballast tanks of ships. The specific shape selected depends on the geometric configuration of the tanks under consideration. (Caution. - These anodes should not be used in closed tanks unless suitable venting procedures have been followed as specified by the bureau or agency concerned. HYDROGEN gas is formed by local reaction of magnesium and water or by the cathodic reaction at the protected metal surface. This gas build up can rupture the tank or cause explosive mixtures therein. Venting arrangements which do not permit hydrogen-air ratios exceeding 3 percent at all levels of filling are strongly recommended.)

6.1.6 Types MRW-1.5f and MRW-2.5f anodes are intended for use mainly in the protection of hot water heaters. Type MSW-0.23f anode is used for the production of high current densities for short periods of time for the purpose of polarizing a complex structure rapidly so that overall cathodic protection requirements for maintaining polarization can be reduced considerably. Another use for such an anode material is for the rapid electrolytic descaling of rust from cargo or ballast tanks of a tanker in order to reduce at a later date scale contamination of the cargo from the cathodic protection process.

6.2 Ordering data. - Procurement documents should specify the following:

(a) Title, number, and date of this specification.
(b) Class, type and style (see 1.2).
(c) Specify particular shape (that is, square, round or "D"), for types MOP-50 and MOB-50 anodes, if technical requirement so dictates (see 3.4).
(d) Specify other pipe sizes for MOB-50 anodes where required (available in 1 inch i.p.s. with protruding ends, threaded or unthreaded).
(e) Packing or marking requirements other than those required by paragraph 5.1 (see 5.2).

6.3 The unit of purchase shall be the pound since a 5 percent variation in weight (manufacturing tolerance) is permitted. Unit of issue should be each.

6.4 General. - When the material is offered in the form of "slabs", "rods", "strips", "bars", "cylinders", it is to be understood that these terms merely refer to the general form of the material and do not have any technical significance as to methods of manufacture.

6.5 Sampling procedure. -

6.5.1 Drilling procedure. - The drillings for chemical analysis should be made with a special tungsten-carbide drill in a clean specific location used only for that purpose. The drilling bits should be kept clean of dirt, grit, and other foreign matter, should be kept properly sharpened and should be used only for sampling purposes. After each use, the drilling bit should be immersed in a degreasing solvent and wiped dry with a clean rag. The drilling bits when not in use should be stored in a corrosion inhibited lubricating oil. The inhibited lubricating oil should be kept in a covered glass container provided with an air vent. The drilling bits should be solvent cleaned and wiped dry with a clean rag prior to use. Samples should be taken with a dry drill. If automatic power drilling equipment is available, a solid tungsten-carbide or "Tantung" twist drill about 1/2 inch in diameter is suitable. (This drill may be procured from Ace Drill Corporation, Adrian, Michigan.) Where a hand-held power drill is used, the samples should be taken by drilling with a solid tungsten-carbide or "Tantung" twist drill about 1/4 inch in diameter. A smaller drill may be used where the size of the anode does not permit using the specified drill diameter. The drills may be used at high speeds and feeds.

Downloaded from http://www.everyspec.com

6.5.2 Machining procedure. - The chips for chemical analysis may be made with a special tungsten-carbide tool in a place which has been cleaned for that specific purpose. Instructions of 6.5.1 apply to the use and care of this tool.

6.6 CHANGES FROM PREVIOUS ISSUE. THE EXTENT OF CHANGES (DELETIONS, ADDITIONS, ETC.) PRECLUDE THE ANNOTATION OF THE INDIVIDUAL CHANGES FROM THE PREVIOUS ISSUE OF THIS DOCUMENT.

Preparing activity:
Navy - SH
(Project 5340-N090Sh)

Downloaded from http://www.everyspec.com

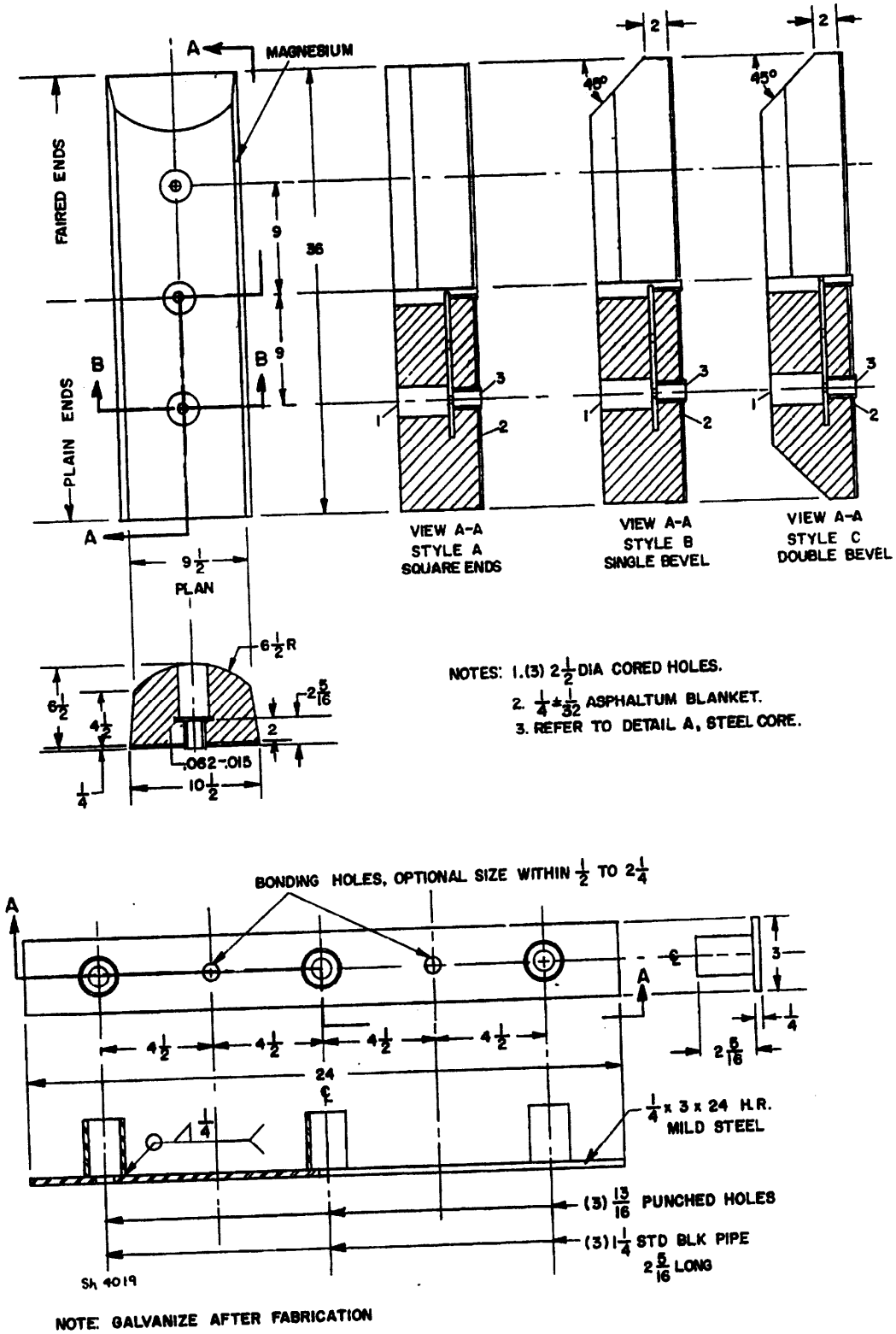

Figure 1 - Class 1, type MHP-135 magnesium hull anode (pipe core).

Downloaded from http://www.everyspec.com

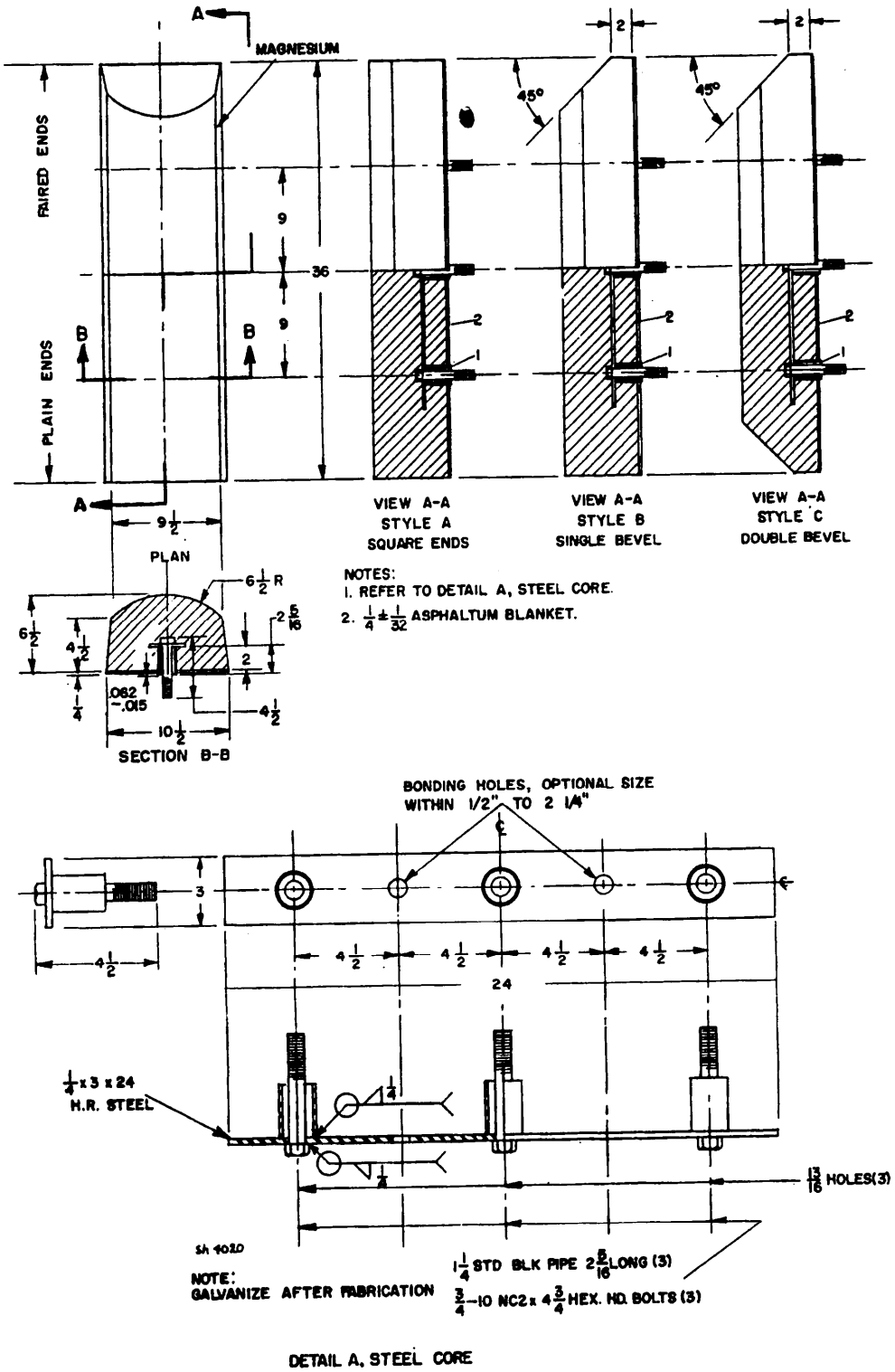

Figure 2 - Class 1, type MHB-135 magnesium hull anode (bolt core).

Downloaded from http://www.everyspec.com

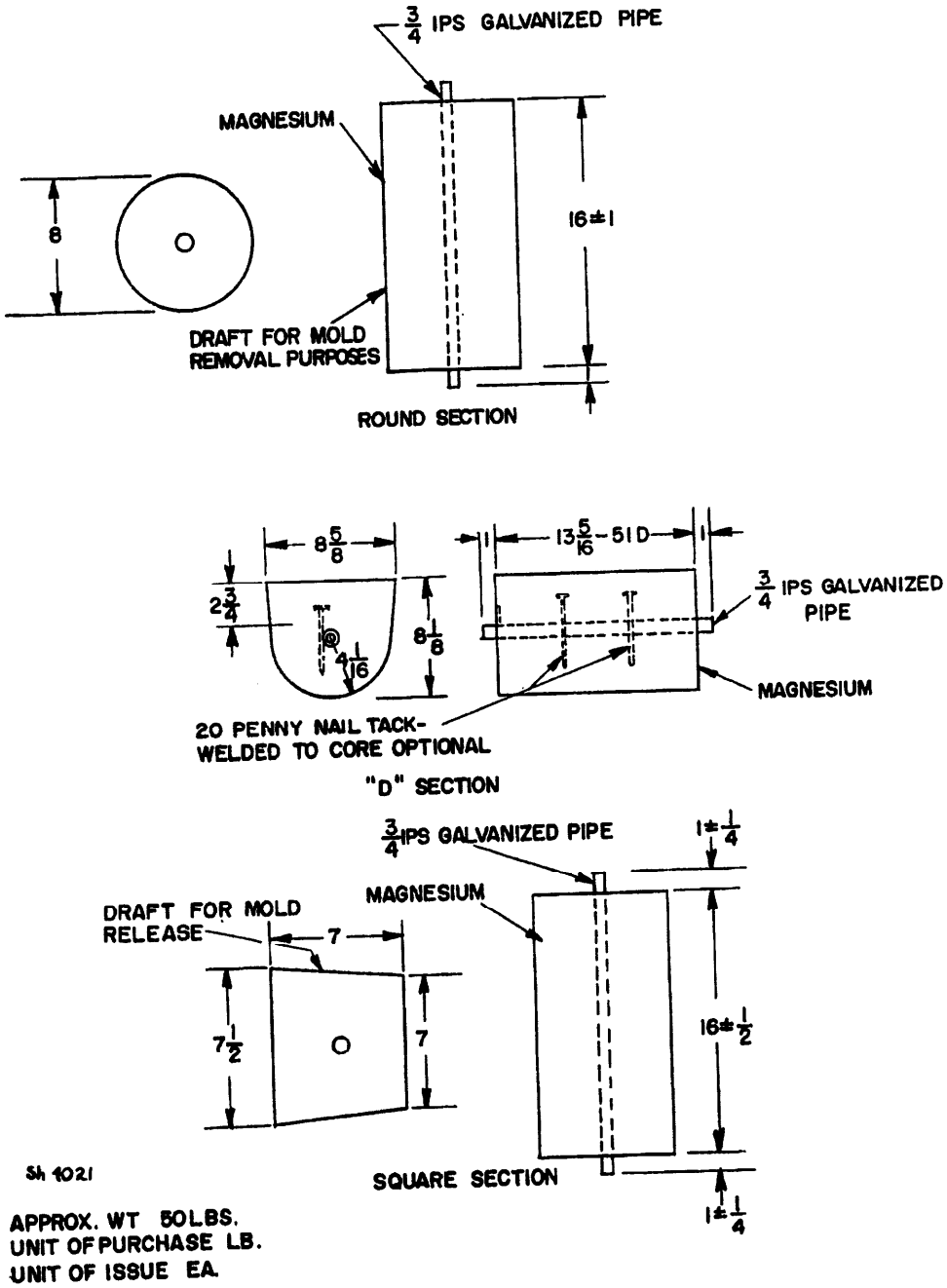

Figure 3 - Class 2, type MOP-50 magnesium outrigger anode (pipe core).

Downloaded from http://www.everyspec.com

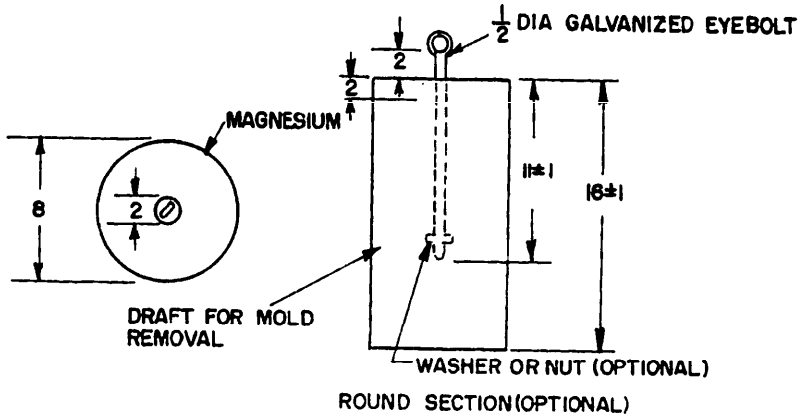

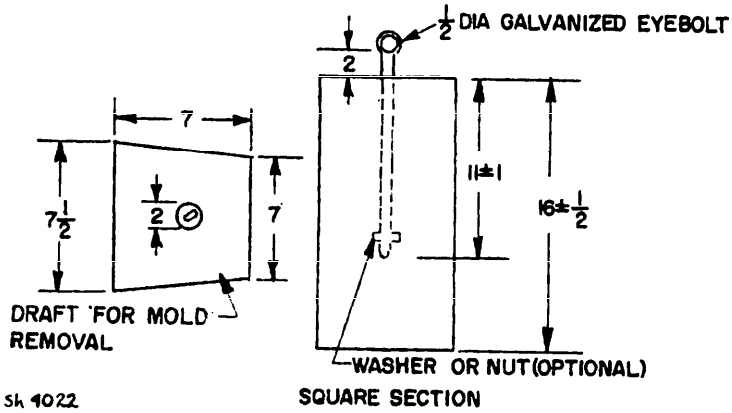

Sk 4022

APPROX. WT. -50 LBS
UNIT OF PURCHASE LB.
UNIT OF ISSUE EA

Figure 4 - Class 2, type MOB-50 magnesium outrigger anode (eyebolt core).

Downloaded from http://www.everyspec.com

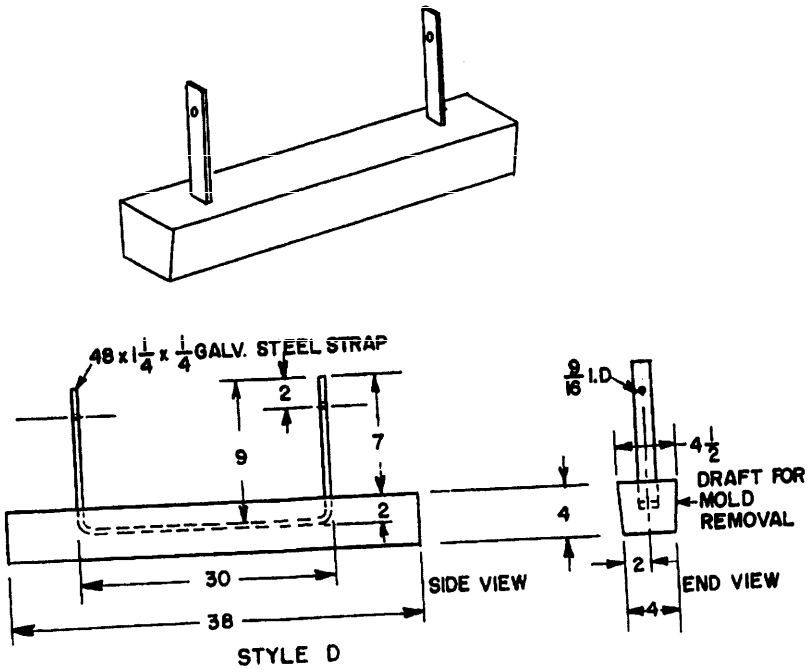

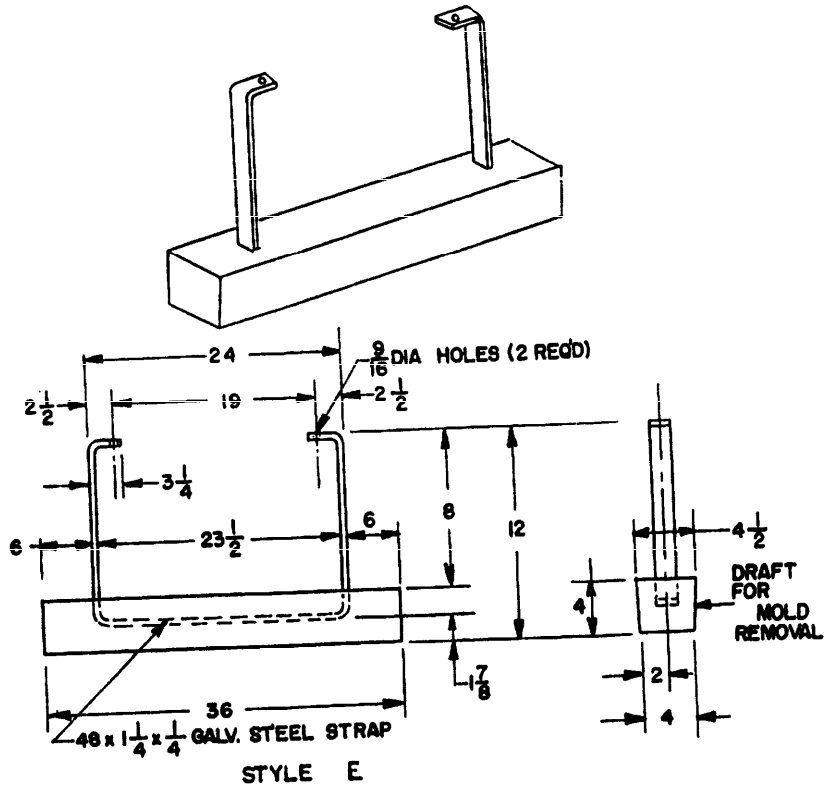

SH 4023

APPROX. WT. 42 LBS.
UNIT OF PURCHASE LB.
UNIT OF ISSUE EA.

Figure 5 - Class 2, type MTS-42 magnesium tanker anode (strap core).

Downloaded from http://www.everyspec.com

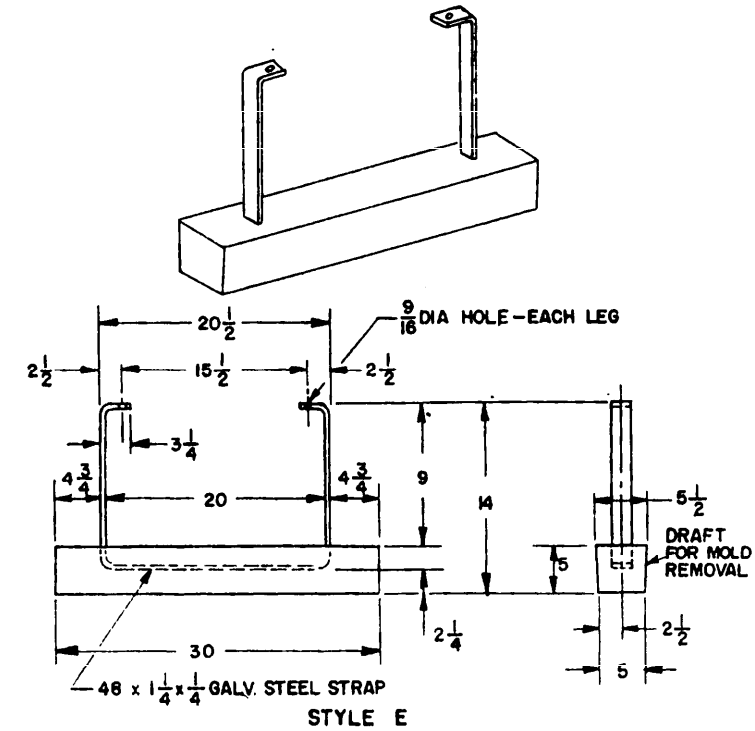

STYLE E

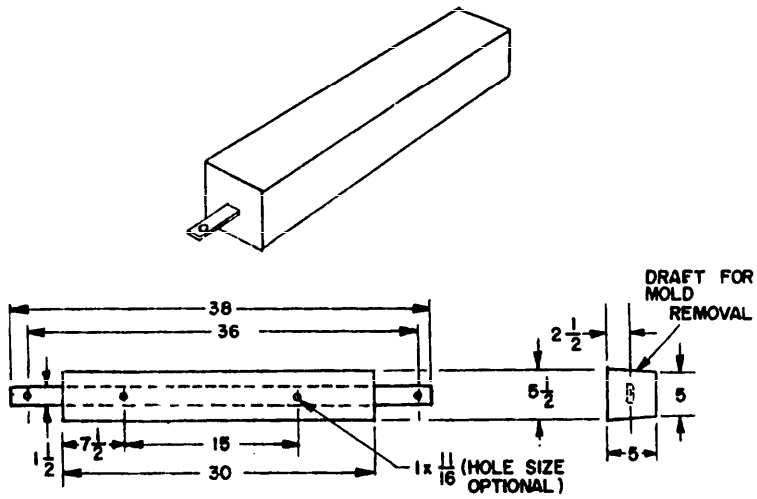

CAST-IN LONGITUDINAL GALVANIZED CORE IS 1/4 x 1 1/2 x 36. TWO 11/16 x 1 ELONGATED MOUNTING HOLES ARE PROVIDED ON 36 INCH CENTERS.

STYLE F

APPROX. WT. 52 LBS
UNIT OF PURCHASE LB
UNIT OF ISSUE EA

Figure 6 - Class 2, type MTS-52 magnesium tanker anode (strap core).

Downloaded from http://www.everyspec.com

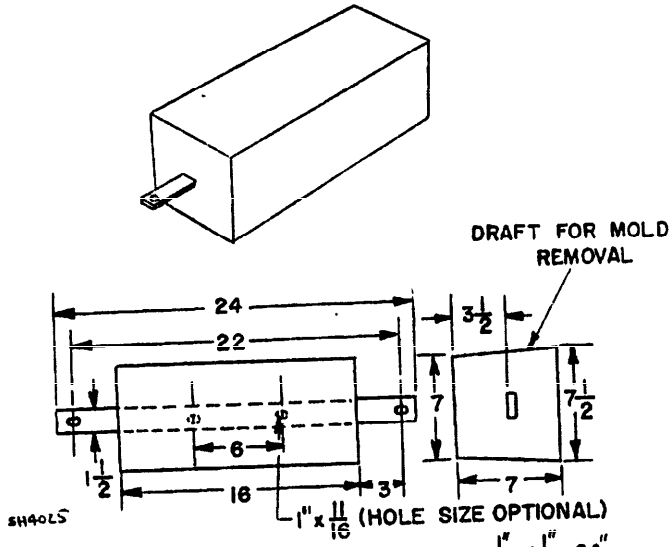

CAST-IN, GALVANIZED STEEL CORE IS $\frac{1}{4}$" x $1\frac{1}{2}$" x 24".
TWO $\frac{11}{16}$" x 1" MOUNTING HOLE ARE PROVIDED ON 22" CENTERS.

APPROX WT. 53LBS.
UNIT OF PURCHASE LB.
UNIT OF ISSUE EA.

Figure 7 - Class 2, type MTS-53, magnesium tanker anode (strap core).

Downloaded from http://www.everyspec.com

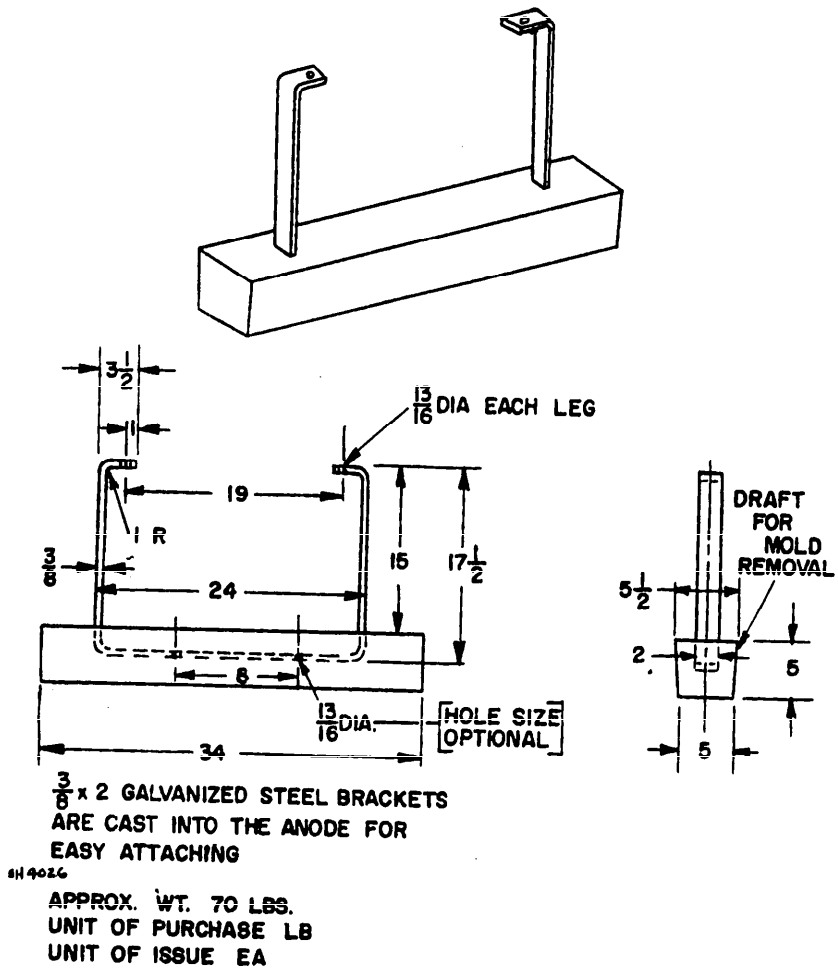

Figure 8 - Class 2, type MTS-70, magnesium tanker anode (strap core).

Downloaded from http://www.everyspec.com

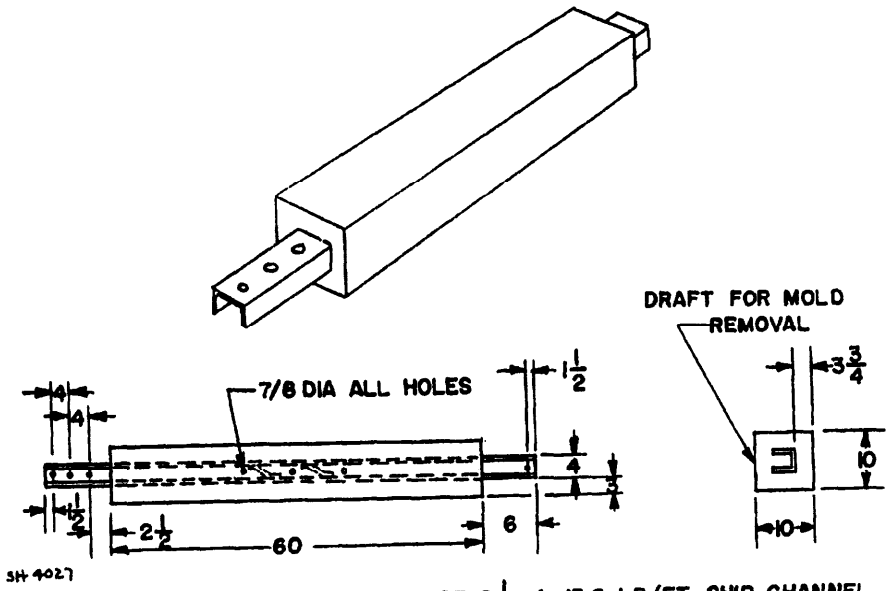

GALVANIZED STEEL CORE IS OF $2\frac{1}{2} \times 4$, 13.8 LB/FT SHIP CHANNEL

APPROX WT. 450 LBS.
UNIT OF PURCHASE LB.
UNIT OF ISSUE EA.

Figure 9 - Class 2, type MTC-450, magnesium tanker anode (channel core).

Downloaded from http://www.everyspec.com

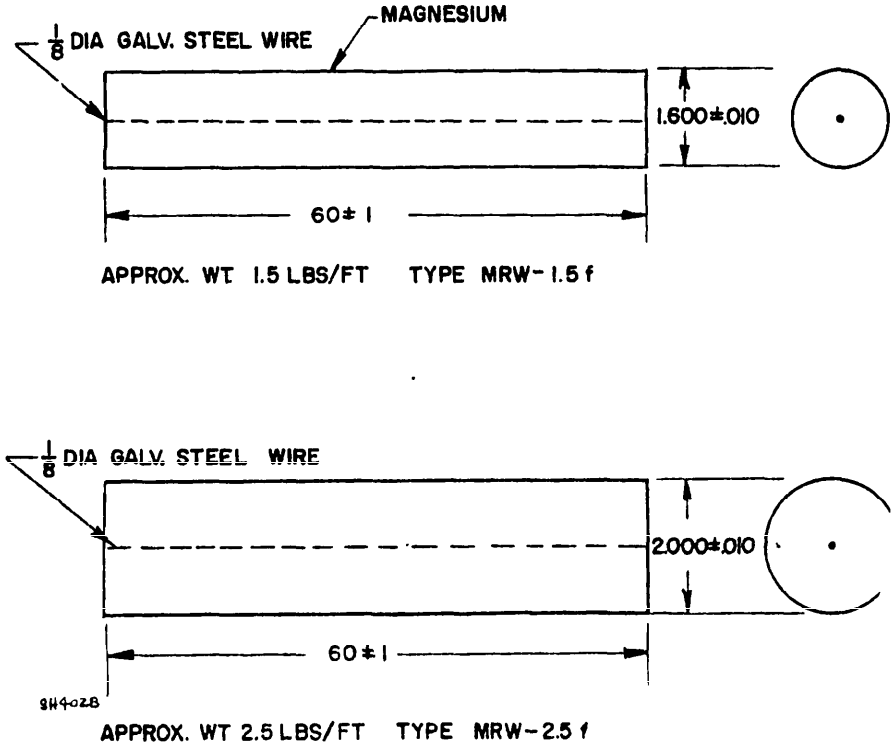

Figure 10 - Class 2, types MRW-1.5f and MRW-2.5f magnesium rod anodes (wire core).

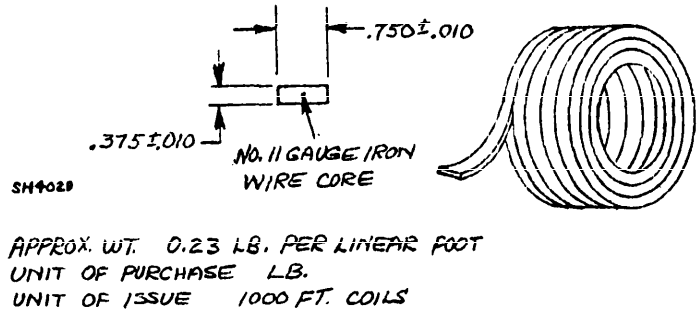

Figure 11 - Class 2, type MSW-0.23f magnesium strip anode (wire core).

Downloaded from http://www.everyspec.com

SPECIFICATION ANALYSIS SHEET

Form Approved Budget Bureau No. 119-R004

INSTRUCTIONS

This sheet is to be filled out by personnel either Government or contractor, involved in the use of the specification in procurement of products for ultimate use by the Department of Defense. This sheet is provided for obtaining information on the use of this specification which will insure that suitable products can be procured with a minimum amount of delay and at the least cost. Comments and the return of this form will be appreciated. Fold on lines on reverse side, staple in corner, and send to preparing activity.

SPECIFICATION

ORGANIZATION	CITY AND STATE

CONTRACT NO.	QUANTITY OF ITEMS PROCURED	DOLLAR AMOUNT
		$

MATERIAL PROCURED UNDER A

☐ DIRECT GOVERNMENT CONTRACT ☐ SUBCONTRACT

1. HAS ANY PART OF THE SPECIFICATION CREATED PROBLEMS OR REQUIRED INTERPRETATION IN PROCUREMENT USE?
   A. GIVE PARAGRAPH NUMBER AND WORDING.

   B. RECOMMENDATIONS FOR CORRECTING THE DEFICIENCIES.

2. COMMENTS ON ANY SPECIFICATION REQUIREMENT CONSIDERED TOO RIGID

3. IS THE SPECIFICATION RESTRICTIVE?

   ☐ YES ☐ NO IF "YES", IN WHAT WAY?

4. REMARKS *(Attach any pertinent data which may be of use in improving this specification. If there are additional papers, attach to form and place both in an envelope addressed to preparing activity)*

SUBMITTED BY *(Printed or typed name and activity)*	DATE

DD FORM 1 APR 63 1426 REPLACES NAVSHIPS FORM 4863, WHICH IS OBSOLETE

Downloaded from http://www.everyspec.com

FOLD

DEPARTMENT OF THE NAVY
BUREAU OF SHIPS
WASHINGTON 25, D. C.

OFFICIAL BUSINESS

POSTAGE AND FEES PAID
NAVY DEPARTMENT

CHIEF, BUREAU OF SHIPS
SPECIFICATIONS AND STANDARDIZATION BRANCH
DEPARTMENT OF THE NAVY
WASHINGTON, D. C. 20360

FOLD