Downloaded from http://www.everyspec.com

INCH-POUND
MIL-A-18001K(NAVY)
w/ INT. AMENDMENT 3
24 October 2007

USED IN LIEU OF
MIL-A-18001K
w/AMENDMENT 2
02 May 2005

MILITARY SPECIFICATION

ANODES, SACRIFICIAL ZINC ALLOY

This specification is approved for use by all Departments and Agencies of the Department of Defenses.

1. SCOPE

1.1 Scope. This specification covers the requirements for zinc anodes (galvanic protectors) in the form of plates, slabs, discs and rods for corrosion protection (cathodic protection) of metals and alloys. It also includes features of anode design and fabrication such as cast-in cores for mounting purposes. The material described by this specification contains elements for which the Occupational Safety and Health Administration (OSHA) has set standards for exposure limits. Handling, storage, and application of this material should be in accordance with the most recent Code of Federal Regulations Title 29, Part 1910 and 1915 and any other safety and health regulations (local or otherwise) which may apply.

1.2 Classification.The anodes are of the following classes and types, as specified (see 6.2).

1.2.1 Class 1 – Cast-in cores

Type ZHS – Zinc, hull slab (steel straps) (23 and 42 pound sizes).

Type ZHB – Zinc, hull slab (brass straps) (23 pound size).

Type ZHC – Zinc, hull slab (core straps) (23 and 42 pound sizes).

Type ZSS – Zinc, submarine slab (steel strap) (12 and 24 pound sizes).

Type ZTS – Zinc, teardrop shape (steel strap) (5 pound size) in accordance with NACA 460.

Type ZEP – Zinc, heat exchanger or fair water disc (pipe core or pipe bushing core).

Style A – Square slab (9 pound size).

Style B – Circular slab (various sizes).

Style C – Semi-circular slab (23 pound size).

Type ZBP – Zinc, bar (pipe core) (8 pound size).

Type ZDM – Zinc, segmented disc (machine formed interlocking core).

Type ZMP – Zinc, mooring chain (pipe core or pipe bushing core) (various sizes).

Comments, suggestions, or questions on this document should be addressed to: Commander, Naval Sea Systems Command, ATTN: SEA 05M3, 1333 Isaac Hull Avenue, SE, Stop 5160, Washington Navy Yard DC 20376-5160 or emailed to CommandStandards@navy.mil, with the subject line "Document Comment". Since contact information can change, you may want to verify the currency of this address information using the ASSIST Online database at http://assist.daps.dla.mil.

Downloaded from http://www.everyspec.com

Class 2 – Plain, no cores

Type ZRN – Zinc, rod, no core, extruded, drawn or rolled.

Type ZPN – Zinc, plate, no core, rolled.

1.3 Key to symbols. The letter designation of types of anodes have the following meaning:

First letter Z – (zinc) designates anode metal.

Second letter	H – (hull slab)	Designates shape or general use
	S – (submarine slab)	
	T – (teardrop shape)	
	E – (heat exchanger slab)	
	R – (rod, cylindrical)	
	P – (plate)	
	B – (bar, square)	
	D – (disc, segmented)	
	M – (mooring chain)	
Third letter	B - (brass straps)	Designates core
	S – (steel strap)	
	C – (core, strap)	
	P – (pipe core)	
	M – (machine formed interlocking core)	
	N – (no core)	

2. APPLICABLE DOCUMENTS

2.1 Government documents.

2.1.1 Specification, standards, and handbooks. The following specifications, standards, and handbooks form a part of this document to the extent specified herein. Unless otherwise specified, the issues of these documents are those cited in the solicitation or contract.

FEDERAL SPECIFICATIONS

QQ-B-639 - Brass, Naval: Flat Products (Plate, Bar, Sheet, and Strip)

FEDERAL STANDARDS

FED-STD-H28 - Screw-Thread Standards for Federal Services

FED-STD-H28/7 - Screw-Thread Standards for Federal Services Section 7 Pipe Threads, General Purpose

Downloaded from http://www.everyspec.com

(Copies of these documents are available online at http://assist.daps.dla.mil/quicksearch/ or http://assist.daps.dla.mil or from the Standardization Document Order Desk, 700 Robbins Avenue, Building 4D, Philadelphia, PA 19111-5094.)

2.2 Non-Government publications. The following specifications, standards, and handbooks form a part of this document to the extent specified herein. Unless otherwise specified, the issues of these documents are those cited in the solicitation or contract.

ASTM INTERNATIONAL

A36	-	Standard Specification for Carbon Structural Steel
A53	-	Standard Specification for Pipe, Steel, Black and Hot-Dipped, Zinc-Coated Welded and Seamless. (DOD adopted)
A513	-	Standard Specification for Electric-Resistance-Welded Carbon and Alloy Steel Mechanical Tubing
B139	-	Standard Specification for Phosphor Bronze Rod, Bar, and Shapes
E290	-	Standard Test Method for Bend Testing of Material for Ductility
E536	-	Standard Test Methods for Chemical Analysis of Zinc and Zinc Alloys.

(Copies of these documents are available from ASTM International, 100 Barr Harbor Drive, West Conshohocken, PA 19428-2959 or online at www.astm.org.)

NATIONAL ADVISORY COMMITTEE FOR AERONAUTICS (NACA)

460	-	The Characteristics of 78 Related Airfoil Sections From Tests in the Variable-Density Wind Tunnel

(Copies of this document is available from NASA/ASRC Aerospace, 7121 Standard Drive, Hanover, MD 21076, Attn: Help Desk or http://naca.larc.nasa.gov/.)

2.3 Order of precedence. In the event of a conflict between the text of this document and the references cited herein the text of this document takes precedence. Nothing in this document, however, supersedes applicable laws and regulations unless a specific exemption has been obtained.

3. REQUIREMENTS

3.1 Materials.

3.1.1 Zinc. The anodes shall conform to the composition specified in Table I as determined by the methods specified herein. Total of elemental constituents not specified in Table I shall not exceed 0.10 percent.

TABLE I. Chemical composition, zinc anodes (galvanic protectors).

Lead (max)	**Iron (max)**	**Cadmium range**	**Copper (max)**	**Aluminum range**	**Zinc (min)**
Percent 0.006	Percent 0.005	Percent 0.025-0.07	Percent 0.005	Percent 0.1-0.5	Percent 99.314

Downloaded from http://www.everyspec.com

3.1.2 Steel Straps and pipe cores. Types ZHS, ZHC, ZSS and ZTS anodes shall have steel strap cores confirming to ASTM A36. Types ZEP and ZBP anodes shall have steel strap cores conforming to ASTM A53. Type ZMP anodes shall have steel pipe cores conforming to ASTM A53 and A513. The steel shall be coated with zinc to a minimum thickness of 0.0005 inch. Hot dip or electrodeposition methods may be used. Either coating shall be adherent and free from flaking. The coating shall adhere tenaciously to the surface of the base metal. When the coating is cut or pried into, such as with a stout knife applied with considerable pressure in a manner tending to remove a portion of the coating, it shall only be possible to remove small particles of the coating by paring or whittling, and it shall not be possible to peel any portion of the coating so as to expose the steel. Lack of adhesion of the zinc coating at bends or absence of zinc coating at cut edges shall not be cause for rejection of fabricated anodes.

3.1.3 Brass straps. Type ZHB zinc anodes shall have brass strap cores conforming to alloy 482 of QQ-B-639 or phosphor bronze straps conforming to composition A of ASTM B139. The brass or bronze straps shall be coated with zinc to a minimum thickness of 0.0005 inch. Lack of adhesion of the zinc coating at bend or absence of zinc coating at cut edges will not be cause for rejection or fabricated anodes. Cracks in the base metal shall be cause for rejection. The maximum copper content in the zinc, as specified in Table I, may be increased to 0.020 percent for type ZHB anodes.

3.1.4 Steel machine formed interlocking cores. Type ZDM zinc anodes shall have machine formed interlocking cores conforming to commercial grade mild or leaded steel. The cores shall be flash coated with zinc, tin or aluminum prior to assembly within the zinc anodes.

3.1.5 Recovered materials steel components only. Unless otherwise specified herein, all equipment, material and articles incorporated in the products covered by this specification shall be new and shall be fabricated using materials produced from recovered materials to the maximum extent practicable without jeopardizing the intended use. The term “recovered materials” means materials which have been collected or recovered from sold waste and reprocessed to become a source of raw materials, as opposed to virgin raw materials. None of the above shall be interpreted to mean that the use of used or rebuilt products is allowed under this specification unless otherwise specifically specified.

3.1.6 OSHA standards. The material described by this specification contains elements for which the Occupational Safety and Health Administration (OSHA) has set standards for exposure limits. Handling, storage, and application of this material should be in accordance with the most recent Code of Federal Regulations Title 29, Part 1910 and 1915 and any other safety and health regulations (local or otherwise) which may apply.

Downloaded from http://www.everyspec.com

3.2 Manufacture.

3.2.1 Types ZHS, ZHB, and ZHC, hull slab anodes (see Figure 4 through 7), types ZSS submarine slab anode and ZTS teardrop anodes (see Figures 8, 9a, and 9b). Type ZHS, ZHB, ZHC, Z22, and ZTS anodes shall be manufactured by any casting process suitable to the contracting agency provided the anodes meet the other requirements covered by this specification. Open or closed molds may be used. Cores and straps shall be positioned so that they are embedded 1/4 inch minus 1/16 inch or plus 1/8 inch as shown on Figures 4 through 9 which may be measured from either surface of anode as applicable, except Figure 9(b) which shall be embedded 3/8 inch minus 1/16 inch or plus 1/8 inch. A metallurgical bond shall be obtained between the zinc and the strap when tested as specified in 4.4.2 or 4.4.2.1. Type ZHC anodes designated as shown on Figures 6A and 7A are intended for use with rubber washers for submarine application. Countersink for rubber washer may be cast or machined. Anode shall be manufactured so that countersink is centered on core hole. Type ZSS anodes designated as shown on Figure 9 may be mounted by welding or by fasteners. Those intended to be attached by fasteners shall indicated the requirements for mounting holes in the strap. The mounting hole shall be counterbored on the structure side of the strap.

3.2.2 Type ZEP heat exchanger slab anode and type ZMP mooring chain anode (see Figures 10 and 13). Type ZEP and ZMP anodes may be manufactured by any method suitable to the contracting agency provided the anodes meet the other requirements of this specification. The pipe core inserts shall conform to 3.1.2. A sound metallurgical bond shall be obtained between the core and anode material for at least 30 percent of the total surface of the core in contact with the anode as specified in 4.4.2 or 4.4.2.1. The position of the pipe core insert shall not vary more than plus or minus 1/8 inch from center as shown on Figures 10 and 13.

3.2.3 Type ZBP, zinc bar anode (see Figure 11). Type ZBP anodes may be manufactured by any method suitable to the contracting agency provided the anodes meet the other requirements of this specification. The position of the pipe core insert specified in 3.1.2 shall not vary more than plus or minus ¼ inch from the center as shown on Figure 11. The metallurgical bonding requirements between anode and core specified in 4.4.2 shall apply.

3.2.4 Types ZPN and ZRN anodes (no core) (see Figure 12). Type ZPN and ZRN anodes (no core) shall be manufactured by any process suitable to the contracting agency provided the anodes pass the tests demonstrating mechanical properties (see 3.6) and other requirements covered by this specification.

3.2.5 Type ZDM, zinc segmented disc, machine formed interlocking core anode (see Figure 1). Type ZDM anode may be manufactured by any method suitable to the contracting agency provided the anodes meet the other requirements of this specification. Metallic bonding or an interference fit of the core into the anode shall be required so that an axial force applied from the stud end to remove the core insert is a minimum of 750 pounds.

3.2.5.1 Core insert. The machine formed core insert specified in 3.1.4 shall be manufactured in accordance with details and tolerances shown in piece 2 of figure 1 FED-STD-H28 and FED-STD-H28/7. (This core insert has been designed for mass production by modern machine methods. The insert consists of an integral piece having a threaded male stud at one end and a tapped hole at the other end. Provision has been made to achieve self-locking characteristics to interlocking threaded assemblies of multiple segmented anode discs by interference fit of bottom male threads into a taper tapped hole). These anodes shall screw together very snugly by hand tightening or by using simple hand tools such as pliers or pipe wrenches.

3.3 Dimensions.

3.3.1 Types ZHS, ZHB, ZHC, ZTS, ZSS, ZEP, ZBP, ZDM, ZRN, and ZMP. The specified anodes shall conform to the dimensions shown on Figures 1 to 13, inclusive. Dimensions are in inches unless otherwise indicated.

3.3.2 Types ZPN anodes. Type ZPN anode shall be 48 inches in length by 24 inches in width.

3.3.2.1 Thickness. Thickness of type ZPN anode shall be either ½ or 1 inch, as specified (see 6.2).

Downloaded from http://www.everyspec.com

3.3.3 Weight. ZSS-24, ZSS-12, ZHC-42, ZHC-23,ZHS-42, and ZHS-23 shall have the following minimum weight requirements: ZSS-24 (21.5), ZSS-12 (11.0), ZHC-42 (39), ZHC-23 (20.4), ZHS-42 (41) and ZHS-23 (21.5) pounds, as indicated in parenthesis. The total weight of the specified type of anode received divided by the total number of anodes of that type, shall be equal to or greater than the minimum (that is, 21.5, 11.0, 39, or 41) weight of anode type specified. If the weight is less than the minimum weight for the type of anode specified, it shall be cause for rejection of the entire lot.

3.4 Permissible variation in dimensions. Dimensions shall be in accordance with Figures 1 through 13.

3.4.1 Length and width of types ZHS, ZHB, ZHC, ZTS, ZPN, ZSS and ZBP anodes. The width and length of the zinc alloy on types ZHC, ZHB, ZHC, ZTS, ZPN, ZSS and ZBP anodes shall not vary more than plus or minus 1/8 inch, measured at widest surface of the tapered (for mold release) anode.

3.4.2 Length of type ZRN anodes. A variation of plus or minus 1 inch will be permitted based on nominal lengths of 3 and 6 feet.

3.4.3 Diameter of types ZEP, ADM, and ZRN anodes. The diameter or width, whichever is the larger, of type ZEP anode shall not vary from the specified dimension by more than plus or minus 1/8 inch. The diameter of the type ZDM anode shall not vary more than plus 0.025 or minus 0.005 inches from the specified diameter. The diameter of the ZRN anode shall not vary more than plus or minus 1/32 inch from the specified diameter.

3.4.4 Thickness. The thickness of types of ZHS, ZHB, ZHC, ZTS, ZPN, ZSS, ZEP and ZBP zinc anodes shall not vary more than plus or minus 1/8 inch. Except for ZEP anodes, thickness measurements shall be taken at random 1 inch from any edge of the anode by means of a suitable caliper, avoiding any surface irregularities which would interfere with a representative measurement. ZEP thickness measurements shall be taken at random, a distance from the edge of approximately one-half the radius of the anode. The thickness of type ZDM anode shall not vary more than plus or minus 1/64 inch.

3.4.5 Eccentricity of core in type ZDM anode. The cores of type ZDM anode shall be positioned axially and concentrically in the zinc disc. Eccentricity greater than 0.005 inch shall not be permitted.

3.4.6 Stud hole elongation for type ZSS anodes. If specified (see 6.2), ZSS straps may be provided and modified as shown on Figure 9A.

3.5 Marking of anodes.

3.5.1 Prohibition of painting. The zinc anodes, types ZHS, ZHB, ZHC, ZSS, ZBP and ZMP shall have the words, “DO NOT PAINT” die-stamped or cast on the exposed face of the anodes (see Figures 4, 5, 7, 9, 11 and 13). No marking shall be required for types ZEP, ZPN, ZDM, ZTS and ZRN zinc anodes. For type ZMP, the nominal anode size shall be marked as specified on Figure 13.

3.5.1.1 Type ZHB anode markings. One end of each cast-strap of each type ZHB anode shall be painted red so that the installing activity can distinguish it from type ZHS anodes. One coat of red paint shall be applied between the joggled bevel of the strap and zinc anode. The coating shall be approximately 1/2 inch wide and shall extend across one side of each strap so as to be readily visible when the anode is installed. The foot of the strap shall not be painted.

3.5.2 Heat identification. Each anode shall be cast or die-stamped with the following: manufactures symbol, unique non-recurring heat number, and capital letter corresponding, to the revision letter of the military specification to which the anode conforms. (For this specification issue, the letter “K” should be used.)

3.6 Mechanical properties.

3.6.1 Fracture or cracking. When tested in accordance with 4.4.4.1, type ZRN rods and ZPN plates shall not fracture or show signs of cracking.

3.6.2 Torsional shear strength. When tested in accordance with 4.4.4.2, type ZRN anodes shall have a minimum Torsional shear strength of 12,000 pounds per square inch (lb/in^2).

3.7 Workmanship.

Downloaded from http://www.everyspec.com

3.7.1 Zinc. The zinc anodes shall be free of flash burrs, cracks, blow holes, pipes and surface slag consistent with good commercial practice. Anode surfaces will be visually inspected at 10X magnification. No cracks with a surface length of greater than 1/8 inch shall be allowed. The cast anodes shall be free of shrinkage cavities exceeding 1/4 inch in depth, except that anodes 2 inches thick or more shall be free of shrinkage cavities exceeding 3/8 inch in depth, when measured from a straight edge placed diagonally across the opposite edges of the anode, except for type ZPN anodes, the shrinkage cavities shall be measured over a 12- by 12-inch area. In addition to the above allowable shrinkage cavities, surface irregularities of the anode exceeding 1/8 inch in depth shall not be permitted on one face of slab or disc type anodes unless at least 1/8 inch of sound metal covers the entire strap of core area. Types ZDM and ZRN anodes shall be smooth on their curved surfaces.

3.7.2 Metal cores. Metal cores extensions from the anodes shall be smooth and free of sharp burrs. The cast-in cores shall have metallurgical bonds specified herein free of air pockets and inclusions consistent with good commercial practice.

4. QUALITY ASSURANCE PROVISIONS

4.1 Responsibility for inspection. Unless otherwise specified in the contract or purchase order, the contractor is responsible for the performance of all inspection requirements (examinations and tests) as specified herein. Except as otherwise specified in the contract or purchase order, the contractor may use his own or any other facilities suitable for the performance for the inspection requirements specified herein, unless disapproved by the Government. The Government reserves the right to perform any of the inspections set forth in the specification where such inspections are deemed necessary to ensure supplies and services conform to prescribed requirements.

4.1.1 Responsibility for compliance. All items shall meet all requirements of sections 3 and 5. The inspection set forth in this specification shall become a part of the contractor's overall inspection system or quality program. The absence of any inspection requirements in the specification shall not relieve the contractor of the responsibility of ensuring that all products or supplies submitted to the Government for acceptance comply with all requirements of the contract. Sampling inspection, as part of the manufacturing operations, is an acceptable practice to ascertain conformance to requirements, however, this does not authorize submission of known defective material, either indicated or actual, nor does it commit the Government to accept defective material.

4.2 Quality conformance inspection.

4.2.1 Lot. For the purpose of sampling, a lot shall consist of all zinc anodes of the same class and type, poured or cast from one homogeneous heat or melt of a single charge or raw materials. The addition of any material to the heat or melt at any time constitutes a new lot.

4.2.2 Sampling for visual and dimensional examination. As a minimum, the contractor shall select a sample quantity of anodes from each lot in accordance with table II and inspect them in accordance with 4.3. If one or more defects are found in any sample, the entire lot shall be rejected. The contractor has the option of screening 100 percent of the rejected lot for the defective characteristic(s) or providing a new lot which shall be inspected in accordance with the sampling plan provided herein.

Downloaded from http://www.everyspec.com

TABLE II. Sampling for visual and dimensional examination.

Lot size	Sample size	Accept	Reject1
2-25	3	0	1
26-50	5	0	1
51-90	6	0	1
91-150	7	0	1
151-280	10	0	1
281-500	11	0	1
501-1200	15	0	1
1201-3200	18	0	1
3201-10,000	22	0	1
10,000-over	29	0	1

4.2.3 Sampling for core bond tests. From each lot specified in 4.2.1, two anodes shall be selected at random of types ZHS, ZHB, ZHC, ZSS, ZTS, ZEP, ZMP, and ZBP and five anode discs of type ZDM for the test specified in 4.4.2.

4.2.4 Sampling for chemical analysis. Anodes shall be taken from each homogenous lot to verify compliance with the chemical requirements of 3.1.1 and Table I. As a minimum, the first, middle, and last poured anode shall be tested to verify compliance with the chemical requirements of 3.1.1 and Table I. Failure to meet the requirements of 3.1.1 shall be cause for the rejection of the anode and the lot from which the failed anode originated. The drilling for chemical analysis shall be made with a special nonferrous drill bit. See 4.2.4.6, 6.5.1 and 6.5.2 for sample preparation and drilling procedure. From each of the required anodes, one 2-ounce sample shall be taken by drilling or machining the material at the locations specified in 4.2.4.1 to 4.2.4.6, inclusive. The drilling or machining shall be done by the contractor. The drill or tool bit shall not penetrate into the core material of the cored type anodes. The drilled or machined anodes may be included in the delivery of the material, except type ZDM which shall be discarded. Chemical test records shall be retained to verify test results, for a minimum of 5 years.

4.2.4.1 Drilling locations. Type ZHS, ZHB and ZPN anodes shall be drilled or machined at locations about 2 to 5 inches from the short edge as appropriate to keep away from the encased core.

4.2.4.2 Drilling precautions. Type ZSS, ZHC and ZTS anodes shall be drilled or machined at points not greater than ½ inch from the long edge.

4.2.4.3 Drilling points for types ZEP, ZMP, and ZBP. Type ZEP, ZMP, and ZBP anodes shall be drilled at points midway between outer edge of the core and the edge of the anode.

4.2.4.4 Types ZRN and ZDM samples. Type ZRN anodes shall have two 1-pound minimum sections cut from ends of a nominal length. Type ZDM anodes shall have a sufficient number of discs machined or drilled to make two 4-ounces quantities. The anode shall be sampled as specified in 4.2.4.5 and 4.2.4.6.

4.2.4.5 Type ZDM. Type ZDM anodes shall be machined or drilled at the outer surface to a depth not exceeding ¼ inch.

1 Rejected lots may be screened by the contractor and twice the sample size resubmitted for acceptance inspection and tested with same accept/reject criteria. All defective items must be replaced with acceptable items prior to lot acceptance. Resubmitted lots that fail retest shall be rejected.

Downloaded from http://www.everyspec.com

4.2.4.6 Surface chips. One 2-ounce sample for each anode specified in 4.2.4 shall be taken at the surface in contact with mold wall by drilling or machining to a maximum depth of 1/4 inch. The sample for types ZPN or ZRN shall be taken by drilling completely through both larger surfaces or through the diameter of the anode as applicable. The samples shall be collected in individual clean containers, and properly labeled as to lot, melt, and sample numbers. Sample ships may be taken from anodes which have passed the applicable bond test. Samples shall be clean, free from dirt, oil, grit and foreign matter. The samples shall be sent to a laboratory satisfactory to the contracting agency. A method for sampling anodes for chemical analysis is specified in 6.5.

4.2.5 Sampling for physical testing. At least five type ZRN and five type ZPN anodes shall be selected at random from a lot. Type ZRN anodes shall conform to the tests specified in 4.4.4. Type ZPN anodes shall conform to the test specified in 4.4.4.1.

4.2.5.1 Physical test sample dimensions for ZPN type anodes. ZPN test samples shall be cut from the plate anodes and shall be of the following dimensions:

Width: Twice the thickness of the anode.

Length: 12 inches (or to suit test apparatus).

4.3 Visual and dimensional examination. Each anode selected in accordance with 4.2.2 shall be examined for conformance to requirements of 3.3 through 3.7. If any number of anodes do not conform to 3.3 through 3.7 it shall be cause for rejection of the entire lot.

4.4 Tests. The following tests shall be performed.

4.4.1 Weight test. The entire lot of each type anode shall meet the weight requirements as specified in 3.3.3.

4.4.2 Core bonding test. One of the following core bonding test shall be performed on each anode selected in accordance with 4.2.3.

4.4.2.1 Core bonding tests (types ZHS, ZHB, ZHC, ZSS, ZTS, ZMP, ZEP and ZBP). Each anode selected to represent the lot shall be cut along the axis of each strap or core, and the cut surface shall be ground reasonably smooth. These surfaces shall be polished with a 240-mesh emery abrasive until the zinc-strap interface is distinctly visible. At least 30 percent of this interface shall show no separation when examined at approximately 10X magnification. Zinc anodes may have a bead or buttress projecting from the anode edge along the strap not exceeding ¼ inch. Less bond between core and zinc than specified herein shall be cause for rejection of the lot.

4.4.2.2 Alternate core bonding test (types ZHS, ZHB, ZHC, ZSS, ZTS, ZMP, ZEP and ZBP) Using any suitable method, the cores shall be torn from each anode selected to represent the lot. The use of a sledge hammer to break the zinc away from the cores has been found to be satisfactory. The area showing bond shall be established by visual inspection of the portion of the cores which were contained within the anode. Metallurgical bond between the zinc and the core shall be at least 30 percent of the total surface area of each core in contact with the zinc of the anode. For the purpose of determining the surface area of the encased core in the anode, marks shall be scribed on the strap around the periphery of each anode at locations where the straps protrude from the anode. The total area of the strap shall be computed between the scribe marks. The surfaces shall have a smooth grey matte finish where bonding has been adequate and either a shiny metallic or rough, dark or discolored finish where bonding has been inadequate. Examine both core and zinc mating surfaces. Less bond between core and zinc than that specified herein shall be cause for rejection of the entire lot.

4.4.2.3 Type ZDM anode. A minimum steady pressure of 750 pounds from a hand operated pen press applied axially shall be required to remove the core from the anode.

4.4.2.4 Sample anodes. Sample anodes shall be discarded and not included in the delivery of material after the core bond tests are performed. The remaining lengths of ZRN and ZPN anodes may be included in the delivery of material after the physical tests of 4.4.4. Sampling for chemical analysis specified in 4.2.4 shall be made prior to discarding the anodes specified in 4.4.2.1 through 4.4.2.3.

Downloaded from http://www.everyspec.com

4.4.3 Chemical analysis. The chips selected in accordance with 4.2.4 shall be analyzed to determine conformance with 3.1.1. A strong magnet shall be used to remove any iron contamination picked up during the preparation of the chips. The chips shall be washed in an iron-free degreasing solvent prior to analysis. If any sample does not conform to the chemical composition specified in Table I, it shall be cause for rejection of the lot represented by the sample.

4.4.3.1 Determination of aluminum, cadmium, copper, iron and lead. The aluminum, cadmium, copper, iron and lead content of zinc shall be determined in accordance with the appropriate methods in ASTM E536 using the atomic absorption, inductively coupled plasma, or directly coupled plasma spectrophotometers.

4.4.3.2 Spectrochemical analysis. Spectrochemical analysis shall be in accordance with any standard method approved by a standard issue body such as the American National Standards Institute or ASTM E536 and accepted by the Government.

4.4.4 Physical tests.

4.4.4.1 Bend test. Type ZRN anodes, selected in accordance with 4.2.5, shall be bent 45 degrees around a mandrel of three times the diameter of the ZRN type anode. Type ZPN anodes, selected in accordance with 4.2.5, shall be bent 45 degrees around a mandrel that has the diameter of three times the thickness of ZPN anodes. The anodes shall be bent in accordance with procedures specified in ASTM E290. After bending, the convex surface of the specimens shall be inspected for cracking by visual examination. Any evidence of cracking shall represent failure of the test and shall be cause for rejection of the entire lot.

4.4.4.2 Torsional shear test. Type ZRN anodes, selected in accordance with 4.2.5, shall be subjected to torsional shear at a rate of 10 to 12 revolutions per hour using a Tinius-Olson torsional shear apparatus, or equal. Failure of the anode to withstand a torsional shear of 12,000 lb/in^2 shall be cause for rejection of the lot.

4.5 Inspection of packaging. Sample packages and packs, and the inspection of the preservation, packing and marking for shipment, stowage and storage shall be in accordance with the requirements of section 5 and the documents specified therein.

5. PACKAGING

5.1 Packaging. For acquisition purposes, the packaging requirements shall be as specified in the contract or order. When packaging of material is to be performed by DoD or in-house contractor personnel, these personnel need to contact the responsible packaging activity to ascertain packaging requirements. Packaging requirements are maintained by the Inventory Control Point's packaging activities within the Military Service or Defense Agency, or within the military service's system commands. Packaging data retrieval is available from the managing Military Department's or Defense Agency's automated packaging files, CD-ROM products, or by contacting the responsible packaging activity.

6. NOTES

(This section contains information of a general or explanatory nature that may be helpful, but is not mandatory.)

6.1 Intended use.The anodes are primarily intended for use in corrosion prevention in seawater of surface ship and submarine hulls, steel and aluminum equipment and structures, sea chests, sonar domes, mooring chains, and the seawater side of condensers and other heat exchangers. The anodes may also be used for corrosion prevention of pipe lines and other installations underground. The use of a particular anode is determined by the nature and geometry of the structure to be protected. Refer to applicable installation instructions for types, amounts, locations, and mounting of anodes.

6.2 Acquisition requirements. Acquisition documents must specify the following:

(a) Title, number, and date of this specification.

(b) Class and type (see 1.2).

(c) As required, the specific issue of individual documents referenced (see 2.1.1 and 2.2).

Downloaded from http://www.everyspec.com

(d) Style of type ZEP, diameter of type ZEP, style B; size of type ZMP (see Figure 13); diameter of type ZDM anode (see Figure 1); pipe or bolt diameter of type ZRN required (see Figure 12); length, width, and thickness of types ZHS (see Figures 4 and 5); ZHC, ship or submarine usage with neoprene washers (see Figures 6, 6A, 7, and 7A).

(e) Thickness of type ZPN anode, whether 1/2 or 1 inch (see 3.3.2.1).

(f) Elongation of type ZSS anode straps (see 3.4.6).

(g) Total number of anodes required (see 6.3).

Downloaded from http://www.everyspec.com

TABLE IV. National stock numbers.

Anode type	Weight-size	National Stock Number
ZHS-23	23 lbs	9Z-**5342** 00-277-7559
ZHS-42	42 lbs	**5342** 00-134-8131
ZHB-23	23 lbs	**5342** 00-662-9827
ZHC-23	23 lbs	**5342** 00-813-6058
ZHC-42	42 lbs	**5342 00-486-0957**
ZSS-12	12 lbs	**5342** 00-290-8243
ZSS-12 **(Elongated Strap End)**	12 lbs	**5342** 01-356-6382
ZSS-24	24 lbs	**5342** 01-357-4579
ZSS-24 **(Elongated Strap End)**	24 lbs	**5342** 01-356-6383
ZTS-5	5 lbs	**5342** 01-294-2332
ZEP-A (square)	9 lbs	**5342** 00-543-3032
ZEP-B (circular)	24 lbs	**5342** 00-702-1664
"	16 lbs	**5342** 00-702-1372
"	**7.2 lbs**	**5342** 00-702-1371
"	**4.9 lbs**	**5342** 00-527-2366
"	**3.2 lbs**	**5342** 00-582-2011
"	**1.8 lbs**	**5342** 00-582-2012
"	**0.8 lbs**	**5342** 00-527-2368
ZEP-C (semi-circular)	23 lbs	**5342** 00-702-1665
ZBP	8 lbs	**5342** 00-526-3679
ZDM	1.050 in dia	**5342** 00-682-2174
"	0.825 in dia	**5342** 00-725-3999
"	0.625 in dia	**5342** 00-725-3998
"	0.500 in dia	**5342** 00-725-3997
ZMP	4 in dia	**5342** 01-357-4580
"	3.5 in dia	**5342** 01-356-6384
"	3.0 in dia	**5342** 01-356-8260
"	2.75 in dia	**5342** 01-356-6385
"	2.5 in dia	**5342** 01-356-6386
"	2.25 in dia	**5342** 01-356-6387
"	2 in dia	**5342** 01-356-6252
"	1.75 in dia	**5342** 01-356-6253
"	1.25 in dia	**5342** 01-361-2565
ZRN	1.315 in dia	**5342** 00-813-6057 **(cancelled)**
"	1.050 in dia	**5342** 00-813-6056
" **(6.5 in length)**	0.840 in dia	**5342** 00-576-1749
" **(3 ft length)**	0.840 in dia	**5342** 00-664-0531
" **(6 ft length)**	0.840 in dia	**5342** 00-796-4354
" **(6 ft length)**	0.840 in dia	**5342** 00-813-6055
"	0.675 in dia	**5342** 00-813-6054
"	0.540 in dia	**5342** 01-356-6381
"	0.405 in dia	**5342** 00-813-6053
ZPN	24 * 48 * 0.5 in	**5342** 00-290-3793 **(discontinued)**
"	24 * 48 * 1 in	**5342** 01-358-4414

Downloaded from http://www.everyspec.com

6.3 Ordering by quantity. The order for anodes should specify the exact number of anodes required (see 6.2). Acquisition of anodes by weight is too practical and is not recommended.

6.4 General forms and dimensions. When material is ordered in the form of slabs, bars, discs, or rods, it is to be understood that these terms refer merely to the general form and dimensions of the material, and do not have any technical significance as to the methods of manufacture.

6.5 Sampling procedure.

6.5.1 Drilling procedure. The drilling for chemical analysis should be made with a special nonferrous drill in a clean location (used only for that purpose). The drilling bits should be kept clean of dirt, grit, and other foreign matter; kept properly sharpened; and used only for sampling purposes. After each use, the drilling bit should be immersed in a degreasing solvent and wiped dry with a clean rag. The drilling bits, when not in use, should be stored in an inhibited lubricating oil. The inhibited lubricating oil should be kept in a covered glass container provided with an air vent. The drilling bits should be wiped dry with a clean rag prior to use. Samples should be taken with a dry drill. If automatic power drilling equipment is available, a solid tungsten carbide or Tantung twist drill bit about 1/2 inch in diameter is suitable. Where a hand-held power drill is used, the samples should be taken by drilling with a solid tungsten carbide or Tantung twist drill bit about 1/4 inch in diameter. A smaller drill bit may be used where the size of the anode does not permit using the specified diameters. The drills may be used at high speeds and feeds.

6.5.2 Machining procedure. The chips for chemical analysis should be made with a special nonferrous tool in a place which has been cleaned for that specific purpose. Instructions specified in 6.5.1 apply to the use and care of this tool.

6.6 Sub-contracted material and parts. The packaging or preparation for delivery of requirements of referenced documents listed in section 2 do not apply when material and parts are acquired by the contractor for incorporation into the equipment and lose their separate identity when the equipment is shipped.

6.7 Subject term (key word) listing.

Corrosion
Disc
Galvanic
Plate
Rod
Slab

6.8 Amendment notations. The margins of this specification are marked with vertical lines to indicate modifications generated by this amendment. This was done as a convenience only and the Government assumes no liability whatsoever for any inaccuracies in these notations. Bidders and contractors are cautioned to evaluate the requirements of this document based on the entire content irrespective of the marginal notations.

Downloaded from http://www.everyspec.com

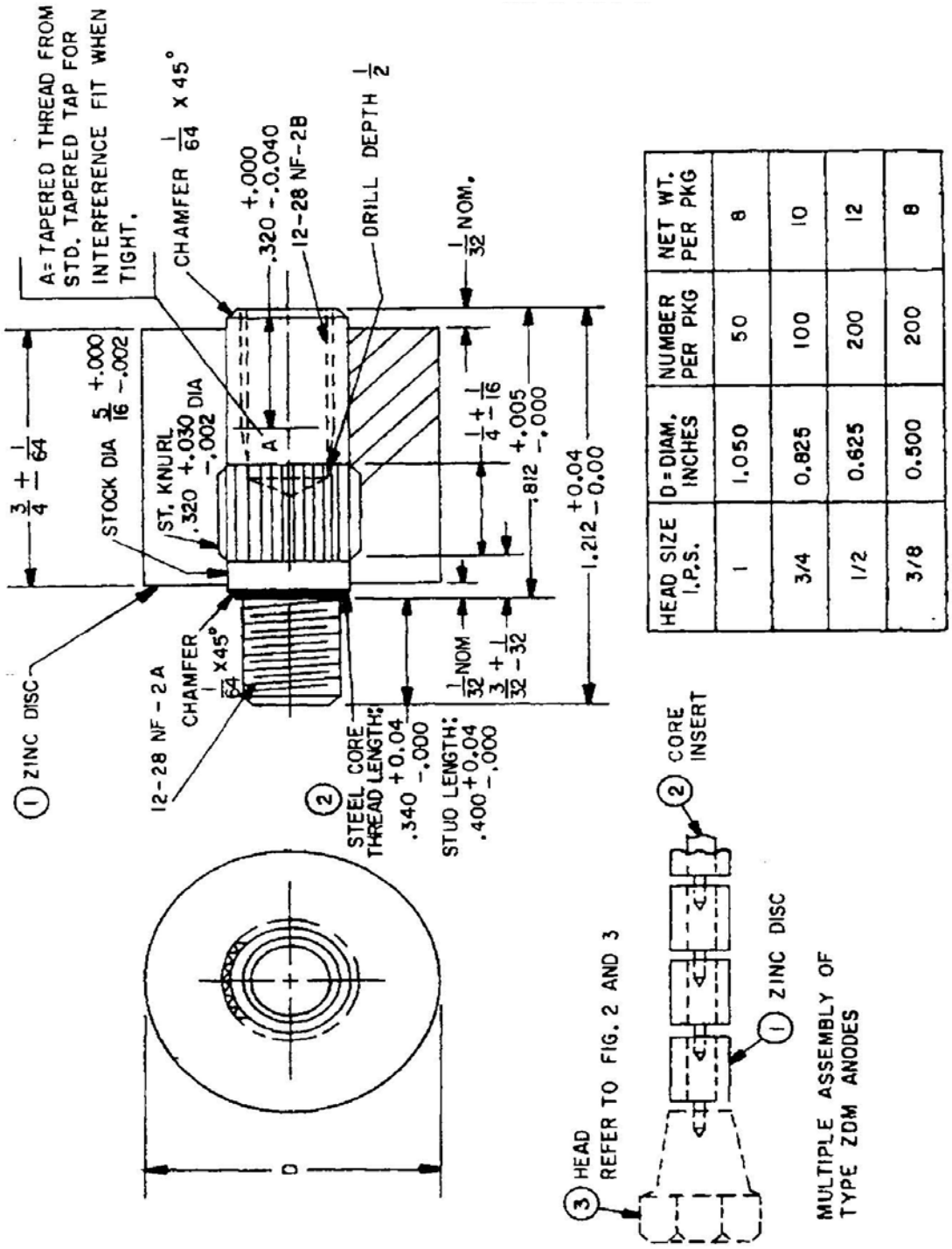

HEAD SIZE I.P.S.	D=DIAM. INCHES	NUMBER PER PKG	NET WT. PER PKG
1	1.050	50	8
3/4	0.825	100	10
1/2	0.625	200	12
3/8	0.500	200	8

NOTE: ALL DIMENSIONS ARE IN INCHES.

FIGURE 1. Zinc, segmented disc, machine-formed interlocking core, type ZDM.

Downloaded from http://www.everyspec.com

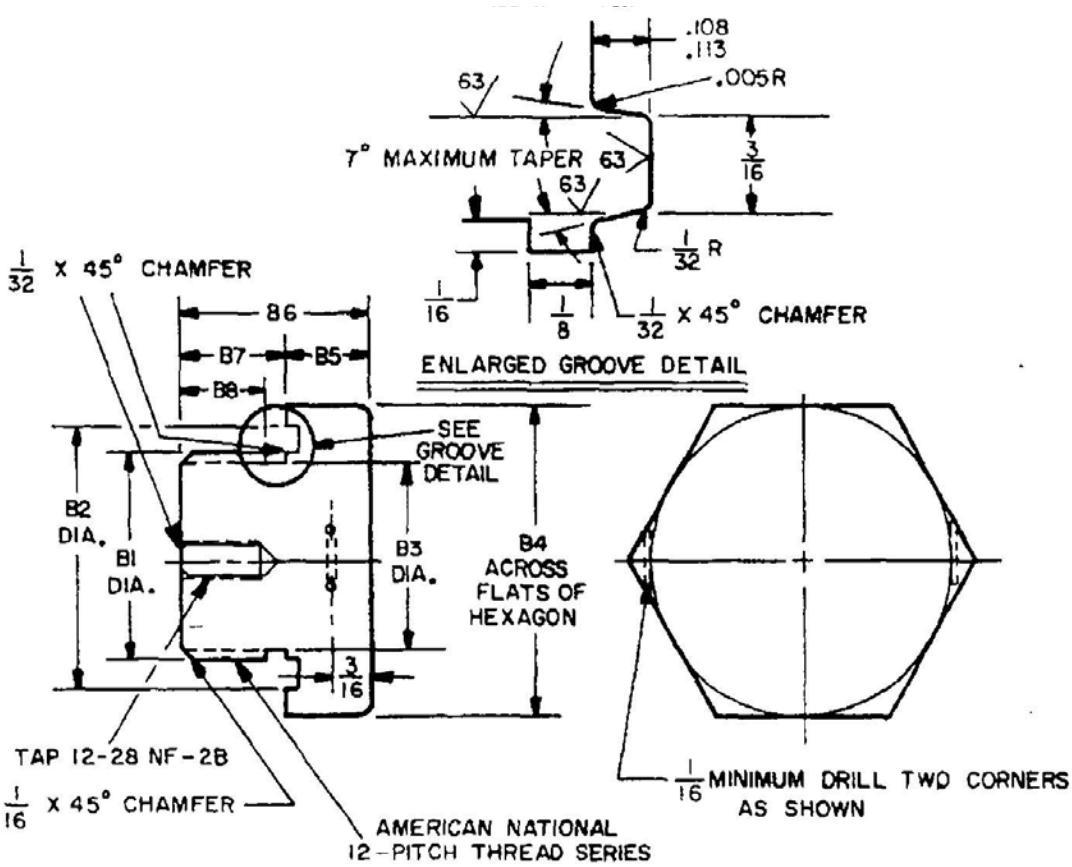

ZINC COUPON	B1	B2	B3	B4	B5	B6	B7	B8
DIAMETER	EXTERNAL THREAD							
0.825	1-1/16- 12 UN-2	1-7/16	15/16	1-11/16	1/2	1-1/8	5/8	1/2
1.050	1-5/16- 12 UN-2	1-11/16	1-3/16	1-15/16	1/2	1-3/8	7/8	3/4

NOTES:

1. ALL FRACTIONAL DIMENSIONS TO HAVE A TOLERANCE OF PLUS OR MINUS 1/64 INCH.
2. ALL DIMENSIONS ARE IN INCHES.

FIGURE 2. Class A (straight thread O-ring seal) support plug for ZDM anode.

Downloaded from http://www.everyspec.com

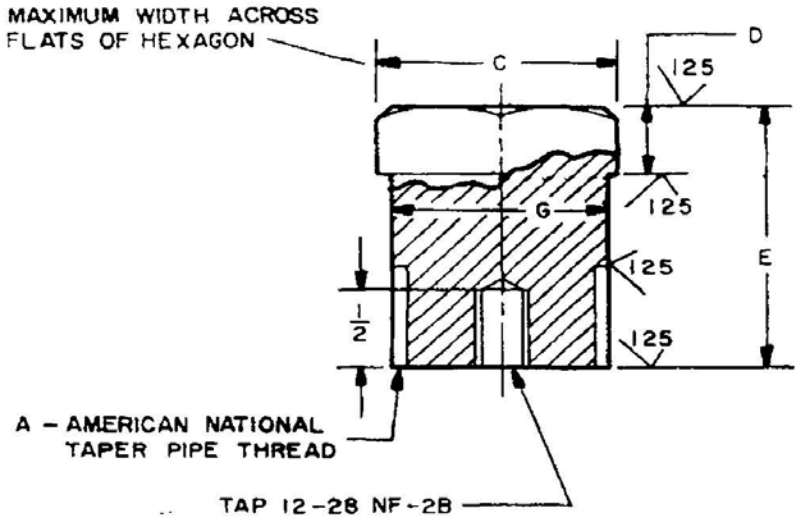

NOMINAL PIPE SIZE	A	C	D	E	G ±.003	ACTUAL DIAMETER OF ZINC ANODE
1	1	1-1/2	1/2	1-3/8	1.315	1.050
3/4	3/4	1-1/4	3/8	1-1/8	1.050	0.825
1/2	1/2	1	3/8	1	0.840	0.625
3/8	3/8	3/4	5/16	1	0.675	0.500

NOTES:

1. ALL FRACTIONAL DIMENSIONS TO HAVE A TOLERANCE OF PLUS OR MINUS 1/64 INCH.
2. ALL DIMENSIONS ARE IN INCHES.

FIGURE 3. Class B (tapered pipe thread) support plug for ZDM anode. (Replacement use only, not for new construction.)

Downloaded from http://www.everyspec.com

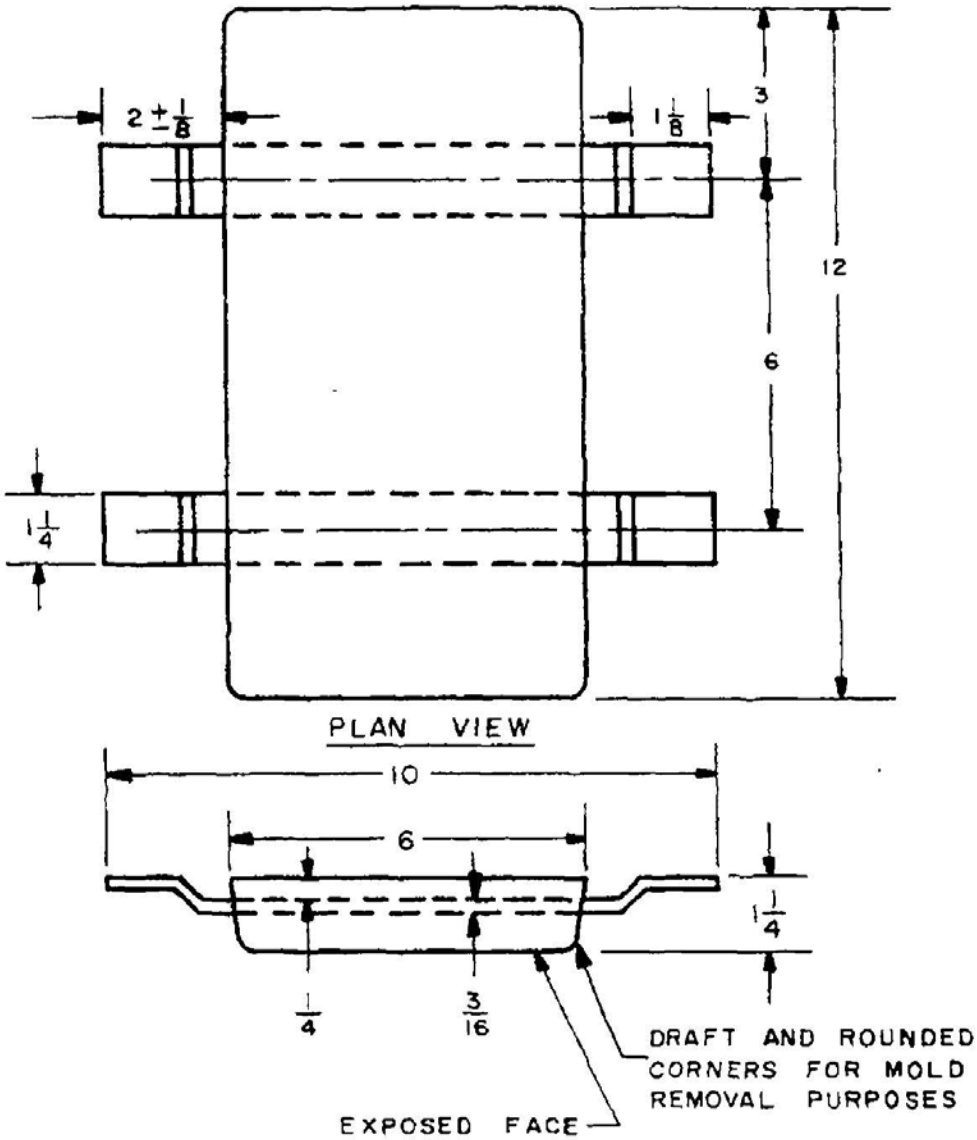

MINIMUM WEIGHT 21.5 POUNDS.

NOTES:

1. ANODE MAY BE CAST WITH STRAP IN THE UP OR DOWN POSITION. ALL DIMENSIONS (INCHES) REFER TO THE WIDER AND LONGER EDGES OF THE ANODES.
2. TOLERANCE PLUS OR MINUS 1/8.

FIGURE 4. Zinc hull slab (steel straps), type ZHS-23; zinc hull slab (brass straps), type ZHB.

Downloaded from http://www.everyspec.com

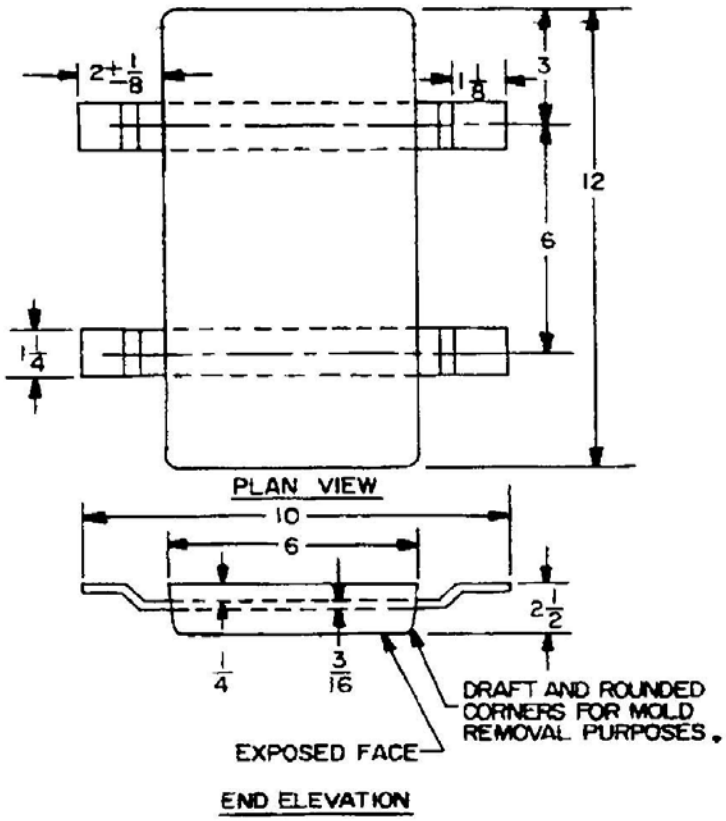

MINIMUM WEIGHT 41 POUNDS.

NOTES:

1. ANODE MAY BE CAST WITH STRAP IN THE UP OR DOWN POSITION. ALL DIMENSIONS (INCHES) REFER TO THE WIDER AND LONGER EDGES OF THE ANODES.
2. TOLERANCE PLUS OR MINUS 1/8.

FIGURE 5. Zinc hull slab (steel straps), type ZHS-42.

Downloaded from http://www.everyspec.com

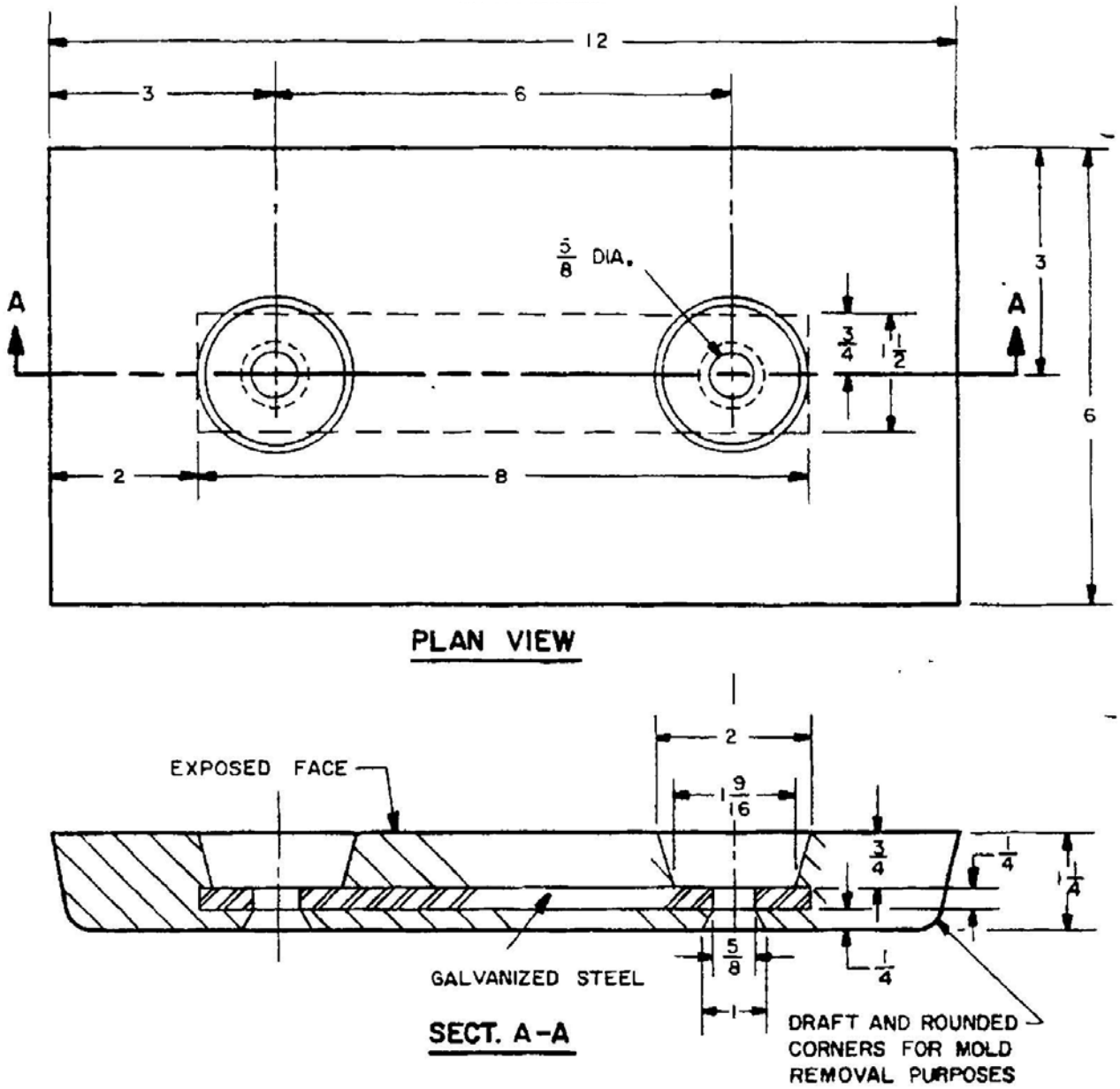

MINIMUM WEIGHT 20.4 POUNDS.

NOTES:

1. ANODE MAY BE CAST WITH EXPOSED FACE IN THE UP OR DOWN POSITION. ALL DIMENSIONS ARE IN INCHES.
2. TOLERANCE PLUS OR MINUS 1/8.

FIGURE 6. Zinc hull slab (core strap), type ZHC-23.

Downloaded from http://www.everyspec.com

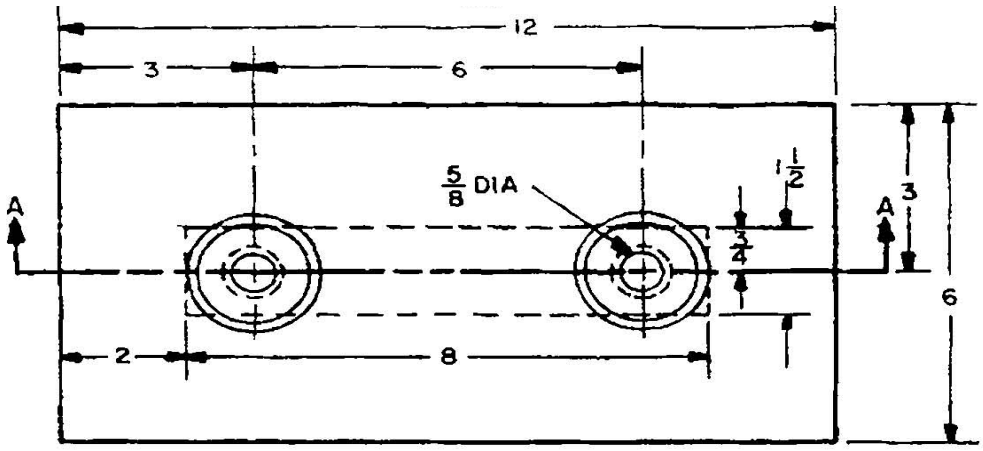

PLAN VIEW

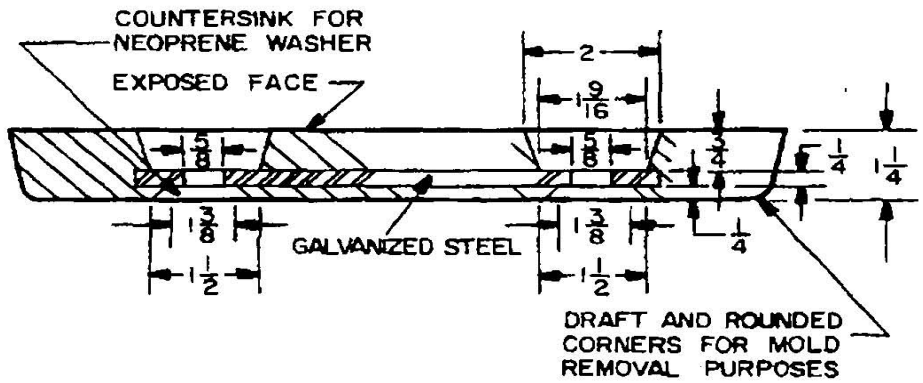

SECTION A-A

MINIMUM WEIGHT 20.4 POUNDS.

NOTES:

1. ANODE MAY BE CAST WITH EXPOSED FACE IN THE UP OR DOWN POSITION. ALL DIMENSIONS ARE IN INCHES.
2. TOLERANCE PLUS OR MINUS 1/8.

FIGURE 6A. Zinc hull slab (core strap), type ZHC-23, submarine application.

Downloaded from http://www.everyspec.com

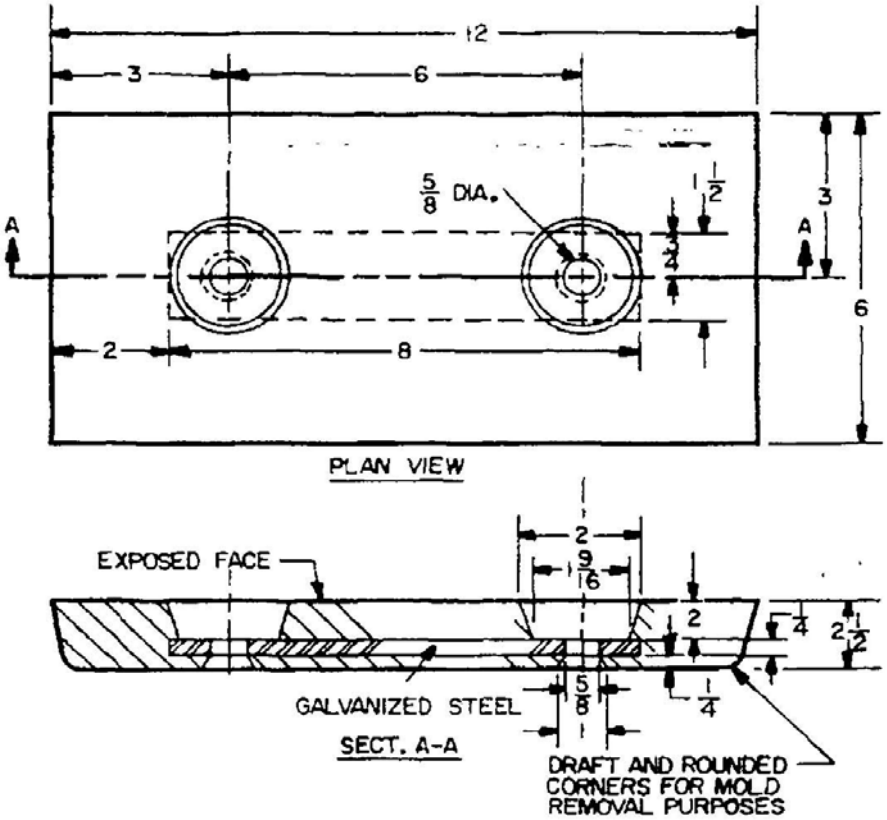

MINIMUM WEIGHT 39 POUNDS.

NOTES:

1. ANODE MAY BE CAST WITH EXPOSED FACE IN THE UP OR DOWN POSITION.
2. ALL DIMENSIONS ARE IN INCHES.
3. TOLERANCE PLUS OR MINUS 1/8.

FIGURE 7. Zinc hull slab (core strap), type ZHC-42.

Downloaded from http://www.everyspec.com

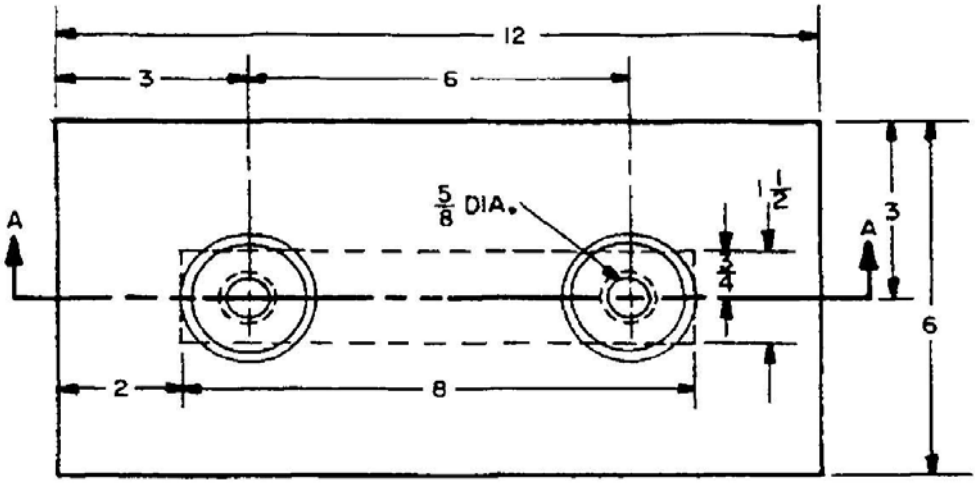

PLAN VIEW

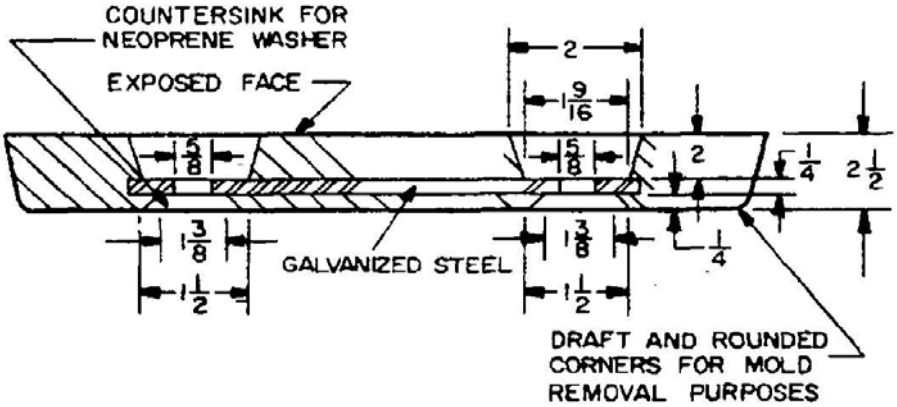

SECTION A-A

MINIMUM WEIGHT 39 POUNDS.

NOTES:

1. ANODE MAY BE CAST WITH EXPOSED FACE IN THE UP OR DOWN POSITION.
2. ALL DIMENSIONS ARE IN INCHES.
3. TOLERANCE PLUS OR MINUS 1/8.

FIGURE 7A. Zinc hull slab (core strap), type ZHC-42, submarine application.

Downloaded from http://www.everyspec.com

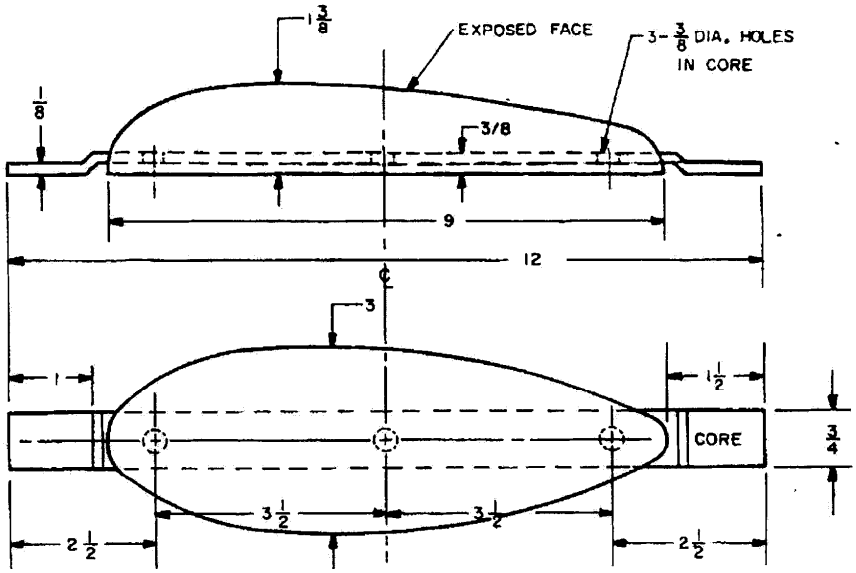

PLAN VIEW

APPROX. WT. 5 LBS.

NOTES:

1. ANODE MAY BE CAST WITH EXPOSED FACE IN THE UP OR DOWN POSITION. ALL DIMENSIONS ARE IN INCHES.
2. TOLERANCE PLUS OR MINUS 1/8.
3. When sectioned by a plane containing the anode centerline, the anode exposed face shall have the profile of a NACA 0033 airfoil as defined by NACA Technical Report 460.

FIGURE 8. Zinc, teardrop (steel strap), type ZTS.

Downloaded from http://www.everyspec.com

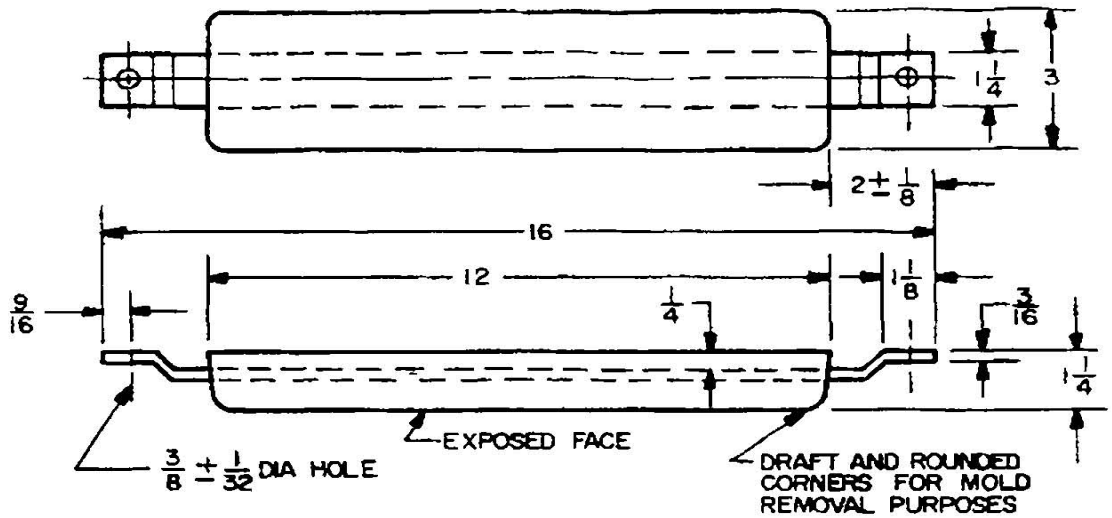

MINIMUM WEIGHT 11 POUNDS.

NOTE: ANODE MAY BE CAST WITH STRAP IN THE UP OR DOWN POSITION. ALL DIMENSIONS (INCHES) REFER TO THE WIDER AND LONGER DIMENSIONS OF THE ANODE. TOLERANCES OTHER THAN AS SHOWN WILL BE PLUS OR MINUS 1/8 INCH. MOUNTING HOLES IN STRAPS ARE OPTIONAL AND SHOULD BE SUPPLIED ONLY WHEN SPECIFIED.

(a) ZINC, SUBMARINE SLAB (STEEL STRAP), TYPE ZSS-12.

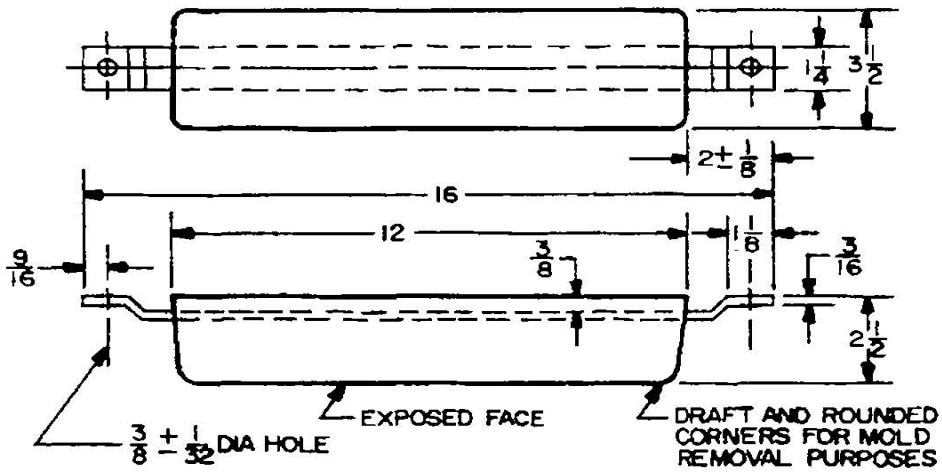

MINIMUM WEIGHT 21.5 POUNDS.

NOTE: ANODE MAY BE CAST WITH STRAP IN THE UP OR DOWN POSITION. ALL DIMENSIONS (INCHES) REFER TO THE WIDER AND LONGER DIMENSIONS OF THE ANODE. TOLERANCES OTHER THAN AS SHOWN WILL BE PLUS OR MINUS 1/8 INCH. MOUNTING HOLES IN STRAPS ARE OPTIONAL AND SHOULD BE SUPPLIED ONLY WHEN SPECIFIED.

(b) ZINC, SUBMARINE SLAB (STEEL STRAP), TYPE ZSS-24.

FIGURE 9. Zinc, submarine slab (steel strap).

Downloaded from http://www.everyspec.com

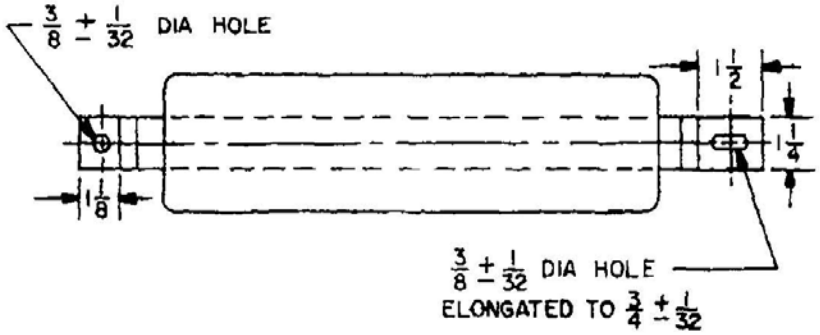

NOTES:

1. ALL DIMENSIONS ARE IN INCHES.
2. TOLERANCES OTHER THAN THOSE SHOWN SHALL BE PLUS OR MINUS 1/8.
3. THE ELONGATED STUD HOLE SHALL BE CENTERED 3/4 INCH FROM THE STRAP END.
4. THE OVERALL LENGTH OF THE ANODE SHALL BE 16-3/8 INCHES.
5. A MINIMUM OF 1/4 INCH OF STEEL SHALL SURROUND THE BOLT HOLES.
6. ALL OTHER DIMENSIONS ARE AS SHOWN ON FIGURE 9.

(c) Zinc, submarine slab (steel strap) with elongated strap end.

FIGURE 9. Zinc, submarine slab (steel strap). - Continued

Downloaded from http://www.everyspec.com

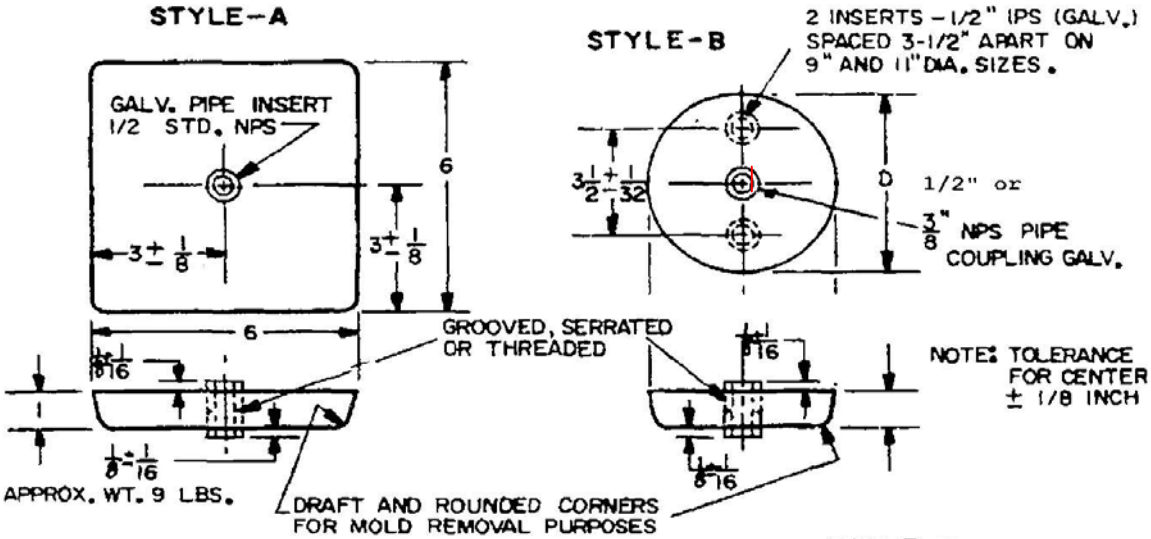

STYLE B

D = DIAMETER IN INCHES ± 1/8	APPROXIMATE WEIGHT (POUNDS)	SURFACE AREA (IN^2)
11	24	130
9	16	92
6	7.2	47
5	4.9	36
4	3.19	26
3	1.78	16
2	0.79	9

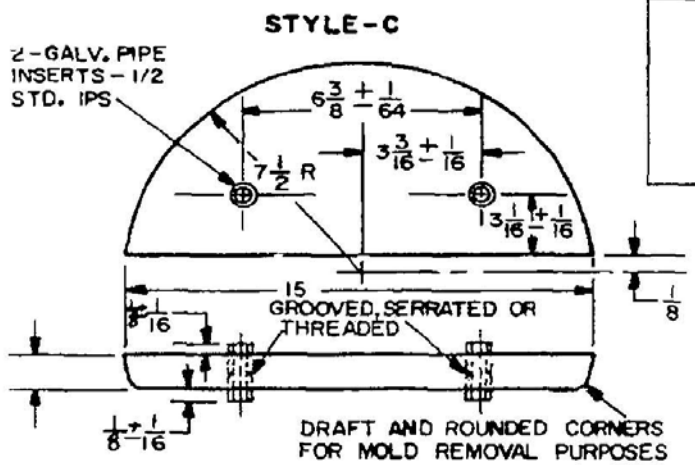

STYLE A - SQUARE SLAB
STYLE B - CIRCULAR SLAB
STYLE C - SEMI-CIRCULAR SLAB

APPROXIMATE WEIGHT 23 POUNDS.

'TES:

1. ALL DIMENSIONS ARE IN INCHES.
2. TOLERANCE OTHER THAN AS SHOWN WILL BE PLUS OR MINUS 1/8.

FIGURE 10. ZEP heat exchanger slab.

Downloaded from http://www.everyspec.com

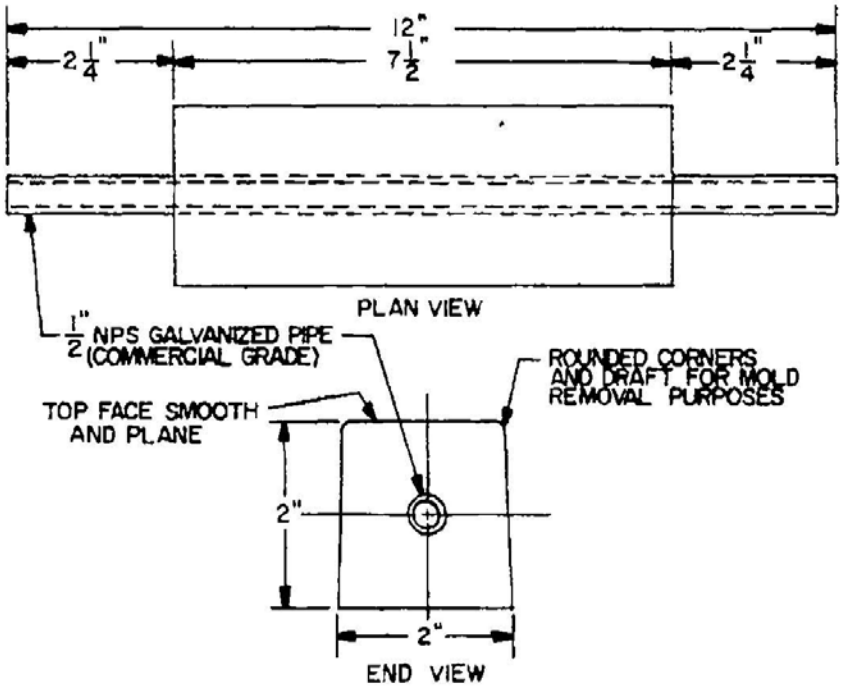

APPROXIMATE WEIGHT 8 POUNDS
UNIT OF PURCHASE – POUND
UNIT OF ISSUE – EACH

NOTES:

1. ALL DIMENSIONS (INCHES) REFER TO THE WIDER AND LONGER DIMENSIONS OF THE ANODE.
2. TOLERANCE PLUS OR MINUS 1/8.

FIGURE 11. Zinc, bar (pipe core), type ZBP.

Downloaded from http://www.everyspec.com

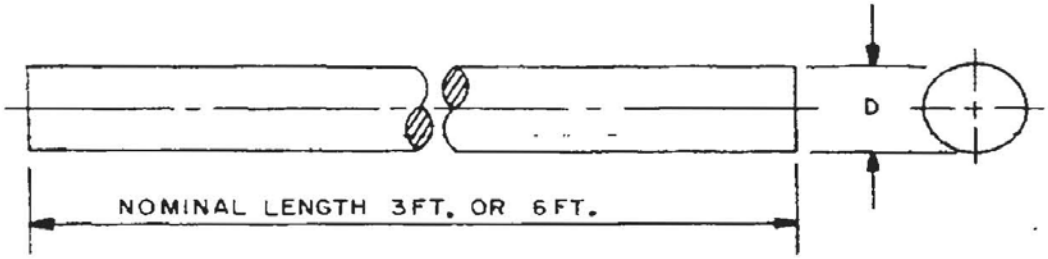

D = DIAMETER IN INCHES (NOMINAL)	IRON PIPE SIZE (INCHES)	APPROXIMATE WEIGHT PER FOOT (POUNDS)
0.405	1/8	0.39
0.540	1/4	0.70
0.675	3/8	1.11
0.840	1/2	1.68
1.050	3/4	2.52
1.315	1	4.12

FIGURE 12. Zinc, rod (no core), type ZRN.

Downloaded from http://www.everyspec.com

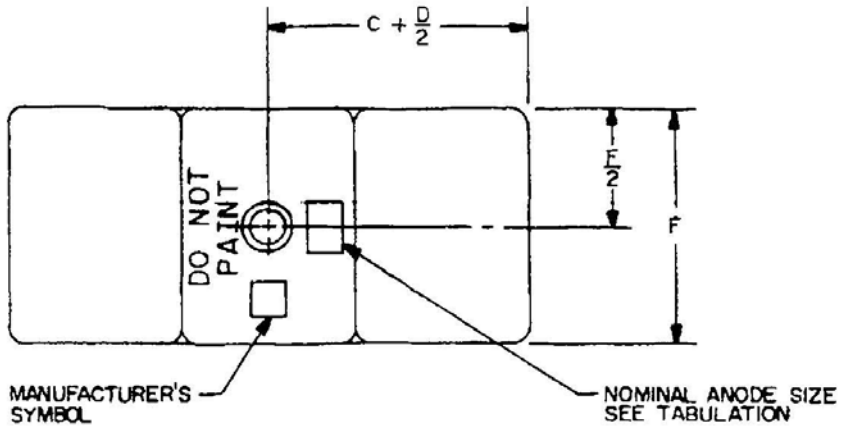

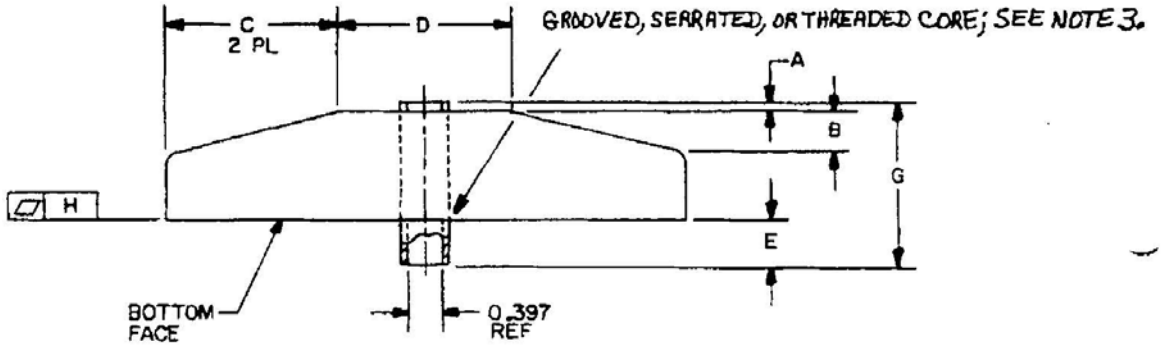

NOMINAL ANODE SIZE (INCH)	DIM. A +.06 −.03	DIM. B ±0.06	DIM. C ±0.06	DIM. D ±0.06	DIM. E +.12 −.00	DIM. F ±.06	DIM. G +.06 −.00	ANODE APPROXIMATE WEIGHT (OUNCES) REF	FLATNESS H
1 1/4	.06	.12	.50	1.50	.12	1.19	.58	4.5	.06
1 3/4	.06	.38	.62	2.00	.12	1.50	.91	12.7	.06
2	.06	.37	.75	2.00	.12	1.62	1.08	17.5	.06
2 1/4	.06	.37	.75	2.00	.30	1.75	1.20	22.0	.09
2 1/2	.06	.50	.75	2.00	.30	1.94	1.33	27.1	.09
2 3/4	.06	.50	1.00	2.00	.34	2.06	1.56	32.6	.09
3	.06	.50	1.25	2.00	.34	2.25	1.56	39.8	.12
3 1/2	.06	.50	1.75	2.00	.38	2.38	1.75	57.3	.12
4	.06	.50	2.00	2.00	.50	2.69	1.88	70.5	.12

NOTES:

1. FOR USE ON GRADE FM3 STUD LINK CHAIN.
2. EXTERIOR EDGES AND CORNER RADII OF CAST ANODE SHALL BE R.06 TO R.19.
3. PIPE CORE SHALL BE 9/16 INCH TUBING X 0.083 WALL CONFORMING TO ASTM A 513, TYPE 5 OR 3/8 INCH STANDARD SIZE PIPE CONFORMING TO ASTM A 53.

FIGURE 13. Zinc, mooring chain (pipe core or pipe bushing core), type ZMP.

Downloaded from http://www.everyspec.com

Custodians:
Navy – SH

Preparing Activity:
Navy – SH
(Project 5340-2008-002)

Review Activities:
Navy – OS, YD

NOTE: The activities listed above were interested in this document as of the date of this document. Since organizations and responsibilities can change, you should verify the currency of the information above using the ASSIST Online database at http://assist.daps.dla.mil.