INCH-POUND
MIL-PRF-87893B
15 January 1997
SUPERSEDING
MIL-W-87893A
29 July 1994

# PERFORMANCE SPECIFICATION
# WORKSTATION,
# ELECTROSTATIC DISCHARGE (ESD) CONTROL

This specification is approved for use by all
Departments and Agencies of the Department of Defense.

## 1. SCOPE

1.1 Scope. This specification covers electrical and construction requirements for ESD control workstations and components for use in applications where the protection of ESD sensitive (ESDS) items is required. ESDS items are defined and classified in MIL-STD-1686 (see 6.1.2).

1.2 Classification.

1.2.1 Types. The worksurfaces described in this specification should be the types in table I.

1.2.2 Identification dash number (IDN). The IDN for the ESD control workstations and components described in this document should be formulated in accordance with table A-I. The IDN is used in developing the part or identification number (PIN) described in 6.4.

Beneficial comments (recommendations, additions, deletions) and any pertinent data which may be of use in improving this document should be addressed to: ASC/ENSI, 2530 Loop Rd W, Wright-Patterson AFB, OH 45433-7101, by using the Standardization Document Improvement Proposal (DD Form 1426) appearing at the end of this document or by letter.

AMSC N/A FSC 4940

TABLE I. Worksurface types.

| TYPE | WORKSURFACE |
|---|---|
| I | RIGID |
| II | CUSHIONED |
| III | PORTABLE, FOLDABLE |

## 2. APPLICABLE DOCUMENTS

2.1 General. The documents listed in this section are specified in sections 3 and 4 of this specification. This section does not include documents cited in other sections of this specification or recommended for additional information or as examples. While every effort has been made to ensure the completeness of this list, document users are cautioned that they must meet all specified requirements documents cited in sections 3 and 4 of this specification, whether or not they are listed.

2.2 Government documents.

2.2.1 Specifications, standards and handbooks. The following specifications and standards form a part of this document to the extent specified herein. Unless otherwise specified, the issues of these documents are those listed in the issue of the Department of Defense Index of Specifications and Standards (DoDISS) and supplement thereto, cited in the solicitation (see 6.2).

SPECIFICATION

MILITARY

MIL-P-15024 - Plates, Tags and Bands for Identification of Equipment.

STANDARD

MILITARY

MIL-STD-130 - Identification Marking of US Military Property.

(Unless otherwise indicated, copies of federal and military specifications and standards are available from the Standardization Document Order Desk, Building 4D, 700 Robbins Avenue, Philadelphia, PA 19111-5094.)

2.3 Non-Government publications. The following documents form a part of this document to the extent specified herein. Unless otherwise specified, the issues of the documents which are DoD adopted are those listed in the issue of the DoDISS cited in the solicitation. Unless otherwise specified, the issues of documents not listed in the DoDISS are the issues of the documents cited in the solicitation (see 6.2).

AMERICAN SOCIETY FOR TESTING AND MATERIALS (ASTM)

ASTM F 150 - Electrical Resistance of Conductive Resilient Flooring (DoD Adopted)

(Application for copies should be addressed to the American Society for Testing and Materials, 100 Barr Harbor Dr., West Conshohocken, PA 19428-2959.)

2.4 Order of precedence. In the event of a conflict between the text of this document and the references cited herein, the text of this document takes precedence. Nothing in this document, however, supersedes applicable laws and regulations unless a specific exemption has been obtained.

3. REQUIREMENTS

3.1 Description. Each ESD control workstation shall consist of either a Type I, Type II or Type III worksurface; a common point ground system (CPGS) with a Type I or II termination; and a wrist strap consisting of two major components: an adjustable size wrist strap cuff and a five-or ten-foot wrist strap cord. Specific workstation components are listed in table A-I. Each workstation and component shall be constructed in accordance with 3.4 and shall meet the test requirements specified in section 4.

3.2 Qualification. The ESD control workstations and components furnished under this specification shall be products which are authorized by the qualifying activity for listing on the applicable qualified products list before contract award (see 4.3 and 6.3).

3.3 Material. Material shall be as specified herein. Acceptance or approval of any constituent material shall not be construed as a guarantee of the acceptance of the finished end product.

3.3.1 Recycled, recovered, or environmentally preferable materials. Recycled, recovered, or environmentally preferable materials should be used to the maximum extent possible provided that the material meets or exceeds the operational and maintenance requirements, and promotes economically advantageous life cycle costs.

3.3.2 Identification of materials and finishes. The contractor shall identify the specific material, finish or treatment for use with components and subcomponents, and shall make this information available, upon request, to the contracting officer or designated representative.

3.4 Construction. The ESD control workstation and components shall be constructed of components and subcomponents that are new, without defects and free of repairs.

3.4.1 ESD control worksurfaces.

3.4.1.1 Type I worksurface. Type I worksurfaces (see 6.1.3) shall be of any color constructed of rigid material having an average Shore D hardness in excess of 90 when tested in accordance with B.3.2.1.6. Two female ground snap fasteners shall be installed in each Type I worksurface as specified in 3.4.3.1. Dimensions and tolerances of the Type I worksurface and placement of the ground snap fasteners shall be as shown on figure 1.

3.4.1.2 Type II worksurface. Type II worksurfaces (see 6.1.4) shall be of any color constructed of cushioned material having an average Shore A hardness in excess of 45 and less than 85 when tested in accordance with B.3.2.1.6. Two female ground snap fasteners shall be installed in each Type II

worksurface as specified in 3.4.3.1. Dimensions and tolerances of the Type II worksurface and placement of the ground snap fasteners shall be as shown on figure 1. Thicknesses of those worksurfaces that possess a foam backing shall be measured in an uncompressed state.

3.4.1.2.1 Type II worksurface roll. Type II worksurface material rolls shall meet all requirements of 3.4.1.2 with the following exceptions. The worksurface shall be supplied in continuous rolls having a minimum length of 480 ± 0.5 inches and a width of 48 ± 0.5 inches. Forty uninstalled female ground snap fasteners, as specified in accordance with 3.4.3.1, shall be provided with each roll of Type II material. Material specified in 3.4.3.1.1 used to cover the bottom of the ground snap fasteners shall also be provided in sufficient quantity to cover forty fasteners.

3.4.1.3 Type III portable worksurface. Type III portable worksurfaces (see 6.1.5) shall be of any color constructed of a flexible material. The flexible material shall be such that it can be folded in quarters (fourths) for portability. It must retain this folded orientation indefinitely without evidence of reverting to its original, flat position. Two female ground snap fasteners shall be installed as specified in 3.4.3.1. Two pouches made of the same material as the worksurface shall be sewn onto the worksurface. The perimeter edge of the worksurface shall be reinforced. The reinforcement shall not extend beyond 0.375 inches of the edge of the worksurface. Thickness measurements of the worksurface shall be made, at any point other than the pouches or sewn outer seams. Dimensions, tolerances and location of the pouches and ground snap fasteners for Type III worksurfaces shall be as shown on figure 1.

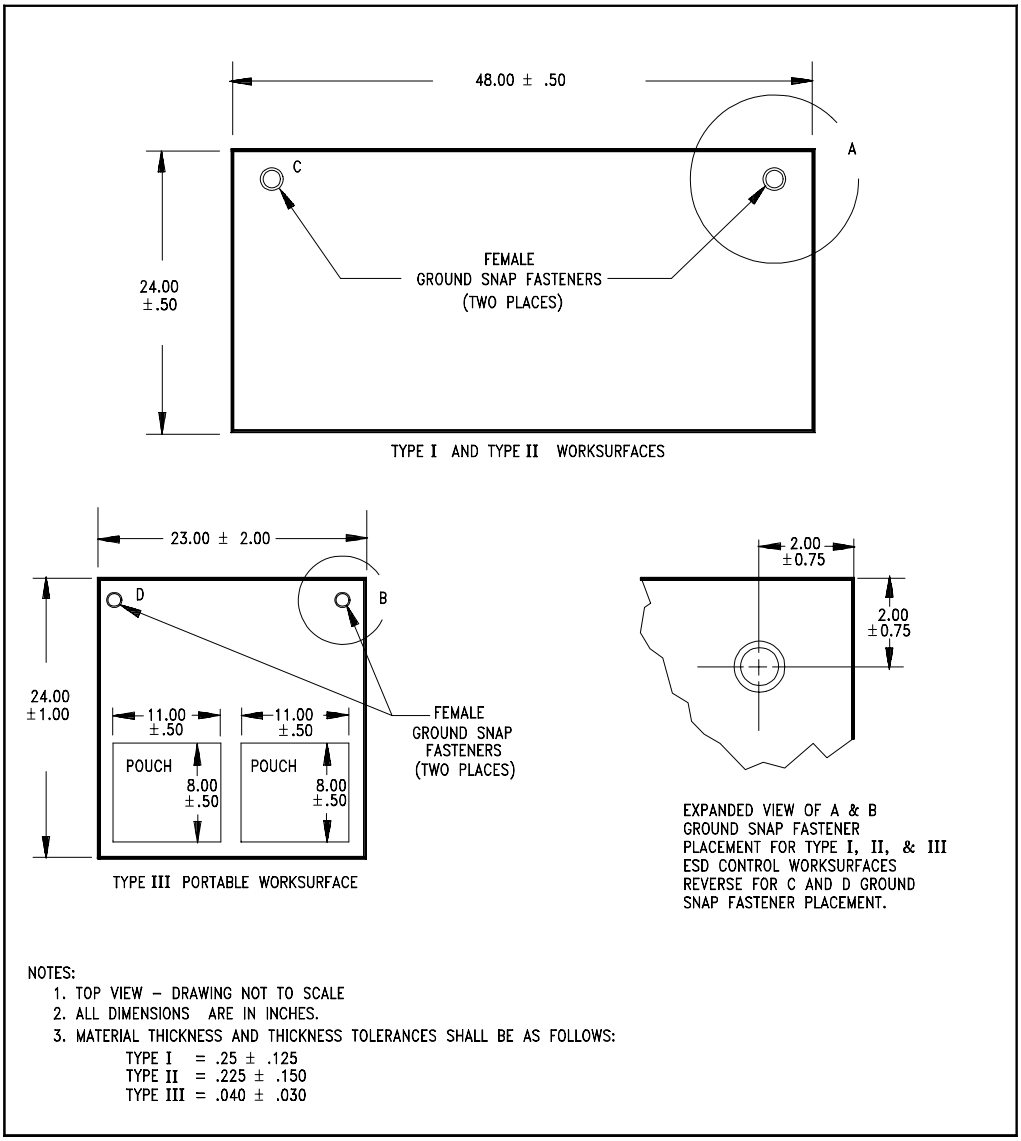


FIGURE 1. ESD control worksurface dimensions.

3.4.2 Type I, II and III worksurface resistance. Resistance requirements for worksurface top to ground snap fastener ($R_{TG}$), top to top ($R_{TT}$), ground snap fastener ($R_{GS}$) and snap fastener to snap fastener ($R_{SS}$) shall be as shown on figure 2.

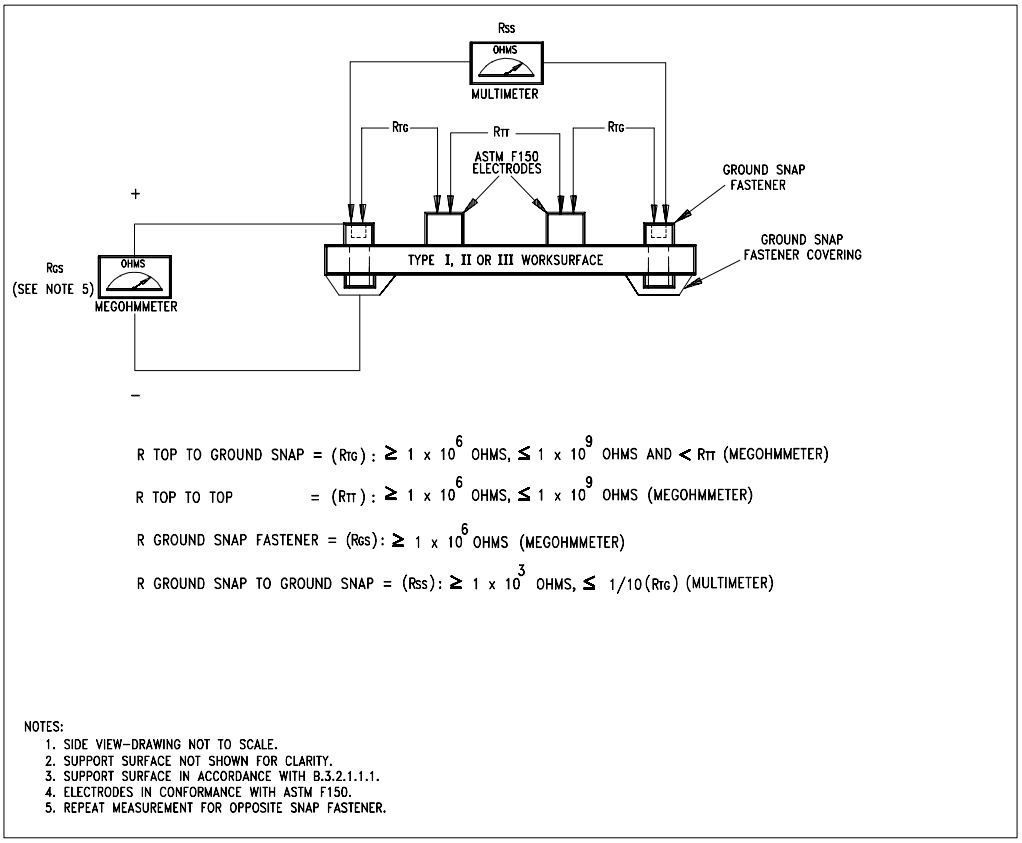


FIGURE 2. Summary of resistance measurements.

3.4.3 Interchangeability requirements. Each ESD control workstation and components of the same part or identification number shall be identical to the extent necessary to ensure interchangeability of component parts, accessories and spare parts.

3.4.3.1 Ground snap fasteners. The Type I, II and III worksurfaces shall have two non-oxidizing, metal female ground snap fasteners installed in the places shown on figure 1. Ground snap fasteners used on Type I, II and III worksurfaces shall have electrical continuity between the ground snap fastener and the worksurface. Ground snap fasteners for the Type III worksurface shall have metal teeth to ensure electrical continuity. Those portions of the ground snap fastener exposed on the bottom of the Type I, II and III worksurfaces shall be covered as specified in 3.4.3.1.1. The female ground snap fasteners shall have a diameter such that they mate with the 0.4 inch male snap of the common point ground system (CPGS) (see 3.4.3.2).

3.4.3.1.1 Ground snap fastener covering. After installation, the portion of the ground snap fastener exposed on the bottom of the worksurface shall be permanently covered such that the ground snap resistance ($R_{GS}$) requirement specified in 3.4.2 is met. Paper shall not be used for this purpose.

3.4.3.2 Common point ground system (CPGS). The CPGS shall contain a metal, non-oxidizing 0.4 inch male ground snap fastener that mates with the female ground snap fasteners specified in 3.4.3.1. No adapters shall be used to achieve the connection between the snap fasteners. Other components of the

CPGS include two banana jacks, an electrically insulative molded casing for the banana jacks and the male ground snap fastener, a strain relief from the casing for the ground cord, 15-foot ground cord and ground cord termination. Two different ground cord termination types are required for the CPGS. The Type I termination is a crimpable ring terminal and shall be used when the CPGS is supplied as part of the workstation kits with Type I or II worksurfaces (IDN's 01 and 02). The Type II termination is a clip termination and shall be used when the CPGS is supplied as part of the workstation kits with Type III worksurfaces (IDN 03). CPGS dimensions, tolerances and requirements shall be as shown on figure 3.

3.4.3.3 Adjustable size wrist strap cuff. The wrist strap cuff shall be made of a woven or knitted elastic fabric material (e.g. wool, cotton-poly blend, etc.) and shall be adjustable such that users having a variety of wrist sizes can wear it and maintain a snug fit. The wrist strap cuff shall have a resistance of between one and 10 megohms when tested as specified in B.3.2.2.1. The elasticity of the cuff shall be such that it can be easily mounted on the test apparatus when tested in accordance with B.3.2.2.1. Adjustability can be achieved by any means as long as one end of the elastic fabric material is mechanically fastened to a male snap plate assembly used to connect the cuff to the wrist strap cord. This male snap plate assembly shall consist of a non-oxidizing, metal male snap and snap plate that are mechanically and electrically fastened to each other. The snap plate contacts the skin of the user and the snap is used to connect the wrist strap cord. The outermost diameter of the male snap shall be 0.155 ± 0.005 inch and the minimum surface area of the snap plate shall be 0.6 square inch. All other portions of the male snap plate assembly shall be made of electrically insulative materials such that the only conductive item or material found on the exterior of the cuff, when worn, is the male snap. The overall width of the wrist strap cuff shall be between 0.5 and 1.0 inch.

3.4.3.4 Wrist strap cord. Five- or ten-foot length coiled wrist strap cords are required. Table A-I IDN's 01 and 02 require five-foot wrist strap cords; IDN 03 requires a 10-foot wrist strap cord. Wrist strap cord length measurements shall be made in accordance with B.3.2.2.3. A detachable alligator clip that mates with the banana plug termination of the wrist strap cord shall be provided with each wrist strap cord. The wrist strap cord construction, dimensions and tolerance requirements are specified on figure 4.

3.5 Identification marking. ESD control workstation components as listed in table A-I shall be permanently marked in accordance with MIL-STD-130 or alternate commercial marking practices meeting the permancy and legibility requirements of MIL-STD-130. The items to be marked, the required marking information, and marking techniques are specified below.

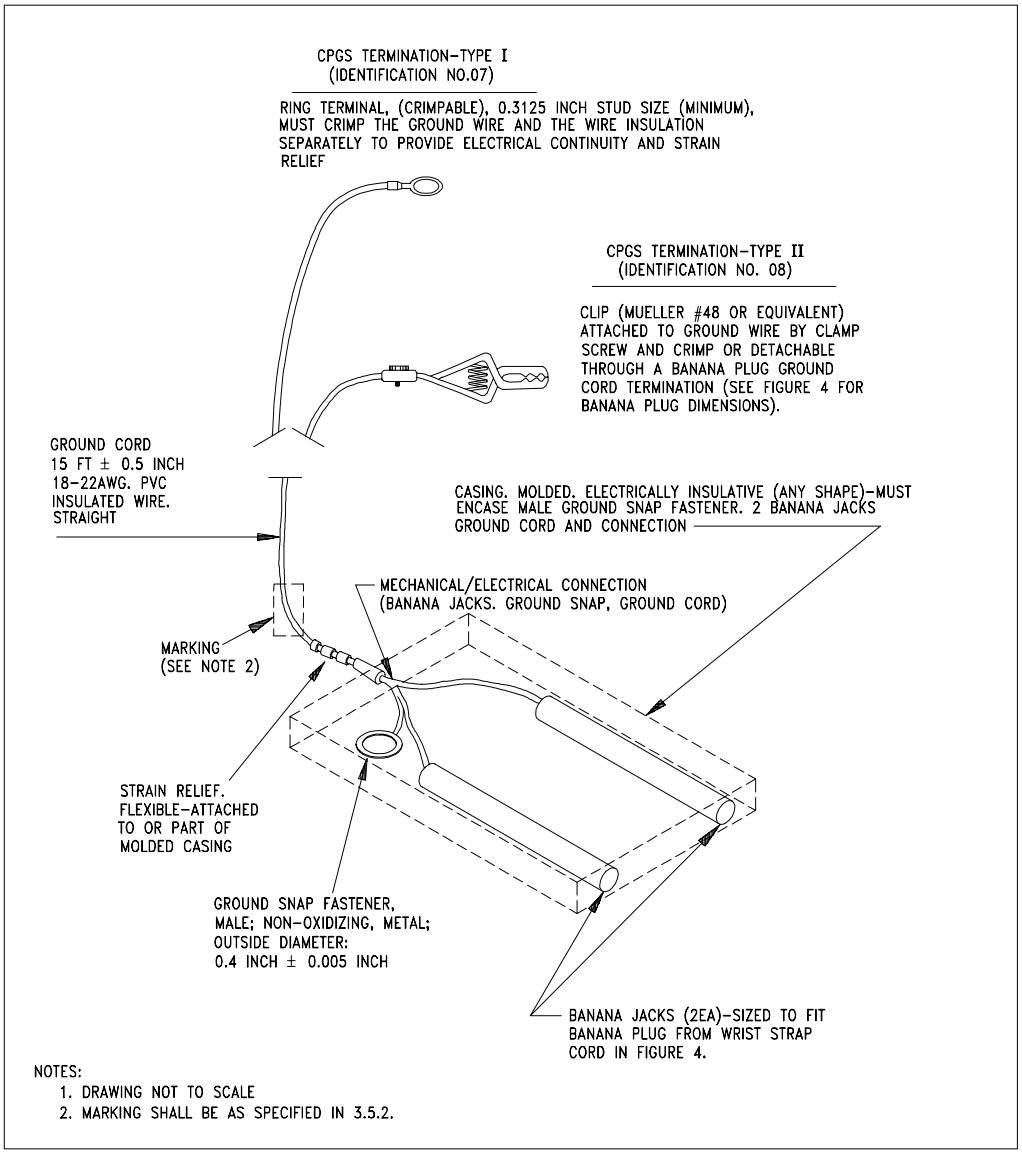


FIGURE 3. Common point ground system (CPGS).

3.5.1 Type I, II, and III worksurfaces. Each ESD control worksurface (Types I, II, and III) shall be marked in a location as specified in MIL-STD-130. The worksurfaces shall be marked with the part or identification number (PIN) specified in 6.4. For the Type II worksurface roll, the marking shall be done once on the first forty-eight (48) inches of roll length. The worksurfaces shall be marked using either the molded or electro-chemical etch method specified in Table I of MIL-STD-130 or alternate commercial marking practices to meet the permanency and legibility requirements of MIL-STD-130.

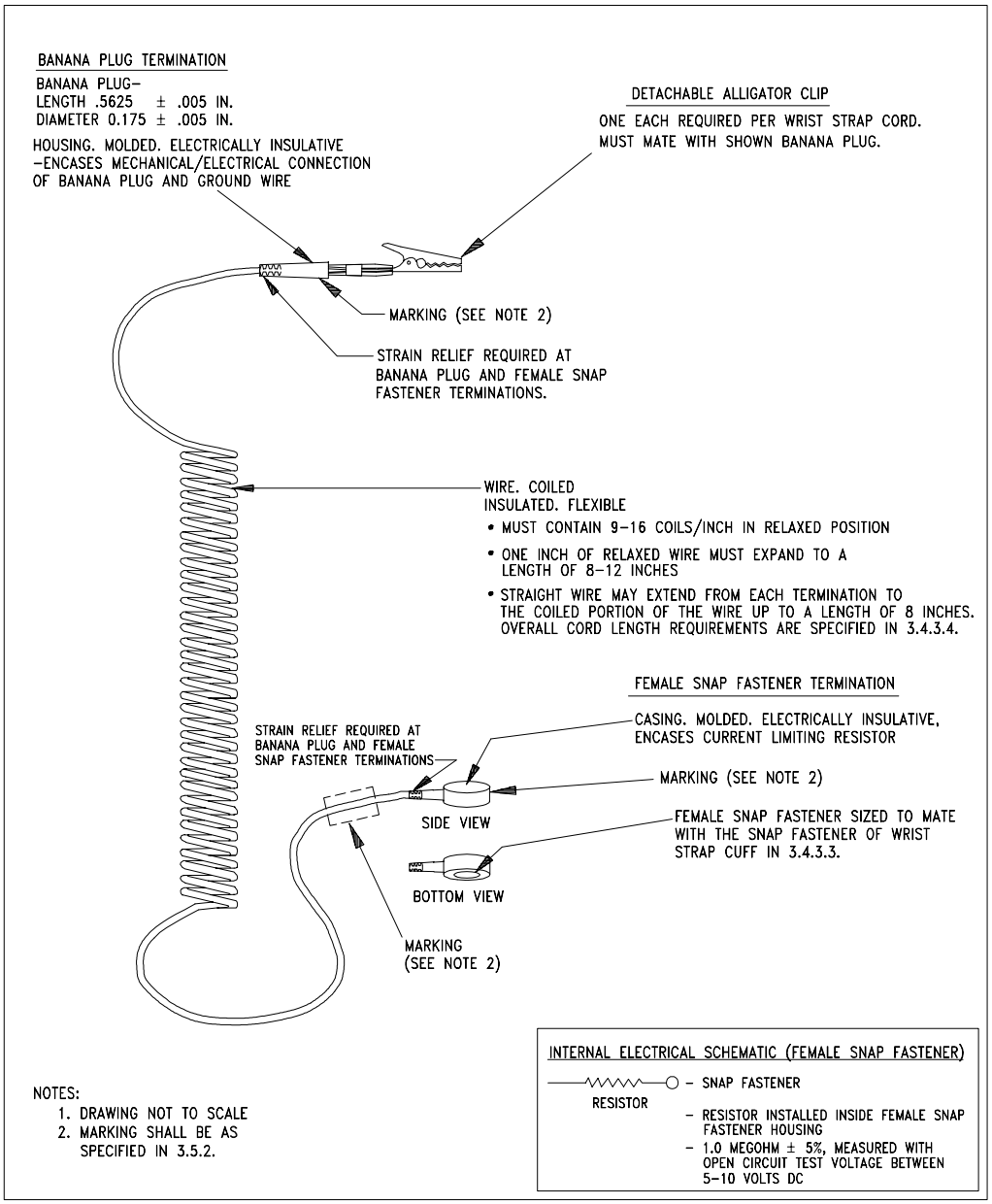


FIGURE 4. Wrist strap cord construction and wiring schematic.

3.5.2 Wrist strap cord (5-foot and 10-foot) and common point ground system. Each wrist strap cord (5-foot or 10-foot) and common point ground system shall be marked with the part or identification number (PIN) specified in 6.4 using any one of several marking methods. Heat shrinkable tubing, Type K2, as specified in MIL-P-15024 can be used. If this method is selected, the identification band shall be installed near the female snap fastener termination (see figure 4)
on the wrist strap cord and near the male ground snap fastener termination (see figure 3) on the CPGS. The length of the identification band shall be the minimum required to ensure legibility of the required

information and a snug fit after the heat shrink process. Engraving, electric arc pencil, electro-chemical etch or molding methods specified in Table 1 of MIL-STD-130 or alternate commercial marking can also be used as marking methods for the wrist strap cord and CPGS. If one of these marking methods is selected, the marking location for the CPGS is anywhere on the molded housing surrounding the male ground snap fastener (see figure 3). The marking location for the wrist strap cord when using one of these marking methods is on either of the molded housings at either wrist strap cord termination (see figure 4). All marked information shall be legible and permanent as defined in MIL-STD-130.

3.5.3 Wrist strap cuff. Each wrist strap cuff shall be marked with the part or identification number (PIN) specified in 6.4 either on the exposed (outer) surface of the male snap plate assembly or the snap plate that contacts the user's wrist (see 3.4.3.3). Each wrist strap cuff shall be marked using the engraving, electric arc pencil, electro-chemical etch or molding methods specified in Table I of MIL-STD-130 or alternate commercial marking practices. All marked information shall be legible and permanent as defined in MIL-STD-130.

## 4. VERIFICATION

4.1 Classification of inspection. The inspection requirements specified herein are classified as follows:

a. Qualification inspection (see 4.3).

b. Quality conformance inspection (see 4.4).

4.2 Inspection conditions. Unless otherwise specified, all inspections shall be performed in accordance with the test conditions specified in the test methods provided in Appendix B.

4.3 Qualification inspection. Qualification inspection shall be performed on one ESD control workstation or components thereof. All qualification samples shall be subjected to the examinations of 4.6, the pretest/test preparations specified in B.3.1 and C.5, and the tests specified in 4.7. The presence of any defect or failure of any test shall be cause for rejection of the qualification sample.

4.4 Quality conformance inspection. Unless otherwise specified in the contract or purchase order (see 6.2), quality conformance inspection shall be performed on the samples selected in accordance with 4.5. Quality conformance inspection shall consist of two parts. The first is the examinations required in 4.6, subject to approval by a Government representative. The second is the pretest/test preparations and tests conducted by a Government test facility within the specified time frame.

4.5 Sampling. One ESD control workstation or components thereof shall be selected at random per 500 purchased for sample testing. When less than 500 workstations or components thereof are purchased, one sample shall be selected at random for sample testing.

4.6 Examinations. Each ESD control workstation and components thereof shall be examined for compliance with the requirements specified in section 3 of this specification. Examinations shall consist of inspecting for the defects specified in table II by a Government representative.

TABLE II. Examination defects.

| Defect | Applicable requirement and reference |
|---|---|
| 101. Material not as specified. | 3.3 |
| 102. Contractor does not have documentation available for identification of material, material finishes or treatment. | 3.3.2 |
| 103. Used, rebuilt or remanufactured components and parts incorporated in each ESD control workstation or components thereof. | 3.4 |
| 104. Dimensions and tolerances of Type I, II or III worksurfaces or Type II worksurface roll not as specified. Ground snap fasteners not as specified. Pouches of Type III worksurface not as specified. | 3.4.1.1<br>3.4.1.2<br>3.4.1.2.1<br>3.4.1.3<br>Figure 1 |
| 105. Ground snap fasteners not as specified. | 3.4.3.1 |
| 106. Common point ground system not as specified. | 3.4.3.2<br>Figure 3 |
| 107. Wrist strap cuff construction, dimensions, and tolerances not as specified. | 3.4.3.3 |
| 108. Wrist strap cord construction, dimensions, tolerances and attachments not as specified. | 3.4.3.4<br>Figure 4 |
| 109. Identification marking not as specified. | 3.5 |

4.7 Tests. Each ESD control workstation and components thereof shall be examined and tested for compliance with the requirements in this specification. The examinations and tests required of each workstation and components are listed in table B-I.

## 5. PACKAGING

5.1 Packaging. For acquisition purposes, the packaging requirements shall be as specified in the contract or order (see 6.2). When actual packaging of material is to be performed by DoD personnel, these personnel need to contact the responsible packaging activity to ascertain requisite packaging requirements. Packaging requirements are maintained by the Inventory Control Point's packaging activity within the Military Department or Defense Agency, or within the Military Department's System Command. Packaging data retrieval is available from the managing Military Department's or Defense Agency's automated packaging files, CD-ROM products, or by contacting the responsible packaging activity.

6. NOTES

(This section contains information of a general or explanatory nature which may be helpful, but is not mandatory.)

6.1 Intended use. The ESD control workstations and components covered by this specification are intended for use in a variety of military maintenance operations. This includes some clean room applications, flight line or field maintenance, and test/repair work (see 6.1.1). All types are used for ESD protection of military electronic parts, assemblies and equipment. The resistance requirements discussed in this specification were selected to ensure that the ESD control workstations and components effectively dissipate static charges from conductive or dissipative materials placed upon the Type I, II, or III worksurfaces.

6.1.1 Personnel safety. Personnel safety is of principal importance. Users of items provided under this specification should consider the safety guidelines of MIL-HDBK-454, Guideline 1. Personnel exposure to current levels should be limited to the perception level as shown in MIL-HDBK-454, Guideline 1. The wrist strap cords and associated resistor (see figure 4) provided under this specification provide current limiting capability for voltages not exceeding 1,000 VAC (25 Hz - 400 Hz) or 4,000 VDC only when there is no parallel path to ground between personnel and ground.

6.1.2 ESD sensitive (ESDS) items. MIL-STD-1686, "Electrostatic Discharge Control Program for Protection of Electrical and Electronic Parts, Assemblies and Equipment (Excluding Electrically Initiated Explosive Devices)" defines ESD sensitive items.

6.1.3 Workstation (IDN 01). This type of ESD control workstation contains a rigid Type I worksurface which may be suitable for use in rough or harsh environments. In addition, the hardness of the surface and its relative resistance to abrasion may make it suitable for clean room use. This should be verified before use by appropriate clean room requirements personnel .

6.1.4 Workstation (IDN 02). This type of ESD control workstation contains a cushioned Type II worksurface which can be used in all areas other than clean rooms and laminar flow booths where ESD sensitive items are handled. The worksurface is cushioned and inherently offers some physical shock protection should an ESD sensitive item be dropped or bumped against it.

6.1.5 Workstation (IDN 03). This type of ESD control workstation contains a portable Type III worksurface intended for use in situations where other ESD control workstations are not available or feasible for use. It provides a portable means of handling ESD sensitive items by military personnel during remote maintenance, test, repair or diagnostic operations.

6.2 Acquisition requirements. Acquisition documents must specify the following:

a. Title, number and date of the specification.

b. Issue of DODISS to be cited in the solicitation, and if required, the specific issue of individual documents referenced (see 2.2.1, 2.3, B.2.1 and C.2.1.1).

c. Part or identification number (PIN) (see 6.4 and Appendix A).

d. When quality conformance is required (see 4.4).

e. Location where quality conformance will be performed (see 4.4).

f. When the contractor will conduct examinations and tests (see 4.6 and 4.7).

g. Time frame required for submission of quality conformance samples (see 4.4).

h. Packaging requirements (see 5.1).

6.3 Qualification. With respect to products requiring qualification, awards will be made only for products which are, at the time of award of contract, qualified for inclusion in Qualified Products List QPL No. 87893 whether or not such products have actually been listed by that date. The attention of the contractors is called to these requirements, and manufacturers are urged to arrange to have the products that they propose to offer to the Federal Government tested for qualification in order that they may be eligible to be awarded contracts or purchase orders for the products covered by this specification. Information pertaining to qualification of products may be obtained from Wright Laboratories, Materials Integrity Branch (WL/MLSA), Building 653, 2179 Twelfth Street, Suite 1, Wright-Patterson AFB, OH 45433-7718.

6.4 Part or identification number (PIN). The PIN to be used to identify each ESD Control workstation and components acquired using this specification are created as follows:

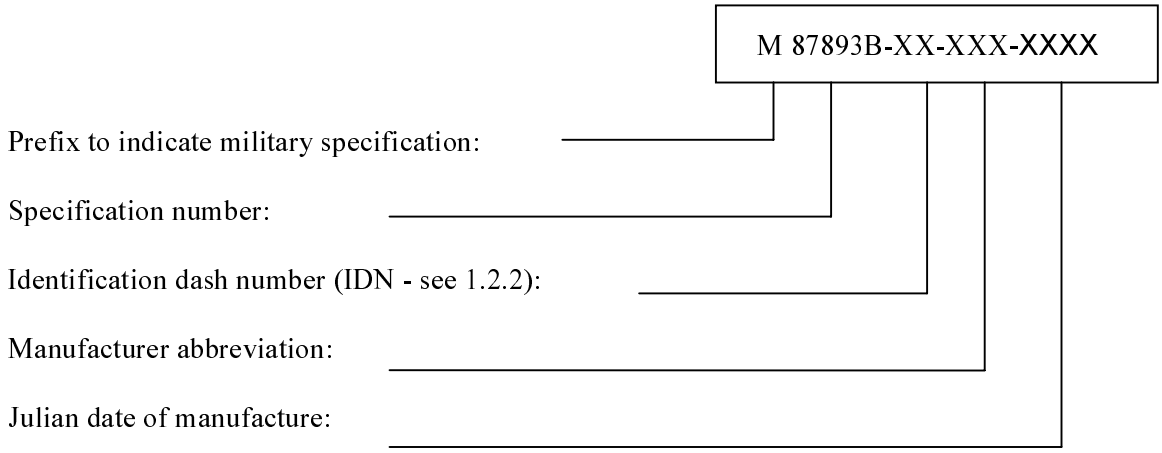


6.5 Subject term (key word) listing.

Adjustable size wrist strap cuff
Common point ground system
ESD Control worksurface
Wrist strap
Wrist strap cord

6.5 Changes from previous issue. Marginal notations are not used in this revision to identify changes with respect to the previous issue due to the extent of the changes.

Custodians:
Army - CR
Navy - SH
Air Force - 11

Review Activities:
Army - MD-1, SM
Navy - MC
Air Force - 10, 17, 70, 71, 82, 84, 99
DLA - CS

Preparing Activity:
Air Force - 11

(Project 4940-0687)

# APPENDIX A

## IDENTIFICATION DASH NUMBER

## A.1 SCOPE

A.1.1 Scope. This appendix lists the components and national stock numbers of IDN's for ESD control workstations for use by Department of Defense personnel (see table A-I). This appendix is a mandatory part of this specification. The information contained herein is intended for compliance.

TABLE A-I. ESD control workstation identification dash numbers (IDN).

| Item Description | | IDN |
|---|---|---|
| Workstation, ESD control.<br>Contains one of each of the following: Type I worksurface, CPGS (with Type I termination), adjustable size wrist strap cuff and five-foot wrist strap cord | NSN 4940-01-250-4235 | 01 |
| Workstation, ESD control.<br>Contains one of each of the following: Type II worksurface, CPGS (with Type I termination), adjustable size wrist strap cuff and five-foot wrist strap cord | NSN 4940-01-250-4236 | 02 |
| Workstation, ESD control, portable.<br>Contains one of each of the following: Type III worksurface, CPGS (with Type II termination), adjustable size wrist strap cuff and ten-foot wrist strap cord | NSN 4940-01-250-4237 | 03 |
| Type I worksurface | NSN 4940-01-269-0443 | 04 |
| Type II worksurface | NSN 4940-01-269-0444 | 05 |
| Type III portable worksurface | NSN 4940-01-269-0445 | 06 |
| Common point ground system (with Type I termination) | NSN 4940-01-270-5875 | 07 |
| Common point ground system (with Type II termination) | NSN 4940-01-349-0306 | 08 |
| Wrist strap cord, five-foot | NSN 4940-01-274-0486 | 09 |
| Wrist strap cord, ten-foot | NSN 4940-01-274-0487 | 10 |
| Adjustable size wrist strap cuff | NSN 4940-01-274-0485 | 11 |
| Adjustable size wrist strap cuff and five-foot wrist strap cord | NSN 4940-01-270-0442 | 12 |
| Adjustable size wrist strap cuff and ten-foot wrist strap cord | NSN 4940-01-187-2267 | 13 |
| Type II worksurface roll | NSN 4940-01-279-4608 | 14 |

# TEST METHODS

## B.1 SCOPE

B.1.1 Scope. This appendix contains the test methods used in conducting ESD control workstation tests, with the exception of the worksurface charge dissipation test which is covered in Appendix C. This appendix is a mandatory part of the specification. The information contained herein is intended for compliance.

## B.2 APPLICABLE DOCUMENTS

B.2.1 Non-Government publications. The following documents form a part of this document to the extent specified herein. Unless otherwise specified, the issues of the documents which are DoD adopted are those listed in the issue of the DoDISS cited in the solicitation. Unless otherwise specified, the issues of documents not listed in the DoDISS are the issues of the documents cited in the solicitation (see 6.2).

AMERICAN SOCIETY FOR TESTING AND MATERIALS (ASTM)

ASTM D 2240 - Rubber Property - Durometer Hardness

(Application for copies should be addressed to the American Society for Testing and Materials, 100 Barr Harbor Dr., West Conshohocken, PA 19428-2959.)

## B.3 TEST METHODS

B.3.1 Pretest/test preparations.

B.3.1.1 Sample pretest cleaning. The test specimens and test electrodes shall be cleaned twice with a minimum 70% isopropanol-water solution using a clean lint-free cloth each time. Cleaning shall be done prior to the preconditioning requirement of B.3.1.2. Pretest cleaning is not necessary for the common point ground system, wrist strap cord or wrist strap cuff, even when they are part of IDN's 01, 02 or 03.

B.3.1.2 Sample preconditioning and testing. Type I, II and III worksurfaces, Type II worksurface rolls and wrist strap cuffs require preconditioning prior to testing. Sample preconditioning and testing shall be done in a desiccating or environmental chamber under two different environmental conditions. The first is to precondition the samples in the specified chamber for 48 hours at 10 ± 2% Relative Humidity (RH) and 70 ± 2$^{o}$ F prior to testing the samples in the same environment. The second is to precondition the samples in the specified chamber at 50 ± 2% RH and 70 ± 2$^{o}$ F for 48 hours prior to testing in the same environment. The chamber must be of ample size to accommodate the test specimens and test surfaces specified herein. The tests required in B.3.2.1.6, B.3.2.2.1, B.3.2.2.2, B.3.2.2.3 and B.3.2.2.4 are not required to be performed under controlled environmental conditions. The ambient relative humidity for these tests shall be recorded.

B.3.2 Tests. Each ESD control workstation and its components shall be examined and tested for compliance with the requirements specified in section 3 of this specification. The examinations and tests required of each workstation and components are defined in table B-I and are listed by identification dash number (see table A-I).

B.3.2.1 ESD control worksurface tests.

B.3.2.1.1. Electrical resistance. The electrical resistance measurements specified in B.3.2.1.2, B.3.2.1.3 and B.3.2.1.4 shall be made using the megohmmeter and electrodes specified in table B-II. The resistance measurements required in B.3.2.1.2 and B.3.2.1.3 shall be made using open circuit test voltages of 100 and 10 volts. The resistance measurements required in B.3.2.1.4 shall be made using an open circuit test voltage of 100 volts only. The resistance measurement required in B.3.2.1.5 shall be made using the multimeter specified in table B-II. All resistance measurements shall be made within 15 seconds of applying the test voltage. A summary of the required resistance values is included on figure 2.

B. 3.2.1.1.1 Support surface. All resistance measurements, unless otherwise specified, shall be made on a non-conductive ($>10^{12}$ ohms) electrically neutral support surface with minimum dimensions of 4 feet x 2 feet. The resistance of this support surface shall be measured using an open circuit test voltage of 100 volts. A megohmmeter, electrode and non-oxidizing metal sheet outlined in table B-II shall be used to make the resistance measurement. The resistance measurement is made by placing the support surface on the metal sheet and the electrode on top of the support surface and applying the test voltage between the electrode and the metal sheet.

B.3.2.1.2 Total resistance from top to ground snap - $R_{TG}$. A total of 20 resistance measurements shall be taken for each type worksurface tested. Figure 5 shows the measurement points. The following measurements shall be made using an open circuit test voltage of 100 volts and then repeated using an open circuit test voltage of 10 volts. Five individual resistance measurements shall be taken by connecting the megohmmeter as shown on figure 5 and rotating the electrode to each of the five measurement positions on the left side of the worksurface. For Type III worksurfaces, the lowermost two measurements shall be made with the electrode placed on the left pouch. Five additional resistance measurements shall be taken by connecting the sensor lead to the opposite ground snap fastener and moving the electrode to each of the five measurement positions on the right side of the worksurface. For Type III worksurfaces, the lowermost two measurements shall be made with the electrode placed on the right pouch. The calculated average of the 20 readings shall fall within the specified resistance range and will be used as pass/fail criteria for $R_{TG}$. The calculated average $R_{TG}$ shall be less than the $R_{TT}$ ($<R_{TT}$) value (see B.3.2.1.3). In addition, no individual reading shall fall below $1 \times 10^6$ ohms. Electrode to ground snap fastener spacing for the three types of worksurfaces shall be as defined on figure 5.

TABLE B-I. Examinations and tests.

| IDN | 01 | 02 | 03 | 04 | 05 | 06 | 07 | 08 | 09 | 10 | 11 | 12 | 13 | 14 |
|---|---|---|---|---|---|---|---|---|---|---|---|---|---|---|
| Table II Examination Defects | | | | | | | | | | | | | | |
| 101 | • | • | • | • | • | • | • | • | • | • | • | • | • | • |
| 102 | • | • | • | • | • | • | • | • | • | • | • | • | • | • |
| 103 | • | • | • | • | • | • | • | • | • | • | • | • | • | • |
| 104 | • | • | • | • | • | • | | | | | | | | • |
| 105 | • | • | • | • | • | • | | | | | | | | • |
| 106 | • | • | • | | | | • | • | | | | | | |
| 107 | • | • | • | | | | | | | | • | • | • | |
| 108 | • | • | • | | | | | | • | • | | • | • | |
| 109 | • | • | • | • | • | • | • | • | • | • | • | • | • | • |
| Test Paragraphs | | | | | | | | | | | | | | |
| B.3.1.1 | • | • | • | • | • | • | | | | | | | | • |
| B.3.1.2 | • | • | • | • | • | • | | | | | • | • | • | • |
| B.3.2.1.1 | • | • | • | • | • | • | | | | | | | | • |
| B.3.2.1.2 | • | • | • | • | • | • | | | | | | | | • |
| B.3.2.1.3 | • | • | • | • | • | • | | | | | | | | • |
| B.3.2.1.4 | • | • | • | • | • | • | | | | | | | | • |
| B.3.2.1.5 | • | • | • | • | • | • | | | | | | | | • |
| B.3.2.1.6 | • | • | • | • | • | | | | | | | | | • |
| B.3.2.2.1 | • | • | • | | | | | | • | • | • | • | • | |
| B.3.2.2.2 | • | • | • | | | | | | • | • | • | • | • | |
| B.3.2.2.3 | • | • | • | | | | | | • | • | • | • | • | |
| B.3.2.2.4 | • | • | • | | | | | | • | • | • | • | • | |
| C.4 | • | • | • | • | • | • | | | | | | | | • |
| C.5 | • | • | • | • | • | • | | | | | | | | • |
| C.6 | • | • | • | • | • | • | | | | | | | | • |
| C.7 | • | • | • | • | • | • | | | | | | | | • |

NOTES:
1: • = required
2: Pretest cleaning is not necessary for the CPGS, wrist strap cord or wrist strap cuff, even when they are part of IDNs 01, 02 or 03; and preconditioning is not required for the CPGS and wrist strap cord.

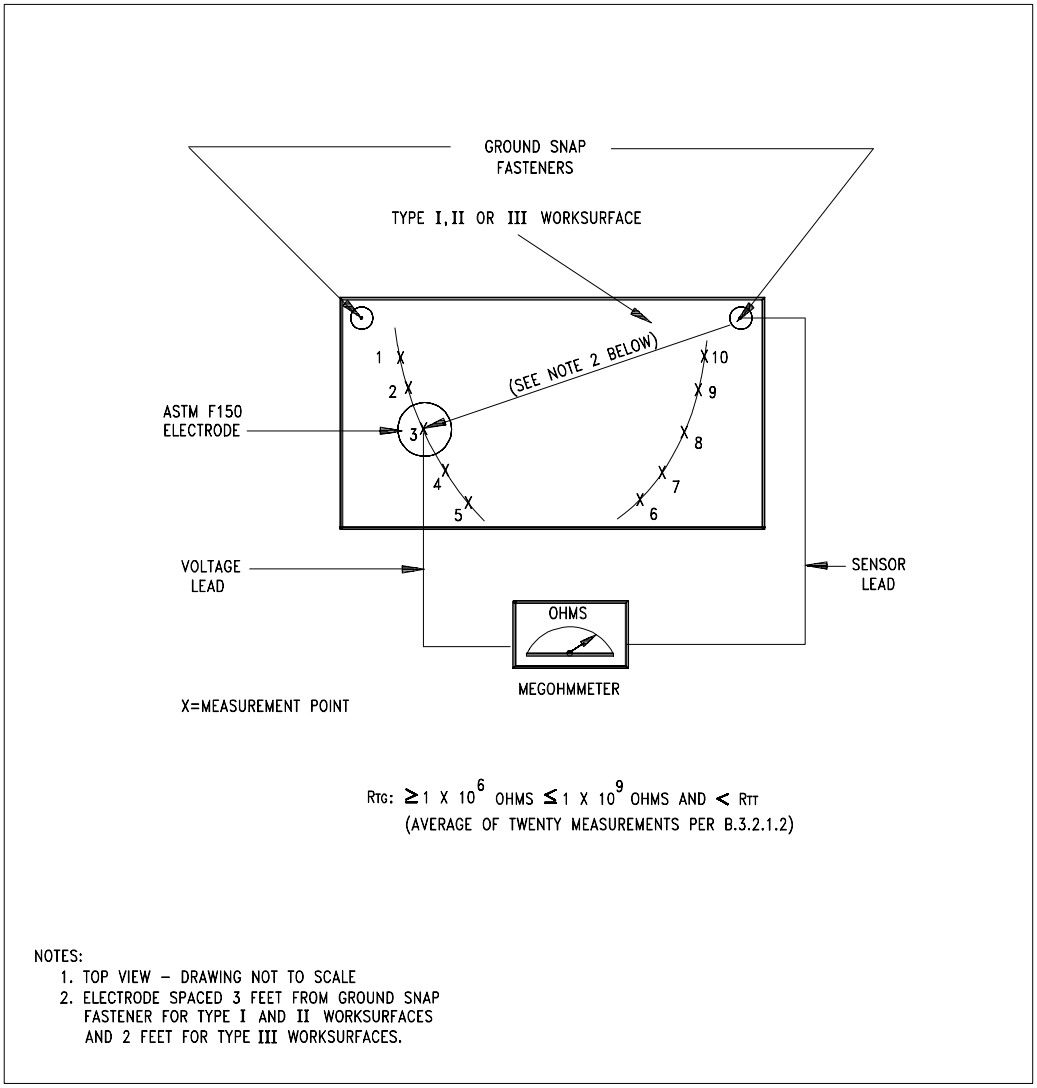


FIGURE 5. $R_{TG}$ (Resistance top to ground snap) measurement.

B.3.2.1.3 Total resistance between two locations on the top surface - $R_{TT}$. A total of 20 resistance measurements shall be taken for each type worksurface tested. Figure 6 shows the measurement points. The following measurements shall be made using an open circuit test voltage of 100 volts and then repeated using an open circuit test voltage of 10 volts. Five individual resistance measurements shall be taken by connecting the megohmmeter as shown on figure 6, placing the left electrode on the center measurement point shown on the left side of the worksurface and rotating the right electrode to each of the five shown measurement points. For Type III worksurfaces, these five measurements shall be made with the stationary electrode located on the worksurface above and not touching the left pouch and the lowermost two measurements conducted with the rotated electrode completely on the pouch. Five additional resistance measurements shall be taken by placing the right electrode on the center measurement

point shown on the right side of the worksurface and rotating the left electrode to each of the five shown measurement points. For Type III worksurfaces, these five measurements shall be made with the stationary electrode located on the worksurface above and not touching the right pouch and the lowermost two measurements conducted with the rotated electrode completely on the pouch. The voltage lead shall always be connected to the rotated electrode. The calculated average of the 20 readings shall fall within the specified resistance range and will be used as pass/fail criteria for $R_{TT}$. In addition, no individual reading shall fall below $1 \times 10^6$. Electrode to electrode spacing for the three types of worksurfaces shall be as defined on figure 6.

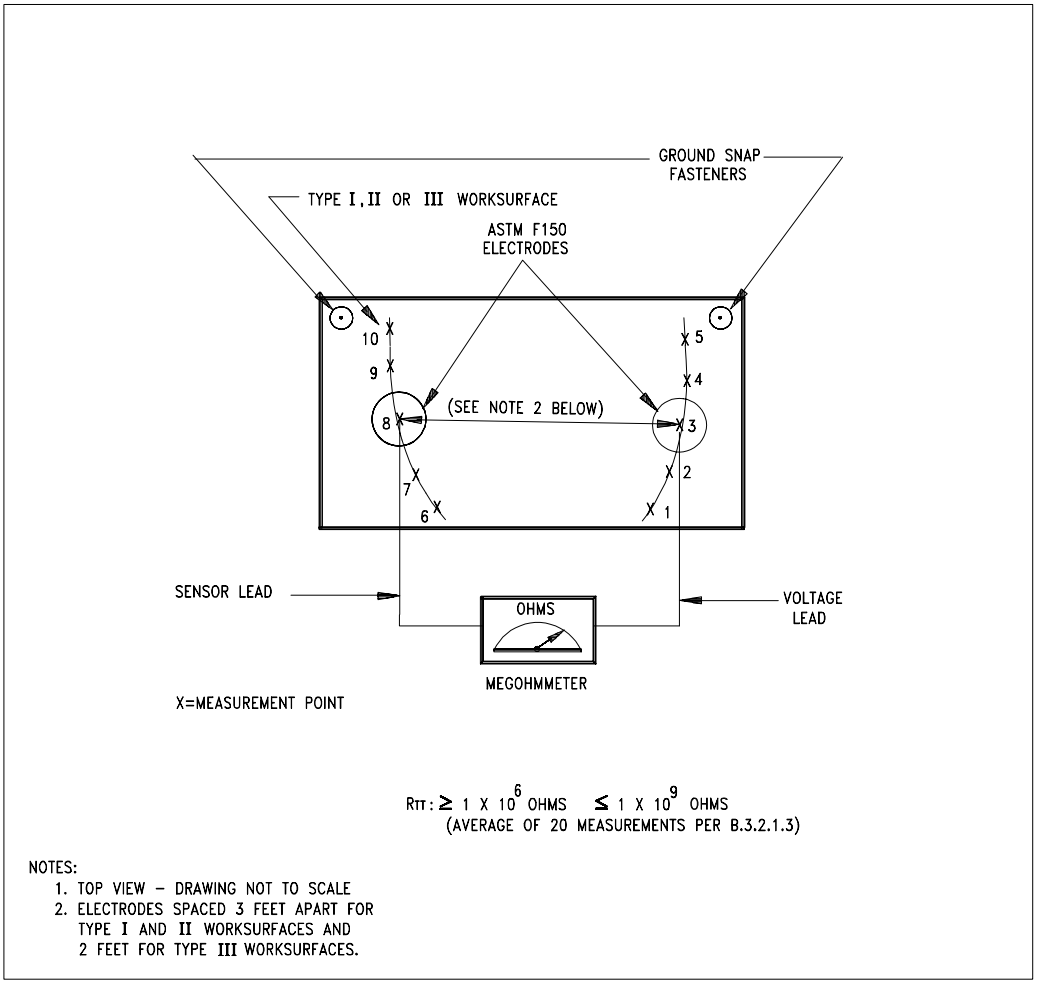


FIGURE 6. $R_{TT}$ (Resistance top to top) measurement.

B.3.2.1.4 Resistance of the ground snap fastener - $R_{GS}$. One resistance measurement using an open circuit test voltage of 100 volts shall be made on each of the two ground snap fasteners for each type worksurface tested. The measurement shall be made by contacting the female snap with the positive source lead of the megohmmeter and the snap covering on the back of the worksurface (see 3.4.3.1.1) with the negative sensing lead. Each measurement shall fall within the specified resistance range and shall be used as pass/fail criteria for $R_{GS}$. Note that when

making these measurements, the worksurface is placed on a non-conductive electrically neutral sheet or worksurface (see B.3.2.1.1.1).

B.3.2.1.5 Resistance between ground snap fasteners - $R_{SS}$. One measurement shall be made for each type worksurface tested as shown on figure 2. Note the leads from the multimeter are clipped or attached to the two ground snap fasteners as shown. The resistance measurement made shall fall within the specified resistance range and will be $\leq 1/10\ R_{TG}$ , and will be used as pass/fail criteria for $R_{SS}$.

B.3.2.1.6 Worksurface hardness tests. Type I and Type II worksurfaces shall be subjected to hardness testing using Shore durometers, Type D and Type A respectively, constructed and calibrated in accordance with ASTM D 2240. A test mass of 2.2046 pounds (lbs.) (1 kilogram) shall be utilized when using the Type A durometer and a test mass of 11.0230 lbs. (5 kilograms) shall be utilized when using the Type D durometer. Hardness measurements shall be taken at five different locations for each worksurface tested. Those locations are upper right corner, upper left corner, lower right corner, lower left corner, and in the center. All corner measurements shall be made within a six inch radius of the corner itself. All measurements shall be made on the top working surface of each worksurface. The average value of the five measurements shall constitute pass/fail criteria. The hardness requirements for each type of worksurface shall be in accordance with 3.4.1.1 and 3.4.1.2.

B.3.2.1.7 ESD Control worksurface test apparatus. The items used for testing each worksurface are identified in Table B-II.

TABLE B-II. Test apparatus.

| |
|---|
| Desiccating or environmental chamber capable of maintaining 10% and 50% RH ± 2% at 70° ± 2° F |
| Non-oxidizing metal sheet (minimum 4 feet by 2 feet) |
| Non-conductive insulative sheet or worksurface (minimum 4 feet by 2 feet) |
| 2-5 lb. electrodes (dimensions and preparation per ASTM F 150) |
| Megohmmeter with 100 and 10 volt open circuit voltage and range of $1 \times 10^5$ to $1 \times 10^{12}$ ohms |
| Power supply capable of providing 10 volts (open circuit) |
| Multimeter having a maximum source current of 1.0 mA at $10^3$ ohms (lower Rss limit) and a minimum source current of 100 nA at $10^7$ ohms (upper Rss limit) |
| Shore durometers, Types A and D |

B.3.2.2. Wrist strap tests.

B.3.2.2.1 Wrist strap resistance test. The test apparatus (see figure 7) consists of a fixed insulative bar where the wrist strap cuff snap plate is seated and a non-oxidizing, metal bar positioned below the insulative bar onto which the fabric portion of the cuff is positioned. Resistance measurements shall be made by connecting a megohmmeter (capable of reading 10 megohms) between the wrist strap cuff snap and any point on the test apparatus electrically equivalent to the non-oxidizing metal support bar. A wrist strap cord (see 3.4.3.4) shall be used as the test lead extending from the wrist strap cuff to the megohmmeter. An open circuit test voltage of between five and 10 volts DC shall be used to measure the resistance. A resistance of between one and 10 megohms shall be measured through the cord/cuff combination.

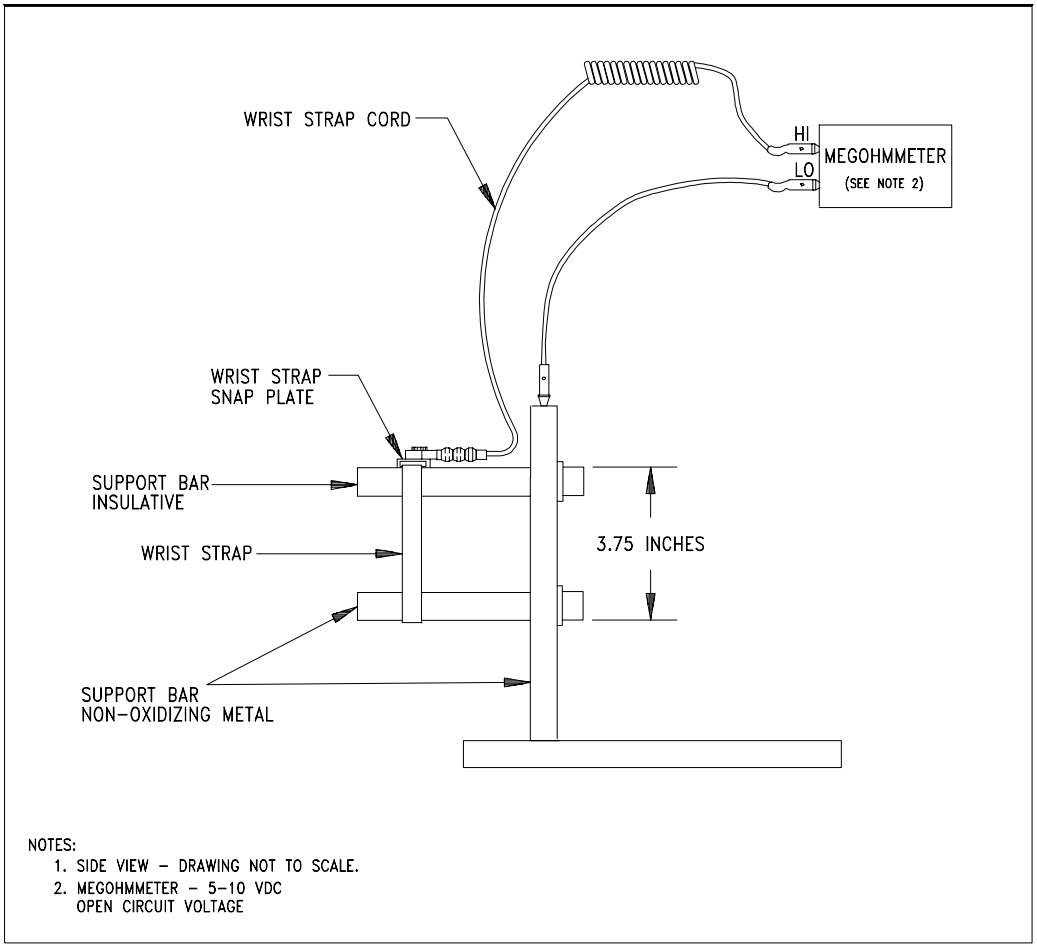


FIGURE 7. Wrist strap resistance test.

B.3.2.2.2 Wrist strap cord bending test. The wrist strap cord bending test is required to stress both cord terminations (banana plug and female snap fastener) to ensure durability. The test apparatus consists of a metal plate on which a stressing mechanism and a rotating disk are

mounted. The rotating disk turns at 30 revolutions per minute (rpm) and drives the stressing mechanism in such a way to rotate a termination mounting fixture through a 120° arc. Figure 8 gives a pictorial view of the test apparatus and the banana plug termination test configuration.

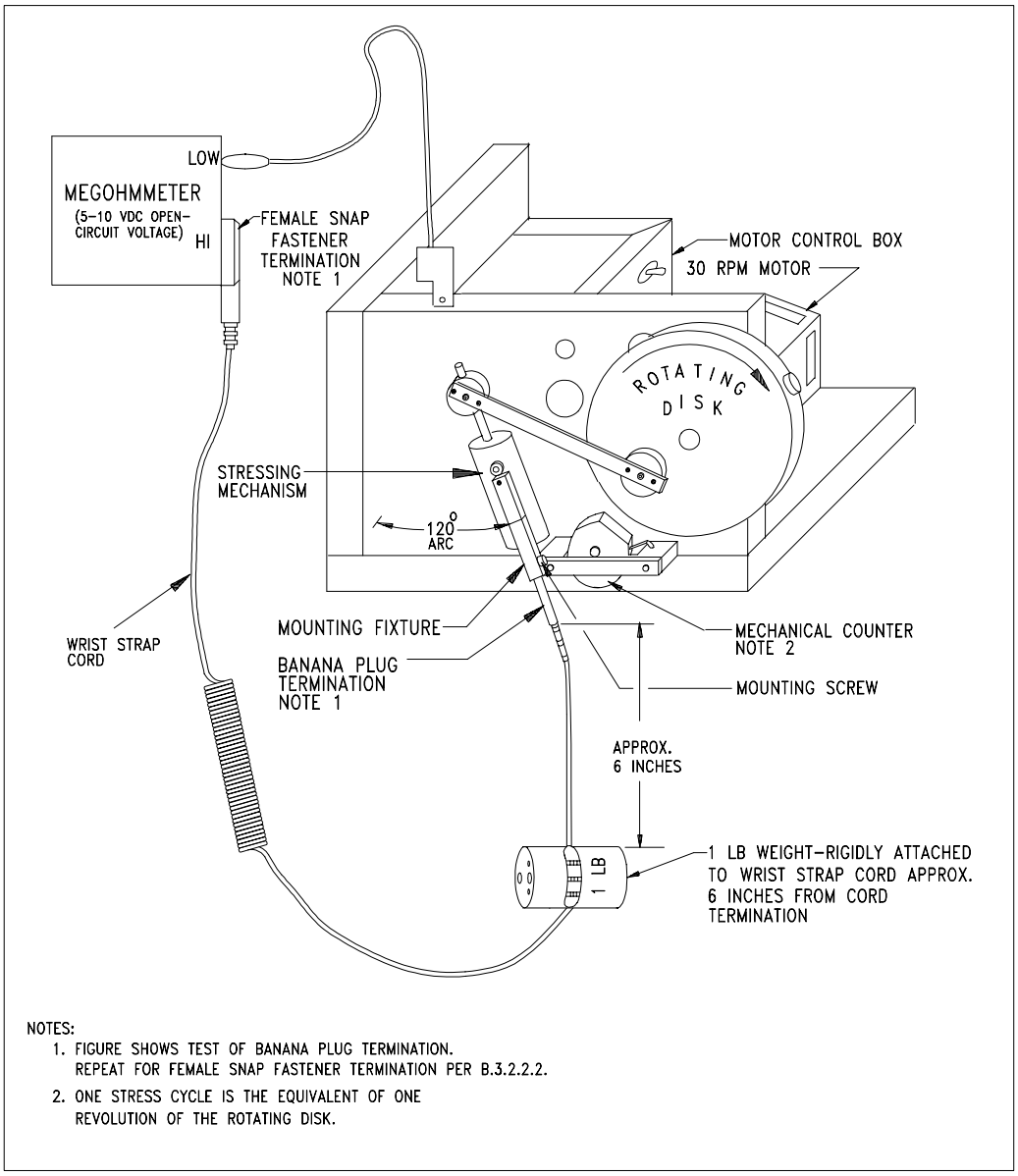


FIGURE 8. Wrist strap cord bending test apparatus.

The banana plug termination shall be tested first by inserting it in the mounting fixture and tightening the mounting screw such that the termination is oriented parallel to the stressing mechanism. A one pound weight shall then be connected to the wrist strap ground wire approximately six inches from the mounting fixture. This weight shall swing freely back and forth as the mounting fixture oscillates, thus

putting stress on the banana plug termination. The banana plug termination shall withstand 15,000 cycles of stress. One cycle is defined as one revolution of the rotating disk. Resistance measurements shall be made while the test is in progress by connecting a megohmmeter between the wrist strap cord termination not being tested and a point on the test apparatus electrically equivalent to the mounting fixture. The resistance shall be continuously monitored and shall be 1.0 ± 5% megohms. An open circuit test voltage of between five and 10 volts DC shall be applied to make the resistance measurement throughout the 15,000 cycle stress period. The test procedure shall be repeated to stress the female snap fastener termination. A different mounting fixture is required for the female snap termination. Any type is acceptable as long as the termination is held rigidly in place and does not slip during the test. As required with the banana plug termination, the female snap termination shall be fixed in a parallel orientation with reference to the stressing mechanism. This termination shall also withstand 15,000 cycles of stress while maintaining the specified resistance.

B.3.2.2.3 Wrist strap cord length test. The wrist strap cord length shall be determined by attaching a .33 lb. weight to one end of the cord and suspending it while rigidly holding the opposite end. For five-foot cords, this suspended length shall be a minimum of five feet. For 10-foot cords, the suspended length shall be a minimum of 10 feet.

B.3.2.2.4 Breakaway force. The breakaway force test is an indicator of the ability of the wrist strap cord to break away from the wrist strap cuff when subjected to an external force. The test is done by connecting the wrist strap cord to the wrist strap cuff worn by a person in the normal manner. Ensure the cuff is snugly fit to the person's wrist. At least one pound but not more than five pounds of pull force applied to the wrist strap cord in the normal disconnect direction shall be required to cause separation from the cuff.

# WORKSURFACE CHARGE DISSIPATION TEST

## C.1 SCOPE

C.1.1 Scope. This appendix contains the test method used to determine the charge dissipation characteristics of ESD Control worksurfaces. This appendix is a mandatory part of the specification. The information contained herein is intended for compliance.

## C.2 APPLICABLE DOCUMENTS

C.2.1 Government documents.

C.2.1.1 Specifications, standards and handbooks. The following specification forms a part of this appendix to the extent specified herein. Unless otherwise specified, the issue of this document is that listed in the Department of Defense Index of Specifications and Standards (DoDISS) and supplement thereto, cited in the solicitation (see 6.2).

SPECIFICATION

MILITARY

MIL-T-43435 - Tape, Lacing & Tying

## C.3 REQUIRED EQUIPMENT

C.3.1 Test apparatus. The test apparatus and configuration used in this test method is shown on figure 9. It includes a disk assembly, test sample support table including a height adjustment mechanism, disk raising/lowering mechanism (RLM), control panel and contact timer, test cabling, disk suspension cord, test apparatus housing and a charge plate monitor.

C.3.1.1 Disk assembly. The disk assembly used in this test method is shown on figure 10. It consists of a 6 ± 0.1 inch circular, conductive disk (i.e. non-anodized aluminum) and a conductive support structure used to suspend it from the RLM. The disk assembly shall have a maximum capacitance of 15 picofarads (pF) as measured in accordance with C.6.1. It shall have a weight of 0.5 ± 0.01 lbs. Dimensional tolerances of the disk assembly are shown on figure 10.

C.3.1.2 Test sample support table including a height adjustment mechanism. The test sample support table including a height adjustment mechanism is used to support the tested worksurface material and to provide parallelism between the tested worksurface material and the raised/lowered disk assembly. The support table should be capable of adjusting test sample height such that a uniform distance is maintained between the disk assembly and the worksurface prior to charge dissipation testing. It must be made of a non-

conductive electrically neutral material in accordance with B.3.2.1.1.1 and have sufficient thickness to rigidly support the test sample, and shall be two feet by two foot ± 0.5 inch.

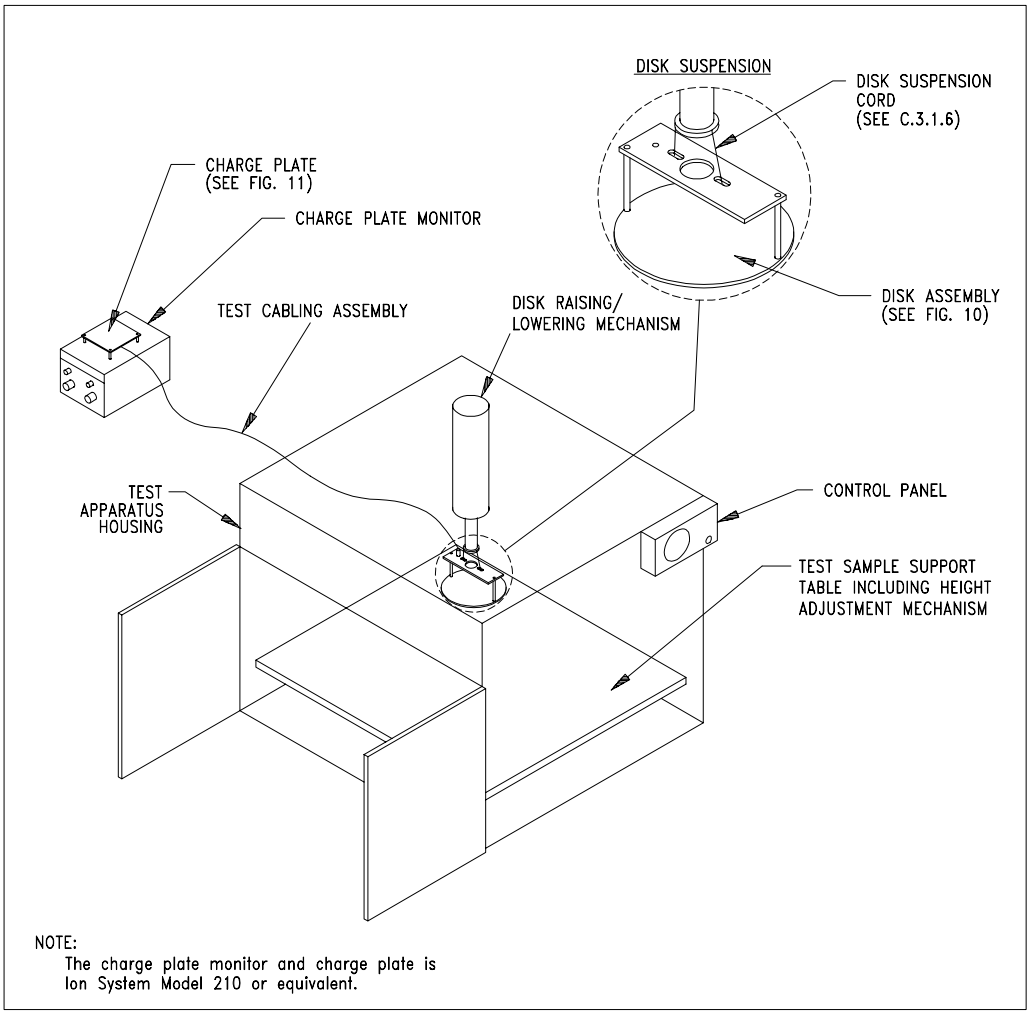


FIGURE 9. Charge dissipation test apparatus.

C.3.1.3 Disk raising/lowering mechanism. The test apparatus housing shall contain a mechanism used to lower and raise the disk assembly to and from the tested worksurface. Any process may be used to accomplish this task (i.e. hydraulic, pneumatic, etc.) as long as the raising/lowering speed is controllable and provides uniform stroke movement and stability to the suspended disk assembly. The RLM must also be capable of suspending the disk assembly above the tested work surface while being electrically isolated from it. The RLM must be controlled such that a specified contact time between the disk assembly and the tested worksurface is maintained.

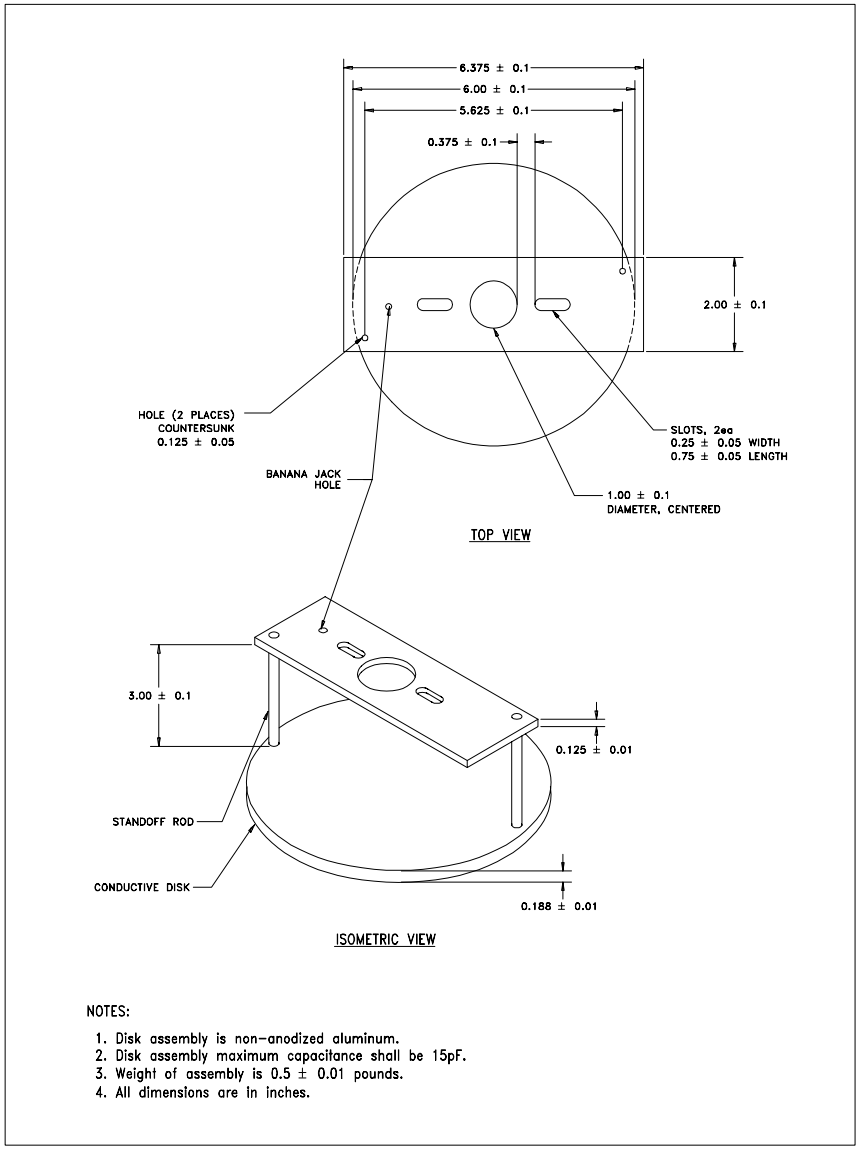


FIGURE 10. Disk assembly.

C.3.1.4 Control panel and contact timer. A control panel and contact timer shall be used to activate the RLM and control the time in which the disk assembly is in contact with the test sample. Contact time shall be as specified in C.7.1.5.

C.3.1.5 Test cabling. The specified test voltage is applied to the disk assembly from a charge plate monitor through test cabling. The test cabling provides the electrical connection between the disk assembly and the charge plate monitor when monitoring the resultant disk assembly voltage after it is raised from the test sample. The entire cable length shall be no greater than four feet and consist of two mechanically and electrically connected sections. The first section shall consist of three feet of insulated high voltage

wire (40KV minimum). It shall be mechanically and electrically connected to a smaller one-foot section of insulated (28 gauge or greater) wire. The high voltage wire end of the cable assembly is connected to the charge plate assembly and the smaller wire end is connected to the disk assembly. The cable shall not contact any portion of the test apparatus housing between the disk assembly and the charge plate monitor. This can be accomplished through an electrically insulative standoff material clamped to the test apparatus housing. The use of this isolation technique as well as the specified wire types ensures electrical isolation of the disk assembly. Test cable acceptability is verified through the Disk Isolation/System Verification Test outlined in C.6.2.

C.3.1.6 Disk suspension cord. The disk assembly shall be suspended and electrically isolated from the RLM. Braided nylon lacing tape in accordance with MIL-T-43435, Type I, Size 5, finish B or equivalent is recommended.

C.3.1.7 Test apparatus housing. It is recommended that the suspended disk assembly, test sample support table and height adjustment mechanism be contained within a grounded conductive housing. The test apparatus housing provides some limited shielding from external noise or electromagnetic interference (EMI) sources and a ground point for the worksurface test samples. Its size is dependent on overall system design but should accommodate, as a minimum, the following test apparatus components: the disk assembly, test sample support table, and the test sample. There shall be a 0.05 inch clearance between the test apparatus housing and the test sample support table.

C.3.1.8 Charge plate assembly and monitor.

C.3.1.8.1 Conductive plate dimensions and capacitance. The conductive plate shall be 6 by 6 ± 0.1 inches. The conductive plate shall have a thickness of .25 ± 0.01 inch. The total capacitance of the test circuit, with plate, shall be 20 ± 2 picofarads.

C.3.1.8.2 Location of objects. There shall be no objects, grounded or otherwise, closer than 0.875 ± 0.05 inches to the conductive plate as shown on figure 11, except the insulative standoffs or plate voltage contacts.

C.3.1.8.3 Isolation of conductive plate. The isolated conductive plate, when charged to the desired test voltage, shall not discharge more than 10% of the test voltage within five minutes.

C.3.1.8.4 Monitoring of voltage. The voltage on the plate shall be monitored while ensuring the system conforms to C.3.1.8.1, C.3.1.8.2 and C.3.1.8.3. The response time of the monitoring device shall be sufficient to accurately measure charging plate voltage.

C.3.2 Coulomb meter and voltage source. A voltage source with a recommended output voltage V, that is within ±20% of 100 volts should be used. A coulomb meter with a resolution of ±0.02 nanocoulombs on an appropriate scale (at least 3 nanocoulombs full scale) is also recommended.

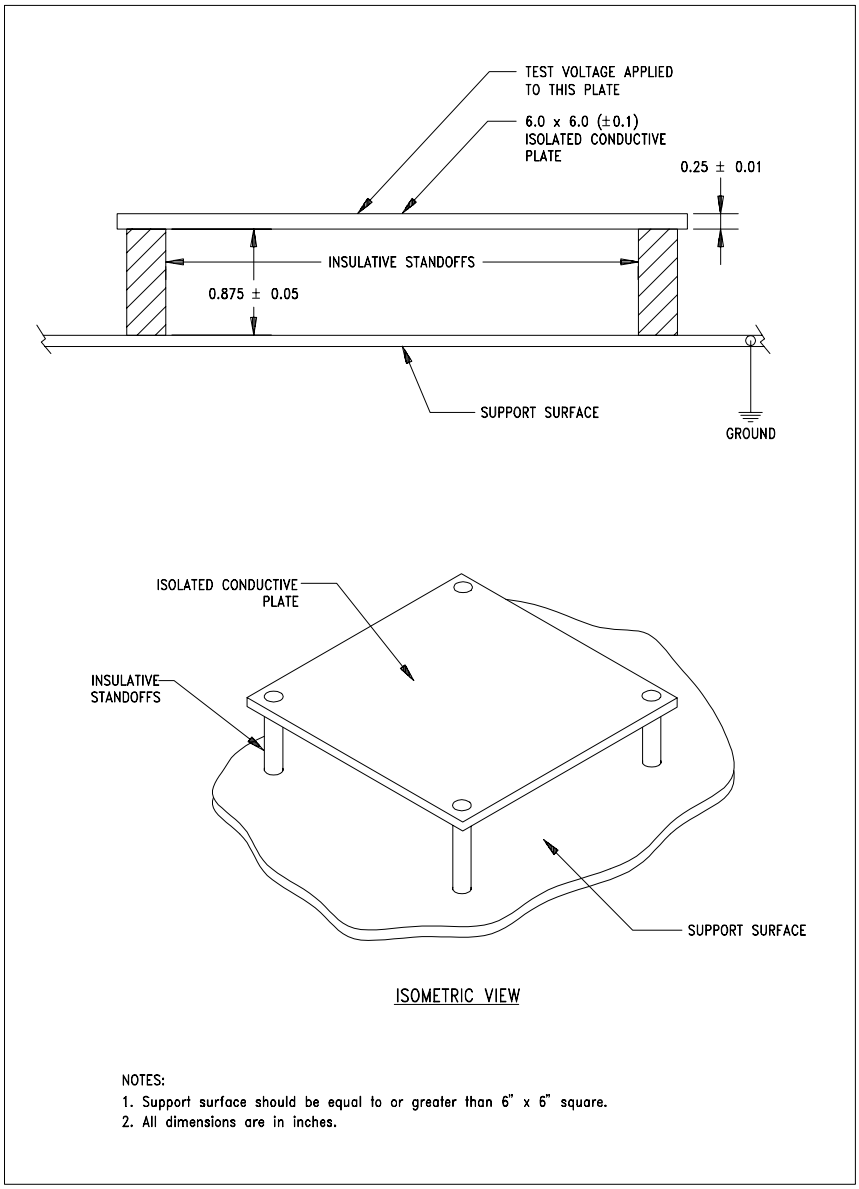


FIGURE 11. Typical charge plate assembly.

C.3.3 Megohmmeter. An megohmmeter is required to ensure electrical continuity between the charge plate and disk assembly as specified in C.6.2.

C.3.4 Environmental chamber. An environmental chamber that can accommodate the test apparatus and test samples is required. It shall be capable of maintaining relative humidity to 10 ±2% RH and 50 ±2% RH at a temperature of 70° ±2°F.

C.4 Test samples. Worksurface test samples shall be two feet by two feet ± 0.05 inches and have a ground snap fastener installed in accordance with 3.4.3.1 . A minimum of three (3) test samples of each worksurface material tested shall be used.

C.5 Sample preparation/pre-conditioning and testing. All test samples shall be cleaned at the test location with a minimum 70% isopropanol-water solution using a clean, lint-free cloth. Cleaning shall be done just prior to the conditioning period. Sample pre-conditioning and testing shall be done in two environments. The first is to precondition the samples in the specified chamber for 48 hours at 10 ±2% RH and 70° ±2° F prior to testing the samples in the same environment. The second is to precondition the samples in the specified chamber at 50 ±2% RH and 70° ±2° F for 48 hours prior to testing in the same environment.

C.6 System verification procedures. All system verification procedures shall be performed in each of the conditioned environments specified in C.5.

C.6.1 Measurement of disk assembly capacitance. Charge the plate to voltage (V) as shown in the example (table C-I) by contacting it with the voltage source probe. Then remove the charge on the plate by touching it with the probe from the coulomb meter. Record the charge reading. The experiment should be repeated 10 times so that the average value and standard deviation can be determined. Table C-I contains an example of the type of data that can be expected by using this procedure on a 6 inch x 6 inch conductive plate. If the test is performed in a repeatable manner, the standard deviation shall be less than 0.5 pF.

TABLE C-I. Example of test results.

| Voltage (V) volts | Charge (Q) nC | Capacitance pF |
|---|---|---|
| | | |
| 100 | 1.75 | 17.5 |
| 100 | 1.71 | 17.1 |
| 100 | 1.73 | 17.3 |
| 100 | 1.74 | 17.4 |
| 100 | 1.73 | 17.3 |
| 100 | 1.76 | 17.6 |
| 100 | 1.75 | 17.5 |
| 100 | 1.70 | 17.0 |
| 100 | 1.75 | 17.5 |
| 100 | 1.73 | 17.3 |

The average capacitance and standard deviation calculated from table C-I:

Capacitance = 17.35 pF
Standard deviation = 0.180 pF

The technique used in this example is to measure the capacitance of an isolated conductive plate with the dimensions of 6 x 6 x 0.25 inches located 0.875 inch above a minimum 6 inch x
6 inch ground plane. All measurements are referenced to the electrical ground at the ground plane. Ten measurements were taken for the value of a charge Q (shown above) on the plate when it is charged to V (100 volts). The calculated values for the plate capacitance shown above used the equation of C=Q/V.

C.6.2 Disk isolation and system verification. The following procedures shall be used to verify adequate isolation of the disk assembly and the charge plate prior to charge dissipation testing.

C.6.2.1 Connection of test cabling. Connect the test cabling to the disk assembly and charge plate monitor as outlined in C.3.1.5. Verify electrical continuity between the disk assembly and the charge plate using an megohmmeter connected between the two items. The measured resistance shall be 1 ohm or less.

C.6.2.2 Removal of residual charge. Remove the residual charge from the disk assembly and the charge plate monitor through momentary contact with the ground.

C.6.2.3 Application of voltage. Apply +1,000 volts to the disk assembly and charge plate using the charge plate monitor. Verify that the initial voltage does not decay by more than 10% of the initial value after five minutes. Repeat the process for an initial disk/plate voltage of -1,000 volts. Record the resultant voltages for each polarity after the five minute waiting period. Note that if the disk/plate voltage decays by more than 10% of the initial value, charge dissipation testing cannot be continued. Reasons for this problem could be related to the charge plate functionality, insufficient cable insulation or isolation of the cable from the conductive elements of the test apparatus.

C.7 Test sample test procedures. All test sample test procedures shall be performed in each of the conditioned environments specified in C.5.

C.7.1 Pretest preparations.

C.7.1.1 Connection of test cabling. Connect the test cabling to the disk assembly and charge plate monitor as outlined in C.3.1.5.

C.7.1.2 Grounding of test sample. Place the conditioned test sample on the support table and ground it through its ground snap fastener to the test apparatus housing.

C.7.1.3 Adjustment of disk suspension cord and test sample support table. Adjust the disk suspension cord and test sample support table as necessary to ensure that the entire weight of the disk assembly rests on the test sample when the RLM is in the "lowered" position.

C.7.1.4 Test sample/disk assembly clearance adjustment. Raise the disk assembly from the test sample using the RLM to the "raised" position. Adjust only the disk suspension cable at this point to ensure a minimum clearance between the test sample and the disk assembly of three inches and that the disk assembly and test sample are approximately parallel.

C.7.1.5 Setting contact timer. Set the contact timer to a cycle time necessary to ensure a contact time between the disk assembly and the test sample of 5.0 ± 0.1 seconds. This may require several cycles of the RLM and adjustments of the timer to achieve the specified contact time.

C.7.2 Charge dissipation test. Note, that the resultant voltage obtained through charge dissipation testing may be affected by tribocharging. This tribocharging affect is at least in part due to the physical properties of the tested worksurface. The pass/fail criteria specified later in this appendix considers both the worksurface's ability or inability to drain charge from the disk assembly and its tribocharging contribution during the lifting process.

C.7.2.1 Removal of residual charge. Ensure that the disk assembly is in the "raised" position. Ground (zero) the charge plate and disk assembly to remove any residual charge.

C.7.2.2 Application of voltage. Apply +1,000 ±10% volts to the disk assembly using the charge plate monitor.

C.7.2.3 Activation of RLM. Activate the RLM through one cycle (lower/contact/raise). Record the resultant voltage and polarity on the disk assembly from the charge plate monitor. This measurement shall be recorded within 10 seconds of cycle completion.

C.7.2.4 Repetition of steps. Repeat steps C.7.2.1 through C.7.2.3 two more times.

C.7.2.5 Repetition of steps for negative voltage. Repeat steps C.7.2.1 through C.7.2.4 for an initial disk assembly voltage of -1,000 ±10% volts.

C.7.3 Pass/fail criteria. The average resultant voltage from the three readings taken with an initial voltage of +1000 volts shall be less than +200 volts. Likewise, the average resultant voltage from the three readings taken with an initial voltage of -1000 volts shall be less than -200 volts (i.e. -199, -198, etc.). These pass/fail values shall apply for both environmental test conditions specified in C.5.

# STANDARDIZATION DOCUMENT IMPROVEMENT PROPOSAL

INSTRUCTIONS

1. The preparing activity must complete blocks 1, 2, 3, and 8. In block 1, both the document number and revision letter should be given.
2. The submitter of this form must complete blocks 4, 5, 6, and 7.
3. The preparing activity must provide a reply within 45 days from receipt of the form.

NOTE: This form may not be used to request copies of documents, not to request waivers, or clarification of requirements on current contracts. Comments submitted on this form do not constitute or imply authorization to waive any portion of the referenced document(s) or to amend contractural requirements.

| I RECOMMEND A CHANGE: | 1. DOCUMENT NUMBER MIL-PRF-87893B | 2. DOCUMENT DATE (YYMMDD) 970115 |
|---|---|---|

3. DOCUMENT TITLE
WORKSTATION, ELECTROSTATIC DISCHARGE (ESD) CONTROL

4. NATURE OF CHANGE (Identify paragraph number and include proposed rewrite, if possible. Attach extra sheets as needed.)

5. REASON FOR RECOMMENDATION

6. SUBMITTER

| a. NAME (Last, First, Middle Initial) | b. ORGANIZATION | |
|---|---|---|
| c. ADDRESS (Include Zip Code) | d. TELEPHONE (Include Area Code)<br>(1) Commercial<br>(2) AUTOVON<br>*(If applicable)* | 7. DATE SUBMITTED<br>*(YYMMDD)* |

8. PREPARING ACTIVITY

| A. NAME<br>ASC/ENSI Bldg 560 | B. TELEPHONE (Include Area Code)<br>(1) Commercial (937) 255-8665<br>(2) AUTOVON (If applicable) 785-8665 |
|---|---|
| C. ADDRESS (Include Zip Code)<br>2530 Loop Rd W<br>Wright-Patterson AFB OH 45433-7101 | IF YOU DO NOT RECEIVE A REPLY WITHIN 45 DAYS, CONTACT:<br>Defense Quality and Standardization Office<br>5203 Leesburg Pike, Suite 1403, Falls Church VA 22041-3466<br>Telephone (703) 756-2340 AUTOVON 289-2340 |