Downloaded from http://www.everyspec.com

INCH-POUND

MIL-PRF-83860C(USAF)
31 January 1998
SUPERSEDING
MIL-F-83860B(USAF)
30 June 1986

PERFORMANCE SPECIFICATION

FILTER ELEMENTS, DISPOSABLE, FLUID PRESSURE, HYDRAULIC LINE, 5 MICRON ABSOLUTE

This specification is approved for use by the Department of the Air Force and is available for use by all Departments and Agencies of the Department of Defense.

1. SCOPE

1.1 Scope. This specification covers disposable hydraulic line filter elements that retain all particles larger than 5 microns. For use, the element is inserted in a canister prior to use in a hydraulic system, and is intended for use with hydraulic fluids conforming to MIL-H-5606, MIL-H-83282, and MIL-H-87257.

2. APPLICABLE DOCUMENTS

2.1 General. The documents listed in this section are cited in sections 3 and 4 of this specification. These lists do not include documents cited in other sections of this specification or recommended for additional information or as examples. While every effort has been made to ensure the completeness of these lists, document users are cautioned that they must meet the requirements specified in the documents cited in sections 3 and 4 of this specification, whether or not they are listed.

Beneficial comments (recommendations, additions, deletions) and any pertinent data that may be of use in improving this document should be addressed to: Oklahoma City Air Logistics Center/TICLA, 3001 Staff Drive, Suite 1AE1-101A, Tinker AFB, OK 73145-3036, by using the Standardization Document Improvement Proposal (DD Form 1426) appearing at the end of this document or by letter.

AMSC N/A FSC 1650

Downloaded from http://www.everyspec.com

2.2 Government documents.

2.2.1 Specifications. The following specifications form a part of this document to the extent specified herein. Unless otherwise specified, the issues of these documents are those listed in the issue of the Department of Defense Index of Specifications and Standards (DoDISS) and supplement thereto, cited in the solicitation (see 6.2).

SPECIFICATIONS

DEPARTMENT OF DEFENSE

MIL-H-5606	-	Hydraulic Fluid, Petroleum Base; Aircraft, Missile and Ordnance
MIL-H-83282	-	Hydraulic Fluid, Fire Resistant, Synthetic Hydrocarbon Base, Aircraft, Metric, Nato Code Number H-537
MIL-H-87257	-	Hydraulic Fluid, Fire Resistant; Low Temperature, Synthetic Hydrocarbon Base, Aircraft and Missile

(Unless otherwise indicated, copies of the above specifications are available from the Defense Automated Printing Service, 700 Robbins Avenue, Building 4D, Philadelphia, PA 19111-5094.)

2.3 Non-Government publications. The following documents form a part of this document to the extent specified herein. Unless otherwise specified, the issues of the documents which are DoD adopted are those listed in the issue of the DoDISS cited in the solicitation. Unless otherwise specified, the issues of documents not listed in the DoDISS are the issues of the documents cited in the solicitation (see 6.2).

SOCIETY OF AUTOMOTIVE ENGINEERS (SAE)

SAE ARP 598	-	The Determination of Particulate Contamination in Liquids by the Particle Count Method (DoD-adopted)
SAE ARP 785	-	Aerospace - Procedure for the Determination of Particulate Contamination in Hydraulic Fluids by the Control Filter Gravimetric Procedure (DoD-adopted)
SAE ARP 901	-	Bubble-Point Test Method

(Application for copies should be addressed to Society of Automotive Engineers, 400 Commonwealth Drive, Warrendale, PA 15096-0001.)

Downloaded from http://www.everyspec.com

AEROSPACE INDUSTRIES ASSOCIATION OF AMERICA, INC. (AIA/NAS)

AIA/NAS 1638	-	Cleanliness Requirements of Parts Used in Hydraulic Systems (DoD-adopted)

(Application for copies should be addressed to the Aerospace Industries Association of America, Inc., 1250 Eye Street NW, Suite 1100, Washington, D.C. 20005.)

INTERNATIONAL ORGANIZATION FOR STANDARDIZATION (ISO)

ISO 4572	-	Hydraulic Fluid Power - Filters - Multi-Pass Method for Evaluating Filtration Performance

(Application for copies should be addressed to the International Organization for Standardization, Case postale 56, CH-1211 Geneve 20, Switzerland).

AMERICAN NATIONAL STANDARDS INSTITUTE/AMERICAN SOCIETY FOR QUALITY (ANSI/ASQ)

ANSI/ASQ Z1.4	-	Sampling Procedures and Tables for Inspection by Attributes (DoD-adopted)

(Application for copies should be addressed to American Society for Quality, P.O. Box 3066, Milwaukee, WI 53201-3066, or to the American National Standards Institute, 11 West 42nd Street, 13th Floor, New York, NY 10036.)

RADIO TECHNICAL COMMISSION FOR AERONAUTICS (RTCA)

RTCA/DO-160	-	Environmental Conditions and Test Procedures for Airborne Equipment

(Application for copies should be addressed to Radio Technical Commission for Aeronautics, RTCA Secretariat, 1425 K Street, NW, Suite 500, Washington, D.C. 20005)

2.4 Order of precedence. In the event of a conflict between the text of this document and the references cited herein, (except for related associated specifications or specification sheets) the text of this document takes precedence. Nothing in this document, however, supersedes applicable laws and regulations unless a specific exemption has been obtained.

3. REQUIREMENTS

3.1 Qualification. The filter element furnished under this specification shall be products that are authorized by the qualifying activity for listing on the applicable qualified products list (QPL) before contract award (see 4.2 and 6.3).

Downloaded from http://www.everyspec.com

3.2 Recycled, recovered, or environmentally preferable materials. Recycled, recovered, or environmentally preferable materials should be used to the maximum extent possible provided that the material meets or exceeds the operational and maintenance requirements, and promotes economically advantageous life cycle cost.

3.3 Workmanship. The filter element shall be constructed in accordance with commonly accepted industrial workmanship standards.

3.4 Materials.

3.4.1 Fungus resistance. The filter elements shall be resistant to fungus.

3.4.2 Aging. If filter materials having age limitations are used, an expiration date shall be added to the marking requirement of 3.8.

3.4.3 Hazardous materials. The use of toxic chemicals, hazardous substances, or ozone depleting chemicals shall be avoided, whenever feasible.

3.5 Interface.

3.5.1 Dimensions. The filter element shall conform to the dimensions for the appropriate part number (PN) as designated by figures 1, 2, 3, or 4 (see 6.2).

3.5.2 Type. The filter element shall be of the full-flow type. The flow through the filter element shall be from the outside of the filter to the inside.

3.6 Performance.

3.6.1 Endurance. The filter element shall be capable of withstanding 2,000 hours of operation in ambient temperature with a 275°F test fluid.

3.6.2 General. Filter element performance requirements are specified in table I.

3.6.3 Filter media. Filter media shall withstand thermal and pressure-flow cycling. In addition, there shall be no filter media migration during operation.

3.6.4 Bubble point. The initial bubble point of the filter element shall occur at a minimum of 3 inches of water.

3.6.5 Fluid contamination. Filter material shall not contaminate hydraulic fluid.

3.6.6 Cold start. The filter element shall withstand the differential pressure specified in table I for 10 flow cycles at -65° ± 5°F.

Downloaded from http://www.everyspec.com

TABLE I. Performance requirements

	M83860/1 -6	M83860/1 -8	M83860/1 -10	M83860/1 -12	M83860/1 -16
Operating fluid temperature range (°F)	-65 to 275	-65 to 275	-65 to 275	-65 to 275	-65 to 275
Operating pressure (psi)	3,000	3,000	3,000	3,000	3,000
Absolute rating (micron)	5	5	5	5	5
Rated flow (gal/min)	3.5	6.0	10.5	16.0	29.0
Cold Start Differential pressure (psi)	3,000	3,000	3,000	3,000	3,000
Efficiency Add quantity: F-9 beads (g)	0.15	0.15	0.15	0.15	0.15
AC dust (g)	0.15	0.15	0.15	0.15	0.15
Contaminant removal: particles > absolute rating (percent)	100	100	100	100	100
Contaminant removal by weight (percent)	95	95	95	95	95
Abrasion Migration (g)	0.0040	0.0040	0.0040	0.0040	0.0040
Pressure Buildup and Collapse Pressure drop (clean element) (psi)	10	10	10	10	10
AC dust add increments (g)	0.10	0.10	0.18	0.26	0.49
AC dust minimum weight (g)	1.4	1.8	3.4	5.2	7.4
Element pressure drop (psi)	90	90	90	90	90
Min collapse pressure (psi)	4,500	4,500	4,500	4,500	4,500
Flow Fatigue Hydraulic fluid temperature (°F)	275 ± 5	275 ± 5	275 ± 5	275 ± 5	275 ± 5
Flow rate (gal/min)	1.5	2.0	3.5	5.0	9.0
Cycling rate (cpm)	300	300	300	300	300
(a) Number of fatigue cycles Element pressure drop (psi)	1,120,000 20	1,120,000 20	1,120,000 20	1,120,000 20	1,120,000 20
(b) Number of fatigue cycles Element pressure drop (psi)	112,000 50	112,000 50	112,000 50	112,000 50	112,000 50
(c) Number of fatigue cycles Element pressure drop (psi)	12,500 100	12,500 100	12,500 100	12,500 100	12,500 100
(d) Number of fatigue cycles Element press drop (psi)	400 1,500	400 1,500	400 1,500	400 1,500	400 1,500
(e) Number of fatigue cycles Element pressure drop (psi)	100 3,000	100 3,000	100 3,000	100 3,000	100 3,000
Max Particle Passed (micron)	5	5	5	5	5
Add rate carbonyl iron E (g)	0.3	0.3	0.3	0.3	0.3
Note: AC dust is standardized fine air cleaner dust.					

Downloaded from http://www.everyspec.com

TABLE I. Performance requirements (cont'd)

	M83860/2	M83860/3	M83860/4 -1	M83860/4 -2	M83860/4 -3
Operating fluid temperature range (°F)	-65 to 275	-65 to 275	-65 to 275	-65 to 275	-65 to 275
Operating pressure (psi)	100	3,000	3,000	100	100
Absolute rating (micron)	5	5	5	5	5
Rated flow (gal/min)	40	36	24	3	12
Cold Start Differential pressure (psi)	150	3,000	3,000	150	150
Efficiency Add quantity: F-9 beads (g)	0.15	0.15	0.15	0.15	0.15
AC dust (g)	0.15	0.15	0.15	0.15	0.15
Contaminant removal: particles > absolute rating (percent)	100	100	100	100	100
Contaminant removal by weight (percent)	95	95	95	95	95
Abrasion Migration (g)	0.0040	0.0040	0.0040	0.0040	0.0040
Pressure Buildup and Collapse Pressure drop (clean element) (psi)	7	11	18	8	8
AC dust add increments (g)	1.0	0.7	0.25	0.25	0.50
AC dust minimum weight (g)	9.0	10.5	4.0	2.5	5.1
Element pressure drop (psi)	20	90	90	40	40
Min collapse pressure (psi)	150	4,500	4,500	150	150
Flow Fatigue Hydraulic fluid temperature (°F)	275 ± 5	275 ± 5	275 ± 5	275 ± 5	275 ± 5
Flow rate (gal/min)	12.0	11.0	7.5	1.0	4.0
Cycling rate (cpm)	300	300	300	300	300
(a) Number of fatigue cycles Element pressure drop (psi)	1,125,000 20	1,120,000 20	1,120,000 20	1,120,000 20	1,120,000 20
(b) Number of fatigue cycles Element pressure drop (psi)	112,000 50	112,000 50	112,000 50	112,000 50	112,000 50
(c) Number of fatigue cycles Element pressure drop (psi)	12,500 100	12,500 100	12,500 100	12,500 100	12,500 100
(d) Number of fatigue cycles Element press drop (psi)	500 150	400 1,500	400 1,500	500 150	500 150
(e) Number of fatigue cycles Element pressure drop (psi)	N/A N/A	100 3,000	100 3,000	N/A N/A	N/A N/A
Max Particle Passed (micron)	5	5	5	5	5
Add rate carbonyl iron E (g)	0.3	0.3	0.3	0.3	0.3
Note: AC dust is standardized fine air cleaner dust.					

3.7 Interchangeability. All parts having the same manufacturer's part number shall be functionally and dimensionally interchangeable.

Downloaded from http://www.everyspec.com

3.8 Item identification. The filter shall be permanently and legibly marked with the following information:

a. Manufacturer's name

b. Manufacturer's CAGE code

c. Manufacturer's PN

d. Manufacturer's lot number

e. M83860/X-XX

f. Expiration date of life-limited material if required by 3.4.2

The markings shall not affect the sealing or performance of the filter element.

4. VERIFICATION

4.1 Classification of inspections. The inspection requirements specified herein are classified as follows (see 6.2):

a. Qualification inspection (see 4.2)

b. Conformance inspection (see 4.3)

4.2 Qualification inspection. If required (see 3.1 and 6.3), qualification shall be performed on five filter elements of each part number. Four of the filter elements shall be subjected to the tests indicated in table II. The remaining filter element shall be subjected to the fungus test in 4.6.9.

4.3 Conformance inspection. Conformance inspection shall consist of the individual tests in 4.3.1 and the sampling tests in 4.3.2.

4.3.1 Individual tests. The filter element shall be subjected to the examination in 4.6.1, except for dimensional analysis, and the test in 4.6.2.2.

4.3.2 Sampling tests. A sample of filter elements shall be selected in accordance with ANSI/ASQ Z1.4 at an S-1 inspection level unless modified in the procurement document (see 6.2), and shall be subjected to the examination in 4.6.1 and the tests in 4.6.2.2, 4.6.4, and 4.6.6. One half of the sample parts shall be subjected to the test in 4.6.6 without in-line particle sampling. The remaining half of the sample parts shall be subjected to the test in 4.6.4. If the sample size is an odd number, the extra filter element shall be subjected to the test in 4.6.6.

4.4 Test conditions and preparation.

Downloaded from http://www.everyspec.com

4.4.1 Test fluid. Unless otherwise specified, the test fluid used for all tests shall conform to MIL-H-5606, MIL-H-83282, or MIL-H-87257 hydraulic fluid.

TABLE II. Qualification tests

Filter element no. 1 (lowest initial bubble point)	Filter element no. 2 (highest initial bubble point)	Filter element no. 3 (2nd lowest initial bubble point)	Filter element no. 4	Test
Examination of product	Examination of product	Examination of product	Examination of product	4.6.1
Initial bubble point	Initial bubble point	Initial bubble point	Initial bubble point	4.6.2.1
Immersion	Immersion	Immersion	Immersion	4.4.3
Conformance bubble point	Conformance bubble point	Conformance bubble point	Conformance bubble point	4.6.2.2
Cold start	Cold start	Cold start	Cold start	4.6.3
Conformance bubble point	Conformance bubble point	Conformance bubble point	Conformance bubble point	4.6.2.2
Max particle passed	N/A	N/A	N/A	4.6.5
Conformance bubble point	N/A	N/A	N/A	4.6.2.2
Flow fatigue	N/A	N/A	N/A	4.6.7
Conformance bubble point	N/A	N/A	N/A	4.6.2.2
N/A	Pressure buildup and collapse	N/A	N/A	4.6.6
N/A	Conformance bubble point	N/A	N/A	4.6.2.2
N/A	N/A	Efficiency	N/A	4.6.4
N/A	N/A	Conformance bubble point	N/A	4.6.2.2
N/A	N/A	N/A	Media and abrasion migration	4.6.8
N/A	N/A	N/A	Conformance bubble point	4.6.2.2

4.4.1.1 Test fluid cleanliness. The test fluid shall be pre-cleaned to a level equal to AIA/NAS 1638, Class 1.

4.4.1.2 Test fluid filtration. Unless otherwise specified, the test fluid shall be continuously filtered through a 3-micron absolute filter that will remove 99.5% by weight of contaminants.
4.4.1.3 Test fluid temperature. Unless otherwise specified, the test fluid temperature shall be 100° ± 10°F.

4.4.2 Temperature. Unless otherwise specified, the tests shall be conducted at room ambient temperature.

Downloaded from http://www.everyspec.com

4.4.3 Immersion. After performing the initial bubble point test and prior to performing the qualification tests (see table II), filter elements shall be immersed in 275°F test fluid for 72 hours and then in -65°F test fluid for another 72 hours. All internal parts shall be in contact with the test fluid during this period. After immersion, the filter elements shall remain in the test fluid at room temperature until further tests are conducted.

4.4.4 Test air. The air used to pressurize a test setup shall be filtered through a membrane filter (0.45 micron absolute) (see 6.4).

4.4.5 Elimination of static electricity. A device to eliminate static electricity shall be in proximity to the filter membrane, or to the pan on which it rests, whenever any object or material is being weighed to a precision of ±0.1 gram or finer.

4.4.6 Flow cycle. A flow cycle consists of increasing the differential pressure across the filter element from 0 to the operating pressure in table I and then decreasing to 0 psi.

4.4.7 Fatigue cycle. A fatigue cycle consists of increasing the differential pressure across the filter element (loaded with AC dust) from 0 to the element pressure drop in the flow fatigue part of table I and decreasing to 0 psi.

4.5 Requirements cross-reference matrix. Table III provides a cross-reference matrix of the section 3 requirements tested or verified in the paragraphs below.

TABLE III. Requirements cross-reference matrix

Requirement	Verification	Requirement	Verification
3.1	4.2	3.6.2	4.6
3.3	4.6.1	3.6.3	4.6.8.3
3.4.1	4.6.9	3.6.4	4.6.2
3.4.2	4.6.1	3.6.5	4.6.4
3.5.1	4.6.1	3.6.6	4.6.3
3.5.2	4.6.1	3.7	4.6.1
3.6.1	4.6.10	3.8	4.6.1

4.6 Tests.

4.6.1 Examination. The filter element shall be examined for compliance with requirements for materials, dimensions, markings, and workmanship.

4.6.2 Bubble point.

4.6.2.1 Initial bubble point. The initial bubble point of each filter element shall be determined in accordance with the procedures in SAE ARP 901. The lowest initial bubble point of the four filter elements is the value to be used in all subsequent tests referring to initial bubble point. Filter elements having an initial bubble point of less than 3 inches of water are not acceptable.

Downloaded from http://www.everyspec.com

4.6.2.2 Conformance bubble point. Each filter element shall be submerged in test fluid (see 4.4.1) and an air pressure set to 0.1 inch of water less than the initial bubble point shall be applied to the filter element. No bubbles shall emerge from the filter element.

4.6.3 Cold start. The filter element shall be installed in a test filter housing filled with test fluid, placed in a test system (see figure 5), and subjected to a temperature of −65° ± 5°F for four hours. At or below this test fluid temperature, 10 flow cycles shall be conducted, at the differential pressure shown in table 1, with each cycle 15 ± 1 seconds in duration. The test filter housing relief valve, where applicable, shall be blocked during this test. There shall be no filter media damage as evidenced by satisfactory completion of subsequent tests in table II. The filter element pressure drop shall not exceed the clean element pressure drop in table I after performing the cold start test.

4.6.3.1 Media migration. During the first and tenth cycles of the test in 4.6.3, using filter element number four, 500 milliliter (mL) of test fluid shall be collected after passing through the filter element. Prior to collecting the test fluid samples, the sampling line, fittings and valve shall be flushed. The fluid shall be analyzed in accordance with the procedures in SAE ARP 785 and the abrasion migration test in 4.6.8. The weight of contaminant collected in each sample shall be multiplied by four and shall not exceed the abrasion migration value shown in table I.

4.6.4 Efficiency. The efficiency for filter elements is computed as specified in 4.6.4.1 and shall meet the contaminant removal by weight specified in the efficiency test in table I.

4.6.4.1 Efficiency computation.

$$\text{Efficiency} = \frac{A - (B - C)}{A} \times 100 \qquad (1)$$

where: A = add value
B = contaminant value
C = blank value

4.6.4.2 Contaminant value (B). The filter element shall be installed in a test filter housing and placed in a test system (see figure 6) which has been previously flushed with pre-cleaned test fluid (see 4.4.1.1). Test fluid (2,000 mL) shall be added to the test system. Then, a slurry containing the add value of contaminants shown in table 1 shall be mixed with the test fluid.

The test fluid, at the rated flow specified in table I, shall be passed through the filter element and then through a previously cleaned and weighed filter membrane (0.8 micron absolute) (see 6.5). The test fluid shall be collected and the filter membrane weighed. The difference in weight between the filter membrane before and after this procedure is the weight of contaminant passing through the filter element and is the contaminant value (B) in equation 1.

Downloaded from http://www.everyspec.com

4.6.4.3 Add value (A). A free-flow dummy element shall be installed in a test filter housing and the procedure in 4.6.4.2 shall be repeated four times. The add value (A) in equation 1 is the average of the weights of contaminant collected in the four runs. The weight of the contaminant collected in each of the four runs shall be 95% or more of the weight of the contaminant added.

4.6.4.4 Blank value (C). The filter element shall be installed in a test filter housing and, with no contaminant added, the procedure in 4.6.4.2 shall be repeated. The weight of contaminant collected is the blank value (C) in equation 1. The blank value is the weight of contaminant attributed to the test system and filter element and shall be less than 0.0007 gram.

4.6.4.5 Multi-pass efficiency testing. If required, multi-pass efficiency testing, in accordance with ISO 4572, will be performed (see 6.2 and 6.3.1).

4.6.5 Maximum particle passed. The maximum particle passed is determined by following the procedure in 4.6.4.2 using the add value of carbonyl iron E contaminant specified in table I. The element with the lowest initial bubble point shall be used in this test. The largest carbonyl iron E particle size passed shall be no greater than the value specified in table I.

4.6.6 Pressure buildup and collapse. The filter element with the highest initial bubble point shall be installed in a test filter housing and placed in a test system (see figure 7) filled with test fluid pre-cleaned in accordance with 4.4.1.1. The rated flow shown in table I shall be maintained during this test. The clean-up filter shall be by-passed during this test. The pressure drop across the clean element shall be measured to verify that the clean element pressure drop does not exceed the value in table I. Add AC dust, in slurry, through the dust valve in the incremental amounts specified in table I at four minute intervals. The dust valve shall be completely open within the first five seconds of each four minute interval. A 100 mL sample of contaminated test fluid shall be collected, after passing through the filter element, during a 60 second period of each four minute interval. The sampling period shall begin 10 seconds prior to each contaminant add and continue for 60 seconds. When the minimum AC dust in table I is added, the element pressure drop in table I shall not be exceeded. Sampling shall be performed for each contaminant add until the differential pressure across the filter element reaches 150 psi. Count all particles in the following micron ranges: 5-15, 15-25, 25-50, 50-100, and greater than 100. The particle counts shall not exceed AIA/NAS 1638, Class 4. Additional AC dust shall be added until the minimum collapse pressure in table I is obtained. The minimum collapse pressure shall be imposed two times and held for two minutes each time. There shall be no sign of structural failure indicated through a visual inspection and the bubble point test in 4.6.2.2. For elements loaded to a differential pressure of 4,500 psi, the elements shall be subjected to the bubble point test in 4.6.2.2 after the elements have been loaded to a differential pressure of 3,000 psi.

4.6.7 Flow fatigue. The filter element shall be installed in a non-bypass type test filter housing, placed in a test system, and subjected to fatigue cycles with the test fluid at table I temperature and flow rate. The cycling rate and the number of fatigue cycles at each differential pressure are specified in table I. There shall be no evidence of damage as indicated by performing the bubble point test in 4.6.2.2.

Downloaded from http://www.everyspec.com

4.6.8 Abrasion migration. Abrasion migration is computed using the following equation:

$$X = A - C \qquad (2)$$

where: X = Abrasion migration
A = Analysis value (weight) of abrasion material with filter element and vibration
C = Blank value (weight) of abrasion material with a dummy filter element and without vibration

4.6.8.1 Blank value (C). A dummy element shall be installed in a test filter housing and placed in a test system (see figure 6) and flushed with pre-cleaned test fluid (see 4.4.1.1) for 10 minutes at rated flow (see table I). Close the test system, pressurize 2,000 mL of test fluid to obtain rated flow, pass the test fluid through the dummy element, and then through a previously cleaned and weighed filter membrane (0.8 micron absolute) (see 6.5). The test fluid shall be collected and the filter membrane weighed. The difference in weight between the filter membrane before and after this test is the blank value and must be less than 0.0007 gram. If this value is exceeded, flush the dummy element and test system with pre-cleaned test fluid (see 4.4.1.1) for 10 minutes at rated flow (see table I) and repeat this test.

4.6.8.2 Analysis value (A). The filter element shall be installed in a test filter housing filled with pre-cleaned test fluid (see 4.4.1.1), capped at both inlet and outlet ports, soaked at 275° ± 10°F for 72 hours, and then cooled to 70° to 90°F. The filter element and test filter housing shall be mounted in the normal position (bowl at bottom) and subjected to a sinusoidal vibration test in three mutually perpendicular axes. The rate of change of frequency shall be logarithmic. The vibration tolerances are: amplitude ±10% , frequency ±2%, and acceleration ±10%.

4.6.8.2.1 Resonance search. Determine filter element resonant frequencies by varying the level and frequency of applied vibration as specified in part 1 of table IV. Repeat the resonance search for each of the three axes.

4.6.8.2.2 Resonance dwell. The filter assembly shall be vibrated along each axis at the four most severe resonant frequencies for 30 minutes at each resonance. Vibration levels are given in part 1 of table IV and vibration times are given in part 1 of table V.

Downloaded from http://www.everyspec.com

TABLE IV. Vibration data

Part	Vibration level (double amplitude inch or gravity)	Frequency band (Hz)
1	0.1 inch	5 to 14
	1.0g	14 to 23
	0.036 inch	23 to 74
	10.0g	74 to 2,000
2	0.2 inch	5 to 10
	1.0g	10 to 18
	0.06 inch	18 to 81
	20.0g	81 to 2,000

TABLE V. Vibration schedule

Part	Total vibration time at resonance (min)	Number of resonances
1	0	0
	30	1
	60	2
	90	3
	120	4
2	30 minutes cycling per axis	0

4.6.8.2.3 Cycling test. The filter element and test filter housing shall be vibrated along each axis in accordance with the vibration levels, frequencies, and times in parts 1 and 2 of tables IV and V. Vibration frequencies shall be logarithmically swept from 5 to 2,000 to 5 Hz during a 20 minute interval. If a new resonant frequency occurs during this test, adjust the vibration frequency to maintain peak resonance.

4.6.8.2.4 Determine (A). Remove the inlet and outlet port caps and, without loss of test fluid, install the filter element in the test system used in 4.6.8.1 (do not flush). Close the test system, pressurize the test fluid to obtain rated flow, pass the test fluid through the filter element, and pass the test fluid through a previously cleaned and weighed filter membrane (0.8 micron absolute) (see 6.5). The test fluid shall be collected and the filter membrane weighed. The difference in weight between the filter membrane before and after this test is the analysis value (A) in equation (2).

4.6.8.2.5 Migration value (X). The computed abrasion migration value shall not exceed the abrasion migration value in table I.

4.6.8.3 Media migration. After completion of weight analysis, the filter membrane from 4.6.8.2.4 shall be examined for evidence of media migration using procedures specified in SAE ARP 598. There shall be no filter element media migration.

4.6.9 Fungus test. A fungus test shall be conducted in accordance with RTCA/DO-160. Any trace of fungus, corrosion, or mechanical failure constitutes cause for rejection.

Downloaded from http://www.everyspec.com

4.6.10 Element endurance. When specified (see 6.2), an endurance test shall be conducted demonstrating satisfactory performance (at a 90% confidence level) of 2,000 hours of operation with the test fluid at 275° ± 10°F and at rated flow.

5. PACKAGING

5.1 Packaging. For acquisition purposes, the packaging requirements shall be as specified in the contract or order (see 6.2). When actual packaging of materiel is to be performed by DoD personnel, these personnel need to contact the responsible packaging activity to ascertain requisite packaging requirements. Packaging requirements are maintained by the Inventory Control Point packaging activity within the Military Department or Defense Agency, or within the Military Department's System Command. Packaging data retrieval is available from the managing Military Department or Defense Agency automated packaging files, CD-ROM products, or by contacting the responsible packaging activity.

6. NOTES

(This section contains information of a general or explanatory nature which may be helpful, but is not mandatory.)

6.1 Intended use. The filter elements covered by this specification are intended for use in aircraft and missile hydraulic systems operating with hydraulic fluid conforming to MIL-H-5606, MIL-H-83282, and MIL-H-87257 at nominal operating pressures specified in table I. Each filter element is inserted in a canister prior to use in a hydraulic system.

6.2. Acquisition requirements. Acquisition documents must specify the following:

a. Title, number, and date of this specification.
b. Item identification (see 3.8, item e).
c. Issue of the DoDISS to be cited in the solicitation, and if required, the specific issue of individual documents referenced (see 2.1).
d. Part number.
e. Micron rating.
f. If the conformance inspection sampling inspection level is other than S-1 (i.e., normal, tightened, or reduced) (see 4.3.2).
g. If an endurance test is required (see 4.6.10).
h. Packaging requirements (see 5.1).
i. If qualification data is required (see 4.2).
j. If multi-pass efficiency testing is required (see 4.6.4.5).

6.3 Qualification. The attention of the contractors is called to the requirements with respect to products requiring qualification. Awards will be made only for products which are, at the time of award of contract, qualified for inclusion in the Qualified Products List (QPL No. 83860) whether or not such products have actually been listed by that date. In order that the

Downloaded from http://www.everyspec.com

manufacturers may be eligible to be awarded contracts or purchase orders for the products covered by this specification, they are urged to arrange to have the products that they propose to offer to the Federal Government tested for qualification. Information pertaining to qualification of products may be obtained from Oklahoma City Air Logistics Center/TICLA, 3001 Staff Drive, Suite 1AE1-101A, Tinker AFB, Oklahoma 73145-3036.

6.3.1 Efficiency testing. Future changes to this specification will incorporate multi-pass efficiency testing, in accordance with ISO 4572 which yields a Beta ratio, and ultimately a filter element efficiency rating at various particle sizes. Contractors seeking qualification of their filter elements are encouraged to incorporate multi-pass efficiency testing along with the existing efficiency test. Multi-pass efficiency testing is also encouraged when QPL items require requalification.

6.4 Filter. Type HA Millipore or equivalent.

6.5 Filter. Type AA Millipore or equivalent.

6.6 Subject term (key word) listing.

Bubble point
Immersion
Filter element efficiency
Flow fatigue
Hydraulic
5 Micron
Beta ratio
Multi-pass efficiency

6.7 Changes from previous issue. Marginal notations are not used in this revision to identify changes with respect to the previous issue due to the extent of the changes.

Custodians:
Air Force - 99

Preparing Activity:
Air Force - 71
(Project 1650-0615)

Downloaded from http://www.everyspec.com

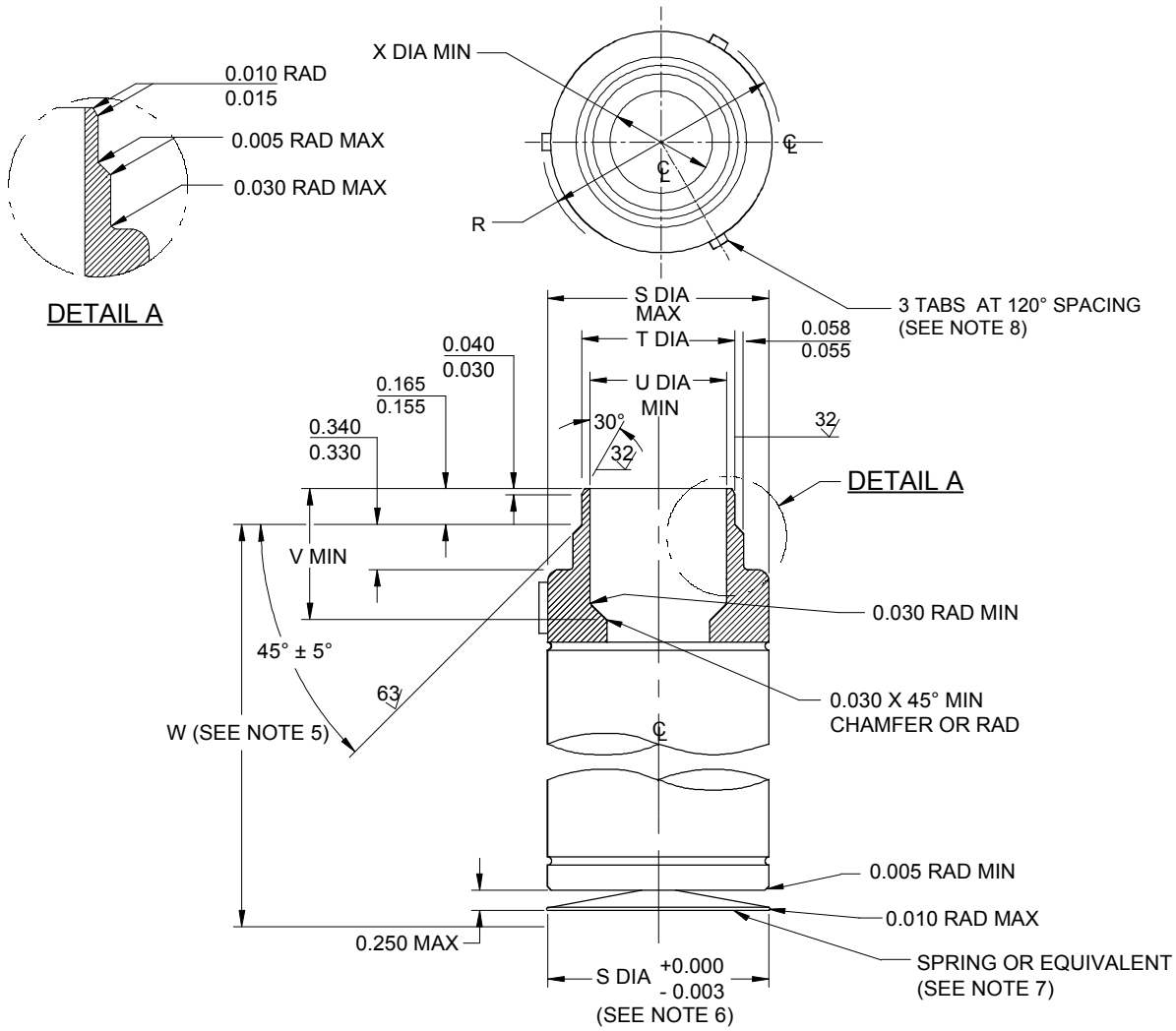

PART NUMBER	R +0.000 -0.010	S	T ± 0.001	U MIN	V MIN	W	X MIN
M83860/1-6	1.250	1.137	0.748	0.670	0.490	3.625	0.435
M83860/1-8	1.250	1.137	0.748	0.670	0.490	4.095	0.435
M83860/1-10	1.415	1.290	0.875	0.790	0.600	5.235	0.555
M83860/1-12	1.625	1.500	1.122	1.035	0.690	6.235	0.715
M83860/1-16	1.985	1.845	1.372	1.155	0.760	7.235	0.995

NOTES:
1. FINISH 100 ROOT MEAN SQUARE (RMS) ALL OVER EXCEPT AS NOTED.
2. DIMENSIONS IN INCHES, UNLESS OTHERWISE SPECIFIED.
3. TOLERANCES: ANGLES ± 2°.
4. CONCENTRICITY: SURFACES OF DIAMETERS T, R, AND S MUST BE CONCENTRIC WITHIN 0.012 TOTAL INDICATOR READING.
5. ELEMENT LENGTH AND SPRING CHARACTERISTICS MUST BE SUCH AS TO PROVIDE AXIAL LOADING OF 75 TO 300 LBS WHEN COMPRESSED TO W ± 0.010.
6. WHEN COMPRESSED TO DIMENSION W.
7. SPRING OR EQUIVALENT SHALL BE DESIGNED NOT TO ENTER FILTER BOWL GROOVE.
8. TAB WIDTH IS 0.094 ± 0.032.
9. THIS DRAWING IS NOT TO SCALE.

FIGURE 1. M83860/1-6, -8, -10, -12, -16 filter element dimensions

Downloaded from http://www.everyspec.com

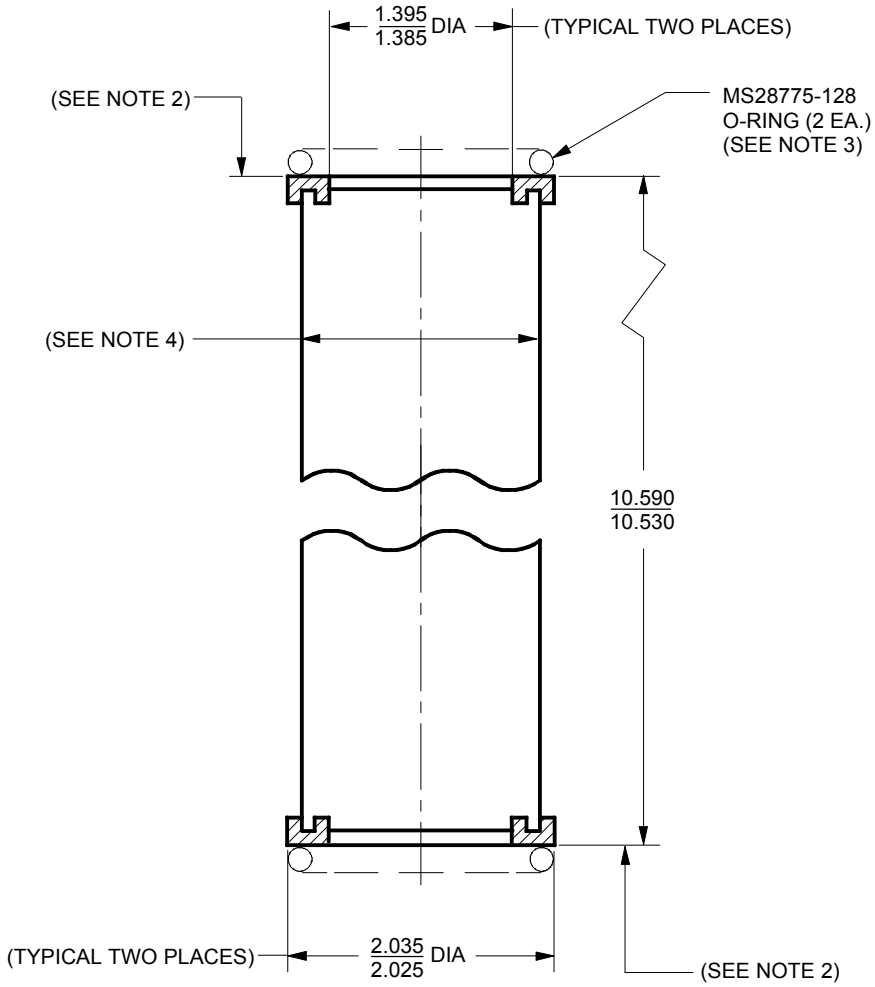

NOTES: 1.DIMENSIONS IN INCHES, UNLESS OTHERWISE SPECIFIED.
2. PERPENDICULARITY: TOP AND BOTTOM SURFACES SHALL BE PERPENDICULAR TO INSIDE DIAMETER WITHIN 0.015 TOTAL INDICATOR READING.
3. 0-RINGS SHALL BE SUPPLIED WITH FILTER ELEMENT.
4. MAXIMUM DIAMETER SHALL NOT EXCEED DIAMETER OF FILTER ELEMENT END CAPS.
5. THIS DRAWING IS NOT TO SCALE.

FIGURE 2. M83860/2 filter element dimensions

Downloaded from http://www.everyspec.com

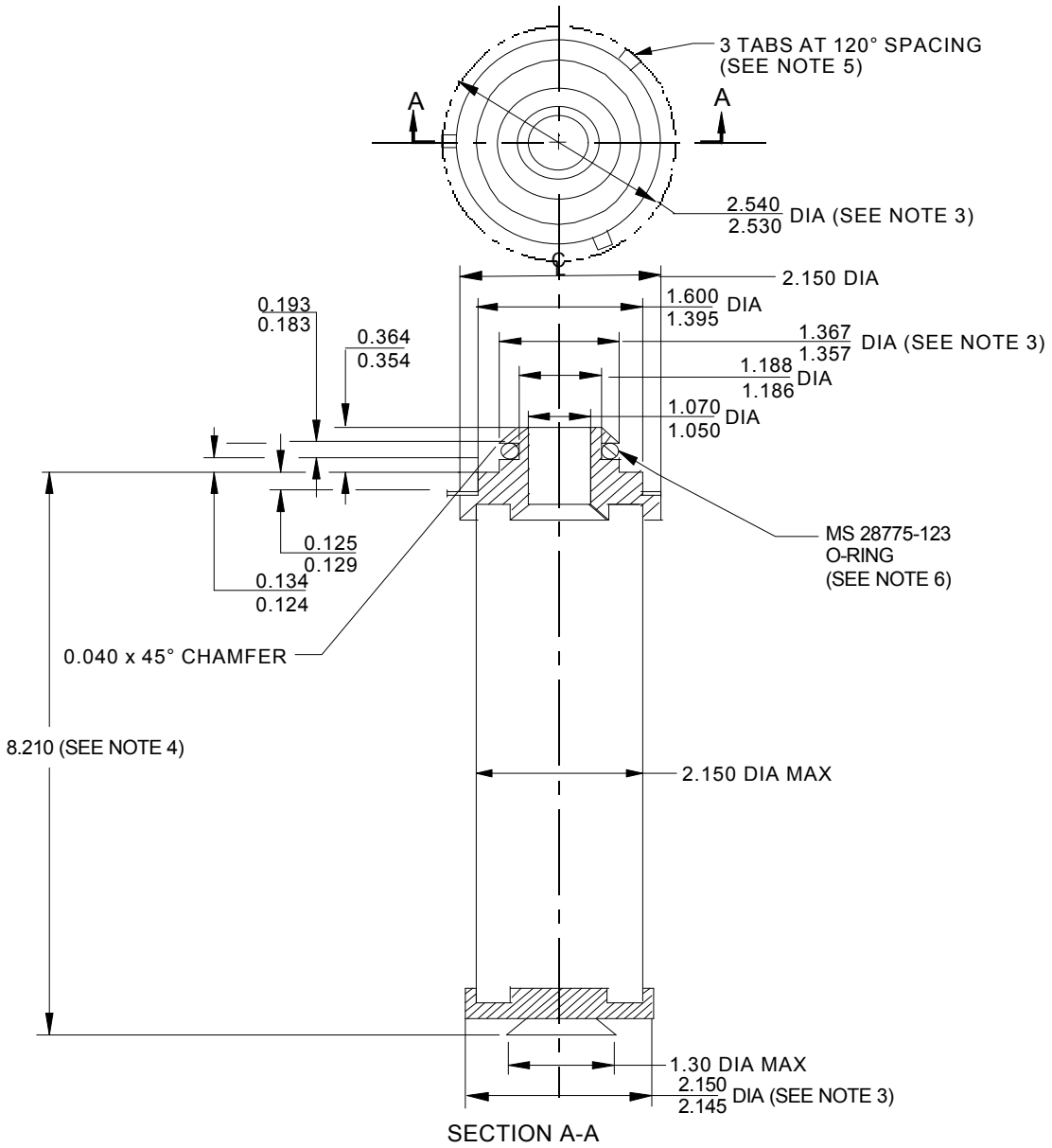

NOTES:
1. DIMENSIONS IN INCHES, UNLESS OTHERWISE SPECIFIED.
2. TOLERANCES: DECIMALS ± 0.015, ANGLES ± 2°.
3. CONCENTRICITY: SURFACES OF DIAMETERS SHALL BE CONCENTRIC WITHIN 0.010 TOTAL INDICATOR READING. THE 1.367/1.357 DIAMETER IS THE DATUM.
4. ELEMENT LENGTH AND SPRING CHARACTERISTICS MUST BE SUCH AS TO PROVIDE AXIAL LOADING OF 75 TO 300 LBS WHEN COMPRESSED TO 8.210.
5. TAB WIDTH IS 0.19 ± 0.010.
6. FINISH 63 ROOT MEAN SQUARE (RMS) ALL O-RING GROOVE SURFACES.
7. THIS DRAWING IS NOT TO SCALE.

FIGURE 3. M83860/3 filter element dimensions

Downloaded from http://www.everyspec.com

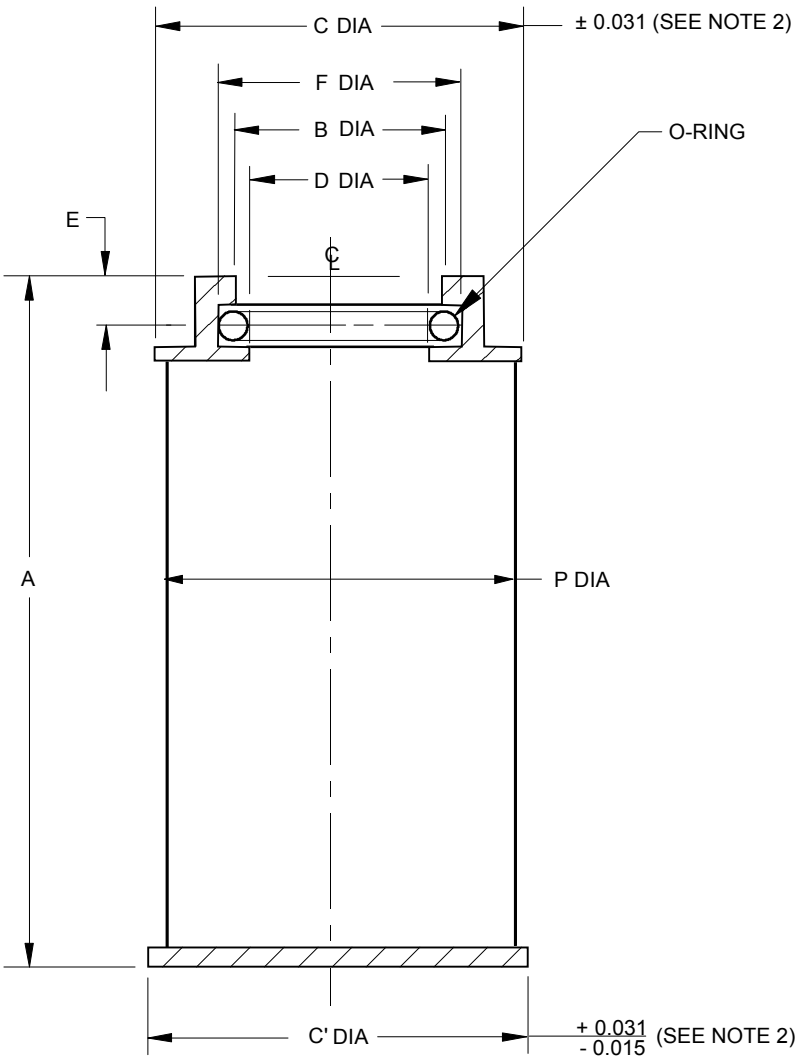

PART NUMBER	A + 0.062 - 0.000	B ± 0.015	C&C'	D NOM	E MAX	F	P MAX	"O" RING
M83860/4-1	4.437	1.015	1.750	1.000	0.218	1.241 1.243	1.800	MS9388-214
M83860/4-2	4.625	0.640	1.125	0.625	0.125	0.798 0.805	1.125	MS28775-114
M83860/4-3	4.437	1.015	1.750	1.000	0.218	1.237 1.243	1.710	MS9388-214

NOTES: 1. DIMENSIONS IN INCHES, UNLESS OTHERWISE SPECIFIED.
2. CONCENTRICITY: SURFACES OF DIAMETERS C AND C' MUST BE CONCENTRIC WITHIN 0.030 TOTAL INDICATOR READING.
3. THIS DRAWING IS NOT TO SCALE.

FIGURE 4. M83860/4-1, -2, -3 filter element dimensions

Downloaded from http://www.everyspec.com

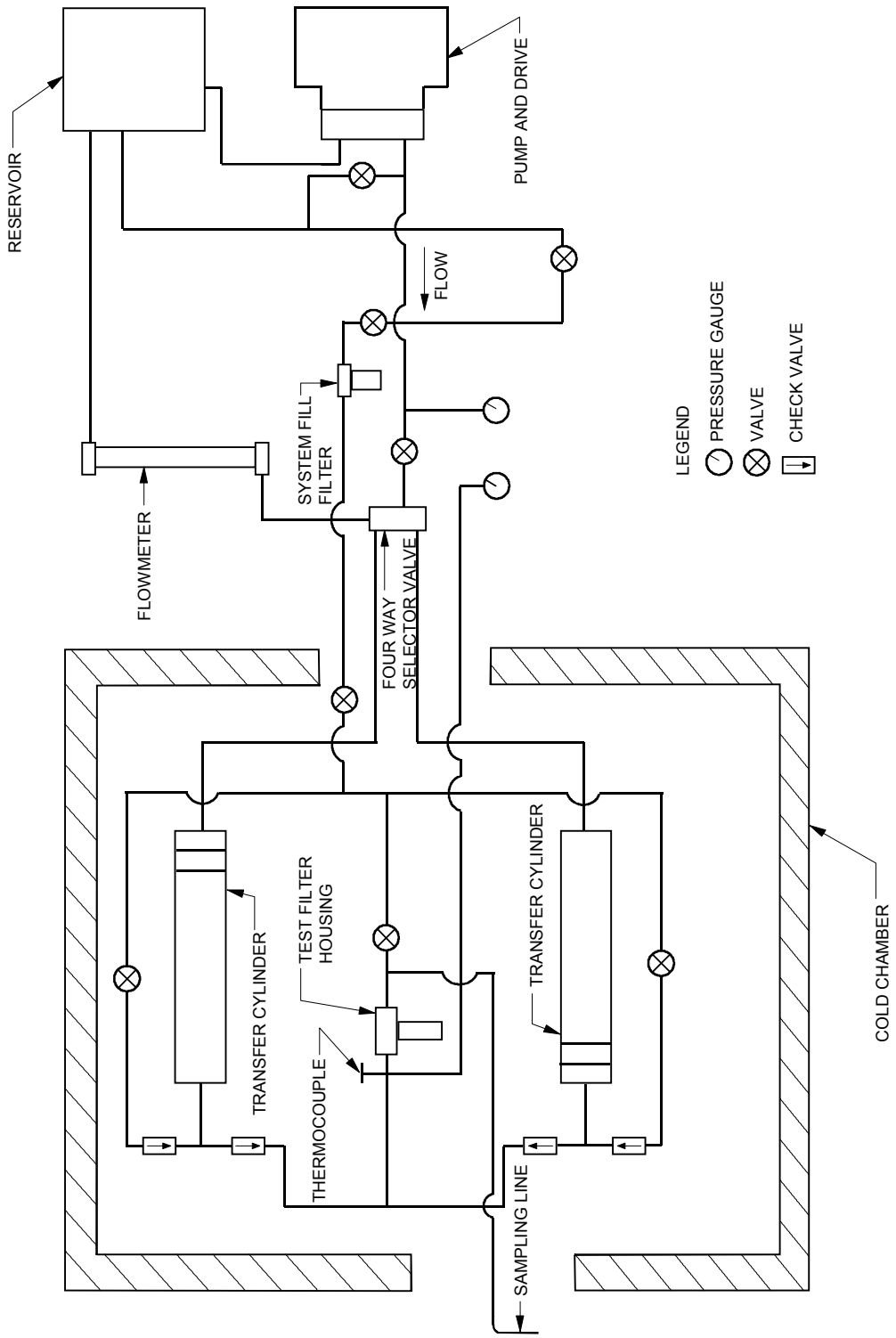

FIGURE 5. Typical setup for cold start test

Downloaded from http://www.everyspec.com

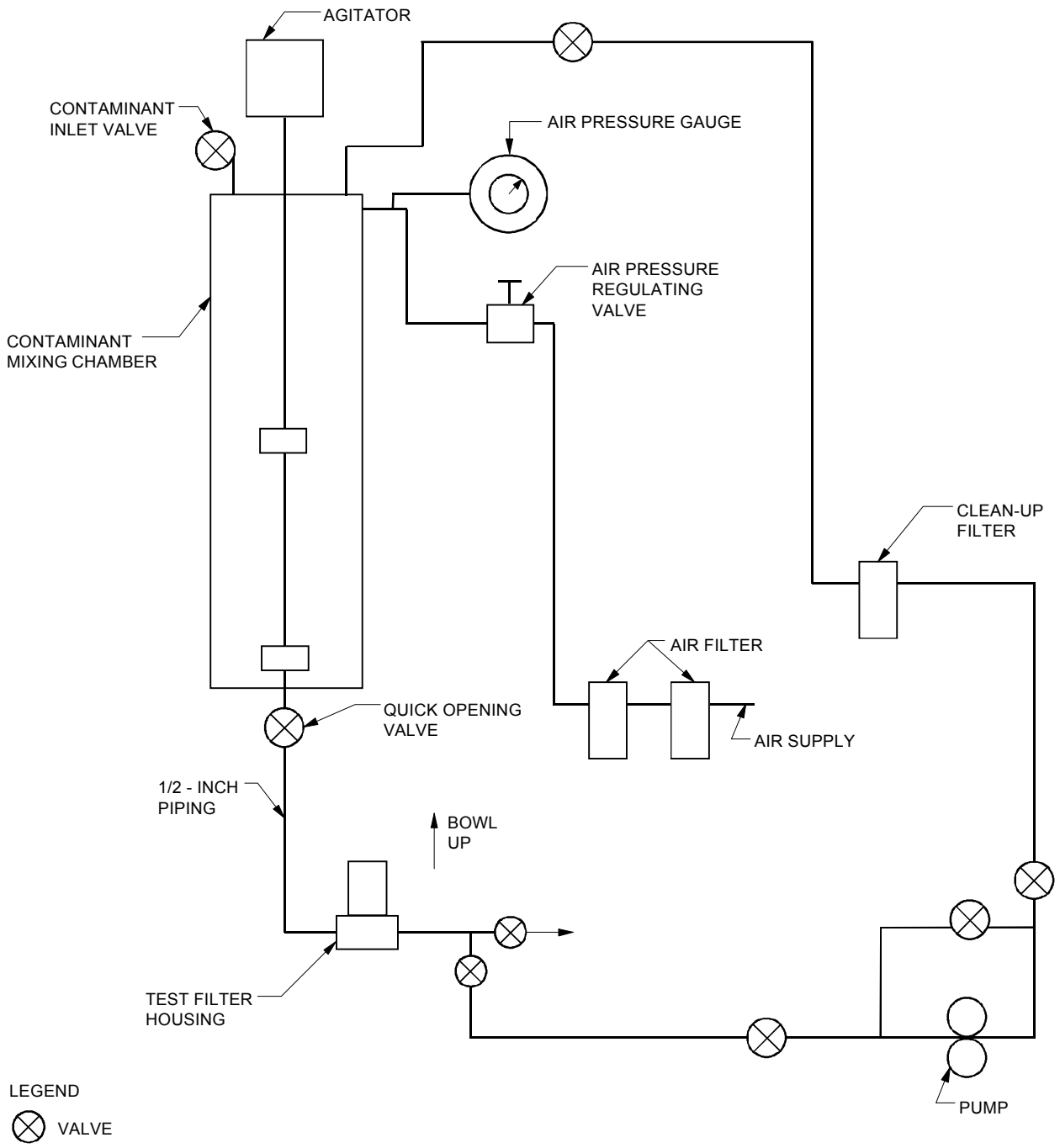

FIGURE 6. Typical setup for efficiency test

Downloaded from http://www.everyspec.com

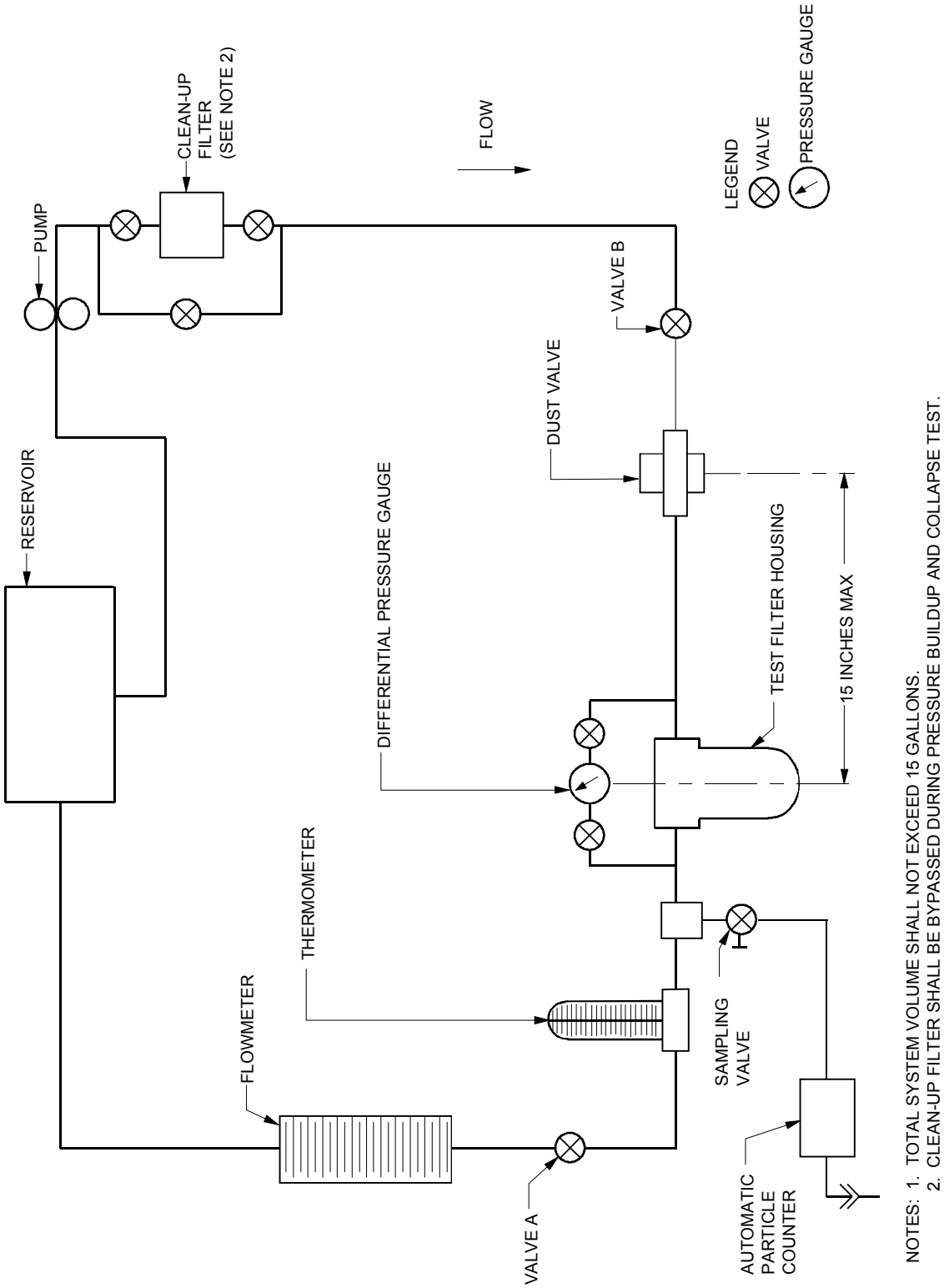

NOTES: 1. TOTAL SYSTEM VOLUME SHALL NOT EXCEED 15 GALLONS.
2. CLEAN-UP FILTER SHALL BE BYPASSED DURING PRESSURE BUILDUP AND COLLAPSE TEST.

FIGURE 7. Typical setup for pressure buildup and collapse test

Downloaded from http://www.everyspec.com

STANDARDIZATION DOCUMENT IMPROVEMENT PROPOSAL

INSTRUCTIONS

1. The preparing activity must complete blocks 1, 2, 3, and 8. In block 1, both the document number and revision letter should be given.
2. The submitter of this form must complete blocks 4, 5, 6, and 7.
3. The preparing activity must provide a reply within 30 days from receipt of the form.

NOTE: This form may not be used to request copies of documents, nor to request waivers, or clarification of requirements on current contracts. Comments submitted on this form do not constitute or imply authorization to waive any portion of the referenced document(s) or to amend contractual requirements.

I RECOMMEND A CHANGE:	1. DOCUMENT NUMBER MIL-PRF-83860C(USAF)	2. DOCUMENT DATE (YYMMDD) 980131

3. DOCUMENT TITLE

FILTER ELEMENTS, DISPOSABLE, FLUID PRESSURE, HYDRAULIC LINE 5 MICRON ABSOLUTE

4. NATURE OF CHANGE *(Identify paragraph number and include proposed rewrite, if possible. Attach extra sheets as needed.)*

5. REASON FOR RECOMMENDATION

6. SUBMITTER

a. NAME *(Last, First, Middle Initial)*	b. Organization	
c. ADDRESS *(Include zip code)*	**d. TELEPHONE** *(Include Area Code)* (1) Commercial (2) Autovon *(if applicable)*	**7. DATE SUBMITTED (YYMMDD)**

8. PREPARING ACTIVITY

a. NAME	**b. TELEPHONE** *(Include Area Code)*	
Harlena Edwards	(1) Commercial (405) 736-5960	(2) Autovon 336-5960
c. ADDRESS ***(Include Zip Code)*** ***OC-ALC/TICLA*** ***3001 Staff Drive Ste 1AE1-101A*** ***Tinker AFB, OK 73145-3029***	**IF YOU DO NOT RECEIVE A REPLY WITHIN 45 DAYS, CONTACT:** **Defense Quality and Standardization Office** **5203 Leesburg Pike, Suite 1403, Falls Church, VA 22041-3446** **Telephone (703) 756-2340 Autovon 289-2340**	

DD Form 1426, OCT 89 *Previous editions are obsolete.* 198/290