Downloaded from http://www.everyspec.com

INCH- POUND
MIL-PRF-83174D
11 May 2007
SUPERSEDES
MIL-PRF-83174C
w/amendment 1
14 August 1998

PERFORMANCE SPECIFICATION

TRANSMITTER, ACCELEROMETER, AXIAL

This specification is approved for use by all Departments and Agencies of the Department of Defense.

1. SCOPE

1.1 Scope. This specification covers three types of axial accelerometer transmitters.

1.2 Classification. Transmitters will be of the following types, as specified (see 6.2):

TRU-106/A-1 Senses normal acceleration (-3.0 to +9.0g)
TRU-106/A-2 Senses normal acceleration (-1.0 to +4.0g)
TRU-107/A Senses transverse acceleration (-1.0 to +1.0g)

2. APPLICABLE DOCUMENTS

2.1 General. The documents listed in this section are specified in sections 3 and 4 of this specification. This section does not include documents cited in other sections of this specification or recommended for additional information or as examples. While every effort has been made to ensure the completeness of this list, document users are cautioned that they must meet all specified requirements documents cited in sections 3 and 4 of this specification, whether or not they are listed.

2.2 Government documents.

2.2.1 Specifications, standards, and handbooks. The following specifications, standards, and handbooks form a part of this document to the extent specified herein. Unless otherwise specified, the issues of these documents are those cited in the solicitation or contract.

.

STANDARDS

DEPARTMENT OF DEFENSE

MIL-STD-461 REQUIREMENTS FOR THE CONTROL OF ELECTROMAGNETIC INTERFERENCE CHARACTERISTICS OF SUBSYSTEMS AND EQUIPMENT

MIL-STD-704 Aircraft Electrical Power Characteristics

(Copies of these documents are available online at http://assist.daps.dla.mil/quicksearch/ or from the Standardization Documents Order Desk, 700 Robbins Avenue, Building 4D, Philadelphia, PA 19111-5094.)

Comments, suggestions, or questions on this document should be addressed to: Oklahoma City Air Logistics Center/ENEP, 3001 Staff Drive, Suite 2AG-68A, Tinker AFB, OK 73145-3036 or emailed to ocalc.enrs.sma@tinker.af.mil. Since contact information can change, you may want to verify the currneny of this address information using the ASSIST database at http://assist.daps.dla.mil.

Downloaded from http://www.everyspec.com

2.3 Order of precedence. In the event of a conflict between the text of this document and the references cited herein, the text of this document takes precedence. Nothing in this document, however, supersedes applicable laws and regulations unless a specific exemption has been obtained.

2.4 Non-Government publications. The following document forms a part of this document to the extent specified herein. Unless otherwise specified, the issues of these documents are those cited in the solicitation or contract.

AMERICAN SOCIETY FOR TESTING AND MATERIALS (ASTM)

ASTM B117 Operating Salt Spray (Fog) Apparatus, Standard Practice for (DoD-adopted)

(Application for copies should be addressed to the American Society for Testing and Materials, 100 Barr Harbor Drive, West Conshohocken, PA 19428-2959.)

3. REQUIREMENTS

3.1 First article. When specified (see 6.2), a sample shall be subjected to first article inspection in accordance with 4.2.

3.2 Recycled, recovered, or environmentally preferable materials. Recycled, recovered, or environmentally preferable materials should be used to the maximum extent possible provided that the material meets or exceeds the operational and maintenance requirements, and promotes economically advantageous life cycle costs.

3.3 Materials. Unless otherwise specified, nonmagnetic and nonferrous materials shall be used. Materials shall not produce deleterious fumes and shall be suitably treated to resist corrosion due to electrolytic decomposition, fungus, salt spray, and any other conditions that may be encountered during operation, use, or storage. Nonferrous materials contained within hermetically sealed enclosures shall be considered suitably protected from corrosion.

3.4 Interface.

3.4.1 Dimensions. The transmitter shall conform to the dimensions in Figure 1.

3.4.2 Visual. The transmitter shall possess an aligning device to prevent misorientation or misalignment of the transmitter during installation (see Figure 1).

3.4.3 Connectors. The electrical connector for the TRU-106/A shall conform to part number MS3113H12C10P. A connector conforming to part number MS3113H12C10PX shall be used on the TRU-107/A. The transmitter connections shall be in accordance with table I.

TABLE I. Transmitter Connections

Connector Pins	Function
A	28 V power return
B	28 V power
C	Signal output
D	Signal ground
E	Test (if required)
F	Test (if required)
G	Case
H	Spare

Downloaded from http://www.everyspec.com

3.4.4 Mounting screws and holes. Non-reflective, round-head, brass machine screws conforming to .190-32UNF-2A shall be used to mount the transmitter on a 3/16-inch thick panel and shall be provided with each transmitter. Screws shall be attached securely to the transmitter.

3.4.5 Weight. The transmitter shall not exceed 0.5 pound.

3.4.6 Power. The transmitter shall operate on 28 Vdc power, supplied externally, and operate continuously at dc voltages ranging from 25 to 31. Power characteristics shall conform to MIL-STD-704.

3.5 Environmental conditions. The transmitter shall be capable of operation under the following conditions.

a. Operational temperatures ranging from -65° to 160°F and storage temperatures of -80° to 205°F

b. Altitudes from -1,200 to 80,000 feet

c. Relative humidity up to 95%

d. Rainfall of up to 5 inches per hour at 40 mph

e. Exposure to salt atmosphere between a pH of 6.5 and 7.2 at 95°F

f. Exposure to blowing dust at a velocity up to 5,700 ft/min at a concentration of 0.3 $\pm$ 0.2 g/ft^{3}

g. Exposure to blowing sand at a velocity up to 5,700 ft/min at a concentration of 0.0623 $\pm$ 0.015 g/ft^{3}

h. Vibration of 0.15 g^{2}/Hz cycled from 300 to 1,000 Hz then decreasing at a rate of -9 dB per octave to 2,000 Hz

i. Acceleration force of 10g for 1 minute duration

j. Application of 500 Vdc for 10 seconds duration

k. Thermal shock consisting of rapid temperature changes between 41° and 185°F

3.6 Performance.

3.6.1 Ranges. The transmitter shall measure normal linear acceleration as shown in Table II. Accelerometer shall withstand over range acceleration as shown in Table II without changing the accuracy of the output. In addition, the transmitter shall withstand at least 50% over range in any axis.

TABLE II. Ranges

Accelerometer	Normal range (g)	Over range (g)
TRU-106/A-1	-3.0 to +9.0	-4.5 to +13.5
TRU-106/A-2	-1.0 to +4.0	-1.5 to +6.0
TRU-107/A	-1.0 to +1.0	-1.5 to +1.5

3.6.2 Resolution. The resolution shall be 0.02% or better of full scale.

3.6.3 Static performance. When the transmitter is properly mounted in the aircraft, the electrical output under static conditions shall indicate +1g in the normal axis (see 6.3).

3.6.4 Reliability. The transmitter shall have a minimum mean time between failures (MTBF) of 10,000 hours.

3.6.5 Maintainability. No special tools shall be required for the installation or replacement of the transmitter.

Downloaded from http://www.everyspec.com

3.6.6 Axis alignment. The alignment of the transmitter shall be within $\pm 1/4^{o}$ from the sensitive axis.

3.6.7 Accuracy. The maximum allowable deviation (output error) shall be 1.0% or less of full scale.

3.6.8 Electromagnetic interference. The transmitter shall neither cause nor be susceptible to electromagnetic interference.

3.6.9 Repeatability. The difference between transmitter output readings shall be less than 0.20% of full scale when the input is reapplied.

3.6.10 Frequency response. Frequency response of the transmitter in any axis shall be flat within $\pm$1.5% of static response from 0 to 8 Hz at room temperature, $\pm$3.0% over the specified temperature range, and shall be down 18 dB or more at 16 Hz. Thereafter, the roll-off approach shall be 36 dB per octave.

3.6.11 Cross-axis acceleration. The transmitter output shall not change more than 0.005g for each 1g of cross-axis acceleration (90° to the sensitive axis).

3.6.12 Magnetic effect. When the transmitter is held in a magnetic field having a horizontal intensity of 0.18 $\pm$ 0.01 oersted, in various positions, oriented magnetically east or west and not more than 12 inches from the center of a free magnet, the deflection of the magnet shall not exceed 5 degrees.

3.6.13 Output impedance. At full scale output the transmitter shall have an output impedance of less than or equal to 0.5 ohm when driving a 1,000 $\pm$ 1% ohm load.

3.6.14 Electrical output. The output of the transmitter shall be a dc voltage directly proportional to the acceleration on the sensitive axis. The electrical output range shall not exceed 10 Vdc (see 3.6.1). The required input-output characteristics are shown in Table IV.

3.6.15 Interchangeability. All parts having the same manufacturer's part number shall be functionally and dimensionally interchangeable.

3.6.16 Case. The case shall be hermetically sealed to prevent atmospheric involvement in operation.

3.6.17 Leakage. The transmitter seals shall allow no more than a 10% change of pressure over 1,000 hours with a pressure differential of 1 atmosphere.

4 VERIFICATION

4.1 Classification of inspections. The inspection requirements specified herein are classified as follows:

a. First article inspection (see 4.2).
b. Conformance inspection (see 4.3).

4.2 First article inspection. First article inspection shall be performed on at least 13 transmitters of each type represented. Three of the transmitters shall be subjected to tests indicated in 4.6, except 4.6.18. The remaining transmitters (10 minimum) shall be subjected only to test 4.6.18.

4.3 Conformance inspection. Conformance inspection shall include the tests indicated in 4.3.1 and 4.3.2.

4.3.1 Individual tests. Each transmitter shall be subjected to the tests indicated in 4.6.1 through 4.6.6.

4.3.2 Sampling tests. Transmitters shall be selected as indicated below and subjected to all of the tests specified in 4.6, except 4.6.18. In addition, 6 of each group of up to 200 shall be selected and tested according to 4.6.18.

Downloaded from http://www.everyspec.com

Number of Items	Quantity of Each Type Number
First 10	1
Next 90	2
Each additional 100	2

4.4 Inspection conditions. Unless otherwise specified, all inspections shall be performed in accordance with the test conditions specified in 4.4.1, 4.4.2, and 4.4.3.

4.4.1 Voltage input. The transmitter shall be tested with 28 Vdc power input.

4.4.2 Attitude. The transmitter shall be tested in its normal operating position.

4.4.3 Environmental tests. Prior to performing environmental tests, the transmitter shall be operated under ambient conditions at the test site for baseline data.

4.5 Requirements cross-reference matrix. Table III provides a cross-reference matrix of section 3 requirements tested or verified in the paragraphs below.

TABLE III. Requirements cross-reference matrix

REQUIREMENT	VERIFICATION
3.1	4.2
3.3	4.6.1
3.4	4.6.17
3.5	4.6.9, 4.6.10, 4.6.11, 4.6.14, 4.6.15
3.6.1	4.6.3, 4.6.5
3.6.2	4.6.3
3.6.3	4.6.3
3.6.4	4.6.18
3.6.5	4.6.1
3.6.6	4.6.1
3.6.7	4.6.3
3.6.8	4.6.13
3.6.9	4.6.4
3.6.10	4.6.3
3.6.11	4.6.6
3.6.12	4.6.8
3.6.13	4.6.12
3.6.14	4.6.3
3.6.15	4.6.1
3.6.16	4.6.2, 4.6.16
3.6.17	4.6.2

4.6 Tests.

4.6.1 Examination of product. The transmitter shall be examined for damage and defects. Noncompliance with any requirement or presence of one or more defects shall constitute cause for rejection.

Downloaded from http://www.everyspec.com

4.6.2 Leakage test. Using a leak detector, the initial maximum detected leak rate at a differential pressure of 1 atmosphere shall not allow greater than a 10% change in internal pressure over 1,000 hours with a pressure differential of 1 atmosphere.

4.6.3 Accuracy test.

4.6.3.1 TRU-106/A. The TRU-106/A transmitter shall be mounted on a test stand in the normal operating position and subjected to inputs throughout its complete normal acceleration range and produce outputs as shown Table IV.

4.6.3.2 TRU-107/A. The TRU-107/A transmitter shall be mounted on a test stand in the transverse operating position and subjected to inputs throughout its complete normal acceleration range and produce outputs as shown in Table IV.

TABLE IV. Transmitter output

Transmitter	Input acceleration (g)	Output voltage (V) ±0.1
TRU-106/A-1	-3	-1.67
	-1	-0.56
	0	0.00
	+1	+0.56
	+3	+1.68
	+5	+2.78
	+7	+3.89
	+9	+5.00
TRU-106/A-2	-1	-1.25
	0	0.00
	+1	+1.25
	+2	+2.50
	+3	+3.75
	+4	+5.00
TRU-107/A	-1.0	-5.00
	-0.5	-2.50
	+0.0	0.00
	+0.5	+2.50
	+1.0	+5.00

4.6.4 Repeatability.

4.6.4.1 Normal acceleration. The TRU-106/A transmitter shall be mounted on a test stand so that it is sensitive in the normal axis and shall be properly connected with power applied. Acceleration inputs shall be applied to TRU-106/A-1 at -3, 0, +3, +7, and +9g consecutively, and to TRU-106/A-2 at -1, 0, +1, +2, +3, and +4g consecutively. At each of these accelerations, the output shall be recorded and the procedure repeated two times. The readings obtained in 4.6.3 shall not vary from the average of these three readings by more than 0.2% of full scale or 10 mV.

4.6.4.2 Transverse acceleration. The TRU-107/A transmitter shall be mounted on a test stand so that it is sensitive in the transverse axis and shall be properly connected with power applied. Acceleration inputs shall be applied to the transmitter at -1, 0, and +1g consecutively. At each of these accelerations, the output shall be recorded and the procedure repeated two times. The readings obtained in 4.6.3 shall not vary from the average of these three readings by more than 0.2% of full scale or 10 mV.

4.6.5 Overrange acceleration. The transmitter shall be mounted on the test stand with power applied so that it senses accelerations applicable to the type tested. Overrange accelerations shall then be applied to the transmitter,

Downloaded from http://www.everyspec.com

and the output shall be noted. The test points for each transmitter and the outputs shall be as specified in Table V.

TABLE V. Overrange acceleration test points

Transmitter	Input (g)	Output (V) ± 0.10
TRU-106/A-1	-4.5 +13.5	-2.51 +7.50
TRU-106/A-2	-1.5 +6.0	-1.88 +7.50
TRU-107/A	-1.5 +1.5	-7.50 +7.50

4.6.6 Cross-axis acceleration.

4.6.6.1 TRU-106/A. TRU-106/A-1 or TRU-106/A-2 shall be mounted on the test stand so that it senses linear acceleration along the normal axis of the aircraft. With the transmitter properly connected and power applied, the transmitter output shall be recorded. A 1g cross-axis longitudinal acceleration shall be applied to the transmitter, and the output recorded. This procedure shall be repeated with a 1g cross-axis transverse acceleration and the output recorded. Neither cross-axis acceleration shall cause the normal acceleration output to vary by more than 0.005g.

4.6.6.2 TRU-107/A. TRU-107/A shall be mounted on the test stand so that it senses linear acceleration along the transverse axis of the aircraft. With power applied, a 1g transverse acceleration shall be applied to the transmitter and the output recorded. Upon completion of the calibration check, a 1g transverse acceleration shall be applied to the transmitter with a 1g cross-axis normal acceleration; and the output recorded. This procedure shall be repeated with a 1g cross-axis longitudinal acceleration. The cross-axis accelerations shall not cause the transverse acceleration output to vary by more than 0.005g.

4.6.7 Voltage variation. Each transmitter shall be tested for accuracy and repeatability in accordance with 4.6.3 and 4.6.4 at 22.5 and 30 Vdc.

4.6.8 Magnetic effect. This test shall be conducted first with no power applied to the transmitter and then with the transmitter operating at rated power. The transmitter shall be held in a magnetic field with a horizontal intensity of 0.18 0.01 oersted, in various positions, oriented magnetically east or west, and 12 inches from the center of a 1 to 1.5 inch long free magnet. The maximum deflection of the magnet shall not exceed 5 degrees. An aircraft compass with the compensating magnets removed may be used as the free magnet for this test.

4.6.9 Dielectric strength. A potential of 500 Vdc shall be applied between isolated pins, and between pins and the case (except pin G), for a period of 10 seconds. There shall be greater than 20 mega ohms of insulation resistance in all cases, and there shall be no breakdown of insulation. There shall be less than 0.1 ohm between pin G and the case.

4.6.10 Low temperature operational. With power applied, the transmitter shall be properly connected, placed in a chamber, and maintained at a temperature of -65°± 4°F for 4 hours. While at this temperature, the transmitter shall pass the tests specified in 4.6.1 and 4.6.3.1 or 4.6.3.2, as applicable. The output tolerance for the accuracy test shall be ±0.15 V.

4.6.11 High temperature operational. With power applied, the transmitter shall be properly connected, placed in a chamber, and maintained at a temperature of 160°± 4°F for 4 hours. While at this temperature, the transmitter shall pass the tests specified in 4.6.1 and 4.6.3.1 or 4.6.3.2, as applicable. The output tolerance for the accuracy test shall be ±0.15 V.

Downloaded from http://www.everyspec.com

4.6.12 Output impedance. The transmitter shall be mounted as described in 4.6.3. Full scale acceleration shall be applied with the output loaded with 1,000 ± 10 ohms. The output voltage shall not change from the unloaded output voltage by more than the unloaded output voltage x 0.5 ohm ÷ 1,000 ohms.

4.6.13 Electromagnetic interference. The electromagnetic interference tests shall be conducted in accordance with the following test methods from MIL-STD-461E. The transmitter shall not exhibit any malfunction, degradation of performance, or deviation from specified indications, beyond the tolerances indicated in this document when subjected to the conditions described below.

4.6.13.1 CS101. The transmitter shall be tested at the limit level given in Figure 3 using the test method described in MIL-STD-461E, Section 5, Method CS101.

4.6.13.2 CS114. The transmitter shall be tested at the calibration limit level given in Figure 4 using the test methods described in MIL-STD-461E, Section 5, Method CS114.

4.6.13.3 CS115. A 30 Hz test signal, applied for one minute with a duty cycle of 50%, a pulse width of at least 30 nanoseconds (ns), and rise/fall times of less than or equal to 2 ns shall be used to test the transmitter using the test methods described in MIL-STD-461E, Section 5, Method CS115.

4.6.13.4 CS116. The transmitter shall be tested with a test signal consisting of a damped sinusoid with the following characteristics and the normalized waveform given in Figure 5 using the test method described in MIL-STD-461E, Section 5, Method CS116.

$$e^{-(\pi ft)/Q} \sin(2\pi ft)$$

where: f = test frequency (Hz)
t = time (s)
Q = damping factor, 15 ± 5

The damping factor (Q) shall be determined as follows:

$$Q = (\pi(N-1)/(\ln(I_P/I_N))$$

where: N = cycle number (i.e., N = 2, 3, 4,...)
I_P = 5 amps, peak current at 1st cycle
I_N = peak current at Nth cycle
ln = natural log

4.6.13.5 RS103. The transmitter shall be tested with radiated electric fields with a limit of 10 volts per meter (V/m) from 30 MHz to 1 GHz and 60 V/m from 1 to 18 GHz using the test methods described in MIL-STD-462D, Section 5, Method RS103.

4.6.14 Environmental tests. The transmitter shall be subjected to the following environmental tests.

4.6.14.1 High temperature storage. With the transmitter de-energized, the transmitter shall be exposed to a constant 160°F and a maximum relative humidity of 1% for 48 hours at normal storage configuration. At the end of the 48 hours, while still at that temperature, the transmitter shall pass the tests specified in 4.6.1 and 4.6.3.1 or 4.6.3.2, as applicable. The accuracy of the output tolerance shall be ±0.15 V. This test may be performed in conjunction with the temperature shock and vibration tests.

4.6.14.2 Low temperature storage. With the transmitter de-energized, the transmitter shall be exposed to a constant -65°F for 48 hours at normal storage configuration. At the end of the 48 hours, while still at that temperature, the transmitter shall pass the tests specified in 4.6.1 and 4.6.3.1 or 4.6.3.2, as applicable. The

Downloaded from http://www.everyspec.com

accuracy of the output tolerance shall be ±0.15 V.

4.6.14.3 Temperature-altitude (cycling). With the transmitter de-energized, this test shall be conducted in an environmental chamber at ambient conditions. The rates of temperature and pressure changes shall be the maximum attainable by the chamber, but shall not exceed 1.8°F per second and 0.5 inch of mercury per second. The transmitter shall be stabilized at the test temperature before operating. Chamber conditions shall be maintained for the duration of the test, unless otherwise specified. Satisfactory demonstration that the transmitter meets the non-negative g requirements of 3.6.1, 3.6.2 and 3.6.9 in all the following steps, except 1 and 6, shall verify compliance with this specification.

Step 1: At -80°F and site altitude, the test conditions shall be maintained for 2 hours. Visually inspect the transmitter for deterioration without changing the test conditions.

Step 2: At -65°F and site altitude, operate the transmitter at the lowest specified input voltage. The transmitter shall be de-energized and the temperature restabilized at -65°F. The operational sequence shall be repeated two times.

Step 3: At -65°F, adjust the chamber pressure to simulate 70,000 feet of altitude and energize the transmitter at the highest specified input voltage.

Step 4: At 14°F and site altitude, the chamber door shall be opened and frost shall be permitted to form on the transmitter. The relative humidity shall be such to allow the formation of frost. When the frost has melted, but before it evaporates, the chamber door shall be closed and the transmitter shall be operated at the highest specified input voltage. The operational sequence shall be repeated two times.

Step 5: At ambient conditions, operational and performance checks shall be performed on the transmitter.

Step 6: At 230°F and site altitude, test conditions shall be maintained for 16 hours. The transmitter shall be visually inspected for deterioration without change in the test conditions.

Step 7: At 160°F and site altitude, the transmitter shall be energized at the highest specified input voltage for 4 hours.

Step 8: At 203°F and site altitude, the transmitter shall be operated at the highest specified input voltage for four time periods of 30 minutes each. After the first three time periods, the transmitter shall be de-energized for 15 minutes.

Step 9: At 97°F, the chamber pressure shall be adjusted to simulate 50,000 feet of altitude and the transmitter shall be operated at the highest specified input voltage for 4 hours.

Step 10: At 50°F, the chamber pressure shall be adjusted to simulate 70,000 feet of altitude and the transmitter shall be operated at the highest specified input voltage for four hours.

Step 11: At 95°F, the chamber pressure shall be adjusted to simulate 70,000 feet of altitude and the transmitter shall be operated at the highest specified input voltage for four time periods of 30 minutes each. The first three time periods shall be followed by 15 minutes with the transmitter de-energized.

Step 12: Repeat step 5.

4.6.14.4 Temperature-shock. The transmitter shall be stabilized at standard ambient conditions, and then the temperature of the transmitter shall be reduced to -80°F and held for 1 hour. The transmitter then shall be transferred to the high temperature chamber where the temperature of the transmitter shall be increased to 185°F and held again for 1 hour. After the high temperature chamber, the transmitter shall be returned to the low temperature chamber and held for 1 hour after the transmitter reaches -80°F. Repeat this cycle two times. All transfers shall be completed

Downloaded from http://www.everyspec.com

within 5 minutes. After the completion of this test, the transmitter temperature shall be stabilized at ambient temperatures for 1 hour and then subjected to tests 4.6.1 through 4.6.6.

4.6.14.5 Humidity. Using a different test specimen from that used for the salt fog or fungus tests, the transmitter shall be subjected to the cyclic humidity test for 45 days. Each cycle shall conform to Table VI. Every 5 days and at the conclusion of this test, the transmitter shall be subjected to tests 4.6.1 through 4.6.6. Swelling of materials and binding of moving parts as well as oxidation, corrosion, or degradation of mechanical and electrical components shall constitute a cause for rejection.

TABLE VI. Humidity test

Time	Temperature(°F)	Relative humidity (%)	Time	Temperature(°F)	Relative Humidity (%)
0000	80	100	1200	94	75
0100	80	100	1300	94	74
0200	79	100	1400	95	74
0300	79	100	1500	95	74
0400	79	100	1600	93	76
0500	78	100	1700	92	79
0600	78	100	1800	90	82
0700	81	94	1900	88	81
0800	84	88	2000	85	91
0900	87	82	2100	83	95
1000	89	79	2200	82	96
1100	92	77	2300	81	100

4.6.14.6 Fungus. A fungus test should be conducted before the salt fog or the sand and dust tests. The fungus test shall be conducted for 28 days to determine the existence or effect of fungal growth. The transmitter shall be configured as it would be during normal use. The test temperature shall be between 75° to 88°F ± 1°F. The relative humidity shall be 95% ± 5%. At least five different species of fungus shall be used. Additional fungi may be used based on prior knowledge of specific material deterioration characteristics. Any trace of fungus, degradation, corrosion, or mechanical failure constitutes cause for rejection.

4.6.14.7 Salt fog. A salt fog test shall be performed in accordance with ASTM B117. Any trace of corrosion or corrosion damage constitutes cause for rejection.

4.6.14.8 Sand and dust test. A dust test shall be conducted at the normal operating temperature of the transmitter for six hours at a maximum relative humidity of 30 percent. The dust velocity shall be between 3,540 to 5,700 ft/min at a concentration of 0.3 ± 0.2 g/ft^3. The test dust shall consist of silica flour containing 97 to 99 % by weight silicon dioxide (SiO2) with a size distribution of:

100% shall pass through a 100 mesh screen
98 ± 2% shall pass through a 140 mesh screen
90 ± 2% shall pass through a 200 mesh screen
75 ± 2% shall pass through a 325 mesh screen

A sand test shall be conducted at the normal operating temperature of the transmitter for 90 minutes per face at a maximum relative humidity of 30 percent. The sand velocity shall be between 3,540 to 5,700 ft/min at a concentration of 0.0623 ± 0.015 g/ft^3. The test sand shall consist of silica sand containing at least 95% by weight silicon dioxide (SiO2) with a size distribution specified below. The sand shall be of sub angular structure with a mean Krumbein number equal to 0.2 and a hardness factor of 7 mohs. After concluding this test, the transmitter

Downloaded from http://www.everyspec.com

shall pass the test specified in 4.6.2. Any trace of fouling of moving parts, forming of electrically conductive bridges, and malfunctioning of equipment constitutes a cause for rejection.

1.0 ± 0.5% shall be retained by a 20 mesh screen
1.7 ± 0.5% shall be retained by a 30 mesh screen
14.8 ± 1% shall be retained by a 40 mesh screen
37.0 ± 1% shall be retained by a 50 mesh screen
28.6 ± 1% shall be retained by a 70 mesh screen
12.7 ± 1% shall be retained by a 100 mesh screen
5.2 ± 1% shall pass through a 100 mesh screen

4.6.14.9 Vibration test. The power spectral density shall be 0.15 g^2/Hz from 300 to 1,000 Hz with the transmitter configured to simulate normal transportation. The power spectral density then shall be decreased at a rate of -9 dB per octave to 2,000 Hz with the transmitter configured to simulate actual aircraft installation. The time of testing shall be 15 minutes per axis and the transmitter shall not be operated during the test. The transmitter shall pass 4.6.1 through 4.6.6.

4.6.14.10 Rain test. The transmitter shall be subjected to the rain test for 30 minutes at a rainfall 5 inches per hour and a velocity 40 mph. The water droplet size shall be between 0.02 and 0.18 inch in diameter. All surfaces onto which the rain could fall or be driven shall be exposed to the test conditions. After the conclusion of this test, the transmitter shall pass the test specified in 4.6.2.

4.6.15 Acceleration test. The transmitter shall be mounted in its normal operating position with power off. The transmitter shall be subjected to 10g acceleration for 1 minute along its vertical axis and then along each of two axes that are perpendicular to the vertical axis and to each other. No damage to the transmitter shall result from this test. At the conclusion of this test, the transmitter shall be subjected to tests 4.6.1 through 4.6.6.

4.6.16 Sealing thermal shock test. The transmitter shall be immersed alternately in tap water at 185° ± 9°F and 41° ± 7°F for a total of 8 cycles. The length for each immersion shall be 30 minutes with no more than 5 seconds elapsing between immersions. The transmitter then shall be tested in accordance with 4.6.2.4.6.17

4.6.17 Power. Proof of compliance with MIL-STD-704 shall be provided.

4.6.18 Reliability. A minimum MTBF of 10,000 hours shall be demonstrated by satisfactory completion of an industrially accepted reliability test indicating the MTBF shall be realized with a confidence level of 90 percent and a discrimination ratio of 2.

5 PACKAGING

5.1 Packaging. For acquisition purposes, the packaging requirements shall be as specified in the contract or order (see 6.2). When packaging of materiel is to be performed by DoD personnel, these personnel need to contact the responsible packaging activity to ascertain requisite packaging requirements. Packaging requirements are maintained by the Inventory Control Point packaging activity within the Military Department or Defense Agency, or within the Military Department's System Command. Packaging data retrieval is available from the managing Military Department or Defense Agency automated packaging files, CD-ROM products, or by contacting the responsible packaging activity.

6 NOTES

(This section contains information of a general or explanatory nature that may be helpful, but is not mandatory.)

6.1 Intended use. The axial accelerometer transmitters covered by this specification are intended for use on aircraft in conjunction with an MXU-553/A or similar Flight Data Recorder System.

Downloaded from http://www.everyspec.com

6.2 Acquisition requirements. Acquisition documents should specify the following:

a. Title, number, and date of this specification.
b. Type (or types) of transmitter required (see 1.2).
c. Issue of ASSIST to be cited in the solicitation, and if required, the specific issue of individual documents referenced (see 2.1).
d. When first article is required (see 3.1).
e. When reliability testing is required (see 3.6.4).
f. Data required (see section 4).
g. Packaging requirements (see 5.1).
h. Item identification.

6.3 Orientation. Normal orientation is when the sensing element is oriented so that the positive direction of the acceleration is from the aircraft center of gravity to the top of the aircraft fuselage (vertical). Transverse orientation is when the sensing element is oriented so that the positive direction of the acceleration is from the aircraft center of gravity to the right wing (horizontal).

6.4 Subject term (key word) listing.

TRU-106

TRU-107

6.5 Changes from previous issue. Marginal notations are not used in this revision to identify changes with respect to the previous issue due to the extent of the changes.

Downloaded from http://www.everyspec.com

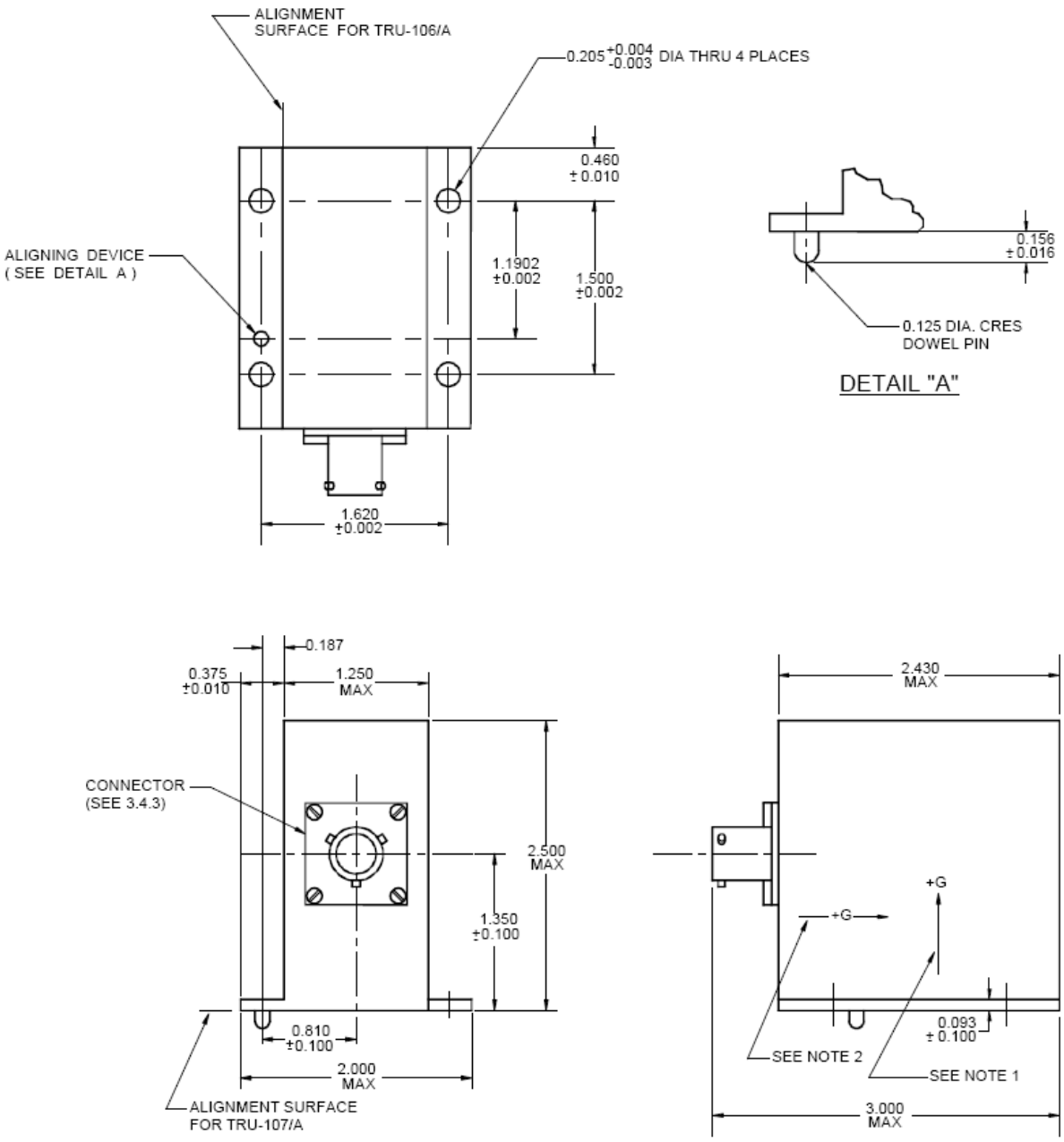

NOTES: 1. SENSITIVE AXIS FOR TRU-106/A
2. SENSITIVE AXIS FOR TRU-107/A

FIGURE 1. Transmitter, Accelerometer, Axial

Downloaded from http://www.everyspec.com

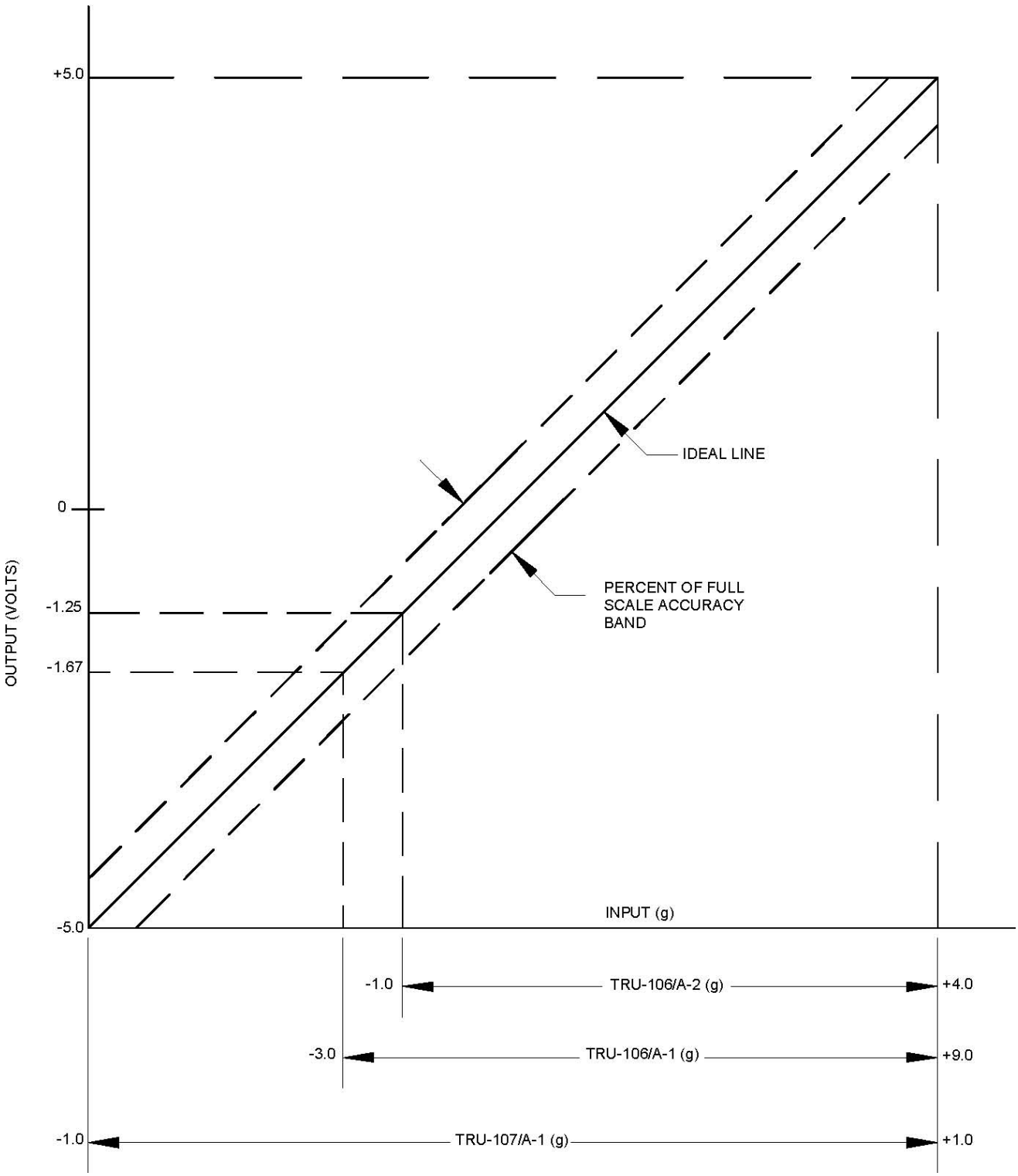

FIGURE 2. Calibration and accuracy curves

Downloaded from http://www.everyspec.com

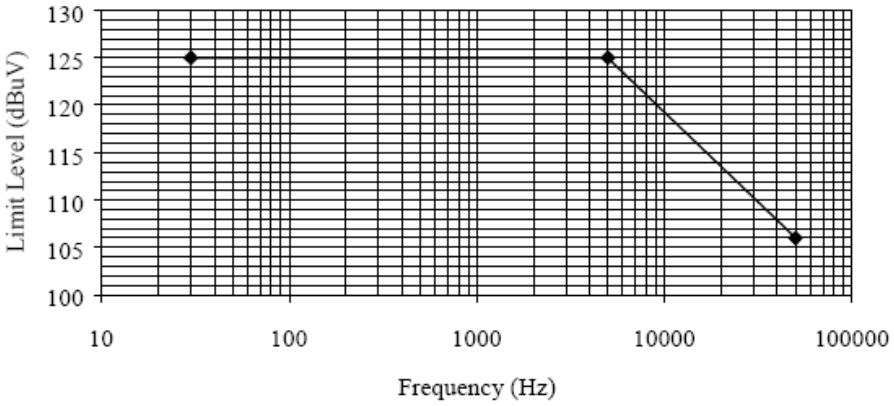

FIGURE 3. CS101 limit

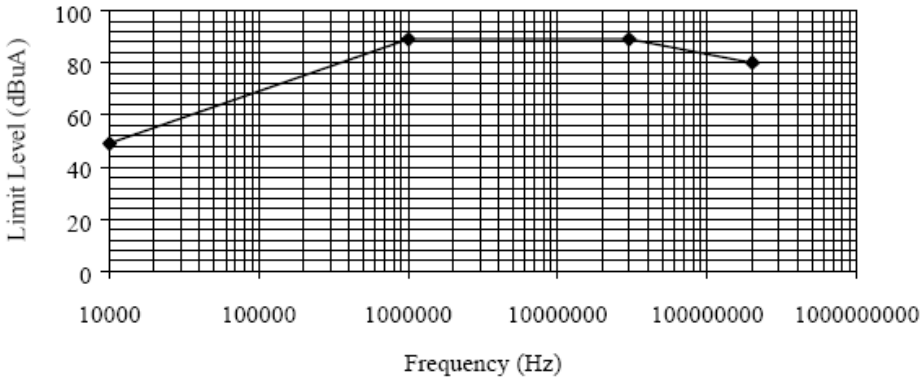

FIGURE 4. CS114 limit

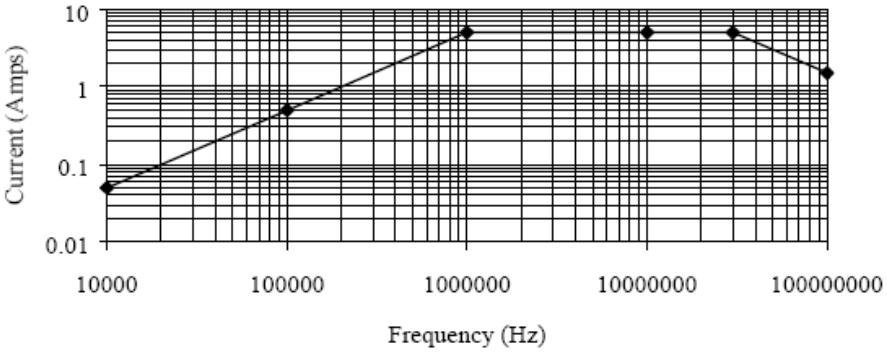

FIGURE 5. CS116 limit

Downloaded from http://www.everyspec.com

Custodian:
Air Force-71

Preparing activity:
Air Force - 71

Reviewing activity:
Air Force - 99

(Project 6610-2007-002)

NOTE: The activities listed above were interested in this document as of the date of this document. Since organizations and responsibilities can change, you should verify the currency of the information above using the ASSIST Online database at http://assist.daps.dla.mil.