INCH-POUND
MIL-PRF-81380D
11 December 2001
SUPERSEDING
MIL-M-81380C(AS)
13 January 1986

PERFORMANCE SPECIFICATION

FILTER/MONITOR, CONTAMINATION, AVIATION FUEL DISPENSING SYSTEM

This specification is approved for use by all Departments and Agencies of the Department of Defense.

1. SCOPE

1.1 Scope. This specification covers the performance requirements for aviation fuel contamination filter/monitor elements and housings.

2. APPLICABLE DOCUMENTS

2.1 General. The documents listed in this section are specified in sections 3 and 4 of this specification. This section does not include documents cited in other sections of this specification or recommended for additional information or as examples. While every effort has been made to ensure the completeness of this list, document users are cautioned that they must meet all specified requirements documents cited in sections 3 and 4 of this specification, whether or not they are listed.

2.2 Government documents.

2.2.1 Specifications, standards and handbooks. The following specifications, standards, and handbooks form a part of this document to the extent specified herein. Unless otherwise specified, the issues of these documents are those listed in the issue of the Department of Defense Index of Specifications and Standards (DoDISS) and supplement thereto, cited in the solicitation (see 6.2).

Beneficial comments (recommendations, additions, deletions) and any pertinent data which may be of use in improving this document should be addressed to: Commander, Naval Air Systems Command, AIR-4.4.5, 22229 Elmer Road, Patuxent River MD 20670-1534, by using the Standardization Document Improvement Proposal (DD Form 1426) appearing at the end of this document or by letter.

AMSC N/A FSC 4930

SPECIFICATIONS

DEPARTMENT OF DEFENSE

MIL-DTL-5624	-	Turbine Fuel, Aviation, Grades JP-4, JP-5, and JP-5/JP-8ST.
MIL-PRF-25017	-	Inhibitor, Corrosion/Lubricity Improver, Fuel Soluble (Metric).
MIL-DTL-83133	-	Turbine Fuel, Aviation, Kerosene Types, NATO F-34 (JP-8), NATO F-35, and JP-8+100.
MIL-DTL-85470	-	Inhibitor, Icing, Fuel System, High Flash, NATO Code Number S-1745.

STANDARDS

DEPARTMENT OF DEFENSE

MIL-STD-810	-	Environmental Engineering Considerations and Laboratory Tests.

(Unless otherwise indicated, copies of the above specifications, standards, and handbooks are available from the Standardization Document Order Desk, 700 Robbins Avenue, Building 4D, Philadelphia, PA 19111-5094.)

2.3 Non-Government publications. The following documents form a part of this document to the extent specified herein. Unless otherwise specified, the issues of the documents which are DoD adopted are those listed in the issue of the DoDISS cited in the solicitation. Unless otherwise specified, the issues of documents not listed in the DoDISS are the issues of the documents cited in the solicitation (see 6.2).

AMERICAN SOCIETY FOR QUALITY CONTROL (ASQC)

ASQC-Z1.4	-	Sampling Procedures and Tables for Inspection by Attributes (DoD Adopted)

(Application for copies of ASQC-Z1.4 should be addressed to the American Society for Quality Control, Box 3005, 611 East Wisconsin Avenue, Milwaukee, WI 53201-4606.)

AMERICAN SOCIETY FOR TESTING AND MATERIALS (ASTM)

ASTM-D910	-	Standard Specification for Aviation Gasolines (DoD Adopted)
ASTM-D1331	-	Standard Test Methods for Surface and Interfacial Tension of Solutions of Surface-Active Agents
ASTM-D1655		Standard Specification for Aviation Turbine Fuels(DoD Adopted)
ASTM-D2276	-	Standard Test Method for Particulate Contaminant in Aviation Fuel by Line Sampling (DoD Adopted)
ASTM-D3240	-	Standard Test Method for Undissolved Water in Aviation Turbine Fuels (DoD Adopted)
ASTM-D3948	-	Standard Test Method for Determining Water Separation Characteristics of Aviation Turbine Fuels by Portable Separometer (DoD Adopted)
ASTM-D5006		Standard Test Method for Measurement of Fuel System Icing Inhibitors (Ether Type) in Aviation Fuels (DoD Adopted)

(Application for copies of ASTM publications should be addressed to the American Society for Testing and Materials, 100 Barr Harbor Drive, West Conshohocken, PA 19428-2959.)

AMERICAN SOCIETY OF MECHANICAL ENGINEERS (ASME)

Boiler and Pressure Vessel Code, Section VIII, Division 1

(Application for copies of ASME publications should be addressed to the American Society of Mechanical Engineers, 3 Park Avenue, New York, NY 10016-5990.)

2.4 Order of precedence. In the event of a conflict between the text of this document and the references cited herein, the text of this document takes precedence. Nothing in this document, however, supersedes applicable laws and regulations unless a specific exemption has been obtained.

3. REQUIREMENTS

3.1 Qualification. The fuel monitor elements and housings furnished under this specification shall be products that are authorized by the qualifying activity for listing on the applicable qualified products list (QPL) before contract award (see 4.2 and 6.3).

3.2 Materials. All metal parts in contact with the fuel shall be free of zinc, cadmium, copper and their alloys. Sensing lines on the housing shall not be aluminum. Carbon steel vessels shall be internally coated with a light colored coating which shall not deteriorate upon exposure to fresh or salt water and is compatible with the fuels listed in section 3.2.1.

3.2.1 Compatibility. Materials used in aviation fuel monitors shall not be adversely affected by and shall have no effect on fuels and inhibitors conforming to MIL-DTL-5624, MIL-PRF-25017, MIL-DTL-83133, MIL-DTL-85470, ASTM-D910 and ASTM-D1655. Compatibility with additional fuels and inhibitors shall be specified in the contract if necessary (see 6.2).

3.3 Element configuration and flow rate. The filter/monitor elements shall be as shown on Figure 1. Element length shall be as specified by the contracting activity (see 6.2). Direction of flow shall be from outside to inside of the element. The open end shall be configured so as to effect a positive, non-leaking seal when seated properly in the filter/monitor housing. Each element shall have a minimum flow rate of one gallon per minute (gpm) per inch of nominal length (0.063 liters per second per 2.54 cm). The filter/monitor element shall not include any device that will cause an immediate or sudden stoppage of fuel flow.

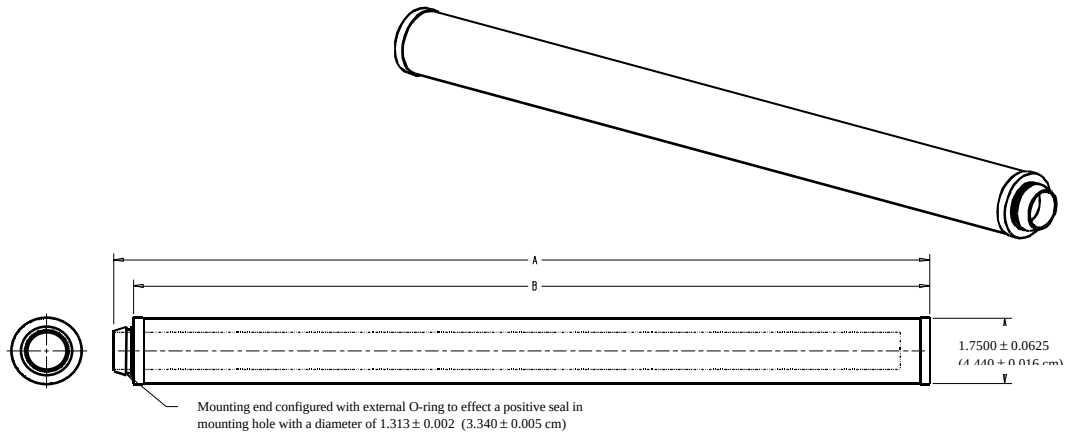

NOMINAL LENGTH	FLOW RATING	A	B
30 (76.2 cm)	30 GPM (114 LPM)	30.8125 ± 0.0625 (78.26 ± 0.16 cm)	30.250 ± 0.0625 (76.64 ± 0.16 cm)
25 (63.5 cm)	25 GPM (95 LPM)	25.8125 ± 0.0625 (55.56 ± 0.16 cm)	25.250 ± 0.0625 (64.14 ± 0.16 cm)
20 (50.8 cm)	20 GPM (76 LPM)	20.8125 ± 0.0625 (52.86 ± 0.16 cm)	20.250 ± 0.0625 (51.44 ± 0.16 cm)
15 (38.1 cm)	15 GPM (57 LPM)	15.8125 ± 0.0625 (40.16 ± 0.16 cm)	15.250 ± 0.0625 (38.74 ± 0.16 cm)
10 (25.4 cm)	10 GPM (38 LPM)	10.8125 ± 0.0625 (27.48 ± 0.16 cm)	10.250 ± 0.0625 (26.04 ± 0.16 cm)
5 (12.7 cm)	5 GPM (19 LPM)	5.8125 ± 0.0625 (14.76 ± 0.16 cm)	5.250 ± 0.0625 (13.34 ± 0.16 cm)

Notes:
1. Unless otherwise specified, dimensions are in inches.
2. All materials shall be compatible with aviation fuels.
3. Direction of flow is outside to inside.

Figure 1. Monitor element.

3.4 Housing.

3.4.1 Housing configuration. The filter/monitor housing shall be configured to hold the required number of elements (see figure 1) to meet the flow rate specified in the contract (see 6.2). Adequate provisions to effect a satisfactory sealing arrangement for each element shall be provided between the inlet and outlet compartments. The interior deckplate shall have the required number of mounting holes for the elements, each hole having a diameter of 1.313 ± 0.002 inches (3.335 cm ± 0.05 mm) and shall comply with 3.5.1. The free ends of all elements, regardless of mounting assembly, shall be supported firmly against vibration. This can be accomplished through the use of an element spider joining elements together and stabilizing the spider against the vessel wall. An electrical bonding device shall be used between the spider and the vessel.

3.4.2 Piping connections. Inlet and outlet connections shall be as specified in the contract (see 6.2) and shall be permanently marked.

3.4.3 Air eliminator. The filter vessel shall be fitted with a means to automatically vent trapped air from the vessel.

3.4.4 Drain valve. The filter/monitor housing shall be equipped with a manual drain valve (or valves) to provide for complete drainage of each compartment.

3.4.5 Pressure gage. A pressure gage shall be provided to measure the pressure drop between the inlet and outlet compartments of the housing (see 6.4.2). The gage shall be a direct reading differential pressure gage.

3.4.6 Pressure rating and relief valve. The filter/monitor housing shall have a design pressure rating equal to or greater than the higher of the following: the maximum working pressure of the fuel system; 150 psig (1034.1 kPa); or as specified in the contract (see 6.2). The vessel shall be designed with a pressure relief valve to ensure that its maximum working pressure is never exceeded. The unit shall be constructed and labeled in accordance with ASME, Boiler and Pressure Vessel Code, Section VIII.

3.4.7 Clean-out connections. All parts of the vessel shall be accessible for inspection and cleaning. Access may be from the main cover, or a specially installed clean-out connection. The clean-out connection itself shall not constitute a water trap. Removal of the vessel's inlet or outlet piping is not an acceptable method.

3.4.8 Element spacing. Touching of elements to each other or the vessel wall shall be avoided. The design layout of elements in the vessel shall provide a minimum clearance of 0.25 in. (6.4 mm) between elements and between the elements and the vessel wall.

3.4.9 Exterior. Prior to shipment, the exterior of the vessel shall be cleaned of all dirt, grease, rust and loose mil scale, and one coat of a metal primer applied, unless otherwise specified in the contract. All markings, gages, etc. shall be masked prior to painting.

3.5 Performance characteristics.

3.5.1 Hydrostatic pressure. The complete filter/monitor housing shall withstand a hydrostatic pressure in compliance with ASME, Boiler and Pressure Vessel Code, Section VIII. The interior deckplate shall withstand a hydrostatic pressure equal to the design pressure, applied to the inlet side with all element mounting holes sealed. Testing shall be in accordance with 4.5.2.1.

3.5.2 Structural integrity. The filter/monitor element shall withstand a three-foot (91.4-cm) drop without structural failure when tested in accordance with 4.5.2.2.

3.5.3 Media migration. When analyzed, the effluent shall contain an average of not more than 10 fibers per liter (see 6.4.3) and the number of fibers in any single sample shall be no greater than 15 fibers per liter when tested in accordance with 4.5.2.2.

3.5.4 Differential pressure. With a new element(s) installed in a filter/monitor housing (single element or full scale), the differential pressure across the element shall be not greater than 8 psi (55.15 kPa) at rated flow (see 3.3) when tested in accordance with 4.5.2.2.

3.5.5 Reaction to solids. The filter/monitor element shall allow a maximum average of 0.26 mg/liter of total solids in the effluent fuel. The average total solids shall consist of the combined tare weights of the individual sample filters [membrane filters used to measure the solids in the effluent stream (see 4.4.1.4)] divided by the total volume of fuel passed through the samplers. No individual sample shall exceed 0.5 mg/liter. Solids content shall be tested in accordance with ASTM-D2276. The time to reach a differential pressure of 75 psi (517.05 kPa) shall be not less than 10 minutes at 100 percent of rated flow when tested in accordance with 4.5.2.3.

3.5.6 Mechanical integrity. The filter/monitor element shall withstand a pressure differential of 175 psi (1206.6 kPa) without collapse when tested in accordance with 4.5.2.3.

3.5.7 Reaction to water. The filter/monitor element's reaction to water shall be as shown in table I when tested in accordance with 4.5.2.4. The minimum running time to 25 psi (172.4 kPa) differential pressure shall be as specified in table I for conditions one and two. When analyzed in accordance with ASTM-D3240, the effluent shall not contain more than 5 ppm of free water.

Table I. Filter/monitor element's reaction to water.

Test Condition	Flow Rate (Percent)	Running Time (minutes)	Free Water Content (by volume)		Total Leakage (Percent of Flow Rate)	Sampling Intervals (minutes)
			Influent	Effluent		
1	100	15 (minimum)	50 ppm	5 ppm (max)	-	2
2	10	100 (minimum)	50 ppm	5 ppm (max)	-	60
3	100	-	1000 ppm (slug)	-	1.5 percent	1
4	100	-	50 percent Water 50 percent FSII (Slug)	-	1.5 percent	1

3.5.8 Reaction to surge. The filter/monitor element shall not pass water in excess of 5 ppm or be otherwise adversely affected by a surge of fuel when tested in accordance with 4.5.2.4.

3.5.9 Reaction to slugs. When triggered by a water slug (condition 3 and 4, table I), the total fluid leakage through the device shall not exceed 1.5 percent of the rated flow to the device, when tested in accordance with 4.5.2.4.2.

3.5.10 Reaction to freezing/thawing. After the element has been frozen and then thawed in accordance with 4.5.2.6, the filter/monitor shall not pass water in excess of 5 ppm.

3.5.11 Performance after extended flow test. Using fuel containing all required additives (see 4.4.3.3), the filter/monitor element shall not pass water in excess of 5 ppm when tested in accordance with 4.5.2.7.

3.5.12 Environmental requirements.

3.5.12.1 High temperature. The fuel filter/monitor housing and elements shall withstand storage without deterioration in temperatures as high as 160°F (71°C) when subjected to the test specified in 4.5.3.1. They shall also permit rated flow in ambient temperatures as high as 125°F (52°C).

3.5.12.2 Low temperature. The fuel filter/monitor housing and elements shall withstand storage without deterioration in temperatures as low as -50°F (-46°C) when subjected to the test specified in 4.5.3.2. They shall also permit rated flow in ambient temperatures as low as -25°F (-32°C).

3.5.12.3 Fuel immersion. The filter/monitor element shall show no evidence of swelling, corrosion, separation of components, dissolving of adhesives, or deformation which could cause failure during operation after being immersed in inhibited fuel conforming to 4.4.3.3, and tested in accordance with 4.5.3.3.

3.5.13 Post-environmental. The filter/monitor housing subjected to the conditions of 3.5.12.1 and 3.5.12.2 shall operate without failure when tested in accordance with 4.5.4. The filter/monitor elements subjected to the conditions of 3.5.12.1 and 3.5.12.2 shall operate without failure when tested in accordance with 4.5.5.

3.6 Marking. The filter/monitor housing shall be marked with the information specified herein. The markings shall not be affected by water, sunlight, aviation fuel, or the temperatures stated in 3.5.12.1 and 3.5.12.2.

a. Name of Unit

b. MIL-PRF-81380D

c. Name and address of manufacturer

d. Manufacturer's model and serial number

e. Inspection block (to be stamped by an inspector)

f. Contract or order number

g. Flow rate and type(s) of fuel

h. Weight, wet/dry

i. Working pressure

j. Test pressure

k. Element model number and number of elements installed

l. Recommended element change differential pressure

3.7 Workmanship. Elements and housings shall be free of burrs and sharp edges. They shall be uniform in quality and shall be free from irregularities or defects that could adversely affect performance or durability.

4. VERIFICATION

4.1 Classification of inspections. The inspection requirements specified herein are classified as follows:

a. Qualification inspection (see 4.2).

b. Conformance inspection (see 4.3).

4.2 Qualification inspection. The primary qualification inspection shall be run using elements with a nominal length of 20 inches (50.8 cm) and shall consist of the examinations and tests listed in table II. For other sizes, five elements of each of the remaining sizes shall be inspected using the examinations listed in table III. Two of the five elements shall then be subjected to the differential pressure test and another two elements shall be subjected to the water reaction test listed in table III. Only those sizes of elements, which have passed qualification inspection, will be listed on the QPL. Qualification inspection for filter/monitor housings shall consist of the examinations and tests shown in table IV.

Table II. Filter/monitor element qualification testing.

Inspection	Requirement Paragraph	Method paragraph
Examination	-	-
Materials	3.2	4.5.1
Element configuration and flow rate	3.3	4.5.1
Workmanship	3.7	4.5.1
Performance, environmental, and post-environmental tests	-	-
Structural integrity, media migration, and differential pressure test	3.5.2, 3.5.3, 3.5.4	4.5.2.2
Solids reaction and mechanical integrity test	3.5.5, 3.5.6	4.5.2.3
Water and surge reaction test	3.5.7, 3.5.8	4.5.2.4
Reaction to slugs test	3.5.9	4.5.2.4
Water immersion test	3.5.9	4.5.2.5
Freezing/thawing test	3.5.10	4.5.2.6
Performance after extended flow test	3.5.11	4.5.2.7
High temperature test	3.5.12.1	4.5.3.1
Low temperature test	3.5.12.2	4.5.3.2
Fuel immersion test	3.5.12.3	4.5.3.3
Post-environmental water reaction test	3.5.13	4.5.5

Table III. Supplemental filter/monitor element qualification testing.

Inspection	Requirement Paragraph	Method Paragraph
Examination	-	-
Materials	3.2	4.5.1
Element configuration and flow rate	3.3	4.5.1
Workmanship	3.7	4.5.1
Performance tests	-	-
Differential pressure portion of the structural integrity, media migration, and differential pressure test	3.5.4	4.5.2.2
Water reaction portion (test condition one of table I only) of the water and surge reaction test	3.5.7	4.5.2.4

Table IV. Qualification inspection for filter/monitor housing.

Inspection	**Requirement Paragraph**	**Method Paragraph**
Examination	-	-
Materials	3.2	4.5.1
Element configuration and flow rate	3.3	4.5.1
Housing configuration	3.4.1	4.5.1
Piping connections	3.4.2	4.5.1
Accessory connections	3.4.3	4.5.1
Drain valve	3.4.4	4.5.1
Pressure gage	3.4.5	4.5.1
Pressure rating	3.4.6	4.5.1
Clean-out connections	3.4.7	4.5.1
Exterior	3.4.9	4.5.1
Element spacing	3.4.8	4.5.1
Marking	3.6	4.5.1
Workmanship	3.7	4.5.1
Environmental and Post-environmental tests	-	-
High temperature test	3.5.12.1	4.5.3.1
Low temperature test	3.5.12.2	4.5.3.2
Post-environmental hydrostatic pressure test	3.5.13	4.5.4

4.2.1 Qualification inspection samples.

a. Filter/monitor element. Qualification samples shall consist of 40 elements with a nominal length of 20 inches (50.8 cm). Five elements each of the other nominal lengths [5, 10, 15, 25, or

30 inches (12.7, 25.4, 38.1, 63.5, or 76.2 cm)] the manufacturer requests to have included on the QPL shall also be submitted for qualification inspection.

b. Filter/monitor housing. The sample shall consist of one complete filter/monitor housing assembly with three complete sets of elements; i.e., three elements each, of nominal length: 5 10, 15, 20, 25, and 30 inches.

4.2.2 Retention of qualification. Retention of qualification for filter/monitor elements on the QPL shall be dependent on periodic verification, by means of test data, of continued compliance with the requirements of this specification. This periodic verification shall be conducted every five years from the date of inclusion on the QPL and will consist of the testing of 40 twenty-inch elements in the same manner as an initial qualification. These qualification retention tests will be performed by the qualifying activity (see section 6.3). Complete requalification shall be required if any change or substitution is made in the materials or manufacturing process of the elements. However, the qualifying activity may grant written waivers for minor changes in materials or processing provided a risk assessment determines the changes will have negligible impact on element or system performance.

4.3 Conformance inspection.

4.3.1 Conformance inspection for elements. Conformance inspection for elements shall consist of the tests shown in table V. These inspections shall be performed on those samples selected from an inspection lot in accordance with ASQC-Z1.4, general inspection level II. An inspection lot shall consist of all elements of the same size produced under the same conditions and offered for inspection at one time.

Table V. Group A conformance inspection for elements.

Inspection	Requirement paragraph	Method
Examination		-
Materials	3.2	visual inspection
Workmanship	3.7	visual inspection

4.3.2 Conformance inspection for filter/monitor housings. Each filter/monitor housing selected shall be subjected to the examinations and tests shown in table VI.

Table VI. Conformance inspection for filter/monitor housings.

Inspection	Requirement Paragraph	Method Paragraph
Examination	-	-
Materials	3.2	4.5.1
Element configuration and flow rate	3.3	4.5.1
Housing configuration	3.4.1	4.5.1
Piping connections	3.4.2	4.5.1
Accessory connections	3.4.3	4.5.1
Drain valve	3.4.4	4.5.1
Pressure gage	3.4.5	4.5.1
Pressure rating	3.4.6	4.5.1
Marking	3.6	4.5.1
Workmanship	3.7	4.5.1
Performance test	-	-
Hydrostatic pressure test	3.5.1	4.5.2.1

4.4 Inspection conditions.

4.4.1 Equipment. Equipment used for testing shall be of laboratory precision type or equivalent insofar as practicable, and shall be calibrated at intervals properly spaced to ensure laboratory accuracy. Figure 2 is a schematic of the test system.

4.4.1.1 Water injection system. A system shall be provided to inject water into the fuel prior to the main pump. The accuracy of the water injection system shall be within five percent of the specified water addition rate.

4.4.1.2 Main circulation pump. The main circulating pump(s) shall be a centrifugal or vane pump capable of emulsifying the fuel and water mixture. A minimum pump speed of 2900 rpm shall be maintained to ensure consistent emulsification.

4.4.1.3 Solids addition system. A continuous solids addition system shall be provided to uniformly feed test dust at a rate of 10 mg/1iter into the fuel upstream of the test unit.

4.4.1.4 Sampling devices. Upstream-facing, probe-type sampling devices shall be provided, one immediately before and one immediately after the test unit, for extracting in-line samples and passing them through membrane filters.

4.4.1.5 Differential pressure reading device. Differential pressure (see 6.4.2) across the test unit shall be measured with an accuracy of two percent of the scale reading of the device used, such as a differential pressure gage, selector valve and gage, etc.

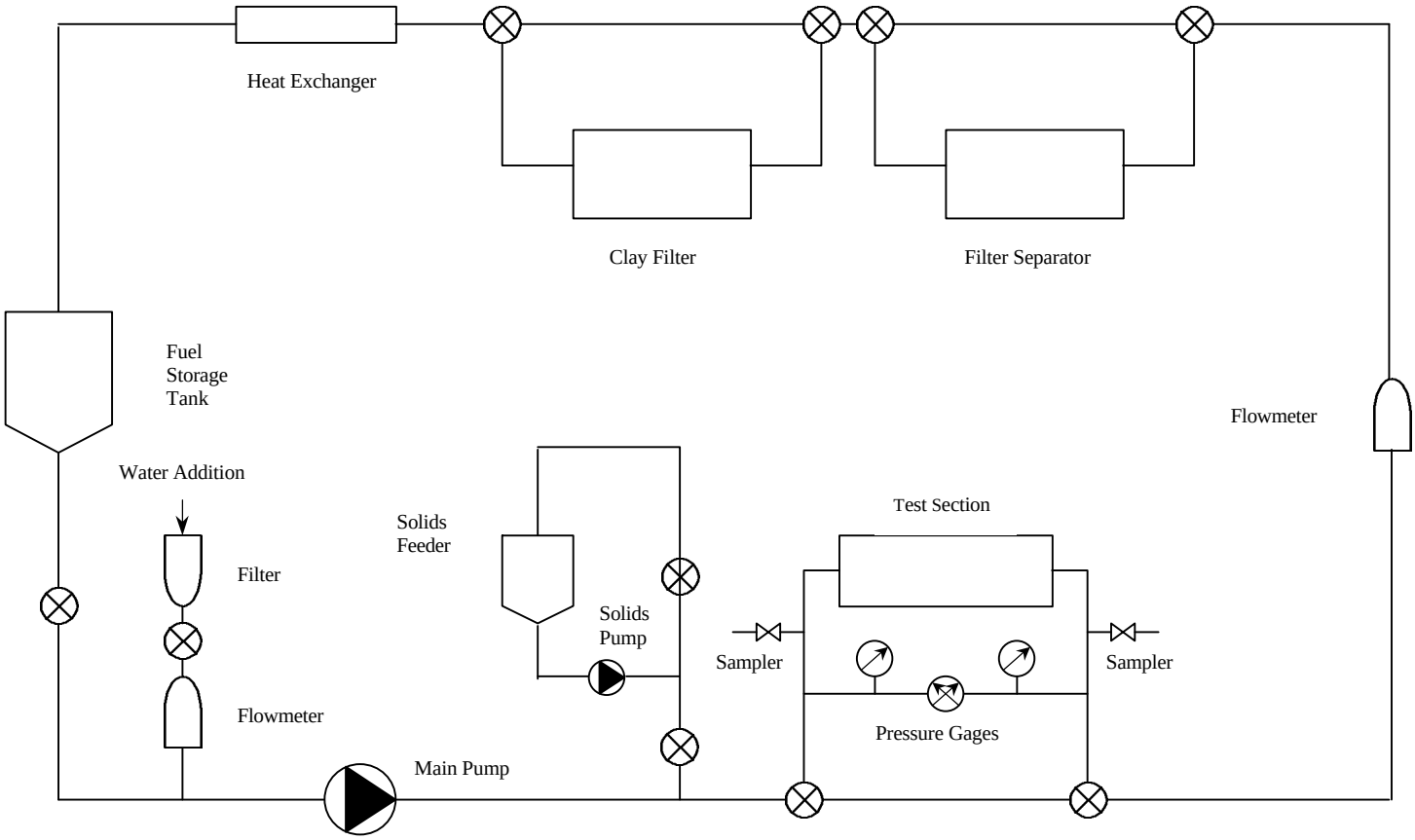

Figure 2. Schematic of test system.

4.4.1.6 Pressure relief valve. An adjustable pressure relief valve shall be installed before the test unit for system protection.

4.4.1.7 Fuel flow meter. A flow meter shall be provided to measure the fuel flow with an accuracy of one percent at the specified fuel flow rate.

4.4.2 Test system pressure. The pressure in the test system shall be not less than 20 psi (137.8 kPa) at the start of all tests when measured at the sampler immediately downstream of the test unit.

4.4.3 Test fluid. Unless otherwise specified, the test fluid shall be aviation fuel, which conforms to MIL-DTL-5624, MIL-DTL-83133 or ASTM-D1655 and contains all of the additives

listed in 4.4.3.3. The fluid shall be clean fuel (see 6.4.1) and shall be tested for full specification conformance.

4.4.3.1 Preliminary testing. Prior to the start of testing, the fuel shall be evaluated for conformance to the applicable specification.

4.4.3.2 Fuel pre-treatment. Before initiating any filter/monitor performance testing the fuel shall be subjected to clay treatment until a Micro-Separometer (MSEP) Surfactants value of 95 or greater is obtained when tested in accordance with ASTM-D3948 and have a Fuel System Icing Inhibitor concentration less than 0.01 percent, when tested in accordance with ASTM-D5006.

4.4.3.3 Required additives and their injection. The Appendix A procedure shall be used to inject the test fuel with the following additives at the specified concentrations:

a. Static Dissipater Additive, Stadis 450® (Octel America, Newark DE) at a concentration of 2.0 mg/liter, ± 0.2 mg/liter.

b. Fuel System Icing Inhibitor in accordance with MIL-DTL-85470 at a concentration of 0.15 percent (by volume), ± 0.01 percent.

c. Corrosion Inhibitor DCI-4A in accordance with MIL-PRF-25017 at a concentration of 15 mg/liter, ± 1 mg/liter.

4.4.3.4 Test fuel volume. Test fuel flow shall be single pass; i.e., non-recirculating for single element tests.

4.4.3.5 Fuel temperature. The test fluid temperatures shall be maintained between 70°F and 90°F (21°C and 32°C) for all tests specified herein, and shall be kept within ±5°F (±3°C) for the duration of the test. .

4.4.4 Test contaminants. The following fresh water and solids shall be used.

4.4.4.1 Fresh water. Fresh water used for testing purposes shall be filtered and contain less than 1.0 mg/liter of solids and shall have a surface tension of not less than 65 dynes per centimeter at 75°F (24°C) when tested in accordance with ASTM-D1331, Method A. The pH value shall be between 6.0 and 8.0.

4.4.4.2 Solids. The solids test mixture shall consist of 10 percent by weight of Copperas Red Iron Oxide, R9998 and 90 percent A1 Ultrafine ISO 1201-1 test dust.

4.5 Inspection methods.

4.5.1 Examination. Each element and housing selected (see 4.3.1 and 4.3.2) shall be examined for conformance to the requirements listed in tables II, III, IV, V, and VI, as applicable. Visual inspections shall be performed before and after all tests to determine conformance with the requirements of paragraphs 3.2, 3.3, 3.4, 3.6, and 3.7.

4.5.2 Performance tests.

4.5.2.1 Hydrostatic pressure test. The hydrostatic pressure specified in 3.5.1 shall be applied to the complete filter/monitor housing without internal components, as prescribed in the ASME Boiler and Pressure Vessel Code, Section VIII, Division 1. The test shall verify the tightness of all joints and the body material. In addition, each compartment shall be tested individually to the design hydrostatic pressure specified in 3.5.1.

4.5.2.2 Structural integrity, media migration, and differential pressure test. Three elements shall be dropped from a distance of three feet above a concrete surface, with each element in a vertical position, open end down. The three feet shall be measured from the concrete surface to the bottom, open end of the element while in a vertical position. Visual inspection shall be performed on the elements to identify cracking of the material or other structural defects (see 3.5.2). The same elements shall then be installed in turn in a single element test facility as shown on Figure 2. Test fluid conforming to 4.4.3.3 shall be pumped through the test unit for a period of 15 minutes, using the flow schedule shown on table VII. Three samples shall be taken from the inlet and three from the outlet samplers. Samples shall be taken immediately after starting at rated flow; during the transition from rated flow to 10 percent of the rated flow; and during the transition back to 100 percent rated flow. A fiber count of the samples for media migration shall be conducted in accordance with Appendix B. The media migration result shall meet the requirement of 3.5.3. In addition, the differential pressure across the element shall be recorded at the start and finish of each phase of table VII. For qualification testing of elements other than the 20-inch size, two elements of each size shall be subjected to the differential pressure portion of the test as specified in 4.5.2.2 (see 4.2). The differential pressures shall meet the requirement of 3.5.4.

Table VII. Flow schedule.

Phase	Elapsed time (minutes)	Flow rate (percent)
1	0 - 5	100
2	5 - 10	10
3	10-15	100

4.5.2.3 Solids reaction and mechanical integrity test. Using the three elements that were tested in 4.5.2.2, each element in turn shall be run in the single element test vessel at 100 percent of rated fuel flow. Contaminant conforming to 4.4.4.2 shall be injected at a rate of 10 mg/liter into the fuel stream. The test dust shall be continuously and uniformly added to the fuel influent stream as close as practicable to the test unit. The test shall be continued until the differential pressure across the element reaches 175 psi (1206.6 kPa), and then held at 175 psi for five minutes. Continuous samples up to a pressure differential of 25 psi shall be taken at the outlet samplers, and analyzed for solids content in accordance with ASTM-D2276. These sampler membrane filters may be replaced, as they become loaded with solid contaminants. The results of solids testing shall meet the requirements of 3.5.5. The differential pressure shall be recorded every five minutes and the results shall meet the requirements of 3.5.6. An alternate method of completing this test, is to remove the element after 25 psi is achieved, and place it in a second system capable of higher pressures.

4.5.2.4 Water, surge, and slug reaction tests.

4.5.2.4.1 Water and surge reaction test. Using a new element for each test, six separate single element tests shall be conducted in accordance with table I (three tests each for condition one and two). Water conforming to 4.4.4.1 shall be injected into the fuel on the inlet side of the main pump at the rates shown for conditions one and two of table I. When the differential pressure reaches 15 psi (103.35 kPa), the fuel flow shall be momentarily stopped and restarted by closing and, within four seconds, opening the downstream valve. The main pump shall be kept running during the cycling of the valves to provide a surge of fuel. The surge of fuel shall be repeated when the differential pressure reaches 20 psi (137.8 kPa). The test shall be continued to a differential pressure of 25 psi (172.25 kPa). Differential pressure shall be recorded every five minutes and when the pressure differential reaches 25 psi. Sampling shall be done at the intervals specified in table I, and analyzed in accordance with ASTM-D3240. Sample results shall meet the requirements of 3.5.7, surge reaction shall meet the requirements of 3.5.8.

NOTE: For qualification testing of elements other than the 20-inch size, two elements of each size shall be subjected to the water reaction portion of the test stated in 4.5.2.4.

4.5.2.4.2 Reaction to slugs. Using a new element for each test, six separate single element tests shall be conducted in accordance with table I (three tests each for condition three and four). The test fuel shall meet the requirements of 4.4.3. Water shall meet the requirements of 4.4.4.1. One new element is installed into the test housing and subjected to condition 3 of table I. The second element shall be installed in the test housing and subject to condition 4 of table I using the following procedure. The test fuel is pumped through the test unit at its rated flow and a 50 percent water/50 percent FSII slug (condition 4, table I) is introduced into the fuel. The minimum slug volume shall be 1 percent of the total flow rate of element rating or equivalent to the water holding capacity of the element(s). The greater volume of the above two scenarios shall be used.

The maximum volume of water used shall be equivalent to the volume of pipe work between the water slug injection point and the test vessel plus the test vessel volume upstream of the elements. This is the volume of water to be used in the 50/50 slug mixture, to this volume, add the same volume of FSII. Stir the mixture well in a container. Caution should be used when mixing, the mixture will become warm. Add this mixutre to the injection system. Following the 50/50 slug introduction, fuel shall back the slug.

Test condition 4 of Table I shall be completed as follows:

1. Circulate inhibited, dry fuel through the test vessel and element at full rated flow.
2. Keeping the pump running, smoothly introduce the 50/50 slug either upstream of the pump using the pump suction, or downstream of the pump by diverting the fuel through a side stream containing the prerequisite volume of water and FSII.

Test conditions 3 and 4 shall be continued until the pump reaches stall pressure. The stall pressure shall be maintained for five minutes and the effluent from the test vessel shall be collected into separated graduated containers. One container for each minute shall be used. The leak rate of the effluent fuel shall meet the requirements of 3.5.9. To accomplish this test, a downstream valve shall be shut off to not allow flow back to the fuel tank. The leak rate sample shall be taken from a probe or sample point on the downstream side of the test housing. The first 5 seconds of leak by flow may be discarded to allow for the depressurizing of the system.

4.5.2.5 Water immersion test. A new element shall be fully immersed in water for a minimum of 10 hours. The inlet shall be plugged to ensure that no water enters the downstream side of the element. It shall then be removed from the water and visually inspected. Any evidence of bulging, rupture or media extrusion shall be noted and reported. It shall then be installed in the test vessel and exposed to at least 75 psi (517.1 kPa) pressure by flowing fuel through the vessel. The effluent fuel shall meet the requirements of 3.5.9.

4.5.2.6 Freezing/thawing test. Two separate tests shall be conducted, using a new element for each test. An element shall be installed in the single element test vessel and test condition one of table I shall be run until a differential pressure of 15 psi (103.4 kPa) is reached. The element shall be removed and placed in a bath of fuel. The temperature of the bath shall be lowered and maintained at a maximum temperature of -25°F (-32°C) for 24 hours. The element shall then be returned to ambient condition, reinstalled in the test vessel and subjected to the remainder of test condition one of table I in accordance with 4.5.2.4. Sample results shall meet the requirements of 3.5.10. Surge reaction shall meet the requirements of 3.5.8.

4.5.2.7 Performance after extended flow test. Three separate single element tests shall be conducted. The fuel shall be circulated through the element at 100 percent rated flow for 24 hours, bypassing all clean-up units. The elements may be installed in a multi–element housing for

the conditioning period. After the 24-hour conditioning period, test condition one of table I shall be conducted in accordance with 4.5.2.4. Sample results shall meet the requirements of 3.5.10. Surge reaction shall meet the requirements of 3.5.8.

4.5.3 Environmental tests. A filter/monitor housing shall be subjected to the tests specified in 4.5.3.1 and 4.5.3.2. The same filter/monitor housing shall be used for both tests. The filter/monitor housing shall then be tested in accordance with 4.5.4. Two new elements shall be subjected to the tests specified in 4.5.3.1, 4.5.3.2, and 4.5.3.3. The same elements shall be used for all three tests. Those elements shall then be tested in accordance with 4.5.5.

4.5.3.1 High temperature test. The filter/monitor housing and elements shall be tested in accordance with MIL-STD-810, Method 501, Procedure I, steps 1, 2, and 3, using a temperature of 160°F (71°C) for 24 hours. The test items shall then be examined for defects (see 3.5.12.1).

4.5.3.2 Low temperature test. The filter/monitor housing and elements shall be tested in accordance with MIL-STD-810, Method 502, Procedure I, steps 1, 2, 3, and 6, using a temperature of -50°F for 24 hours. The test items shall then be examined for defects (see 3.5.12.2).

4.5.3.3 Fuel immersion test. The same two elements shall be immersed in fuel conforming to 4.4.3 for 100 hours at a temperature of 77 ±5°F (25 ±3°C). The elements shall then be removed and examined to determine compliance with 3.5.12.3.

4.5.4 Post-environmental hydrostatic pressure test. After successful completion of the tests specified in 4.5.3.1 and 4.5.3.2, the same filter/monitor housing shall be subjected to the hydrostatic pressure test specified in 4.5.2.1.

4.5.5 Post-environmental water reaction test. After successful completion of the tests specified in 4.5.3, the same two elements shall be installed in turn in the test vessel. A water reaction test shall be conducted in accordance with 4.5.2.4, using test condition one of table I.

5. PACKAGING

5.1 Packaging. For acquisition purposes, the packaging requirements shall be as specified in the contract or order (see 6.2). When actual packaging of materiel is to be performed by DoD personnel, these personnel need to contact the responsible packaging activity to ascertain requisite packaging requirements. Packaging requirements are maintained by the Inventory Control Point's packaging activity within the Military Department or Defense Agency, or within the Military Department's System Command. Packaging data retrieval is available from the managing Military Department's or Defense Agency's automated packaging files, CD-ROM products, or by contacting the responsible packaging activity.

6. Notes This section contains information of a general or explanatory nature that may be helpful, but is not mandatory.

6.1 Intended use. This fuel contamination filter/monitor exceeds commercially available filter/monitors in order to ensure compatibility with military fuel additives and fuel system icing inhibitors which are not used in commercial applications..

6.2 Acquisition requirements. Acquisition documents must specify the following:

a. Title, number, and date of this specification.

b. Issue of DoDISS to be cited in the solicitation, and if required, the specific issue of individual documents referenced (see 2.1).

c. Whether materials are to be compatible with additional fuels and inhibitors (3.2.1).

d. Element length (3.3).

e. Flow rate for filter/monitor housing (3.4.1).

f. Type and size of inlet and outlet connections for filter/monitor housing (3.4.2).

g. Accessory connections for filter/monitor housing (3.4.3).

h. Design pressure rating for filter/monitor housing (3.4.6).

i. Packaging requirements (see 5.1).

6.3 Qualification. With respect to products requiring qualification, awards will be made only for products which are, at the time of award of contract, qualified for inclusion in Qualified Products List QPL-81380, whether or not such products have actually been so listed by that date. The attention of the contractors is called to these requirements. Manufacturers are urged to arrange to have the products they propose to offer to the Federal Government tested for qualification in order that they may be eligible to be awarded contract or purchase orders for the products covered by this specification. Information pertaining to qualification of products may be obtained from the Naval Air Systems Command, Fuels and Lubricants Division, Building 2360, 22229 Elmer Road, Patuxent River, MD 20670-1534.

6.4 Definitions.

6.4.1 Clean fuel. Clean fuel (test fluid) is defined as fuel containing less than 0.26 mg/liter of solids contamination and less than 5 ppm free water.

6.4.2 Differential pressure. The differential pressure across the aviation fuel contamination filter/monitor is defined as the pressure drop measured from the fuel inlet connection to the fuel outlet connection.

6.4.3 Fiber. A fiber is defined as any particle with a length-to-diameter ratio of 10 or greater and a minimum length of 100 microns.

6.5 Subject term (key word) listing.

Aircraft
Gasoline
Impurity
Sensor

6.6 Changes from previous issue. Marginal notations are not used in this revision to identify changes with respect to the previous issue due to the extent of the changes.

6.7 Test fuel specification conformance. A manufacturer's data sheet may be included, proving the test fuel conforms to its applicable specification.

Custodians:
Army - AV
Navy - AS
Air Force - 11
DLA - CC

Review activities:
Army - AT, MI
Navy - MC, YD
Air Force - 68, 99

Preparing activity:
Navy - AS

(Project 4930-0066)

APPENDIX B

METHOD FOR INJECTING FUEL ADDITIVES TO THE TEST FLUID

A.1 SCOPE

A.1.1 Scope. This Appendix details the method to be used for injecting the test fluid with the required additives. This Appendix is a mandatory part of the specification. The information contained herein is intended for compliance.

A.2 APPLICABLE DOCUMENTS

(This section is not applicable to this Appendix.)

A.3 PROCEDURE

A.3.1 Test fuel cleanup. The test fluid shall be filtered until an AquaGlo reading of 5 or less is obtained when tested in accordance with ASTM-D3240. The test fluid shall than be clay filtered until a Micro-Separometer (MSEP) Surfactants value of 95 or greater is obtained when tested in accordance with ASTM-D3948. All filtration equipment shall be bypassed before adding the additives.

A.3.2 Inhibitor injection. The test fuel shall be inhibited according to the amounts specified in section 4.4.3.3. To determine the duration of recirculation needed to achieve a homogenous mixture of fuel and inhibitors, the following procedure shall be used. Inject additive A upstream of the main pump. The conductivity shall be measured at 5 minute intervals after the additive is introduced to the fuel. The elapsed time from the initial addition of the additive to the time where three successive conductivity measurements at 5-minute intervals are with $\pm$ 20 pS/m shall be noted as the mixing time. Additive B shall then be added in the same manner allowing the same mixing time between B and C. Additive C shall then be added in the same manner allowing the same mixing time before beginning the test.

A.4 CAUTION

A.4.1 Handling of inhibitors. Refer to manufacturer's safety data sheets for precautions to be taken while handling fuel inhibitors.

APPENDIX B

FIBER DETERMINATION METHOD (MEDIA MIGRATION)

B.1 SCOPE

B.1.1 Scope. This Appendix details the method to be used for determining the number of fibers present in a 1000 milliliter (ml) sample of test fuel. The number of fibers present needs to be known in order to determine if a test item is functioning in accordance with this specification. This Appendix is a mandatory part of the specification. The information contained herein is intended for compliance.

B.2 APPLICABLE DOCUMENTS

(This section is not applicable to this Appendix.)

B.3 EQUIPMENT

B.3.1 Required equipment. The following equipment is required:

a. Millipore Fluid Sample Kit, Cat. No. XX64 037 00 or equal

b. Millipore Field Monitors, Particle Size Analysis, Cat. No. MAWG037P0 or equal

c. Vacuum pump

d. Oven for obtaining 90°C

e. Calibrated microscope capable of examining fibers

B.4 PROCEDURE

B.4.1 Sampling. A 1000 ml sample shall be withdrawn through a pre-counted monitor (see B.4.1.1) in accordance with fluid sampling kit operating instructions. Sample shall be taken at the sampling site immediately after the solid feeder pump and shall be called the upstream monitor sample. Another 1000 ml sample shall be withdrawn through a pre-counted monitor at the sampling site immediately after the test vessel. This sample shall be called the downstream monitor sample (see figure 2).

B.4.1.1 Monitor pre-count. A pre-count shall be taken from the monitor to obtain a background fiber count blank. The background fiber count blank shall be subtracted from each monitor used. If Millipore monitors are used, average background counts are indicated on each carton of

assembled Contamination Analysis Monitors. The average background fiber count can be used as a substitute for pre-counting.

B.4.2 Monitor pad evaluation. Excess fuel shall be removed from monitors with a vacuum pump. Monitors shall then be dried intact in an oven for one hour (avoid heat above 90°C) with the inlet/outlet plugs removed. The monitors shall then be cooled. The fibers on each monitor filter pad shall be counted with a calibrated microscope capable of examining fibers. The upstream monitor sample shall then be subtracted from the downstream monitor sample to obtain a net fiber count.

STANDARDIZATION DOCUMENT IMPROVEMENT PROPOSAL

INSTRUCTIONS

1. The preparing activity must complete blocks 1, 2, 3, and 8. In block 1, both the document number and revision letter should be given.

2. The submitter of this form must complete blocks 4, 5, 6, and 7, and send to preparing activity.

3. The preparing activity must provide a reply within 30 days from receipt of the form.

NOTE: This form may not be used to request copies of documents, nor to request waivers, or clarification of requirements on current contracts. Comments submitted on this form do not constitute or imply authorization to waive any portion of the referenced document(s) or to amend contractual requirements.

I RECOMMEND A CHANGE:	1. DOCUMENT NUMBER MIL-PRF-81380D	2. DOCUMENT DATE (*YYYYMMDD*) 11 December 2001

3. DOCUMENT TITLE
FILTER/MONITOR CONTAMINATION, AVIATION FUEL DISPENSING SYSTEM

4. NATURE OF CHANGE (*Identify paragraph number and include proposed rewrite, if possible. Attach extra sheets as needed.*)

5. REASON FOR RECOMMENDATION

6. SUBMITTER

a. NAME (*Last, First, Middle Initial*)	b. ORGANIZATION	
c. ADDRESS (*Include ZIP Code*)	d. TELEPHONE (*Include Area Code*) (1) Commercial (2) DSN (*If applicable*)	**7. DATE SUBMITTED** (*YYYYMMDD*)

8. PREPARING ACTIVITY

a. NAME COMMANDER NAVAL AIR WARFARE CENTER AIRCRAFT DIVISION	b. TELEPHONE (*Include Area Code*) (1) Commercial (732) 323-2947 (2) DSN 624-2947
c. ADDRESS (*Include ZIP Code*) CODE 414100B120-3 HIGHWAY 547 LAKEHURST, NJ 08733-5100	**IF YOU DO NOT RECEIVE A REPLY WITHIN 45 DAYS, CONTACT:** Defense Standardization Program Office (DLSC-LM) 8725 John J. Kingman Road, Suite 2533 Fort Belvoir, Virginia 22060-6221 Telephone (703) 767-6888 DSN 427-6888