Downloaded from http://www.everyspec.com

INCH-POUND

MIL-PRF-64266/17
9 September 2010

PERFORMANCE SPECIFICATION SHEET

CONNECTORS, FIBER OPTIC, CIRCULAR, RECEPTACLE STYLE,
MULTIPLE REMOVABLE TERMINI, DUMMY STOWAGE, SCREW THREADS,
ENVIRONMENT RESISTING

This specification is approved for use by all Departments and Agencies of the Department of Defense.

The requirements for acquiring fiber optic connectors described herein shall consist of this specification sheet and MIL-PRF-64266.

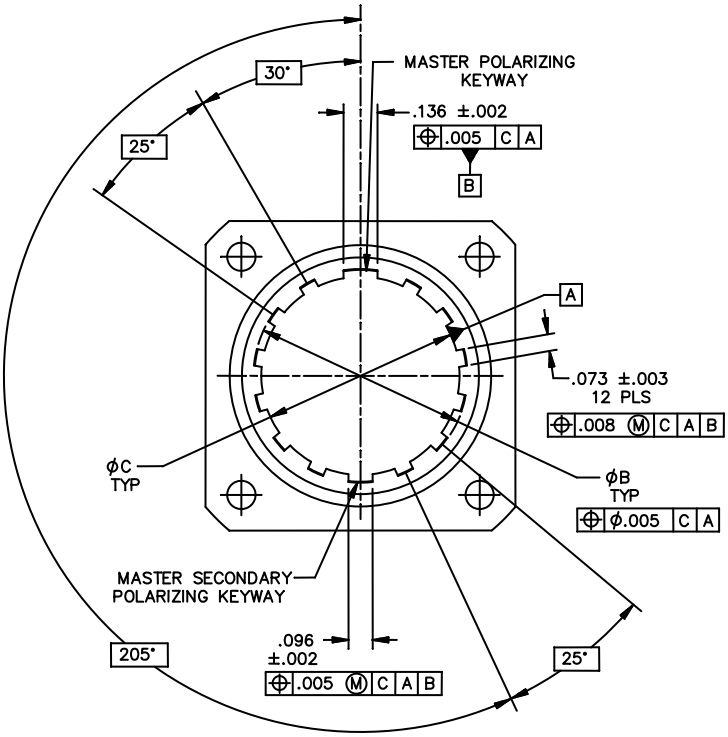


FIGURE 1. Dummy stowage receptacle.

Downloaded from http://www.everyspec.com



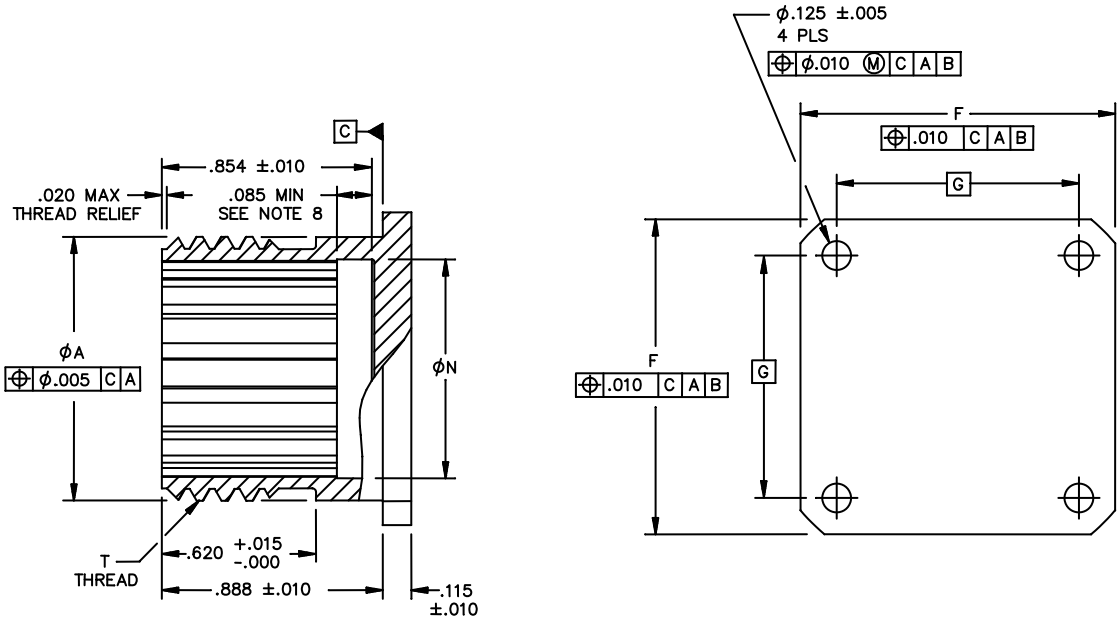


| Shell size | T thread Class 2A | A diameter maximum | | B diameter ±.004 | |
|---|---|---|---|---|---|
| | | Inches | mm | Inches | mm |
| 11 | .750-.1P-.2L-D.S. | .750 | 19.05 | .575 | 14.61 |
| 13 | .875-.1P-.2L-D.S. | .875 | 22.26 | .699 | 17.76 |
| 15 | 1.062-.1P-.2L-D.S. | 1.062 | 28.55 | .871 | 22.12 |
| 23 | 1.500-.1P-.2L-D.S. | 1.500 | 38.10 | 1.294 | 32.87 |

| Shell size | F | | G | | N diameter minimum | |
|---|---|---|---|---|---|---|
| | Inches | mm | Inches | mm | Inches | mm |
| 11 | 1.023 | 25.98 | .750 | 19.05 | .585 | 14.86 |
| 13 | 1.138 | 28.91 | .843 | 21.41 | .709 | 18.01 |
| 15 | 1.258 | 31.95 | .968 | 24.59 | .881 | 22.38 |
| 23 | 1.718 | 43.64 | 1.281 | 32.54 | 1.304 | 33.12 |

NOTES:
1. Dimensions are in inches.
2. Metric equivalents are given for general information only.
3. Dimensions apply to plated/finished part.
4. The connector interface dimensions shall be in accordance with figure A-2 of MIL-PRF-64266.
5. Mating key positions and dimensions are shown on figure A-3 of MIL-PRF-64266. For this dummy stowage receptacle, all 12 keying arrangements along with the master primary polarizing keyway (in the 12 o'clock position) and the master secondary polarizing keyway (in the 6 o'clock position) shall be provided. This keying arrangement ensures that cabling attached to a mating plug will not twist while mating to the dummy storage receptacle. Dummy stowage receptacle shall allow mating with a plug conforming to MIL-PRF-64266/2 containing any keying position (accommodate all 12 polarization positions within its shell size).

FIGURE 1. Dummy stowage receptacle - Continued.

Downloaded from http://www.everyspec.com



6. This design information establishes connector inter-mating criteria.
7. Dummy stowage receptacle is used when unmated plugs must be protected.
8. A conductive resilient member which will accommodate contact of connector plug shell and deflect down to .040 inch (1.02 mm) is specified as the standardized means to ensure shell to shell conductivity.

FIGURE 1. Dummy stowage receptacle - Continued.

REQUIREMENTS:

Temperature ranges:

| | |
|---|---|
| Operating: | -67°F to 329°F (-55°C to 165°C) |
| Non-operating: | -40°F to 185°F (-40°C to 85°C) |
| Storage: | -40°F to 185°F (-40°C to 85°C) |

Dimensions and configurations: See figure 1 herein and MIL-PRF-64266, figure A-2.

Weight: Weight shall not exceed the specified value in table I for the applicable shell size.

TABLE I. Dummy stowage receptacle weights.

| Shell size | Composite | | Aluminum | | Stainless steel | |
|---|---|---|---|---|---|---|
| | ounces | grams | ounces | grams | ounces | grams |
| 11 | 0.28 | 8.0 | 0.49 | 14.0 | 1.41 | 40.0 |
| 13 | 0.35 | 10.0 | 0.60 | 17.0 | 1.76 | 50.0 |
| 15 | 0.49 | 14.0 | 0.78 | 22.0 | 2.29 | 65.0 |
| 23 | 0.78 | 22.0 | 1.41 | 40.0 | 4.06 | 115.0 |

Flange: Flange on dummy stowage receptacle is solid (no penetrations or openings except the four flange mounting holes). There shall be no protrusion in the back of the flange (so as to permit mounting to a flush surface).

Gasket: Groove in back of flange to mechanically captivate a gasket/o-ring is not applicable.

Dust cover: When specified as part of the PIN, the dummy stowage receptacle shall be provided with a dust cover in accordance with MIL-PRF-64266/11.

Qualification: Qualification shall consist of size, weight, identification markings, workmanship, screw threads, shell-to-shell conductivity, salt spray, modified $SO_2$/salt spray, thermal shock (composite material only), temperature life (composite material only), connector coupling engagement and disengagement torque. Testing shall be performed on a minimum of two dummy stowage receptacles.

Qualification by similarity: Vendors that are qualified to MIL-PRF-64266/1 wall mounted receptacle and meet the size, weight, identification markings, and connector coupling engagement and disengagement torque are qualified to this specification sheet. This qualification by similarity is granted under the constraint that the same materials and processes are used to produce the product to this specification sheet as are used for MIL-PRF-64266/1. Testing shall be performed on a minimum of two dummy stowage receptacles.

Downloaded from http://www.everyspec.com



Cleaning procedures: Each shipment of connectors shall include recommended cleaning procedures. The following wording or equivalent is recommended "To clean, use lint free wipe dampened with alcohol and blow dry with air."

Marking:

Part or Identification Number (PIN): Mark on flange of dust cover.

M64266/17 X X X X

M prefix

General specification number and specification sheet

Shell size code designator
See table IV

Class (material designator
A = Aluminum with cadmium electrolytic compatible plating
B = Composite with cadmium electrolytic compatible plating
C = Stainless steel, passivated

Dust cover designator letter
Y = Yes, dummy receptacle provided with a dust cover
N = No, dummy receptacle not provided with a dust cover

PIN example: M64266/17BAY

TABLE IV. PIN shell size code designator.

| Shell size | Shell size code |
|---|---|
| 11 | B |
| 13 | C |
| 15 | D |
| 17 | E |
| 19 | F |
| 21 | G |
| 23 | H |
| 25 | J |

Referenced documents: In addition to MIL-PRF-64266, this specification sheet references the following documents:

MIL-PRF-64266
MIL-PRF-64266/1
MIL-PRF-64266/2
MIL-PRF-64266/11

Downloaded from http://www.everyspec.com



Custodians:
Army - CR
Navy - AS
Air Force - 85
DLA - CC

Review activities:
Army - TE
Navy - SH
Air Force - 13, 19, 93, 99
MISC – DI
MISC - MDA

Civil agencies:
GSA – FAS
NASA - NA

Preparing activity:
DLA - CC

(Project 6060-2009-009)

NOTE: The activities listed above were interested in this document on the date of this document. Since organizations and responsibilities can change, you should verify the currency of the information above using the ASSIST Online database at https://assist.daps.dla.mil.