Downloaded from http://www.everyspec.com

INCH-POUND
MIL-PRF-55629E
10 June 2011
SUPERSEDING
MIL-PRF-55629D
08 February 2008

PERFORMANCE SPECIFICATION

CIRCUIT BREAKERS, MAGNETIC, UNSEALED OR PANEL SEAL,TRIP-FREE, GENERAL SPECIFICATION FOR

This specification is approved for use by all Departments and Agencies of the Department of Defense.

1. SCOPE

1.1 Scope. This specification covers the requirements and test procedures for single and multipole, trip-free, unsealed, magnetic circuit breakers with current ratings of 0.2 amperes to 100 amperes inclusive, up to and including 240 volts, 400 Hertz, 480 volts, 60 Hertz alternating current (ac) and 125 volts direct current (dc), (see 6.1). These circuit breakers may also include auxiliary contacts (see 6.6.1) for monitoring circuits. A voltage sensitive pole is also available in a four pole device. Panel seal mounts are available in 0.2 amperes through 50 amperes. Designers are WARNED that these circuit breakers may contain a pure tin finish on some of the component parts (see 6.5).

CAUTION: Calibration of these circuit breakers will be affected if mounted in other than the vertical plane.

1.2 Part or Identifying Number (PIN). The following PIN system will be used to preclude changing existing catalog data.

1.2.1 Single or multipole circuit breakers with identical poles (specification sheet 1 through sheet 12). The PIN identifying the individual circuit breaker consists of the letter “M”, the basic number of the specification sheet and a sequentially assigned dash number as follows:

M	55629/6	-001
Designator	Specification sheet number	Dash number (see 3.1)

1.2.2 Circuit breakers with mixed poles (specification sheet 1 through sheet 6) and all circuit breakers covered by (specification sheet 13 through sheet 22). NOTE: Non-delay poles are not available with the “high-inrush” feature but may be mixed with other delays having that feature. The PIN identifying the individual circuit breaker consists of the letter “M”, the basic number of the specification sheet followed by the pole ratings (see 3.1) as follows:

M	55629/6	EAECEC
Designator	Specification sheet number	Pole ratings (see 3.1)

Comments, suggestions, or questions on this document should be addressed to: US Army Communications-Electronics RDEC, ATTN: RDER-PRQ-QE, Fort Monmouth, NJ 07703-5201 or emailed to michael.g.williams31.civ@mail.mil. Since contact information can change, you may want to verify the currency of this address information using the ASSIST Online database at https://assist.daps.dla.mil.

Downloaded from http://www.everyspec.com

2. APPLICABLE DOCUMENTS

2.1 General. The documents listed in this section are specified in sections 3 and 4 of this specification. This section does not include documents cited in other sections of this specification or recommended for additional information or as examples. While every effort has been made to ensure the completeness of this list, document users are cautioned that they must meet all specified requirements documents cited in sections 3 and 4 of this specification, whether or not they are listed.

2.2 Government documents.

2.2.1 Specifications, standards, and handbooks. The following specifications, standards, and handbooks form a part of this document to the extent specified herein. Unless otherwise specified, the issues of these documents are those cited in the solicitation or contract (see 6.2).

FEDERAL STANDARDS

FED-STD-H28 - Screw-Thread Standards for Federal Services.

DEPARTMENT OF DEFENSE SPECIFICATIONS

(See supplement 1 for list of associated specification sheets).

DEPARTMENT OF DEFENSE STANDARDS

MIL-STD-202 - Test Methods For Electronic and Electrical Component Parts.
MIL-STD-704 - Aircraft Electric Power Characteristics.
MIL-STD-1285 - Marking of Electrical and Electronic Parts.

(Copies of these documents are available online at https://assist.daps.dla.mil/quicksearch/ or from the Standardization Document Order Desk, 700 Robbins Avenue, Building 4D, Philadelphia, PA 19111-5094.)

2.3 Non-Government publications. The following documents form a part of this document to the extent specified herein. Unless otherwise specified, the issues of these documents are those cited in the solicitation or contract (see 6.2).

AMERICAN NATIONAL STANDARDS INSTITUTE (ANSI)

NCSL Z540.3 - Requirements for Calibration of Measuring and Test Equipment.

(Copies of this document are available from http://www.ncsli.org/ or from the National Conference of Standards Laboratories (NCSL) International, 1800 30th Street, Suite 305, Boulder, CO 80301-1026).

INSTITUTE OF ELECTRICAL AND ELECTRONICS ENGINEERS (IEEE)

IEEE STD 315 - Graphic Symbols for Electrical and Electronics Diagrams.

(Copies of these documents are available online at www.ieee.org or from the IEEE Operations Center, 445 Hoes Lane, P. O. Box 1331, Piscataway, NJ 08854-1331.)

INTERNATIONAL STANDARDS INSTITUTE (ISO)

ISO 10012 - Measurement management systems - Requirements for measurement processes and measuring equipment.

(Copies are available online at http://www.iso.org/iso/home.htm or from American National Standards Institute, 13th Floor, 11 West 42nd Street, New York, NY 10036-0350).

Downloaded from http://www.everyspec.com

SOCIETY OF AUTOMOTIVE ENGINEERS

SAE-AS50861	-	Wire, Electric, Polyvinyl Chloride Insulated, Copper or Copper Alloy.
SAE-AS7928	-	Terminal, Lug Splices, Conductor, Crimp Style, Copper, General Specification for.
SAE-AS20659	-	Terminal, Lug, Crimp Style, Copper, Uninsulated, Ring Tongue, Type I, Class 1 for 175°C Total Conductor Temperature.
SAE-AS25036	-	Terminal, Lug, Crimp Style, Copper, Insulated, Ring-Tongue, Bell-Mouthed, Type II, Class 1 (for 105ºC Total Conductor Temperature).

(Copies of this document is available online at http://www.sae.org/ or from the Society of Automotive Engineers, 400 Commonwealth Drive, Warrendale, PA 15096-0001.)

UNDERWRITERS LABORATORIES, INCORPORATED (UL)

UL 489	-	Molded-Case Circuit Breakers, Molded-Case Switches and Circuit-Breaker Enclosures.
UL 1077	-	Protectors for Use in Electrical Equipment, Supplementary.

(Copies of this document are available online at http://www.ul.com or from the Underwriters Laboratories Inc., 333 Pfingsten Road, Northbrook, IL 60062-2002).

2.4 Order of precedence. Unless otherwise noted herein or in the contract, in the event of a conflict between the text of this document and the references cited herein (except for related specification sheets) the text of this document takes precedence. Nothing in this document, however, supersedes applicable laws and regulations unless a specific exemption has been obtained.

3. REQUIREMENTS

3.1 Specification sheets. The individual item requirements shall be as specified herein and in accordance with the applicable specification sheet. In the event of any conflict between requirements of this specification and the specification sheet, the latter shall govern.

3.2 Circuit breaker categories. Circuit breakers furnished under this specification shall be category I, category II, or category III, as defined herein.

3.2.1 Category I. Circuit breakers completely defined by a specification sheet (see 3.1, 4.4, and 6.2).

3.2.2 Category II. Circuit breakers are the same as category I, except for minor differences such as mounting means, current rating, voltage, time delay, and coil properties, which do not change the basic interface and physical dimensions of the qualified circuit breaker. Category II circuit breakers shall be procured from a source listed on the applicable QPL for the particular similar product in category I. Category II circuit breakers are nonstandard (see 4.6.1 and 6.2).

3.2.3 Category III. Circuit breakers not covered by specification sheets. These circuit breakers are nonstandard (see 4.6.2 and 6.2).

3.3 Qualification. Category I circuit breakers furnished under this specification shall be products that are authorized by the qualifying activity for listing on the applicable qualified products list before contract award (see 4.4 and 6.3).

3.4 Material. Material shall be used which will enable the circuit breaker to conform to the performance requirements of this specification. Acceptance or approval of any constituent material shall not be construed as a guaranty of the acceptance of the finished product (see 6.5 for supplemental information).

3.4.1 Metals. Metals shall be of a corrosion-resistant type or shall be suitably plated or treated to resist corrosion (see 3.21). Cadmium and zinc plating shall not be used.

3.4.1.1 Dissimilar metals. When dissimilar metals are used in intimate contact with each other, protection against electrolysis and corrosion shall be provided. The use of dissimilar metals in contact, which tend toward active electrolytic corrosion (particularly brass, copper, or steel used in contact with aluminum or aluminum alloy) is not acceptable. However, metal plating or metal spraying of dissimilar base metals to provide similar or suitable abutting surfaces is permitted. The use of dissimilar metals separated by a suitable insulating material is also permitted. Dissimilar metals are defined in 6.4.

3.4.1.2 Decals. Metal or metalized labels shall not be used.

Downloaded from http://www.everyspec.com

3.4.2 Fungus resistance. Materials shall be used that are not nutrients for fungus.

3.4.3 Solder and soldering flux. The solder and solder flux shall be of such a quality as to enable the circuit breaker to meet the performance requirements of this specification.

3.5 Interface and physical dimensions . Circuit breakers shall be of the interface and physical dimensions specified (see 3.1).

3.5.1 Trip-free feature. Circuit breakers shall be designed so that the circuit cannot be maintained closed by physically holding the actuator lever in the closed position when any pole is carrying overload currents that would normally automatically trip the circuit breaker to the open position.

3.5.2 Trip indication. Circuit breakers shall be designed so that the circuit breaker contacts open automatically on overload, the actuator lever shall indicate the operation by moving to the “off” (“trip”) position.

3.5.3 Attitude. Circuit breakers shall be constructed to trip within maximum and minimum limits of the specified trip times (see 3.1 and 6.6.5), when mounted on a vertical panel (normal mounting means) (see 4.8.5).

3.5.4 Actuator. The actuator shall be as specified (see 3.1). The exposed portion of actuators shall be insulated from all current-carrying parts. The exposed portion of metal actuators shall have a smooth, nonglare, metallic finish. Actuators shall not work to an intermediate position, give a false trip indication, or be removable from the circuit breaker. Multipole circuit breakers having individual pole actuators (see 6.6.3), shall be provided with handle ties for convenient manual switching, and the circuit breaker shall be such that it will be impossible by any manipulation of the actuator to close less than the total number of contacts. Actuators of the lever type shall point in the “normally upward” (top of the circuit breaker) direction when the circuit breaker is in the “closed” (“on”) position. Actuators of the push-pull type shall be in the “closed” (“on”) position when the actuator button is pushed in.

3.5.5 Mounting means. Mounting means shall be as specified (see 3.1).

3.5.6 Terminal and mounting hardware (as applicable). Terminal and mounting hardware shall be as specified (see 3.1). For direct Government procurement, the hardware shall be assembled in proper order, as specified

3.5.7 Threaded parts. Screw threads on external threaded parts used for mounting shall be in accordance with FED-STD-H28.

3.5.8 Terminals.

3.5.8.1 Line and load terminals (see 6.6.2). The main line and load terminals shall be designed and mounted as specified (see 3.1). For bushing-mounted types of circuit breakers, where a locating keyway is used, load terminals will be on the side of the keyway and line terminals will be on the side opposite the keyway. Each terminal shall be capable of carrying rated current and voltage per pole of the circuit breaker.

3.5.8.2 Auxiliary contact terminals. When specified (see 3.1) circuit breakers shall be provided with auxiliary contacts (see 6.6.1) of the specified switching type, and terminals of the design and location specified (see 3.1). Contacts and terminals shall be capable of carrying specified loads. Auxiliary contacts shall be of double throw configuration with permanent designations as follows adjacent to the contact terminals: “NO” for normally open, “NC” for normally closed, and “C” for common. The auxiliary contacts shall be arranged in a manner to ensure (regardless of actuating lever or push-button position) that the normally open contacts are closed when the main circuit breaker contacts are closed, and the normally closed contacts are closed when the main circuit breaker contacts are open.

3.5.8.2.1 Solder terminals. Unless otherwise specified, solder terminals may be of any shape and shall be capable of being readily soldered. Solder terminals shall not be gold plated.

3.5.9 Reset mechanism. The reset mechanism shall be such that retaining the actuator in the closed position after automatic tripping occurs shall not adversely affect subsequent performance of the circuit breaker.

3.5.10 Tamper-proof calibration. Circuit breakers shall be secured with a tamper-proof closure so that the calibration of the device is kept intact and cannot be disturbed without it being dismantled.

3.5.11 Solder. Solder shall not be used primarily for obtaining mechanical strength. Electrical connections shall be mechanically secure before soldering and electrically continuous after soldering.

3.5.12 Voltage rating. Voltage rating shall be as specified (see 3.1).

Downloaded from http://www.everyspec.com

3.5.13 Continuous current carrying capacity. Circuit breakers shall be capable of carrying the rated current as specified (see 3.1).

3.5.14 Circuit diagram. The circuit diagram shall be as specified (see 3.1).

3.6 Solderability (applicable to solder terminals). When circuit breakers are tested as specified in 4.8.2, 95 percent of the total length of fillet, which is between the standard wrap wire and the terminal, shall be tangent to the surface of the terminal being tested. There shall be no pinholes, voids, etc. A ragged or interrupted line at the point of tangency between the fillet and the terminal under test shall be considered a defect. After the test, there shall be no evidence of fracture, loosening of parts, or any other mechanical failure of the circuit breakers. A movement of the terminals within the confines of the terminal-anchoring device will be permitted provided continuity of electrical contact is not impaired. When any movement of the terminal is noted, the dielectric withstanding voltage shall be as specified in 3.7.

3.7 Dielectric withstanding voltage. When circuit breakers are tested as specified in 4.8.3, the leakage current shall not exceed 500 microamperes with the exception of 1 mA after 1 hour following the moisture resistance test. There shall be no evidence of flashover, mechanical damage, arcing, or breakdown.

3.8 Insulation resistance. When circuit breakers are tested as specified in 4.8.4, the insulation resistance shall be not less than 100 megohms.

3.9 Calibration. When circuit breakers are tested as specified in 4.8.5, the tripping time (see 6.6.6) shall not exceed the limits as specified (see 3.1). Circuit breakers shall also trip within these specified limits when subjected to the trip-free calibration test (see 4.8.16). In multipole circuit breakers, all poles shall trip upon application of overload on any pole or combination of poles. Circuit breakers tested for high inrush (see 3.1) shall not trip during the high-inrush test. Circuit breakers requiring the voltage trip test shall trip within 30 milliseconds after application of each specified voltage (see 3.1).

3.10 Resistance or impedance. When circuit breakers are tested as specified in 4.8.6, the main series resistance or impedance shall not exceed the maximum values specified (see 3.1), except after endurance and interrupting capacity. The variation after these tests shall be within plus 10 percent or 0.1 ohm, whichever is greater, than the specified values (see 3.1). The auxiliary contact resistance shall not exceed 0.050 ohm initially or 0.10 ohm after endurance.

3.11 Actuator (see 4.8.7).

3.11.1 Actuator strength. When circuit breakers are tested as specified in 4.8.7.1, there shall be no evidence of mechanical damage after the specified load (see 3.1) is applied to the actuator lever or pushbutton.

3.11.2 Actuator operating force. When circuit breakers are tested as specified in 4.8.7.2, the applied force necessary to operate the lever in either direction shall not exceed the value specified (see 3.1).

3.12 High-temperature and low-temperature operation. When circuit breakers are tested as specified in 4.8.8, there shall be no evidence of mechanical damage and tripping time shall not exceed the extreme temperature limits specified (see 3.1), and when applicable, the auxiliary contacts shall operate as specified in 3.5.8.2. Circuit breakers shall also meet the following requirements when tested under the conditions specified in 4.8.8:

a. Dielectric withstanding voltage (see 3.7).

b. Insulation resistance (see 3.8).

3.13 Endurance. When circuit breakers are tested as specified in 4.8.9, there shall be no failure and no evidence of mechanical damage or loosening of parts. Circuit breakers shall also meet the following requirements:

a. Dielectric withstanding voltage (see 3.7).

b. Insulation resistance (see 3.8).

c. Calibration (see 3.9).

d. Resistance or impedance (see 3.10).

Downloaded from http://www.everyspec.com

3.14 Terminal strength. When circuit breakers are tested as specified in 4.8.10, there shall be no short-circuiting, breakage, loosening, bending, stripping of threads, or rotation of terminals, as applicable, and no damage to the circuit breaker body around the terminals.

3.15 Mounting strength. When circuit breakers are tested as specified in 4.8.11, there shall be no breakage, malfunction, or evidence of any damage which would impair the ability of the breakers to meet the requirements of subsequent tests.

3.16 Vibration. When circuit breakers are tested as specified in 4.8.12, main circuit breaker contacts shall not trip. There shall be no closing of open main or auxiliary contacts, nor opening of closed main or auxiliary contacts in excess of 10 microseconds duration, nor shall there be any evidence of mechanical or electrical damage.

3.17 Moisture resistance. When circuit breakers are tested as specified in 4.8.13, the change in resistance or impedance between the initial and final recorded measurements shall not exceed 10 percent for circuit breaker current ratings of less than 5.0 amperes; 25 percent for current ratings of 5.0 through 25.0 amperes; 30 percent for current ratings over 25.0 through 50.0 amperes; and shall not deviate more than 50 percent for circuit breakers over 50 amperes through 100 amperes. The insulation resistance shall be a minimum of 1 megohm (wet) at the end of the 10th cycle and a minimum of 100 megohms at the end of the 24-hour drying period and there shall be no evidence of breaking, cracking, spalling, or loosening of terminals. Circuit breakers shall also meet the following requirements:

a. Dielectric withstanding voltage (see 3.7).

b. Calibration (see 3.9).

3.18 Thermal shock. When circuit breakers are tested as specified in 4.8.14, there shall be no evidence of mechanical damage.

3.19 Shock. When circuit breakers are tested as specified in 4.8.15, main circuit breaker contacts shall not trip. There shall be no closing of open main or auxiliary contacts, nor opening of closed main or auxiliary contacts, nor shall there be any evidence of mechanical or electrical damage.

3.20 Trip-free calibration. When circuit breakers are tested as specified in 4.8.16, tripping times shall be as specified in 3.9. After the circuit breaker has tripped, the contacts shall not automatically return to the closed position even momentarily. Subsequent performance of the circuit breaker shall not be adversely affected. The auxiliary contacts shall indicate the main contact condition even when the actuator is held in the closed position (see 3.5.8.2).

3.21 Salt atmosphere (corrosion). When circuit breakers are tested as specified in 4.8.17, there shall be no evidence of excessive corrosion (see 3.4.1). Excessive corrosion is defined as that which interferes with the electrical or mechanical performance. There shall be no warping, cracking, or other damage to the circuit breaker. After the test, the hardware, if applicable (see 3.5.6), shall be readily removable.

3.22 Temperature rise. When circuit breakers are tested as specified in 4.8.18, they shall not trip and the temperature rise of the terminals shall not exceed 25ºC for 10.0 ampere circuit breakers and below, 35ºC for circuit breakers over 10.0 amperes through 25.0 amperes, and 50ºC for circuit breakers over 25.0 amperes through 100 amperes (55ºC for circuit breakers over 50 amperes through 100 amperes tested at 400 Hz).

3.23 Interrupting capacity. When circuit breakers are tested as specified in 4.8.19, circuit breakers shall trip automatically; there shall be no dielectric breakdown, and when applicable (see 3.1 and 3.5.8.2), the auxiliary contacts shall operate, indicating position of the main contacts. Circuit breakers shall also meet the following requirements:

a. Dielectric withstanding voltage (see 3.7).

b. Trip at 200 percent of rated current (see 3.9).

c. Resistance or impedance (see 3.10).

3.24 Panel seal. When circuit breakers are tested as specified in 4.8.20, there shall be no visible air bubbles indicative of leakage.

3.25 Marking (see 3.1).

3.25.1 Identification marking. The following information shall be marked on the circuit breaker in accordance with MIL-STD-1285. The resistance to solvents test does not apply.

Downloaded from http://www.everyspec.com

a. Part number (see 3.1).

b. Current rating, voltage, and operating frequency (see 3.1).

c. Supplier's name or code symbol and date code.

d. Circuit schematic using symbols in accordance with IEEE STD 315. Metal or metalized labels shall not be used.

3.25.2 Other marking. The "on" and "off" positions of lever-type actuators (see 3.5.4); the main "line" terminal(s) (see 6.6.2); and where applicable, the auxiliary contact terminals (see 3.1 and 3.5.8.2) and line and load terminal numbers (see 3.1), shall be clearly and permanently marked on each unit. Multipole breakers with mixed current ratings and/or trip curves shall be marked so the ratings of each pole are identified.

3.26 Recycled, recovered, or environmentally preferable materials. Recycled, recovered, or environmentally preferable materials should be used to the maximum extent possible, provided that the material meets or exceeds the operational and maintenance requirements, and promotes economically advantageous life cycle costs.

3.27 Workmanship. Circuit breakers shall be processed in such a manner as to be uniform in quality and shall be free from cracked or displaced parts, sharp edges, burrs and other defects that will affect life, serviceability or appearance.

4. VERIFICATION

4.1 Classification of inspections. The inspection requirements specified herein are classified as follows:

a. Qualification inspection (category 1 circuit breakers only) (see 4.4).

b. Verification of qualification (see 4.5).

c. Inspection of categories II and III circuit breakers (see 4.6).

d. Conformance inspection (see 4.7).

4.2 Test equipment and inspection facilities. The manufacturer shall establish and maintain a calibration system in accordance with NCSL Z540.3, ISO 10012, or equivalent system as approved by the qualifying activity.

4.3 Inspection conditions. Unless otherwise specified herein, all inspections shall be performed in accordance with the test conditions specified in the "GENERAL REQUIREMENTS" of MIL-STD-202.

4.3.1 Power supply. Unless otherwise specified herein, the power supply shall have no more than 10 percent regulation at the specified test load. A dc power supply shall have no more than 5 percent voltage ripple. An ac power supply shall be within 10 percent of the specified frequency and shall be sinusoidal with a form factor of 1.25 maximum. When specified (see 3.1), the ac or dc power supply shall be capable of simulating the normal and abnormal power conditions described in MIL-STD-704.

4.4 Qualification inspection (category I circuit breakers only, see 3.2.1). Qualification inspection shall be performed at a laboratory acceptable to the Government (see 6.3) on sample units produced with equipment and procedures normally used in production.

4.4.1 Sample size. The number of circuit breakers to be subjected to qualification inspection shall be as specified in the appendix to this specification.

4.4.2 Inspection routine (specification sheet 1 through sheet 12) tripping time delays A through G. Sample units, grouped as specified in the appendix, shall be subjected to the qualification inspection specified in table I, in the order shown. All 42 sample units shall be subjected to the inspection of group I. Then the 42 sample units shall be allocated as follows into six 7-unit groups, as specified in the appendix, and subjected to the inspection for their particular group.

Group II	-	One 7-unit group covering the highest current rating.
Groups III, IV, and V	-	One 7-unit group each; each 7-unit group uniformly composed of circuit breakers at either the highest or lowest current rating at the option of the supplier.

Downloaded from http://www.everyspec.com

Group VI - One 7-unit group covering the highest current rating and one 7-unit group covering the lowest current rating.

(For inspection routine of tripping time delays H, I, and J, see A.3.1).

TABLE I. Qualification inspection.

Inspection	Requirement paragraph	Test method paragraph
Group I (all sample units) 1/		
Visual and mechanical inspection 2/	3.1, 3.4 to 3.5.14 inclusive, 3.26	4.8.1
Solderability (applicable to solder terminals) (3 sample units only)	3.6	4.8.2
Dielectric withstanding voltage 3/	3.7	4.8.3
Insulation resistance	3.8	4.8.4
Calibration	3.9	4.8.5.1
Resistance or impedance	3.10	4.8.6
Actuator strength (2 sample units only)	3.11.1	4.8.7.1
Group II		
High-temperature and low-temperature operation 4/	3.12	4.8.8
Endurance 3/	3.13	4.8.9
Actuator operating force (2 sample units only)	3.11.2	4.8.7.2
Group III		
Terminal strength	3.14	4.8.10
Mounting strength	3.15	4.8.11
Vibration	3.16	4.8.12
Moisture resistance	3.17	4.8.13
Group IV		
Thermal shock	3.18	4.8.14
Shock	3.19	4.8.15
Moisture resistance	3.17	4.8.13
Group V 5/		
Trip-free calibration 3/	3.20	4.8.16
Salt atmosphere (corrosion)	3.21	4.8.17
Group VI		
Temperature rise 3/	3.22	4.8.18
Interrupting capacity 3/	3.23	4.8.19
Panel seal (2 sample units only) 5/	3.24	4.8.20

1/ Nondestructive inspections and tests.
2/ Dimensional measurements may be made on two units only.
3/ This test is not required for initial qualification when documentation in the form of the UL engineering report in accordance with UL 489 or UL 1077 or both is furnished.
4/ When applicable (see 3.1).
5/ After completion of group V tests, one circuit breaker of the group shall be opened and examined internally in accordance with 4.8.1.

4.4.3 Failures. One or more failures shall be cause for refusal to grant qualification approval.

Downloaded from http://www.everyspec.com

4.5 Verification of qualification. To retain qualification, the contractor shall provide verification to the qualifying activity of the following items every 12 months:

a. Design of the circuit breaker has not changed.

b. Verification that the conformance inspections have been performed on inspection lots supplied to the requirements of this specification.

c. Verification that the periodic inspections have been performed as applicable. The inspections shall consist of the examinations and tests specified in table II in the order shown. If test results indicate nonconformance with the specification requirements, and corrective action acceptable to the qualifying activity has not been taken, action may be taken to remove the failing product from the QPL.

d. Contractors shall provide certification of current UL listing and an analysis of any discrepancy found during the UL follow-up service program affecting quality of product or changes in interface and physical dimensions.

In the event that no production occurred during the reporting period, the contractor shall still verify to the qualifying activity that the capacity to manufacture and test QPL circuit breakers still exists and that the contractor wants to remain on the QPL. If, during two consecutive reporting periods, there has been no production, the manufacturer may be required, at the discretion of the qualifying activity, to submit a representative product of the highest and lowest current rating covered by each major design set to testing in accordance with the qualification inspection requirements.

4.5.1 Failures. If one or more sample units fail to pass verification of qualification inspection, the sample shall be considered to have failed.

4.5.2 Disposition of sample units. Sample units which have been subjected to the inspections in table II shall not be delivered on the contract or order.

4.6 Inspection of categories II and III circuit breakers (items not covered by specification sheets). Inspection requirements for items not covered by specification sheets shall be performed by the contractor, after award of contract, and prior to production (see 6.2).

4.6.1 Category II circuit breakers. Additional tests to verify suitability of the variations from category I circuit breakers shall be as specified (see 6.2).

4.6.2 Category III circuit breakers. Unless otherwise specified (see 6.2), the inspection requirements shall be as specified in 4.4 through 4.4.2, inclusive.

4.7 Conformance inspection.

4.7.1 Inspection of product for delivery. Inspection of product for delivery shall consist of group A inspection.

4.7.1.1 Inspection lot. An inspection lot shall consist of all the circuit breakers covered by a single specification sheet produced under essentially the same conditions, and offered for inspection at one time. In addition, circuit breakers, similar in design and number and number of poles except for the presence of auxiliary contact terminals, may be combined to form a lot, provided that a proportional quantity of sample units with and without auxiliary contact terminals are incorporated into the sample.

Downloaded from http://www.everyspec.com

TABLE II. Verification of qualification inspection.

Inspection 1/, 3/	Part number	Requirement paragraph	Test method paragraph	Number of samples
(1st Quarter) Shock and dimensions	M55629/2-001 M55629/1-128 M55629/4-001 M55629/3-128 M55629/6-001 M55629/5-128 M55629/20AL M55629/7-114 M55629/21ALAL M55629/9-114 M5562292/22ALALAL M55629/11-114	3.1, 3.5, and 3.19	4.8.1 and 4.8.15	1 1 1 1 1 1 1 1 1 1 1 1
(2nd Quarter) Vibration and dimensions	M55629/2-005 M55629/1-132 M55629/4-005 M55629/3-132 M55629/6-005 M55629/5-132 M55629/20AP M55629/7-118 M55629/21APAP M55629/9-118 M55629/22APAPAP M55629/11-118	3.1, 3.5 and 3.16	4.8.1 and 4.8.12	1 1 1 1 1 1 1 1 1 1 1 1
(3rd Quarter) Salt atmosphere and dimensions	M55629/2-003 M55629/1-130 M55629/4-003 M55629/3-130 M55629/6-003 M55629/5-130 M55629/20AM M55629/7-116 M55629//21AMAM M55629/9-116 M55629/22AMAMAM M55629/11-116	3.1, 3.5, and 3.21	4.8.1 and 4.8.17	1 1 1 1 1 1 1 1 1 1 1 1
(4th Quarter) 2/	M55629/2-129 M55629/4-129 M55629/6-129 M55629/8-115 M55629/10-115 M55629/12-115 M55629/20UM M55629/21UMUM M55629/22UMUMUM	3.1, 3.5, 3.6, 3.17, and 3.18	4.8.1, 4.8.2, 4.8.13 and 4.8.14	2 2 2 1 1 1 1 1 1

1/ Dimensions taken shall be variables data. Dimensional verification may be waived with approval from the qualifying activity if the contractor can demonstrate that these tests have been performed for three consecutive periods with zero failures.

2/ Thermal shock and dimensions shall be performed the 4th quarter of the first year, solderability and dimensions shall be performed the 4th quarter of the second year, and moisture resistance and dimensions shall be performed the 4th quarter of the 3rd year. After the 3rd year, the sequence repeats.

3/ If the contractor can demonstrate that these tests have been performed for three consecutive periods with zero failures, the frequency of these tests may be reduced after approval by the qualifying activity. (i.e.; each quarterly test would become an annual test taking 6 years to complete a total cycle). If the design, material, construction, or processing of the circuit breakers change, or if there are any quality problems or failures, the qualifying activity may require resumption of the original test frequency.

Downloaded from http://www.everyspec.com

4.7.1.2 Group A inspection. Group A inspection shall consist of the inspections specified in table III.

4.7.1.2.1 Sampling plan. Group A inspection shall be on an inspection lot basis. Samples shall be selected in accordance with table IV, based on the inspection lot. If there are one or more failures, the inspection lot shall be considered to have failed.

TABLE III. Group A inspection.

Inspection	Requirement paragraph	Test method paragraph
Marking	3.25 through 3.25.2	
Workmanship	3.27	
Dielectric withstanding voltage	3.7	4.8.3
Insulation resistance	3.8	4.8.4
Calibration (mounted in the vertical plane only)	3.9	4.8.5.2

4.7.1.2.2 Rejected lots. The rejected lots shall be segregated from new lots and those lots which have passed inspection. The supplier may rework it to correct the defect or 100 percent inspect the lot and remove all defective parts. The rejected lot shall then be inspected in accordance with table IV for those quality characteristics found defective in the sample. If one or more defects are found in this second sample, the lot shall be rejected and shall not be supplied to this specification.

4.7.1.2.3 Disposition of sample units. Sample units which have passed all the group A inspections may be delivered on the contract or order, if the lot is accepted and the sample units are still within specified electrical tolerances.

TABLE IV. Group A zero defect sampling plan.

Lot size			Sample size
1	-	13	100 percent
14	-	150	13
151	-	280	20
281	-	500	29
501	-	1,200	34
1,201	-	3,200	42
3,201	-	10,000	50
10,001	-	35,000	60
35,001	-	150,000	74
150,001	-	500,000	90
500,001	-	and up	102

4.8 Methods of examination and test.

4.8.1 Visual and mechanical inspection. Circuit breakers shall be examined to verify that dissimilar metals, interface, physical dimensions, marking, and workmanship are in accordance with the applicable requirements. (see 3.1, 3.4 to 3.5.14 inclusive, and 3.27).

4.8.2 Solderability (see 3.6). Circuit breaker solder terminals shall be tested in accordance with method 208 of MIL-STD-202. The following detail and exception shall apply:

a. Number of terminations to be tested - Solder or tab type.

b. Examination of terminations - Method for evaluation of lugs and tabs shall apply.

Downloaded from http://www.everyspec.com

4.8.3 Dielectric withstanding voltage (see 3.7). Circuit breakers shall be tested in accordance with method 301 of MIL-STD-202. The following details shall apply:

a. Magnitude of test voltage - 1,000 volts (rms) plus twice the rated voltage of the circuit breaker, for points of application C 1, 2, and 3; 600 volts (rms), for points of application C 4 and 5. Duration of application shall be 1 minute for qualification and group B tests; 5 seconds for group A tests.

   Optional method - Use 2000 volts on units rated 250 volts and below and 2700 volts on units rated 250 volts and above for points of application C1, 2 and 3 for 1 second. Use 1000 volts for points of application C3 and 4 for 1 second.

   Tolerance for test voltage above shall be +10%,-0%.

b. Nature of potential: AC.

c. Points of application of test voltage:

   (1) Between all main circuit breaker terminals tied together and ground (any exposed metal part except terminals, or if none, a metal mounting panel with the circuit breaker mounted thereon), with the circuit breaker main contacts in closed and open position.

   (2) Between all auxiliary contact terminals tied together and main circuit breaker terminals tied together with circuit breaker main contacts in closed and open positions.

   (3) Between poles of multipole breakers with the line terminal of each pole tied to the corresponding load terminal of that pole, with circuit breaker main contacts in closed and open positions.

   (4) Between all auxiliary contact terminals tied together and ground (any exposed metal part except terminals, or if none, a metal mounting panel with the circuit breaker main contacts in closed and open positions).

   (5) Between each open pair of auxiliary contact terminals, with circuit breaker main contacts in closed and open position.

d. Measurement during test: The circuit shall be continuously monitored during application of the test voltage to determine if the leakage current exceeds 0.5mA.

e. Examinations after test: Circuit breakers shall be examined for evidence of flashover, mechanical damage, arcing, and breakdown.

4.8.4 Insulation resistance (see 3.8). Circuit breakers shall be tested in accordance with method 302 of, MIL-STD-202. The following details shall apply:

a. Test condition: B.

b. Point of measurement:

   (1) Between all main circuit breaker terminals tied together or individually and ground (any exposed metal part except terminals, or if none, a metal mounting panel with the circuit breaker mounted thereon), with the circuit breaker main contacts in closed and open positions.

   (2) Between all auxiliary contact terminals tied together or individually and main circuit breaker terminals tied together or individually with circuit breaker main contacts in closed and open positions.

   (3) Between poles of multipole breakers with the line terminal of each pole tied to the corresponding load terminal of that pole or tested individually with circuit breaker main contacts in closed and open positions.

   (4) Between all auxiliary contact terminals tied together or individually and ground (any exposed metal part except terminals, or if none, a metal mounting panel with the circuit breaker mounted thereon), with the circuit breaker main contacts in closed and open positions.

   (5) Between each open pair of auxiliary contact terminals, with circuit breaker main contacts in closed and open positions.

Downloaded from http://www.everyspec.com

4.8.5 Calibration (see 3.9).

4.8.5.1 Method I (used for qualification inspection). Circuit breakers shall be mounted by their normal mounting means (see 3.5.5) and tested in the vertical mounting position. Circuit breakers shall be connected as shown on figure 1, with leads and terminals attached as specified. Tripping times shall then be measured when circuit breakers are subjected to the specified percentages (see 3.1) of rated current applied as a step function (ac or dc), except for 100 percent. The sample units shall be divided as evenly as possible (with respect to current rating and time delay) into three groups for testing at the following voltages and frequencies: 50 V dc, 240 V ac at 60 Hz, and 240 V ac at 400 Hz. There shall be sufficient time (not less than 10 minutes) between each application of current to permit proper cooling of the circuit breaker. Circuit breakers rated for high inrush (see 3.1) shall be subjected to a half wave of a 60 Hz waveform for 60 Hz devices and a half wave of a 400 Hz or 60 Hz waveform for dc and 400 Hz devices. The peak value of the half wave shall be as specified, (see 3.1). Normally, tests shall be conducted within the rated operating voltage (see 3.5.12). However, if the inherent resistance or impedance of the circuit breaker precludes attainment of the required percentages of overload current at the rated operating voltage, for the purpose of determining tripping times and high inrush capabilities, the voltage shall be increased as necessary, up to a maximum of 40 percent. If the specified overload current cannot be obtained with a maximum increase in voltage of 40 percent, tests of these particular overload levels shall be omitted with qualification activity approval. Each section of multipole breakers shall be subjected to the calibration current specified, with remaining pole or poles passing no current.

4.8.5.2 Method II (used for group A inspection, high-temperature and low-temperature operation, endurance, moisture resistance, trip-free calibration, and interrupting capacity). Circuit breakers shall be tested as specified in 4.8.5.1, except that only 125 percent and/or 150 percent (as specified), and 200 percent of rated current shall be applied, and the applied voltage should be at a level sufficient to maintain the specified percent of rated current during testing.

4.8.6 Resistance or impedance (see 3.10). With the circuit breakers mounted in their normal vertical mounting position, the resistance or impedance shall be measured between main terminals of each pole at 100 percent rated current, and applicable frequency (see 3.1), using the voltmeter-ammeter method. These measurements shall be made and recorded after the circuit breaker has been subjected to these conditions for 1 hour. Auxiliary contact resistance shall be measured using the voltmeter-ammeter method with a 20 V ac or V dc source with limiting resistance to 1 ampere. Both the normally open and normally closed contacts shall be measured. The voltage sensitive poles shall be measured using the volt-ammeter method using a 20 volts minimum ac or dc source with limiting resistance to 100 milliamperes. All measurements herein shall comply with the requirements of 3.10.

4.8.7 Actuator (see 3.11).

4.8.7.1 Actuator strength (lever type) (see 3.11.1). Circuit breakers shall have the specified load (see 3.1) applied to the tip of the actuator lever for 1 minute under each of the following conditions:

a. Normal to the lever axis in the plane of lever travel at each extreme position of the lever.

b. Normal to the lever axis and normal to the plane of lever travel at each extreme position of the lever.

c. Coaxial with the lever axis toward the lever pivot throughout the entire range of lever travel.

d. Coaxial with the lever axis away from the lever pivot throughout the entire range of lever travel.

Circuit breakers shall be examined for evidence of mechanical damage.

Downloaded from http://www.everyspec.com

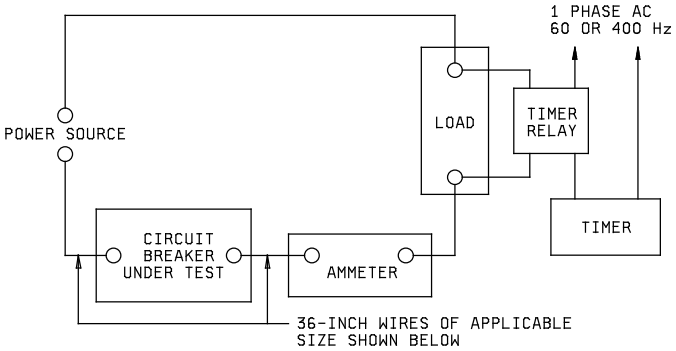

Circuit breaker capacity (amperes) 1/	Wire size (AN designation)	Uninsulated terminal lug (MS part no.) 2/	Insulated terminal lug (MS part no.) 2/
1 and below	20	SAE-AS20659 3/	SAE-AS25036 3/
2 to 6 inclusive	18	SAE-AS20659 3/	SAE-AS25036 3/
7 to 10 inclusive	16	SAE-AS20659 3/	SAE-AS25036 3/
11 to 15 inclusive	14	SAE-AS20659 3/	SAE-AS25036 3/
16 to 20 inclusive	12	SAE-AS20659 3/	SAE-AS25036 3/
21 to 25 inclusive	10	SAE-AS20659 3/	SAE-AS25036 3/
26 to 40 inclusive	8	SAE-AS20659 3/	SAE-AS25036 3/
41 to 55 inclusive	6	SAE-AS20659 3/	SAE-AS25036 3/
56 to 70 inclusive	4	SAE-AS20659 3/	SAE-AS25036 3/
71 to 80 inclusive	3	SAE-AS20659 3/	SAE-AS25036 3/
81 to 100 inclusive	2	SAE-AS20659 3/	SAE-AS25036 3/

1/ For circuit breakers between steps, use the AN wire of the next larger physical wire size.
2/ Test lead wires and terminals shall conform to SAE-AS50861 and SAE-AS7928, respectively.
3/ Use appropriate dash number for current rating and stud size.

FIGURE 1. Calibration-test circuit.

Downloaded from http://www.everyspec.com

4.8.7.2 Actuator operating force (lever type) (see 3.11.2). The force necessary to operate the actuator shall be applied in both directions at the tip of the lever. The force shall be applied normally to the lever axis and in the plane of lever travel. The magnitude of the operating forces shall be measured to determine compliance with 3.11.2.

4.8.8 High-temperature and low-temperature operation (see 3.12) (when specified (see 3.1)). Circuit breakers shall be conditioned for 2 hours at -40ºC ±2ºC at which temperature the calibration test shall be performed in accordance with 4.8.5.2 plus an additional test at the 100-percent level. During these tests the auxiliary contacts shall be monitored for proper operation. While still maintained at the -40ºC low temperature extreme, the insulation resistance test shall be performed in accordance with 4.8.4. Circuit breakers shall then be conditioned for 2 hours at 85ºC ±2ºC at which temperature the calibration test shall be performed in accordance with 4.8.5.2, plus an additional test at the 100-percent level. During these tests the auxiliary contacts shall be monitored for proper operation. While still maintained at the 85ºC high temperature extreme, the dielectric withstanding voltage and insulation resistance tests shall be performed in accordance with 4.8.3 and 4.8.4, respectively. Circuit breakers shall be examined for evidence of mechanical damage.

4.8.9 Endurance (see 3.13). Unless otherwise specified (see 3.1), circuit breakers shall be subjected to 10,000 mechanically performed make and break operations; (6,000 operations with the circuit breaker energized at rated current, voltage, and frequency (see 3.1) and 4,000 operations without power), at a rate not to exceed six operations per minute. Half of the sample units shall be tested with the specified inductive load and half with the specified resistive load (see 4.8.9.1). Each pole of multipole breakers shall be simultaneously subjected to the required load. (Voltage sensitive poles (see 3.1) shall be subjected to 33 electrical operations at the maximum operating voltage for each frequency.) The rate of operation shall not exceed one operation per minute. Wiring connections shall be in accordance with figure 2. When applicable, the auxiliary contacts shall also make and break the maximum rated 60 Hz voltage and current (see 3.1). Except for voltage sensitive poles, an operating cycle is defined as the mechanical closing and opening of the breaker, and the ratio of “on” time to “off” time shall be less than 1 to 5. The mechanical operation shall simulate manual operation of the breaker, including overtravel, if any (see 6.6.4). All metal parts of the circuit breaker outside the normal mounting panel shall be connected through a circuit breaker or a normal slow blow fuse as shown on figure 2. Their rating shall be 5 percent of the test load or 100 mA, whichever is greater. Where the polarity of the breaker is not specified, the power source shall be connected to one side of the breaker for half of the operations and to the other side of the breaker for the remaining operations. The grounding fuse of circuit breaker shall be observed during the test to determine if failure occurs prior to conclusion of the test. Circuit breakers shall be examined for evidence of mechanical damage or loosening of parts. Following the test, circuit breakers shall be subjected to the following tests:

a. Dielectric withstanding voltage (see 4.8.3).

b. Insulation resistance (see 4.8.4).

c. Calibration (see 4.8.5.2).

d. Resistance or impedance (see 4.8.6).

4.8.9.1 Loads. For ac inductive loads, the power factor shall be 0.75 to 0.80. For ac resistive loads, the power factor shall be between 0.90 and unity. For dc inductive loads, the time constant (L/R ratio) shall be 0.02 to 0.03.

Downloaded from http://www.everyspec.com

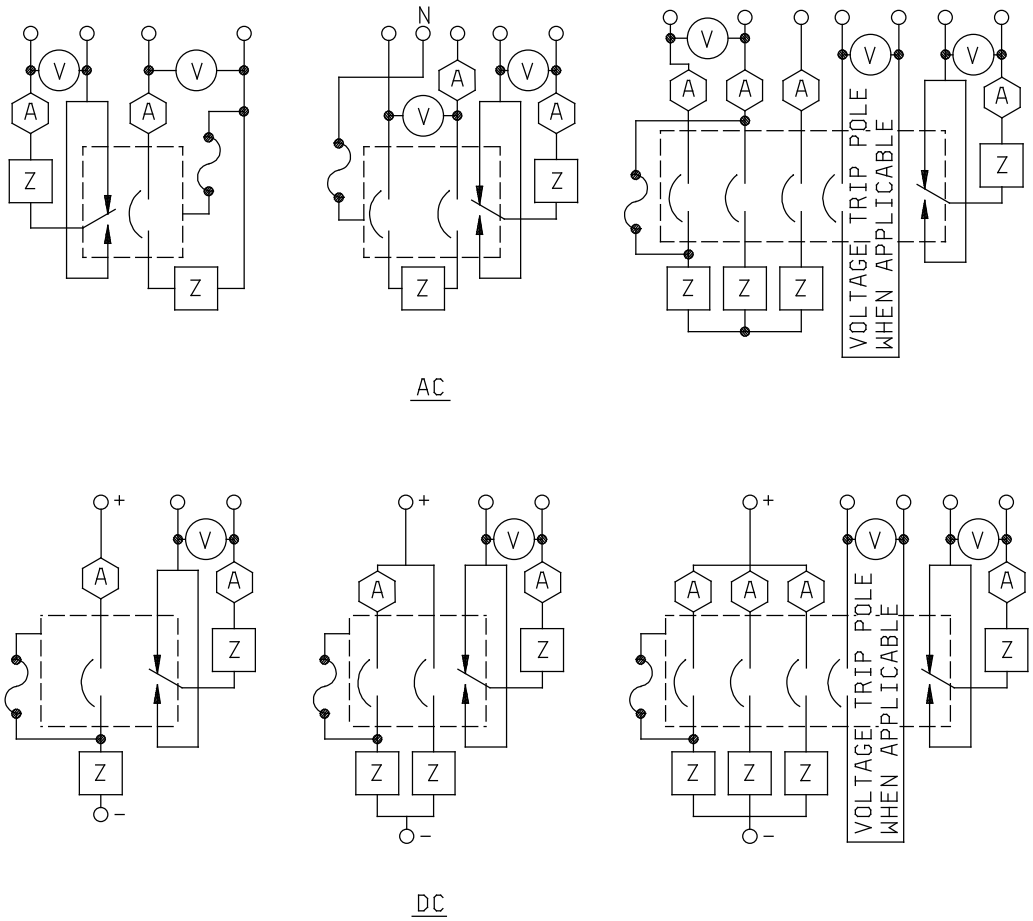

Z = impedance, inductive or resistive

FIGURE 2. DC endurance circuit wiring diagrams.

Downloaded from http://www.everyspec.com

4.8.10 Terminal strength (see 3.14). Circuit breakers shall be tested in accordance with method 211 of MIL-STD-202. The following details and exceptions shall apply:

a. Other than screw-type terminals - Test condition A.

(1) Applied force - As specified (see 3.1). Two pounds for auxiliary terminals.

(2) Direction of applied force - Perpendicular to the mounting plate or mounting surface.

b. Screw-type terminals only - Test condition E. Applied torque - See table V to each terminal.

c. Examinations after test - To verify compliance with 3.14.

TABLE V. Terminal strength.

Screw size	Full (lbs)	Torque (lbs-in)
8	25	15
10	30	22
1/4	30	35
5/16	70	80

4.8.11 Mounting strength (see 3.15). The axial load specified in table VI shall be applied to the mounting means for a period of 1 minute, using hardened steel screws. The torque specified in table VI shall then be applied to the screw head about the thread axis for 1 minute without damage to the mounting means. For single hole mounted circuit breakers, this test shall be conducted with the mounting nut assembled on the threaded bushing of the breaker. The torque for bushing-mounted circuit breakers shall be 25 pound-inches.

TABLE VI. Mounting strength.

Screw size	Axial loads (lbs)	Torque (lbs-in)
6	30	10
8	35	20

4.8.12 Vibration (see 3.16). Circuit breakers shall be tested in accordance with method 204 of MIL-STD-202. The following details and exception shall apply:

a. Tests and measurements prior to vibration - Not applicable.

b. Test condition - A.

c. Mounting method - Normal mounting means.

d. Electrical-load conditions - Half of the circuit breakers shall be tested with the main contacts closed, while energized at 100 percent rated current dc (see 3.1). The other half of the circuit breakers shall be tested with the main contacts open and unenergized.

e. Measurements during vibration - Each circuit breaker shall be monitored to determine opening or closing of contacts in the “on” and “off” position.

f. Examination after vibration - Circuit breakers shall be examined for evidence of mechanical and electrical damage.

Downloaded from http://www.everyspec.com

4.8.13 Moisture resistance (see 3.17). Circuit breakers shall be tested in accordance with method 106 of MIL-STD-202. The following details and exceptions shall apply:

a. Mounting - Mounted horizontally on a panel.

b. Initial measurements - Immediately following the initial drying period, resistance or impedance shall be measured as specified in 4.8.6.

c. Electrical-load conditions - During the first 2 hours of step 1 and step 4, circuit breakers shall be energized at rated current and at the applicable frequency (see 3.1).

d. Steps 7a and 7b are not applicable.

e. Final measurements - Upon completion of the 10th cycle and while still in the humidity chamber, insulation resistance and resistance or impedance shall be measured as specified in 4.8.4 and 4.8.6, respectively. After the 24-hour drying period, insulation resistance shall again be measured as specified in 4.8.4.

f. Examination after test - Examine for evidence of breaking, cracking, spalling or loosening of terminals.

g. Tests after moisture resistance test - Circuit breakers shall be subjected to the following tests:

(1) Dielectric withstanding voltage (see 4.8.3).

(2) Calibration (see 4.8.5.2) (except that tests at 400 percent, 600 percent, and 800 percent at rated current shall not be performed).

4.8.14 Thermal shock (see 3.18). Circuit breakers shall be tested in accordance with method 107 of MIL-STD-202. The following details shall apply:

a. Mounting - Normal mounting means with at least 1 inch of free air space around each circuit breaker.

b. Test condition - A.

c. Examination after cycling - Circuit breakers shall be examined for evidence of mechanical damage.

4.8.15 Shock (see 3.19). Circuit breakers shall be tested in accordance with method 213 of MIL-STD-202. The following details shall apply:

a. Mounting method - Normal mounting means.

b. Test condition - I (unless otherwise specified (see 3.1)).

c. Electrical-load conditions and measurements - Of the three shocks in each direction required, two shocks shall be performed with the circuit breaker energized at 100 percent rated current dc (see 3.1), except that for the directions with the operating lever pivot up (table mount) and the operating lever pivot down (ceiling mount), no voltage or current shall be applied. Each energized shock shall be monitored to determine opening of the main and, when applicable, auxiliary contacts. The remaining shock in each direction shall be performed with the circuit breaker contacts open and unenergized and shall be monitored to determine closing of the main and, when applicable, of the open auxiliary contacts.

d. Examination after shock - Circuit breakers shall be examined for evidence of mechanical and electrical damage.

4.8.16 Trip-free calibration (see 3.20). The circuit breaker actuator shall be physically held in the closed position and the breaker subjected to the calibration tests in accordance with 3.9 and 4.8.5.2.

Downloaded from http://www.everyspec.com

4.8.17 Salt atmoshere (corrosion) (see 3.21). Circuit breakers shall be tested in accordance with method 101 of MIL-STD-202. The following details shall apply:

a. Test condition - B.

b. Examination after exposure - Applicable hardware shall be removed at the conclusion of the test. Circuit breakers shall be examined for corrosion or evidence of mechanical and electrical damage.

c. Tests after salt atmosphere test - Circuit breakers shall be subjected to the following tests:

(1) Dielectric withstanding voltage (see 4.8.3).

(2) Calibration at 200 percent rated current (see 4.8.5.2).

4.8.18 Temperature rise (see 3.22). One hundred percent rated current (see 3.1) shall be applied to circuit breakers for 1 hour. Circuit breakers shall not trip and the temperature rise of the terminals shall be determined.

4.8.19 Interrupting capacity (see 3.23). Circuit breakers shall be connected to the power source with leads consisting of insulated wires of the size corresponding to the current rating of the circuit breaker; leads are not to be more than 4 feet in length. The applicable rupture current specified (see 3.1) at the corresponding open-circuit voltage and frequency specified shall be measured at the power source with the circuit breaker and its test leads replaced by temporary connections having negligible impedance compared to the test circuit. The test leads and terminals shall be as specified on figure 1.

For ac operation, unless otherwise specified (see 3.1), the circuit breakers shall be tested with essentially a resistive load. Single pole breakers shall be subjected to three operations (duty cycle) as shown on figure 3. The operation for multipole circuit breakers shall follow the pattern of operation as shown for two pole and three pole circuit breakers on figure 4 and figure 5, respectively.

For dc operation, the circuit breakers shall be tested with direct current using a test circuit having a resistive load. The circuit and operations (duty cycle) of the tests shall be as shown on figure 6, figure 7, and figure 8, respectively.

During interrupting capacity tests, after each operation, the open-circuit voltage specified shall be maintained across the breaker for a minimum of 5 seconds. There shall be sufficient time between each operation (not less than 10 minutes) to permit proper cooling of the circuit breaker. Circuit breakers that are not capable of being mechanically reset within 10 minutes shall be rejected. The 30 ampere fuse connected to the mounting plate shall not be ruptured during the tests. When applicable (see 3.1), a suitable method shall be employed to test the auxiliary contacts (see 3.5.8.2). The circuit breakers shall be observed for automatic tripping and satisfactory operation of the auxiliary contacts. Following the last operation (of the duty cycle) circuit breakers shall be subjected to the following tests:

a. Dielectric withstanding voltage (see 4.8.3).

b. Calibration at 200 percent rated current (see 4.8.5.2).

c. Resistance or impedance, main contacts only (see 4.8.6).

Downloaded from http://www.everyspec.com

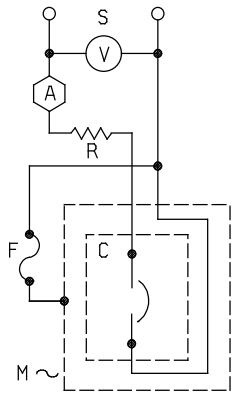

LEGEND

S - SUPPLY
V - VOLTMETER
A - RECORDING CURRENT ELEMENT
R - RESISTORS LIMITING CURRENT TO SPECIFIED VALUES
C - TEST CIRCUIT BREAKER
M - MOUNTING PLATE
F - 30 AMPERE FUSE

"O"-"CO"-"O" OPERATIONS
I-POLE CIRCUIT BREAKER TEST

NOTES:
1. "O" - Circuit breaker is closed, then fault initiated.
2. "CO" - Circuit breaker closed into existing fault.
3. Interrupting current shall be measured by a current transformer or shunt "A" and suitable recording oscillograph. The voltage across the breaker shall be recorded simultaneously with rupture current. (not shown)
4. For test circuit calibration see 4.8.19.

FIGURE 3. AC interrupting capacity test operations (duty cycle) and circuit wiring.

Downloaded from http://www.everyspec.com

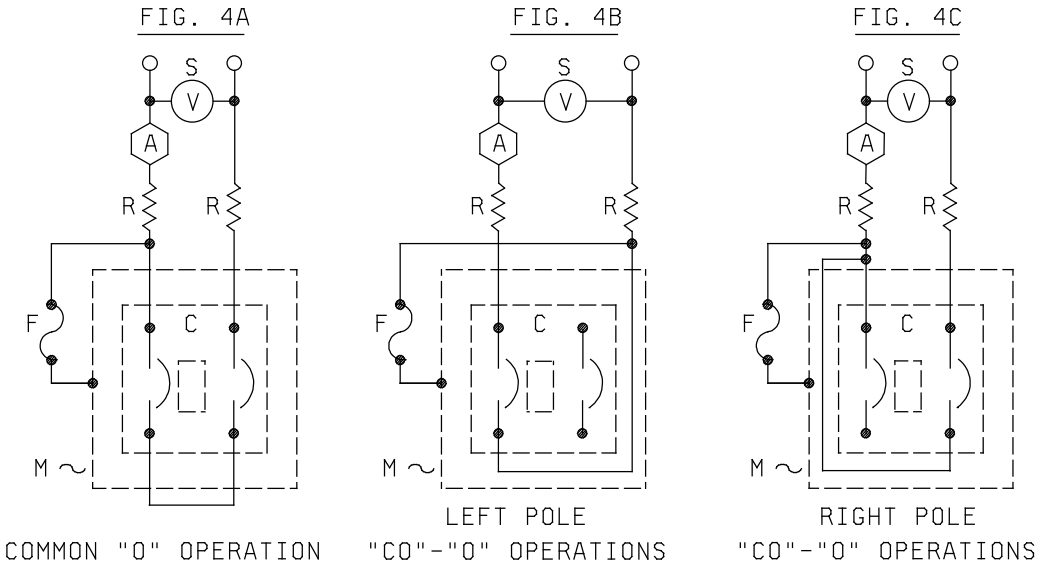

2-POLE CIRCUIT BREAKER TEST

NOTE: See figure 3 for legend and notes.

FIGURE 4. AC interrupting capacity test operations (duty cycle) and circuit wiring.

Downloaded from http://www.everyspec.com

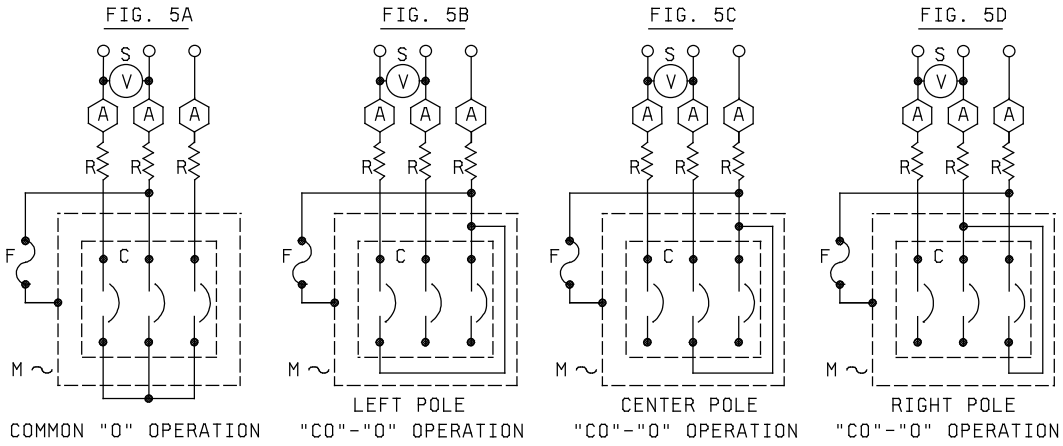

3-POLE CIRCUIT BREAKER TEST

NOTE: See figure 3 for legend and notes.

FIGURE 5. AC interrupting capacity test operations (duty cycle) and circuit wiring.

Downloaded from http://www.everyspec.com

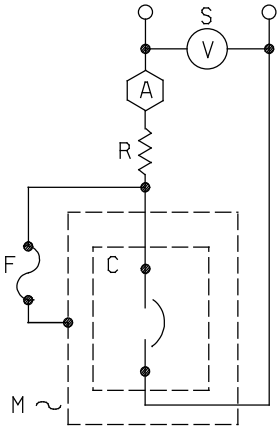

“O” - “CO” - “O” OPERATIONS

1-POLE CIRCUIT BREAKER TEST

FIGURE 6. DC interrupting capacity test operations (duty cycle) and circuit wiring.

Downloaded from http://www.everyspec.com

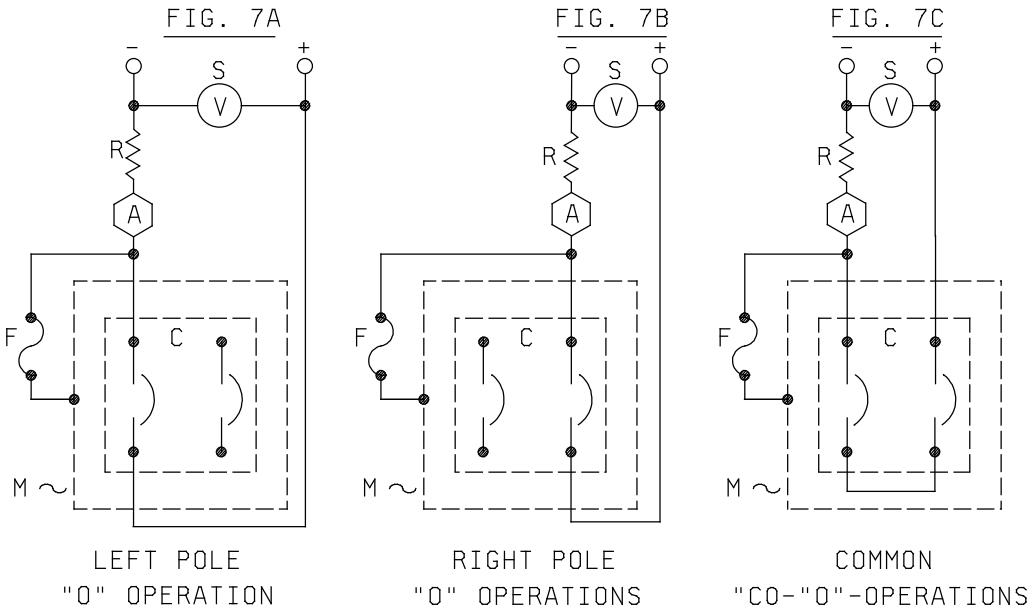

2-POLE CIRCUIT BREAKER TEST

NOTE: See figure 3 for legend and notes.

FIGURE 7. DC interrupting capacity test operations (duty cycle) and circuit wiring.

Downloaded from http://www.everyspec.com

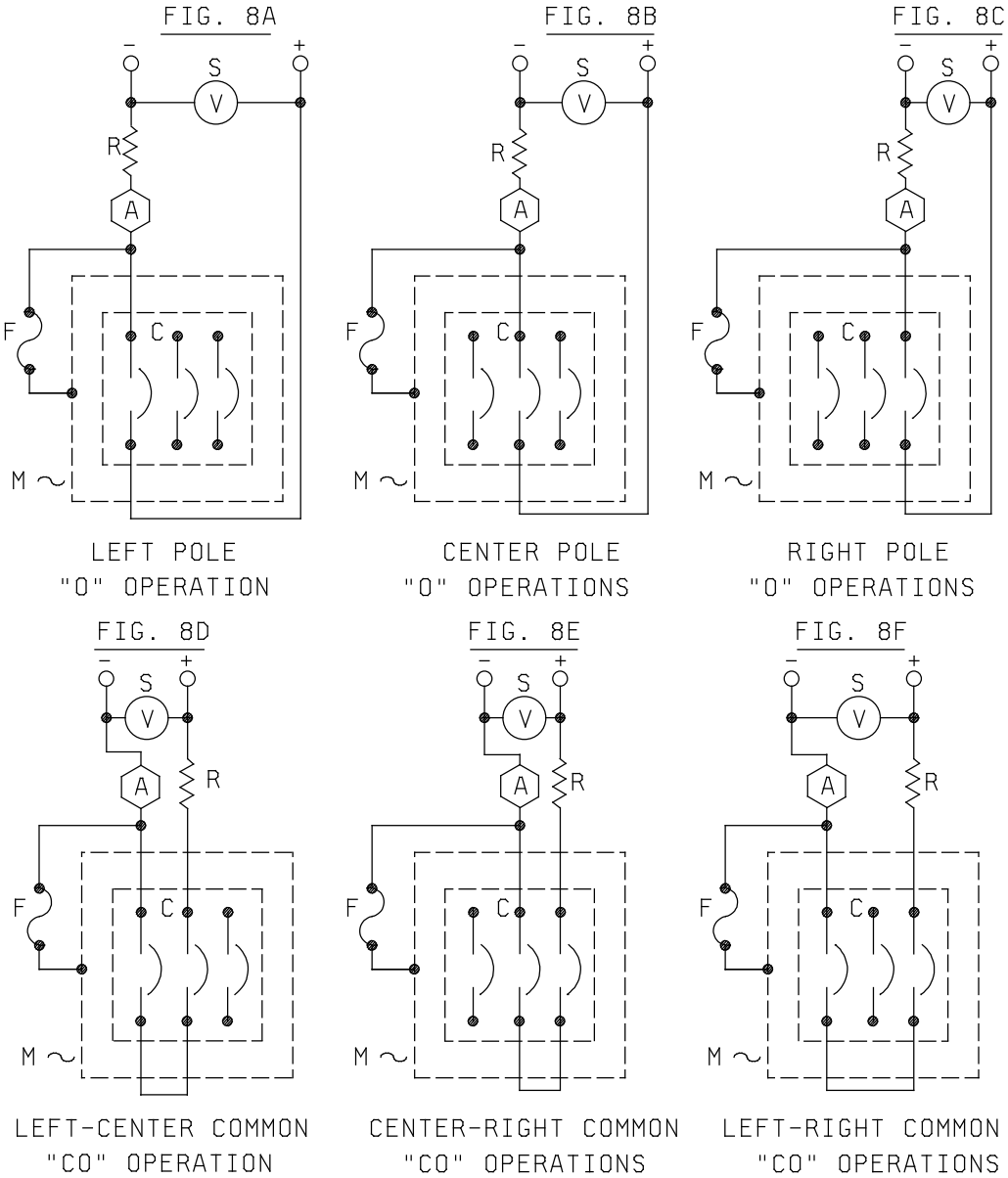

3-POLE CIRCUIT BREAKER TEST

NOTE: See figure 3 for legend and notes.

FIGURE 8. DC interrupting capacity test operations (duty cycle) and circuit wiring.

4.8.20 Panel seal (see 3.24) (when specified, see 3.1). Circuit breakers shall be secured by their normal mounting means to a suitable test jig. A suggested test jig is shown on figure 9. The test jig shall be immersed in a water-filled glass container containing a wetting agent, with the circuit breaker completely submerged. An air pressure of 15 pounds per square inch gage shall be applied to the test jig for approximately one-half hour. The circuit breaker and connection to the test jig shall be observed for any visible air bubbles indicative of leakage, either in the form of a continuous stream, or as bubbles emanating at regular intervals. The test shall then be repeated by applying air pressure in the opposite direction by reversing the cover.

Downloaded from http://www.everyspec.com

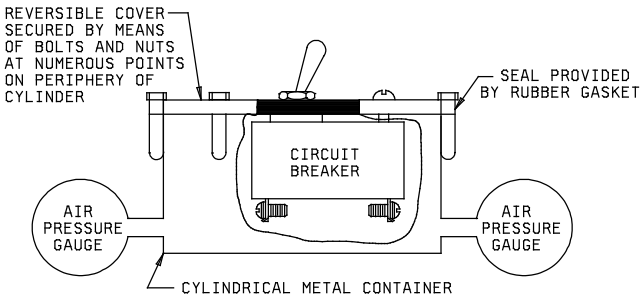

FIGURE 9. Suggested test jig for panel-seal test.

5. PACKAGING

5.1 Packaging. For acquisition purposes, the packaging requirements shall be as specified in the contract or order (see 6.2). When packaging of materiel is to be performed by DoD or in-house contractor personnel, these personnel need to contact the responsible packaging activity to ascertain packaging requirements. Packaging requirements are maintained by the Inventory Control Point's packaging activities within the Military Service or Defense Agency, or within the military service's system commands. Packaging data retrieval is available from the managing Military Department's or Defense Agency's automated packaging files, CD-ROM products, or by contacting the responsible packaging activity.

6. NOTES

(This section contains information of a general or explanatory nature that may be helpful, but is not mandatory.)

6.1 Intended use. Circuit breakers covered by specification sheet 1 through sheet 12 and sheet 20 through sheet 22 are intended primarily for use in the protection of electronic circuits, and should be used where moderate but unprolonged starting overloads may be expected and where the optional speed of response provided can be matched to the characteristics of the equipment to be protected. These circuit breakers are military unique in that they must operate satisfactorily under the following demanding conditions: Endurance testing of 10,000 mechanically performed make and break operations, 6,000 of them while energized to 100% of rated current, and they must meet stringent salt atmosphere (corrosion) testing. These circuit breakers should not be used in circuits, such as primary power circuits of electric systems, whose rupture current potential is greater than the interrupting capacity of the breaker, unless the circuit is properly protected by other means. Circuit breakers covered by specification sheet 13 through sheet 19 are physically larger than the other breakers covered by this specification; however, they offer higher current ratings and interrupt capacities, and may be used in primary power circuits providing their interrupting capacity is not exceeded. Many of the specification sheets now include high-inrush features that provide tolerance for short duration of high inrush or transient currents without decreasing steady-state protection.

Downloaded from http://www.everyspec.com

6.1.1 Derating. Circuit breakers should continuously carry normal load current; however, the value chosen should be the lowest rating that will not open the circuit breaker inadvertently. The following factors should be considered in selecting the proper current rating and time delay curve of a circuit breaker:

a. The average (steady state) conditions of the load.

b. The initial start-up current and duration of the current of the equipment to be protected.

c. Transient overloads and their duration.

d. Comparison of the time delay characteristics of the circuit breaker with the time current characteristics (including starting or overload surges) of the equipment, component, or wire.

6.2 Acquisition requirements. Acquisition documents must specify the following:

a. Title, number, and date of the specification.

b. Assist online database should be cited in the solicitation, and if required, the specific issue of individual documents referenced (see 2.2).

c. Packaging requirements (see 5.1).

6.3 Qualification. With respect to products requiring qualification, awards will be made only for products which are, at the time of award of contract, qualified for inclusion in Qualified Products List QPL No. 55629 whether or not such products have actually been so listed by that date. The attention of the contractors is called to these requirements, and manufacturers are urged to arrange to have the products that they propose to offer to the Federal Government tested for qualification in order that they may be eligible to be awarded contracts or orders for the products covered by this specification. Information pertaining to qualification of products may be obtained from the Defense Supply Center Columbus, ATTN: DLA Land and Maritime-VQH, 3990 E. Broad Street, Columbus, OH 43218, online at http://www.dscc.dla.mil/programs/qmlqpl/.

6.3.1 Provisions Governing Qualification. Copies of SD-6, “Provisions Governing Qualification” may be obtained upon application to Defense Printing Service Detachment Office, Standardization Document Order Desk, Building 4D (Customer Service), 700 Robbins Avenue, Philadelphia, PA 19111-5094.

6.4 Intermetallic contact. The finishing of metallic areas to be placed in intimate contact by assembly presents a special problem since intermetallic contact of dissimilar metals results in electrolytic couples that promote corrosion through galvanic action. To provide the required corrosion protection, intermetallic couples should be selected to meet the performance requirements of this specification.

6.5 Material and finishes. Pure tin finishes may result in tin whisker growth. The use of alloys with tin content greater than 97 percent, by mass, may exhibit tin whisker growth problems after manufacture. Tin whiskers may occur anytime from a day to years after manufacture and can develop under typical operating conditions, on products that use such materials. Conformal coatings applied over the top of a whisker-prone surface will not prevent the formation of tin whiskers. Alloys of 3 percent lead, by mass, have been shown to inhibit the growth of tin whiskers. For additional information on this matter, refer to ASTM-B545 (Standard Specification for Electrodeposited Coatings of Tin).

6.6 Definitions.

6.6.1 Auxiliary contacts (see 1.1 and 3.5.8.2). Auxiliary contacts are those mechanically interlocked with and operated by the main contacts of the circuit breaker and intended for use in monitoring circuits for signaling electrical interlocking or other purposes.

6.6.2 Line terminal (see 3.5.8.1). The terminal attached to the isolated stationary main contact of the circuit breaker with the breaker in the open or tripped position is considered the line terminal. If both main contacts of a circuit are isolated, only one terminal is to be designated the line terminal.

6.6.3 Multipole circuit breaker (see 3.5.4). A multipole circuit breaker has two or more poles controlled by a single actuating member.

6.6.4 Overtravel (see 4.8.9). Overtravel is the distance between the normal operating “on” and “off” positions of the actuating lever and the extreme positions to which the lever may be moved in either direction.

Downloaded from http://www.everyspec.com

6.6.5 Tripping time delay (see 3.5.3). Tripping time delay is the factor purposely designed into the tripping time of the circuit breaker.

6.6.6 Tripping time (see 3.9). Tripping time is the total interval of elapsed time from the instant of applying a given overcurrent to the circuit breaker to the completion of the interruption of the circuit.

6.5.7 Major design set. Limited to a basic circuit breaker design. Three major design sets are herein represented by specification sheets as follows:

a. One through six.

b. Seven through 12 and 20 through 22 (when the electrical operating mechanisms are identical).

c. Thirteen through 19.

6.5.8 Product line. A product line consists of all units of a type, series, style, or family of items.

6.6 Warning. Potentially hazardous situations are inherent in some of the test procedures specified in this specification. Precautions should therefore be taken to insure that test personnel are adequately protected and observe the necessary safety measures at all times.

6.7 High-inrush feature. This feature, also referred to as inertial delay or transient suppression, allows the breaker to pass short duration current pulses without nuisance tripping. The amplitude of these pulses may be many times the rated current of the circuit breaker.

6.8 Subject term (key word) listing.

Mixed pole
Multipole
Single pole

6.9 Environmentally preferable material. Environmentally preferable materials should be used to the maximum extent possible to meet the requirements of this specification. As of the dating of this document, the U.S. Environmentally Protection Agency (EPA) is focusing efforts on reducing 31 priority chemicals. The list of chemicals and additional information is available on their website at http://www.epa.gov/osw/hazard/wastemin/priority.htm. Included in the list of 31 priority chemicals are cadmium, lead, and mercury. Use of the materials on the list should be minimized or eliminated unless needed to meet the requirements specified herein (see section 3.

6.10 Changes from previous issue. The margins of this specification are marked with vertical lines to indicate where changes from the previous issue were made. This was done as a convenience only and the Government assumes no liability whatsoever for any inaccuracies in these notations. Bidders and contractors are cautioned to evaluate the requirements of this document based on the entire content irrespective of the marginal notations and relationship to the last previous issue.

Downloaded from http://www.everyspec.com

PROCEDURE FOR QUALIFICATION INSPECTION

A.1 SCOPE

A.1.1 Scope. This appendix details the procedure to submit samples, with related data, for qualification inspection of circuit breakers covered by this specification. The procedure shall be applicable to each circuit breaker configuration for which qualification is sought. The procedure for extending qualification of the required sample to other circuit breakers covered by this specification is also included.

A.2 APPLICABLE DOCUMENTS

This section is not applicable to this appendix.

A.3 SUBMISSION

A.3.1 Sample for specification sheet 1 through sheet 12 (tripping time delay A through delay S). Unless otherwise specified, 42 sample circuit breakers for each specification sheet for which qualification is sought, shall be submitted. When qualification is sought for two circuit breakers covered by two specification sheets that are identical, except that one covers circuit breakers with auxiliary contact terminals and the other covers circuit breakers without auxiliary contact terminals, the former shall be submitted. The 42 sample units shall be composed of six groups of seven units each (see A.3.3).

Two of the 7-unit groups shall be of the highest current rating and one 7-unit group shall be of the lowest current rating. The other three 7-unit groups may be composed of the highest or lowest current rating at the option of the contractor; however, the sample units within each 7-unit group shall be either all of the highest current rating or all of the lowest current rating. Each 7-unit group shall be composed of one each circuit breaker of the seven voltage-frequency-time delay combinations, A through G or K through S (see A.4.1). No failures will be allowed in the 42 sample units.

(Tripping time delay H, delay I, and delay J) When qualification already exists for characteristic A through characteristic G, six circuit breakers shall be submitted for qualification to characteristic H, characteristic I, and characteristic J. They shall consist of two circuit breakers (one in the minimum and one in the maximum current rating) in each of the three characteristics. The sample units shall be of the greatest number of poles for which qualification is sought. Circuit breakers qualified with auxiliary contacts will convey qualification to specification sheets without auxiliary contacts. Tests to be conducted are: Calibration, resistance or impedance (all units); high-temperature and low-temperature operation (2 units); vibration (2 units); and shock (2 units). No failures will be allowed in the six sample units.

(Tripping time delay T.) When qualification already exists for characteristic K through characteristic S, two circuit breakers shall be submitted for qualification to characteristic T. They shall consist of one in the minimum and one in the maximum current rating. The sample units shall be of the greatest number of poles for which qualification is sought. Circuit breakers qualified with auxiliary contacts will convey qualification to specification sheets without auxiliary contacts. Tests to be conducted are calibration and high-temperature and low-temperature. No failures will be allowed.

When qualification currently exist for specification sheet 1 through sheet 6 in tripping time delay A through delay G, qualification for the high-inrush feature (tripping time delay K through delay S) may be gained by submitting six circuit breakers represented by the lowest and highest current rating in each tripping time delay L, delay N, and delay R. Tests and sequence to be conducted are: Three high current sample units; shock, salt atmosphere, calibration (high inrush, 125 percent or 150 percent (see 3.1) and 1,000 percent). Three low current sample units; vibration, high and low temperature, and while being held at each temperature, perform high inrush, 125 percent or 150 percent (see 3.1) and 800 percent calibration.

Downloaded from http://www.everyspec.com

A.3.2 Sample for specification sheet 13 through sheet 19. Eighteen circuit breakers, as follows, shall give complete qualification for this major design set. Six circuit breakers in each frequency rating consisting of two breakers (one in the minimum current and one in the maximum current rating) in each of the tripping time delays. One half of the sample units shall be in the front mounted design with auxiliary contacts (7 three pole and 2 four pole units) and the other half to be in the 3-pole back mounted design. The sample units shall be divided into three subsets of dc, 60 Hz, and 400 Hz units, each subset represented by the longest, medium, and fastest time delays. NOTE: For multipole circuit breaker designs not assembled from single-pole devices, contact the qualifying activity for sampling plan. In the event less than complete qualification is desired, contact the qualifying activity.

A.3.3 Sample for specification sheet 20 through sheet 22. Qualification for MIL-PRF-55629/20 through MIL-PRF-55629/22 may be gained as defined in A.3.1 using the same criteria as for specification sheet 7 through sheet 12. When the operating mechanism, except for the handle and actuating linkage are identical in both mounting designs, the 42 sample units may be divided equally between the standard mounting style and the panel seal design, i.e., 21 sample units of MIL-PRF-55629/8 and 21 sample units of MIL-PRF-55629/20 successfully passing qualification will gain qualification for both MIL-PRF-55629/7, MIL-PRF-55629/8, and MIL-PRF-55629/20.

In the event qualification currently exists for specification sheet 7 through sheet 12 and is sought for specification sheet 20 through 22 and the operating mechanism, except for the handle and actuating linkage are identical to the previously qualified designs, one sample unit of the one, two, and three pole design shall be submitted with time delay L, delay N, and delay R represented by two poles each. The one and two pole sample units shall be the lowest current and the three pole the highest current rating for which qualification is sought.

Tests to be conducted on the sample units are: One pole and two pole sample units; shock, high-temperature and low-temperature, and while being held at each temperature, perform high inrush, 125 percent or 150 percent (see 3.1) and 800 percent calibration.

Three pole sample unit; vibration, high inrush, 125 percent or 150 percent (see 3.1) and 1,000 percent calibration.

All sample units; dielectric withstanding voltage, actuator strength, actuator operating force, and panel seal. No failures will be allowed in the three sample units.

A.3.4 Test data. When examinations and tests are to be performed at a Government laboratory prior to submission, all sample units shall be subjected to all of the examinations and tests indicated as nondestructive in table I. Each submission shall be accomplished by the test data obtained from these examinations and tests. The performance of the destructive tests by the contractor on a duplicate set of sample units is encouraged, although not required. All test data shall be submitted in duplicate.

A.3.5 Certification of material. When submitting samples for qualification, the contractor shall submit certification, in duplicate, that the materials used in his components are in accordance with the applicable specification requirements.

A.3.6 Description of items. The contractor shall submit a detailed description of the circuit breakers being submitted for qualification, including materials used for the envelope.

A.4 EXTENT OF QUALIFICATION

A.4.1 Extent of qualification. The current rating range included in the qualification of circuit breakers covered by any one specification sheet will be between the two extreme current ratings (highest and lowest) that pass the required qualification inspection. Qualification of circuit breakers with auxiliary contact terminals will also grant qualification to circuit breakers that are identical without auxiliary contact terminals. Qualification is extended to any combination of poles with current ratings between the two extremes qualified and in the time delay curves qualified. For specification sheet 1 through sheet 6, qualification to time delay K, delay L, delay M, delay N, delay P, delay R, and delay S will also grant qualification to time delay A through delay G.

Downloaded from http://www.everyspec.com

Custodians:
Army - CR
Navy - EC
Air Force - 85
DLA - CC

Review activity:
Army - EA

Preparing activity:
Army - CR

Agent:
DLA - CC

(Project 5925-2009-030)

NOTE: the activities listed above were interested in this document as of the date of this document. Since organizations and responsibilities can change, you should verify the currency of the information above using the ASSIST Online database at https://assist.daps.dla.mil.