Downloaded from http://www.everyspec.com

INCH-POUND

MIL-PRF-55310D
25 March 1998

SUPERSEDING
MIL-O-55310C
15 March 1994

PERFORMANCE SPECIFICATION

OSCILLATOR, CRYSTAL CONTROLLED, GENERAL SPECIFICATION FOR

This specification is approved for use by all Departments and Agencies of the Department of Defense.

1. SCOPE

1.1 Scope. This specification covers the general requirements for quartz crystal oscillators used in electronic equipment.

1.2 Classification.

1.2.1 Part or Identifying Number (PIN). The PIN consists of the letter "M", the basic number of the specification sheet, the dash number, and alphanumeric designators. An example of a PIN follows:

M55310/01-	B	01	A	32K76800
Designator and specification sheet number	Product level (see 1.2.1.1)	Dash number (see 1.2.1.2)	Temperature range (see 1.2.1.3)	Specified nominal frequency (see 1.2.1.4)

1.2.1.1 Product level. The product level is identified by a single letter C, B or S. Product level S covers high reliability space applications, level B covers high reliability applications, and level C covers general purpose applications.

1.2.1.2 Dash number. The dash number uniquely identifies the crystal oscillator.

1.2.1.3 Temperature range. The temperature range is identified by a single letter as follows:

A — -55°C to +125°C
B — -55°C to +105°C
C — -20°C to +70°C
D — -55°C to +85°C
E — -40°C to +85°C
J — Other (see 3.1)

Beneficial comments (recommendations, additions, deletions) and any pertinent data which may be of use in improving this document should be addressed to U.S. Army CECOM, ATTN: AMSEL-LC-LEO-E-EP, Fort Monmouth, NJ 07703-5023, by using the Standardization Document Improvement Proposal (DD Form 1426) appearing at the end of this document or by letter.

AMSC N/A FSC 5955

DISTRIBUTION STATEMENT A. Approved for public release; distribution is unlimited.

Downloaded from http://www.everyspec.com

1.2.1.4 Specified nominal frequency. The specified nominal frequency expressed in hertz (Hz) is identified by a fixed field of eight characters consisting of seven digits and a letter (H, K, M or G) representing both the decimal point and the appropriate multiplier as follows:

a. Greater than or equal to .01 Hz and less than 1,000 Hz, the letter "H" is used to represent the decimal point and multiplier.

b. Greater than or equal to 1,000 Hz, but less than 1 megahertz (MHz), the letter "K" is used to represent the decimal point and multiplier.

c. Greater than or equal to 1 MHz, the letter "M" is used to represent the decimal point and multiplier.

d. Greater than or equal to 1 gigahertz (GHz), the letter “G” is used to represent the decimal point and multiplier.

All digits preceding and following the letter (H, K, M or G) of the group represent significant figures.

The following are examples of using the eight characters in constructing the specified frequency.

Designation			Frequency			
H0100000	to	H9999999	.01	to	.9999999	Hz, inclusive
1H000000	to	9H999999	1.0	to	9.999999	Hz, inclusive
10H00000	to	99H99999	10	to	99.99999	Hz, inclusive
100H0000	to	999H9999	100	to	999.9999	Hz, inclusive
1K000000	to	9K999999	1	to	9.999999	kilohertz (kHz), inclusive
10K00000	to	99K99999	10	to	99.99999	kHz, inclusive
100K0000	to	999K9999	100	to	999.9999	kiloHz, inclusive
1M000000	to	9M999999	1	to	9.999999	MHz, inclusive
10M00000	to	99M99999	10	to	99.99999	MHz, inclusive
100M0000	to	999M9999	100	to	999.9999	MHz, inclusive
1G000000	to	9G999999	1	to	9.999999	GHz, inclusive
10G00000	to	99G00000	10	to	99.99999	GHz, inclusive
100G0000	to	999G0000	100	to	999.9999	GHz, inclusive

1.2.2 Types. The oscillators types are identified by a single number as follows:

Type 1 - Crystal Oscillators (XO) (see 6.4.5).
Type 2 - Voltage Controlled Crystal Oscillators (VCXO) (see 6.4.45).
Type 3 - Temperature Compensated Crystal Oscillators (TCXO) (see 6.4.41).
Type 4 - Oven-Controlled Crystal Oscillators (OCXO) (see 6.4.31).
Type 5 - Temperature Compensated/Voltage Controlled Crystal Oscillators (TCVCXO) (see 6.4.42).
Type 6 - Oven-Controlled/Voltage Controlled Crystal Oscillator (OCVCXO) (see 6.4.32).
Type 7 - Microcomputer Compensated Crystal Oscillator (MCXO) (see 6.4.28).
Type 8 - Rubidium-Crystal Oscillators (RbXO) (see 6.4.38).

1.2.3 Classes. Oscillators covered by this specification are identified in technology classes as follows:

Class 1 - Oscillators using discrete technology. This technology uses exclusively discrete type electronic parts (including surface mount devices) assembled and interconnected on a printed circuit board or an insulating substrate.

Class 2 - Oscillators using microelectronic (hybrid) technology. This technology uses microelectronic circuit elements electrically and mechanically interconnected on an insulating substrate upon which resistors, capacitors, or conductors have been deposited, and used in a package that will be backfilled with an inert gas.

Class 3 - Oscillators using mixed technology (i.e., a combination of discrete technology and microelectronic technology).

Downloaded from http://www.everyspec.com

2. APPLICABLE DOCUMENTS

2.1 General. The documents listed in this section are specified in sections 3 and 4 of this specification. This section does not include documents cited in other sections of this specification or recommended for additional information or as examples. While every effort has been made to ensure the completeness of this list, document users are cautioned that they must meet all specified requirements documents cited in sections 3 and 4 of this specification, whether or not they are listed.

2.2 Government documents.

2.2.1 Specifications, standards, and handbooks. The following specifications, standards, and handbooks form a part of this document to the extent specified herein. Unless otherwise specified, the issues of these documents are those listed in the issue of the Department of Defense Index of Specifications and Standards (DODISS) and supplement thereto, cited in the solicitation (see 6.2).

SPECIFICATION

DEPARTMENT OF DEFENSE

MIL-PRF-38534 - Hybrid Microcircuits, General Specification for.

(See supplement 1 for list of associated specifications.)

STANDARDS

DEPARTMENT OF DEFENSE

MIL-STD-202 - Test Methods for Electronic and Electrical Component Parts.
MIL-STD-790 - Standard Practice for Established Reliability and High Reliability Qualified Products List (QPL) Systems for Electrical, Electronic, and Fiber Optic Parts Specifications.
MIL-STD-810 - Environmental Test Methods and Engineering Guidelines.
MIL-STD-883 - Test Method Standard Microcircuits.
MIL-STD-1285 - Marking of Electrical and Electronic Parts.

(Unless otherwise indicated, copies of the above specifications, standards, and handbooks are available from the Defense Automated Printing Service, Building 4D (DPM-DODSSP), 700 Robbins Avenue, Philadelphia, PA 19111-5094.)

2.2.2 Other Government documents, drawings, and publications. The following other Government documents, drawings, and publications form a part of this document to the extent specified herein. Unless otherwise specified, the issues are those cited in the solicitation.

National Institute of Standards and Technology (NIST) Technical Note 1337 - Characterization of Clocks and Oscillators.

(Copies of other Government documents required by contractors in connection with specific acquisition functions should be obtained as directed by the contracting activity.)

Downloaded from http://www.everyspec.com

2.3 Non-Government publications. The following documents form a part of this document to the extent specified herein. Unless otherwise specified, the issues of the documents which are DoD adopted are those listed in the issue of the DODISS cited in the solicitation. Unless otherwise specified, the issues of documents not listed in the DODISS are the issues of the documents cited in the solicitation (see 6.2).

AMERICAN SOCIETY FOR TESTING AND MATERIALS (ASTM)

ASTM A-698 - Standard Method of Test for Magnetic Shield Efficiency in Attenuating Alternating Magnetic Fields.

(Application for copies should be addressed to the American Society for Testing Materials, 1916 Race Street, Philadelphia, PA 19103).

ELECTRONIC INDUSTRIES ASSOCIATION (EIA)

EIA-557 - Statistical Process Control Systems.

(Application for copies should be addressed to the Electronic Industries Association, 2500 Wilson Boulevard, Arlington VA 22201-3834)

(Non-Government standards and other publications are normally available from the organizations that prepare or distribute the documents. These documents also may be available in or through libraries or other informational services.)

2.4 Order of precedence. In the event of a conflict between the text of this document and the references cited herein (except for related associated specifications, specification sheets, or MS sheets), the text of this document takes precedence. Nothing in this document, however, supersedes applicable laws and regulations unless a specific exemption has been obtained.

3. REQUIREMENTS

3.1 Specification sheets. The individual item requirements shall be as specified herein and in accordance with the applicable specification sheet. In the event of any conflict between the requirements of this specification and the specification sheet, the latter shall govern.

3.2 Qualification. Oscillators furnished under this specification shall be products that are authorized by the qualifying activity for listing on the applicable QPL before contract award (see 4.6 and 6.3).

3.3 QPL system. The manufacturer shall establish and maintain a QPL system for parts covered by this specification. Requirements for this system are specified in MIL-STD-790. For Class 2 oscillators, the manufacturer's QPL system shall also address the requirements of appendix A . The qualifying activity for this specification may use pre-existing certification of the manufacturing facility in accordance with MIL-PRF-38534 as an alternative to the appendix A requirements. The manufacturer shall also establish a component evaluations system as part of the MIL-STD-790 overall system in accordance with appendix B.

3.3.1 Statistical Process Control (SPC) system. As part of the overall MIL-STD-790 QPL system, the manufacturer shall establish an SPC system that meets the requirements of EIA-557.

3.3.2 Electrostatic discharge (ESD) control system. As part of the overall MIL-STD-790 QPL system, the manufacturer shall establish and maintain an ESD control system. As a minimum, this program shall address the identification of ESD sensitive (ESDS) sub-components and end items, facilities, training, design protection, handling procedures, marking, cleaning, packaging, and verification.

Downloaded from http://www.everyspec.com

3.4 Materials. The materials used in construction of crystal oscillators shall be nonnutrient to fungus and shall not blister, outgas, soften, flow, or show defects that adversely affect storage, operation at rated conditions, or environmental capabilities. When materials are not specified, materials shall be used which enable the crystal oscillators to meet the performance requirements of this specification. Acceptance or approval of any constituent material shall not be construed as a guarantee of the acceptance of the finished product. Oscillators shall also meet the following material performance requirements:

a. Polymeric materials may not exceed their cure temperature after final seal.

b. For Class 2 oscillators, all adhesive polymeric materials shall be capable of meeting the performance requirements of MIL-STD-883, method 5011, and shall be approved by the qualifying activity.

3.5 Interface and physical dimension requirements. Oscillators shall meet the interface and physical dimensions specified (see 3.1).

3.5.1 Package. The outline dimensions of the package shall be as specified (see 3.1). In addition, the oscillator shall meet the following requirements:

3.5.1.1 Class 1. Crystal oscillators supplied under this specification shall be sealed in glass, metal, or ceramic (or combination of these) packages. O-ring seals, when applicable, shall be permitted at an access hole in the package to allow frequency adjustment. Adhesive or polymeric material shall not be used for package cover/lid attachment, seal or repair.

3.5.1.2 Class 2. Oscillators shall be hermetically sealed in glass, metal, or ceramic (or combinations of these) packages. No adhesive or polymeric materials shall be used for package lid attachment (or seal). Flux shall not be used in the final sealing process. For final lid seal using a welding process, sufficient distance shall be maintained between the lid seal and any glass-to-metal seal to preclude damage or degradation of the seal.

3.5.1.3 Internal water vapor content. For Class 2 oscillators, the internal water vapor content shall not exceed 5,000 ppm at +100°C, when tested in accordance with 4.8.56. Polymer impregnations or secondary seal (backfill, coating, or other uses of organic or polymeric materials to effect, improve the seal) of the oscillator package shall not be permitted (see 6.3.1).

NOTE: Packages containing beryllia shall not be ground, sandblasted, machined, or have other operations performed on them which will produce beryllia or beryllium dust. Furthermore, beryllium oxide packages shall not be placed in acids that will produce fumes containing beryllium.

3.5.2 Metals. Metal surfaces shall be corrosion resistant or shall be plated or treated to resist corrosion and shall meet the requirements specified in 3.5.3.

3.5.3 Package and lead materials and finishes.

3.5.3.1 Lead or terminal material. A lead or terminal material shall be used that enables the oscillator to meet all of the performance requirements of this specification. For further guidance on lead and terminal materials to meet the performance requirements of this specification, see 6.5.1.

3.5.3.2 Lead finish. The finish on all external leads or terminal shall conform to one of the following finishes and as specified in 3.1. (NOTE: Pure tin finish shall not be used for any internal or external package surface or as a lead finish. In addition, pure tin plating shall not be used as an undercoat.):

a. Hot solder dip.

b. Tin-lead plate.

c. Gold plate. (Gold plating shall have a nickel underplate.)

d. NOTE: For further guidance on lead finishes see 6.5.2.

Downloaded from http://www.everyspec.com

3.5.3.3 Solder dip (retinning) leads. The manufacturer may solder dip/retin the leads of the product supplied to this specification provided the solder dip/retin process has been approved by the qualifying activity.

3.5.3.3.1 Qualifying activity approval. Approval of the solder dip process will be based on one of the following options:

a. When the original lead finish qualified was hot solder dip in accordance with 3.5.3.2a. The manufacturer shall use the same solder dip process for retinning as is used in the original manufacture of the product.

b. When the lead originally qualified was not hot solder dip as prescribed in 3.5.3.3.1a, approval for the process to be used for solder dip shall be based on the following test procedure:

(1) Six samples of any oscillator of an individual specification sheet and specific lead finish shall be subjected to the manufacturer's solder dip process. Following the test, the oscillators shall be subjected to the subgroup 1 and subgroup 2 tests of the group A inspection. No defects are allowed.

(2) Two of the six samples shall be subjected to the solderability test. No defects are allowed.

(3) The remaining four samples are subjected to the resistance to solder heat test and then to the subgroup 1 and subgroup 2 tests of the group A inspection. No defects are allowed.

(4) In addition, the hot solder dip process must meet the requirements of 3.5.3.2a.

3.5.3.3.2 Solder dip/retinning options. The manufacturer may solder dip/retin as follows:

a. After the screening tests specified in 4.4, oscillators shall be subjected to remaining group A inspections.

b. As a corrective action, if the lot fails the group A solderability test.

c. After the group A inspection has been completed. Following the solder dip/retinning process, the group A inspection tests for frequency and output waveform at room temperature shall be repeated on the lot.

3.5.4 Package body finish. External metallic package elements other than leads or terminals (e.g., lids, covers, bases, seal rings, etc.) shall meet the applicable corrosion resistance and environmental requirements and shall be finished so that they meet those requirements using finishes conforming to one or more of the following as applicable:

a. Hot solder dip.

b. Tin-lead plate.

c. Gold plate.

d. Nickel plate.

NOTE: Pure tin finish shall not be used on any internal or external package surface or as a lead finish. In addition, tin plating shall not be used as an undercoat.

For further guidance on these package body finishes, see 6.5.3.

3.5.5 Weight (when specified, see 3.1). The weight of the crystal oscillator shall be as specified.

3.5.6 Overall frequency accuracy (see 6.4.33) (when specified, see 3.1). The crystal oscillator shall be designed to meet the overall frequency accuracy specified. Certification shall be provided to the qualifying activity indicating that all contributing sources of frequency error have been considered in the design, and that a worst case frequency error analysis was performed.

Downloaded from http://www.everyspec.com

3.5.7 Calibration. The crystal oscillator shall be designed for the method of calibration specified (see 3.1) in accordance with the following.

3.5.7.1 Manufacturer-calibrated. There shall be no provision for frequency adjustment.

3.5.7.2 Manufacturer and user frequency offset calibrated (see 6.4.14). Frequency adjustment to marked frequency offset shall be at specified reference temperature and nominal supply voltage and load (see 3.7.2).

3.5.7.3 Manufacturer and user nominal frequency calibrated. Frequency adjustable to nominal frequency shall be at specified reference temperature and nominal supply voltage and load.

3.5.8 Load test circuit (when specified, see 3.1). The crystal oscillator shall be designed to operate with the specified load test circuit under the conditions specified.

3.5.9 Design for nuclear survivability (when specified, see 3.1). Parts, materials, processes, design details, and operating principles shall be selected to ensure nuclear survivability over the range of levels specified (see 3.1). Analysis of the design shall be made and documented to indicate the most probable modes of degradation and malfunction, and to support its effectiveness in achieving radiation hardness. Certification shall be provided to the qualifying activity that the oscillator has been designed for nuclear survivability, and that an analysis has been performed which indicates that the oscillator has no anomalous behavior and will not fail to function in its intended mode (see 3.6.47).

3.6 Performance.

3.6.1 Seal. When tested as specified in 4.8.2, the following requirements shall be met, as applicable.

3.6.1.1 O-ring-solder seal (nonhermetic). Oscillators employing solder seal or combination O-ring-solder seal shall be tested as specified in 4.8.2.1. Leakers will be identified by a single bubble or a stream of bubbles. Oscillators from which a single bubble is observed are considered rejects.

3.6.1.2 Hermetic seal. Oscillators employing hermetic seal shall be tested as specified in 4.8.2.2 for class of oscillator and shall meet the requirements as specified, see 3.1.

3.6.1.3 High vacuum seal (type 4 and type 6) (when specified, see 3.1) (see 6.4.20). Oscillators employing a high vacuum seal shall have a leakage rate not to exceed the value specified. When specified (see 3.1), the oscillator shall be final baked and sealed at a pressure not to exceed the value specified (see 4.8.2.3).

3.6.2 Supply voltage.

3.6.2.1 Oscillator supply voltage. When measured as specified in 4.8.3.1, the oscillator supply voltage magnitude, tolerance, polarity, peak-to-peak ripple frequency, ripple frequency, regulation, noise, and ramp rate (turn-on) shall be as specified (see 3.1).

3.6.2.2 Oven supply voltage (type 4 and type 6). When measured as specified in 4.8.3.2, the oven supply voltage magnitude, tolerance, polarity, peak-to-peak ripple frequency, ripple frequency, regulation, and noise shall be as specified (see 3.1).

3.6.2.3 Modulation-control input voltage (type 2, type 5, and type 6). When measured as specified in 4.8.3.3, the oscillator modulation voltage and magnitude, tolerance, polarity, frequency limits, dc reference level, dc control voltage magnitude, polarity, range, slew rate, peak-to-peak ripple frequency, ripple frequency, regulation, and noise shall be as specified (see 3.1).

3.6.3 Overvoltage survivability. When tested as specified in 4.8.4, the application of an overvoltage at the supply terminals shall not impair performance of the oscillator.

Downloaded from http://www.everyspec.com

3.6.4 Input current-power.

3.6.4.1 Oscillator input current-power. When measured as specified in 4.8.5.1, the oscillator input current-power shall not exceed the value specified (see 3.1).

3.6.4.2 Oven input current-power (type 4 and type 6). When measured as specified in 4.8.5.2, the oven peak and steady-state (after stabilization) input current-power shall not exceed the value specified (see 3.1).

3.6.4.3 Syntonization energy (type 8) (see 6.4.40). When measured as specified in 4.8.5.3, the energy required by the rubidium reference to syntonize the crystal oscillator to within the specified frequency tolerance shall not exceed the value specified (see 3.1).

3.6.5 Initial accuracy at reference temperature (see 6.4.22) (when specified, see 3.1). When tested at the specified reference temperature, as specified in 4.8.6, the output frequency referenced to nominal frequency shall not exceed the limits specified. Nonfrequency-adjustable oscillators shall be capable of meeting this requirement within the specified period following shipment (see 3.1). Support Information shall be provided to the qualifying activity showing that nonfrequency-adjustable oscillators are capable of meeting this requirement within the specified period following shipment.

3.6.6 Frequency adjustment (frequency-adjustable oscillators).

3.6.6.1 Mechanical-frequency-adjustment (when applicable) (see 6.4.27). When tested as specified in 4.8.7.1, the mechanical-frequency-adjustment range, referenced to nominal frequency or marked frequency offset, as applicable (see 3.5.7), and resolution shall be as specified. For an external-frequency-adjustment oscillator (see 6.4.9) the external-frequency-adjustment element, e.g., potentiometer, shall be as specified (see 3.1).

3.6.6.2 Electrical-frequency-control (when applicable) (see 6.4.8). When tested as specified in 4.8.7.2, the electrical-frequency-control range corresponding to the specified input control voltage shall be as specified (see 3.1).

3.6.7 Frequency warm-up (see 6.4.18) (when specified, see 3.1). When measured as specified in 4.8.8, the time for the output frequency, referenced to final frequency as specified, to stabilize within the specified frequency tolerance shall not exceed the value specified.

3.6.8 Initial frequency aging (type 4 and type 6) (see 6.4.23) (when specified, see 3.1). When tested as specified in 4.8.9, the initial frequency aging shall not exceed the specified value.

3.6.9 Initial frequency-temperature accuracy (see 6.4.24).

3.6.9.1 Initial frequency-temperature accuracy (one-half temperature cycle) (when not specified by 3.6.9.2, 3.6.9.3 or 3.6.9.4). When measured as specified in 4.8.10.1, the frequency-temperature accuracy shall not exceed the limits specified. Nonfrequency-adjustable oscillators shall be capable of meeting this requirement within the specified period following shipment (see 3.1). Support information shall be provided to the qualifying activity showing that nonfrequency-adjustable oscillators are capable of meeting this requirement within the specified period following shipment.

3.6.9.2 Initial frequency-temperature accuracy including hysteresis (see 6.4.21) (when specified, see 3.1). When measured as specified in 4.8.10.2, the frequency-temperature accuracy including hysteresis shall not exceed the limits specified. Nonfrequency-adjustable oscillators shall be capable of meeting this requirement within the specified period following shipment (see 3.1). Support information shall be provided to the qualifying activity showing that nonfrequency-adjustable oscillators are capable of meeting this requirement within the specified period following shipment.

3.6.9.3 Initial frequency-temperature accuracy including trim effect (one-half temperature cycle) (see 6.4.44) (when specified, see 3.1). When measured as specified in 4.8.10.3, the frequency-temperature accuracy including trim effect for a specified temperature range and frequency-adjustment range shall not exceed the limits specified.

Downloaded from http://www.everyspec.com

3.6.9.4 Initial frequency-temperature accuracy including hysteresis and trim effect (see 6.4.21 and 6.4.44) (when specified, see 3.1). When measured as specified in 4.8.10.4, the frequency-temperature accuracy including hysteresis and trim effect for a specified temperature range and frequency-adjustment range shall not exceed the limits specified.

3.6.10 Frequency-temperature stability (see 6.4.16) (when specified in lieu of 3.6.9, see 3.1).

3.6.10.1 Frequency-temperature stability (one-half temperature cycle) (when specified, see 3.1). When measured as specified in 4.8.11.1, the frequency-temperature stability shall not exceed the limits specified. If specified, a frequency versus temperature curve of the oscillator shall be generated in the format specified. This curve shall be supplied, annotated by oscillator serial number, for each oscillator produced.

3.6.10.2 Frequency-temperature stability including hysteresis (when specified, see 3.1). When measured as specified in 4.8.11.2, the frequency-temperature stability including hysteresis shall not exceed the limits specified. If specified, a frequency versus temperature curve of the oscillator shall be generated in the format specified. This curve shall be supplied, annotated by oscillator serial number, for each oscillator produced.

3.6.10.3 Frequency-temperature stability including trim effect (one-half temperature cycle) (when specified, see 3.1). When measured as specified in 4.8.11.3, the frequency temperature stability including trim effect for a specified temperature range and frequency-adjustment range shall not exceed the limits specified. If specified, a frequency versus temperature curve of the oscillator shall be generated in the format specified. This curve shall be supplied, annotated by oscillator serial number, for each oscillator produced.

3.6.10.4 Frequency-temperature stability including hysteresis and trim effect (when specified, see 3.1). When measured as specified in 4.8.11.4, the frequency temperature stability including hysteresis and trim effect for a specified temperature range and frequency-adjustment range shall not exceed the limits specified. If specified, a frequency versus temperature curve of the oscillator shall be generated in the format specified. This curve shall be supplied, annotated by oscillator serial number, for each oscillator produced.

3.6.11 Frequency-temperature slope at reference temperature (see 6.4.15) (when specified, see 3.1). When measured as specified in 4.8.12, the frequency temperature slope at the reference temperature shall not exceed the limits specified.

3.6.12 Frequency-thermal transient stability (when specified, see 3.1). When measured as specified in 4.8.13, the thermal response time and overshoot or undershoot of the transient frequency excursion resulting from a specified temperature change shall not exceed the limits specified.

3.6.13 Frequency-voltage tolerance (see 6.4.17). When measured as specified in 4.8.14, the frequency-voltage tolerance referenced to output frequency at nominal supply voltage shall not exceed the limits specified (see 3.1).

3.6.14 Frequency-load tolerance (see 6.4.13) (when specified, see 3.1). When measured as specified in 4.8.15, the frequency-load tolerance referenced to output frequency at nominal load shall not exceed the limits specified.

3.6.15 Retrace (see 6.4.36) (when specified, see 3.1). When tested as specified in 4.8.16, the frequency retrace, referenced to an initial output frequency, shall not exceed the limits specified.

Downloaded from http://www.everyspec.com

3.6.16 Short-term stability (see 6.4.1, 6.4.2, 6.4.3, 6.4.34, and 6.4.35,) (when specified, see 3.1).

3.6.16.1 Phase noise, steady-state (when specified, see 3.1). When measured as specified in 4.8.17.1, the phase noise, $\mathcal{L}(f)$, under steady-state (quiescent) conditions shall not exceed the values bounded by straight line segments drawn on log-log axis through specified points.

3.6.16.2 Phase noise, random vibration (when specified, see 3.1). When measured as specified in 4.8.17.2, the phase noise, $\mathcal{L}(f)$, shall not exceed the values specified for the random vibration levels and spectra specified.

3.6.16.3 Phase noise, acoustic (when specified, see 3.1). When measured as specified in 4.8.17.3, the phase noise, $\mathcal{L}(f)$, shall not exceed the values specified for the acoustic intensities and spectra specified.

3.6.16.4 Amplitude noise (when specified, see 3.1). When measured as specified in 4.8.17.4, the amplitude noise, $S_{\epsilon}(f)$, shall not exceed the values bounded by straight line segments drawn on log-log axes through the specified points.

3.6.16.5 Allan deviation (when specified, see 3.1). When measured as specified in 4.8.17.5, the Allan deviation shall not exceed the values bounded by straight line segments drawn on log-log axes through the specified points.

3.6.17 Acceleration sensitivity (see 6.4.1) (when specified, see 3.1).

3.6.17.1 Acceleration sensitivity, steady-state (when specified, see 3.1). When tested as specified in 4.8.18.1, the frequency change per unit of acceleration shall not exceed the value specified.

3.6.17.2 Acceleration sensitivity, 2 g tip-over (when specified, see 3.1). When tested as specified in 4.8.18.2, the acceleration sensitivity due to 2 g tip-over shall not exceed the value specified. If specified, the maximum acceleration sensitivity shall be in the direction specified. If specified, the direction of the acceleration sensitivity vector (expressed in terms of its three unit vectors) shall be recorded and supplied with a serial number for each oscillator produced.

3.6.17.3 Acceleration sensitivity, vibration (when specified, see 3.1). When tested as specified in 4.8.18.3, the low level acceleration sensitivity shall not exceed the value specified for the maximum acceleration specified. If specified, the maximum acceleration sensitivity shall be in the direction specified. If specified, the direction of the acceleration sensitivity vector (expressed in terms of its three unit vectors) shall be recorded and supplied with a serial number for each oscillator produced.

3.6.18 Magnetic field sensitivity (when specified, see 3.1) (see 6.4.26).

3.6.18.1 Magnetic field sensitivity, dc. When tested in accordance with 4.8.19.1, the oscillator's dc magnetic field sensitivity shall not exceed the value specified for the field strength specified. If specified, the maximum magnetic field sensitivity shall be along the direction specified.

3.6.18.2 Magnetic field sensitivity, ac. When tested in accordance with 4.8.19.2, the oscillator's alternating magnetic field sensitivity shall not exceed the value specified for the field strength and frequencies specified. If specified, the maximum magnetic field sensitivity shall be along the axis specified.

3.6.19 Output waveform. When tested as specified in 4.8.20, the type of output waveform from the oscillator shall be as specified (see 3.1).

3.6.20 Output voltage-power (see 4.8.21).

3.6.20.1 Output voltage. When measured as specified in 4.8.21.1, the output voltage shall not exceed the limits specified (see 3.1).

3.6.20.2 Output power (sinusoidal waveform) (when specified, see 3.1). When measured as specified in 4.8.21.2, the output power shall not exceed the limits specified.

3.6.20.3 Output logic voltage levels (square wave output waveform). When measured as specified in 4.8.21.3, the output logic voltage levels for TTL and CMOS compatible oscillators shall not exceed the

Downloaded from http://www.everyspec.com

limits specified in table I, unless otherwise specified. For ECL and other logic families, output logic voltage levels shall not exceed the limits specified (see 3.1).

TABLE I. Output logic voltage levels.

Compatible logic	Minimum "1" level	Maximum "0" level
TTL	2.40 volts	0.50 volt
CMOS/HCMOS	0.9 V_{DD}	0.1 V_{DD}

3.6.21 Rise and fall times (see 6.4.37 and 6.4.10) (square wave output waveform). When tested as specified in 4.8.22, the rise and fall times shall not exceed the limits specified at the measurement levels specified (see 3.1).

3.6.22 Duty cycle (see 6.4.7) (square wave output waveform). When tested as specified in 4.8.23, the duty cycle of the output waveform shall not exceed the limits specified at the measurement levels specified (see 3.1).

3.6.23 Harmonic and subharmonic distortion (see 6.4.19) (when specified, see 3.1). When measured as specified in 4.8.24, the harmonic and subharmonic distortion shall not exceed the values specified within the bandwidth as specified.

3.6.24 Spurious response (see 6.4.39) (when specified, see 3.1). When measured as specified in 4.8.25, the nonharmonically related spurious responses shall be at least the specified number of decibels below the main response within the bandwidth as specified.

3.6.25 Output impedance (when specified, see 3.1). When tested as specified in 4.8.26, the output impedance of the oscillator shall not exceed the limits specified.

3.6.26 Re-entrant isolation (multi-output oscillators) (when specified, see 3.1). When measured as specified in 4.8.27, the re-entrant isolation between output ports of the multi-output oscillator at specified signal frequency and level shall be as specified.

3.6.27 Output suppression (gated oscillator) (when specified, see 3.1). When measured as specified in 4.8.28, the reduction in output level when other output stages are cutoff by the specified gating signal shall be as specified.

3.6.28 Startup time (when specified, see 3.1). When measured as specified in 4.8.29, the time interval for the oscillator output to achieve continuous waveform at 90 percent of final amplitude following application of power, unless otherwise specified, shall not exceed the value specified.

3.6.29 Modulation-control input impedance (type 2, type 5, and type 6). When tested as specified in 4.8.30, the modulation-control input impedance across the modulation-control input terminals shall not exceed the limits specified for the range of input signal frequency specified (see 3.1).

3.6.30 Frequency deviation (type 2, type 5, and type 6) (see 4.8.31).

3.6.30.1 Total frequency deviation, dc control (see 6.4.43) (when not specified by 3.6.30.2). When measured as specified in 4.8.31.1, the total frequency deviation of the output signal from center frequency for the specified dc control voltage range shall exceed the limits specified (see 3.1).

3.6.30.2 Total frequency deviation, modulation (when specified, see 3.1). When measured as specified in 4.8.31.2, the total frequency deviation of the output signal from center frequency for the specified peak-to-peak modulation voltage and reference frequency shall exceed the limits specified (see 3.1).

3.6.30.3 Deviation (slope) sensitivity (when specified, see 3.1). When measured as specified in 4.8.31.3, the frequency deviation (slope) sensitivity defined by the slope of the output frequency-control voltage transfer characteristic shall not exceed the limits specified.

Downloaded from http://www.everyspec.com

3.6.30.4 Deviation slope polarity. When tested as specified in 4.8.31.4, the frequency deviation slope polarity corresponding to a positive increase of control voltage shall be as specified (see 3.1).

3.6.30.5 Deviation linearity (see 6.4.6) (when not specified by 3.6.30.6). When tested as specified in 4.8.31.5, the deviation linearity of the output frequency control voltage transfer characteristic shall not exceed the value specified (see 3.1).

3.6.30.6 Modulation distortion (see 6.4.29) (when specified, see 3.1). When measured as specified in 4.8.31.6, the modulation distortion resulting from nonlinearity of the output frequency-modulation voltage transfer characteristic shall not exceed the value specified for the modulation voltage magnitude and frequency specified (see 3.1).

3.6.30.7 Modulation frequency response (see 6.4.30) (when specified, see 3.1). When tested as specified in 4.8.31.7, the modulation frequency response shall be flat within the limits specified over the frequency range specified (see 3.1).

3.6.31 Accumulated time error (when specified, see 3.1). When tested as specified in 4.8.32, the time integral of fractional frequency change for a specified time interval resulting from specified time variant conditions (temperature, acceleration, radiation, etc.) shall not exceed the values specified.

3.6.32 Clock accuracy (type 7) (see 6.4.4).

3.6.32.1 Clock accuracy (corrected pulse train output). When tested as specified in 4.8.33.1, the clock accuracy of a microcomputer compensated crystal oscillator with a time-corrected pulse train output, operating over the specified conditions (temperature, acceleration, radiation, etc.) for the specified duration after syntonization and synchronization, shall not exceed the value specified (see 3.1).

3.6.32.2 Clock accuracy (digital time-of-day output). When tested as specified in 4.8.33.2, the clock accuracy of a microcomputer compensated crystal oscillator with a digital clock time of day output, operating over the specified conditions (temperature, acceleration, radiation, etc.) for the specified duration after syntonization and synchronization, shall not exceed the value specified (see 3.1).

3.6.33 Built-in-test (BIT) (type 4 and type 6) (when specified, see 3.1).

3.6.33.1 BIT, oven operating temperature (when specified, see 3.1). When tested as specified in 4.8.34.1, the BIT output voltage levels corresponding to either a "fault" or an "operational" oven operating temperature condition shall not exceed the limits specified.

3.6.33.2 BIT, oven supply voltage (when specified, see 3.1). When tested as specified in 4.8.34.2, the BIT output voltage levels corresponding to either a "fault" or an "operational" oven supply voltage condition shall not exceed the limits specified.

3.6.33.3 BIT, RF output voltage (when specified, see 3.1). When tested as specified in 4.8.34.3, the BIT output voltage levels corresponding to either a "fault" or an "operational" RF output voltage condition at the threshold level specified shall not exceed the limits specified.

3.6.34 Frequency aging (see 6.4.11).

3.6.34.1 Frequency aging (type 1 and type 2). When tested as specified in 4.8.35.1, the frequency aging at specified temperature shall not exceed the specified limits as follows:

a. Maximum change over a 30 day period (see 3.1).

b. Projected maximum change over a 1 year period (unless otherwise specified, e.g., 5 years, etc.) (see 3.1). Support information shall be provided to the qualifying activity showing that the projected aging performance will be met.

3.6.34.2 Frequency aging (type 3, type 4, type 5, type 6, type 7, and type 8). When tested as specified in 4.8.35.2, the frequency aging at a specified temperature shall not exceed the specified limits as follows:

a. Total change from day 0 to day 30.

Downloaded from http://www.everyspec.com

b. Projected total change for 1 year (unless otherwise specified, e.g., 5 years, etc.) (see 3.1).

c. Aging rate per day at day 30 (when specified, see 3.1).

d. Change between any successive time periods (when specified, see 3.1).

3.6.35 Input power aging (type 4 and type 6) (see 6.4.25) (when specified, see 3.1). When tested as specified in 4.8.36, the input power aging rate of a hermetic or high vacuum seal oven-controlled crystal oscillator shall not exceed the value specified.

3.6.36 Conducted interference (when specified, see 3.1). When tested as specified in 4.8.37, the conducted interference at the specified terminals of the oscillator shall not exceed the peak-to-peak ripple specified within the bandwidth specified.

3.6.37 Frequency-environment tolerance (see 6.4.12). When tested as specified in 4.8.38, the frequency deviation, referenced to an initial frequency, due to the specified environmental condition shall not exceed the limits specified (see 3.1).

3.6.38 Vibration.

3.6.38.1 Vibration, sinusoidal (nonoperating). After undergoing the test specified in 4.8.39.1, the oscillator shall be capable of operation. Unless otherwise specified (see 3.1), the requirements specified in 3.6.4, 3.6.20, and 3.6.37 shall be met. The requirements of 3.6.10 shall be met when specified.

3.6.38.2 Vibration, sinusoidal (operating) (when specified, see 3.1). While undergoing the test as specified in 4.8.39.2, the oscillator shall be capable of operation. Unless otherwise specified (see 3.1), the requirements specified in 3.6.4 and 3.6.20 shall be met during the test. The requirements in 3.6.16.2 and 3.6.17.3 shall be met when specified.

Unless otherwise specified (see 3.1), following the above tests, the requirements of 3.6.37 shall be met.

3.6.38.3 Vibration, random (nonoperating) (when specified, see 3.1). After undergoing the test as specified in 4.8.39.3, the oscillator shall be capable of operation. Unless otherwise specified (see 3.1), the requirements specified in 3.6.4, 3.6.20, and 3.6.37 shall be met.

3.6.38.4 Vibration, random (operating) (when specified, see 3.1). While undergoing the test as specified in 4.8.39.4, the oscillator shall be capable of operation. Unless otherwise specified (see 3.1), the requirements specified in 3.6.4 and 3.6.20 shall be met during the test. The requirements in 3.6.16.2 shall be met when specified.

Unless otherwise specified (see 3.1), following the above tests, the requirements of 3.6.37 shall be met.

3.6.39 Acoustic noise (operating) (when specified, see 3.1). While undergoing the test as specified in 4.8.40, this oscillator shall be capable of operation. Unless otherwise specified (see 3.1), the requirements specified in 3.6.4 and 3.6.20 shall be met during the test. The requirements in 3.6.16.3 shall be met when specified.

Unless otherwise specified (see 3.1), following the above tests, the requirements of 3.6.37 shall be met.

Downloaded from http://www.everyspec.com

3.6.40 Shock (specified pulse) (see 4.8.41).

3.6.40.1 Shock (specified pulse) (nonoperating). After undergoing the test specified in 4.8.41.1, the oscillator shall be capable of operation. Unless otherwise specified (see 3.1) the requirements specified in 3.6.1, 3.6.4, 3.6.9 (frequency-adjustable oscillators only), 3.6.13, 3.6.20, and 3.6.37 shall be met. The requirements of 3.6.10 shall be met when specified.

3.6.40.2 Shock (specified pulse) (operating) (when specified, see 3.1). While undergoing the test specified in 4.8.41.2, the oscillator shall be capable of operation. Unless otherwise specified (see 3.1), the requirements specified in 3.6.31 shall be met over the interval specified during the test.

Unless otherwise specified (see 3.1), following the above tests, the requirements of 3.6.37 shall be met.

3.6.41 Acceleration (when specified, see 3.1).

3.6.41.1 Acceleration (nonoperating) (when specified, see 3.1). After undergoing the test specified in 4.8.42.1, the oscillator shall be capable of operation. The requirements specified in 3.6.1, 3.6.4, 3.6.20, and 3.6.37 shall be met.

3.6.41.2 Acceleration (operating) (when specified, see 3.1). While undergoing the test as specified in 4.8.42.2, the oscillator shall be capable of operation at all acceleration levels to the maximum specified. Unless otherwise specified, the requirements specified in 3.6.4, 3.6.17.1, and 3.6.20 shall be met during the test.

Unless otherwise specified (see 3.1), following the above tests, the requirements of 3.6.37 shall be met.

3.6.42 Explosion (operating) (when specified, see 3.1). When tested as specified in 4.8.43, the explosion mixture in the test chamber surrounding and external to the oscillator shall not explode, whether or not an explosion occurs within the oscillator. The oscillator shall be electrically operable after the test.

3.6.43 Magnetic field (operating) (when specified, see 3.1). While undergoing the test as specified in 4.8.44, the oscillator shall be capable of operation. Unless otherwise specified (see 3.1), the requirements in 3.6.4 and 3.6.19 shall be met during the test. The requirement of 3.6.18 shall be met when specified.

Unless otherwise specified (see 3.1), following the above tests, the requirements of 3.6.37 shall be met.

3.6.44 Thermal shock (nonoperating). When tested as specified in 4.8.45, the oscillator shall not show signs of mechanical damage. The requirements specified in 3.6.4, 3.6.20, and 3.6.37 shall be met after the test. Unless otherwise specified (see 3.1), the requirements in 3.6.10 shall be met when specified.

3.6.45 Ambient pressure.

3.6.45.1 Ambient pressure (nonoperating). When tested at the specified storage temperature (see 3.1) as specified in 4.8.46.1, the oscillator shall be capable of storage at a reduced pressure. Unless otherwise specified (see 3.1), the requirements specified in 3.6.4, 3.6.20, and 3.6.37 shall be met after the test.

3.6.45.2 Ambient pressure (operating) (when specified, see 3.1). While undergoing the test as specified in 4.8.46.2, the oscillator shall be capable of operation at all pressures from atmospheric pressure (101 kPa) to the pressure specified (see 3.1). Unless otherwise specified (see 3.1), the requirements specified in 3.6.4 and 3.6.20 shall be met during the test.

Unless otherwise specified (see 3.1), following the above test, the requirements of 3.6.37 shall be met.

3.6.46 Storage temperature. After undergoing the test at the specified storage temperatures (see 3.1) as specified in 4.8.47, the requirements specified in 3.6.1, 3.6.4, 3.6.9 (frequency-adjustable oscillators only), 3.6.13, 3.6.20, and 3.6.37 shall be met. The requirements in 3.6.10 shall be met when specified.

Downloaded from http://www.everyspec.com

3.6.47 Radiation hardness (operating) (when specified, see 3.1). When tested as specified in 4.8.48, the oscillator shall meet the requirements specified below. Unless otherwise specified (see 3.1), after the radiation tests, the requirements specified in 3.6.4, 3.6.9 (frequency-adjustable oscillators only), 3.6.13, and 3.6.20 shall be met. The requirements of 3.6.10 and 3.6.31 shall be met when specified.

3.6.47.1 Total dose (when specified, see 3.1). When tested as specified in 4.8.48.1, the radiation-induced changes in output frequency shall not exceed the values specified.

3.6.47.2 Dose rate (when specified, see 3.1). When tested as specified in 4.8.48.2, the maximum radiation-pulse-induced changes in output frequency shall not exceed the values specified. The radiation-pulse-induced changes in frequency after the specified time interval shall not exceed the values specified. If specified (see 3.1), the accumulated time error (see 3.6.31) over the specified time interval shall not exceed the value specified.

3.6.47.3 Neutrons (when specified, see 3.1). When tested as specified in 4.8.48.3, the neutron-induced changes in output frequency shall not exceed the values specified.

3.6.48 Resistance to soldering heat. After undergoing the test specified in 4.8.49, the oscillator shall be capable of operation. The requirements specified in 3.6.1, 3.6.4, 3.6.9 (frequency-adjustable oscillators only), 3.6.13, 3.6.20, and 3.6.37 shall be met. The requirements in 3.6.10 shall be met when specified.

3.6.49 Moisture resistance (when specified, see 3.1). When tested as specified in 4.8.50, there shall be no resultant impairment or damage sufficient to cause failure of the oscillators. The requirements specified in 3.6.4, 3.6.20, and 3.6.37 shall be met after the test.

3.6.50 Salt atmosphere (corrosion). When tested as specified in 4.8.51, there shall be no warping, cracking, peeling, excessive corrosion or in the case of plated metals, corrosion which has passed through the plating and exposed the base metal. Unless otherwise specified (see 3.1), the requirements specified in 3.6.1, 3.6.4, 3.6.20, and 3.6.37 shall be met after the test.

3.6.51 Terminal strength (lead integrity) (see 4.8.52).

3.6.51.1 Terminals. When tested as specified in 4.8.52.1, the external terminals shall be firmly attached or embedded within the base or connector and shall be capable of withstanding the specified pull or bends (see 3.1) without evidence of damage. After this test, the requirements in 3.6.1 shall be met.

3.6.51.2 Pins (when applicable). When tested as specified in 4.8.52.2, external pins shall be capable of withstanding the specified force (see 3.1) without evidence of damage. After this test, the requirements in 3.6.1 shall be met.

3.6.51.3 Solder pads (when applicable). When tested as specified in 4.8.52.3, the solder pads of leadless chip carrier and similar devices shall be capable of withstanding the specified delamination (peel) stress without any evidence of damage. After this test, the requirements in 3.6.1 shall be met.

3.6.52 Solderability. When tested as specified in 4.8.53, the terminals of the oscillators shall conform to the criteria specified in MIL-STD-202, method 208.

3.6.53 Resistance to solvents. When tested as specified in 4.8.54, there shall be no evidence of physical damage and the marking shall remain legible.

3.6.54 Fungus (when specified, see 3.1). All external materials shall be nonnutrient to fungus growth or shall be suitably treated to retard fungus growth. The manufacturer shall certify that all external materials are fungus resistant or shall perform the test specified in 4.8.55. There shall be no evidence of fungus growth on the external surfaces.

Downloaded from http://www.everyspec.com

3.7 Marking. Marking shall be in accordance with MIL-STD-1285, method I, and shall include the PIN, source code, serial number (see 3.7.1), date code, the ESD sensitivity identifier (see 3.7.3), and the "JAN" brand (see 3.7.4).

Date and source code shall be in accordance with MIL-STD-1285. At the option of the manufacturer, the PIN may appear on two lines. In this event, the PIN shall be on successive lines and divided between the temperature range and frequency. Unless otherwise specified (see 3.1), the marking shall not be less than .035 inch (0.89 mm) in height and shall be arranged as illustrated (see 3.1). The following is an example of the complete marking:

12345	-	CAGE code
9224J	-	Date code and JAN marking
M55310/01-B01A	-	First part of PIN
32K76800	-	Remainder of PIN
XXXXXX	-	Serial number

The date code shall be the date of the final seal of the oscillator.

3.7.1 Serial number (Product level B and product level S only). Prior to post burn-in electrical testing, each oscillator shall be marked with a unique serial number assigned consecutively.

3.7.2 Frequency offset at reference temperature (see 3.6.10.2) (when applicable). Frequency adjustable oscillators that are required to be calibrated to a frequency offset from nominal frequency, unique to each oscillator, shall be marked as follows:

±X.X Hz at XX°C

The frequency offset shall be rounded to the nearest tenth of a Hz unless otherwise specified.

3.7.3 ESD sensitivity identifier. Oscillators shall be marked with a sensitive electronic device symbol as specified in MIL-STD-1285, or if room does not permit, the outline or solid form of an equilateral triangle (i.e., Δ) shall be used and may also be used as a pin 1 identifier. The equilateral triangle will designate these oscillators as sensitive to ESD in the range of 0 volts - 1,999 volts and shall be handled as such.

3.7.4 JAN and J marking. The United States Government has adopted, and is exercising legitimate control over the certification marks "JAN" and "J", respectively, to indicate that items so marked or identified are manufactured to, and meet all the requirements of specifications. Accordingly, items acquired to and meeting all of the criteria specified herein and in applicable specification, shall bear the certification mark "JAN" except that items too small to bear the certification mark "JAN" shall bear the letter "J". The "JAN" or "J" shall be placed immediately before the part number except that if such location would place a hardship on the manufacturer in connection with such marking, the "JAN" or "J" may be located on the first line above or below the part number. Items furnished under contracts or orders which either permit or require deviation from the conditions or requirements specified herein and in applicable specifications shall not bear "JAN" or "J". In the event an item fails to meet the requirements of this specification and the applicable specification sheets or associated specifications, the manufacturer shall remove completely the part number and the "JAN" or the "J" from the sample tested and also from all items represented by the sample. The "JAN" or "J" certification mark shall not be used on products acquired to contractor drawings or specifications. The United States Government has obtained Certificate of Registration Number 504,860 for the certification mark "JAN" and Registration Number 1,586,261 for the certification mark "J".

3.7.5 Beryllium oxide package identifier. If an oscillator package contains beryllium oxide, the oscillator shall be marked with the designation "BeO".

Downloaded from http://www.everyspec.com

3.8 Recycled, recovered, or environmentally preferable materials. Recycled, recovered, or environmentally preferable materials should be used to the maximum extent possible provided that the material meets or exceeds the operational and maintenance requirements, and promotes economically advantageous life cycle costs.

3.9 Workmanship. Oscillators shall be manufactured and processed in such a manner to be uniform in quality and shall be free from any defects that will affect life, serviceability, or appearance.

4. VERIFICATION

4.1 Classification of inspection. The examination and testing of oscillators shall be classified as follows:

a. Screening (see 4.4).

b. Qualification inspection (see 4.5).

c. Conformance inspection (see 4.7).

d. Periodic inspection (group C inspection, see 4.7.2).

4.2 QPL system. The manufacturer shall establish and maintain a QPL system as described in 3.3. Evidence of such compliance shall be verified by the qualifying activity of this specification as prerequisite for qualification and retention of qualification.

4.3 Inspection conditions.

4.3.1 Standard test conditions. Unless otherwise specified herein, inspections shall be performed in accordance with the test conditions specified in the "GENERAL REQUIREMENTS" of the applicable DoD standard, i.e., MIL-STD-202, MIL-STD-810, or MIL-STD-883. When a standard test method is not specified, the standard test conditions of MIL-STD- 883 shall apply.

4.3.2 Test fixture. Each test shall be performed with the oscillator mounted in the appropriate test fixture.

4.3.3 Special test methods. Special test procedures are applicable only to special purpose items. These special procedures must be specified in any acquisition documents. However, all test procedures not specified herein shall be verified and approved by the qualifying activity prior to implementation. Prior approval of such test methods shall not be construed as a guarantee of the acceptance of the finished product.

4.3.4 Equilibrium conditions. Unless otherwise specified (see 3.1), all electrical tests shall be conducted under equilibrium conditions. When test conditions cause a significant change with time of the characteristic being measured, means of compensation for such effects should be specified; for example, the period of time that the oscillator shall be maintained at specified test conditions before making a measurement of output frequency.

4.3.5 Standard environmental conditions. Unless otherwise specified (see 3.1), all measurements shall be made at an ambient temperature of +25°C ±3°C. Unless otherwise specified (see 3.1), the standard point relative humidity (RH) shall be from 35 percent to 65 percent RH pre-seal, and from 35 percent to 75 percent RH post-seal.

4.3.6 Power supplies. DC power sources used in the testing of crystal controlled oscillators should not have a ripple content large enough to affect the desired accuracy of measurement; ac power sources should be transient-free. When the ripple or transient content of the power sources is critical to the measurement being performed, they must be fully defined in the specification sheet (see 3.6.2).

4.3.7 Basic test conditions. The basic test configuration for electrical performance measurement shall be as depicted on figure 1. Unless otherwise specified (see 3.1), all measurements shall be performed at specified nominal supply voltage and load impedance controlled to an accuracy of 1 percent.

Downloaded from http://www.everyspec.com

4.3.8 Precautions. The measurement configurations and procedures for specific electrical tests (see 4.8) are the preferred methods. Should measuring apparatus modify the characteristic being inspected, due allowance must be made for any loading effects.

4.3.9 Air flow conditions for temperature tests. When oscillators are to be measured at temperatures other than +25°C ±3°C, adequate air circulation shall be provided to insure good temperature control. Temperature chambers shall be employed which provide an air flow sufficient to ensure that all the oscillators in the group of oscillators under test are within a 2°C range. Unless otherwise specified (see 3.1), in this preferred configuration, the temperature sensor shall be placed in the return flow of the air stream to measure reference point temperature. If still air is specified (see 3.1), or if forced air circulation affects oscillator performance, still air conditions may be simulated by enclosing the oscillator in a draft shield consisting of a thermally conducting box with the internal dimensions such as to provide an even temperature distribution around the oscillator. In this configuration, the reference point temperature is as measured at the draft shield, unless otherwise specified. When a draft shield is used, it must be retained for both high and low temperature tests and sufficient air flow must be maintained in the chamber.

4.3.10 Precision of measurement. The limits stated in the specification sheet are absolute. Tolerances on measurement instruments and methods shall be taken into account when determining actual experimental limits. Unless otherwise specified (see 3.1), the precision and accuracy of test methods and equipment used for the evaluation of oscillator performance shall be at least a factor of 10 better than the tolerances to be determined. (For example, a voltmeter accuracy of ±0.1 percent to determine level to a tolerance of ±1 percent).

4.4 Screening (Product level B and product level S only). Oscillators to be delivered in accordance with this specification shall have been subjected to and passed all the screening tests of table II or table III for the applicable oscillator product level and class, in the order shown. Where a hybrid subassembly and a discrete subassembly are used in a single type of oscillator (i.e., class 3), the hybrid portion is to be subjected to screening in accordance with table III, product level B or product level S, as specified, except acceleration shall be 5,000 gravity units (g's). This shall be done prior to assembly into the discrete component package. Electrical test parameters, values, limits, and conditions for the hybrid portion of the oscillator only shall be established by the manufacturer and approved by the qualifying activity. The complete oscillator shall then be subjected to the specified screening requirements for the class 1 oscillator (see table II). The electrical test parameters, values, limits, and conditions for the completed oscillator shall be as specified in the specification sheet (see 3.1).

4.4.1 Nondestructive bond pull (class 2 product level S only). Nondestructive bond pull shall be conducted in accordance with MIL-STD-883, method 2023. Percent Defects Allowable (PDA) shall be 2 percent of the total number of wires.

4.4.2 Internal visual inspection for class 2 crystal oscillators. Internal visual inspection shall be in accordance with MIL-STD-883, method 2017 and method 2032, and supplemented by the manufacturer's documentation for crystal attachment. During the time interval between final internal visual inspection and preparation for sealing class 2 (hybrid) crystal oscillators shall be stored in a dry, nitrogen environment, or in a vacuum bake oven as specified in table III. The following details shall apply:

a. The first internal visual inspection shall be performed prior to installation of the crystal element.

b. The final internal visual inspection shall occur after crystal resonator installation and prior to cover seal.

Downloaded from http://www.everyspec.com

4.4.3 Pre-burn-in electrical testing.

a. Pre-burn-in electrical testing is optional for product level B crystal oscillators except where delta limit measurements are required. However, crystal oscillators may be tested to remove defects prior to further screening and to form a basis for application of PDA criteria.

b. Electrical characteristics to be measured shall be as specified in table II, table III, and the applicable specification sheet (see 3.1).

4.4.4 Burn-in. Unless otherwise specified in the specification sheet, PDA shall be applicable only to +23°C and/or +25°C static tests, as specified. If not otherwise specified, the maximum PDA for product level B shall be 10 percent (or one oscillator, whichever is greater). The maximum PDA for product level S shall be 2 percent (or one oscillator, whichever is greater). The period of failure accountability shall include burn-in through final electrical test.

4.4.5 Lots resubmitted for burn-in. Burn-in lots may be resubmitted to burn-in one time only. Resubmitted lots shall be kept separate from new lots and shall be inspected for all specified characteristics using a tightened inspection PDA. For 10 percent PDA use tightened PDA of 7 percent, for 5 percent use tightened PDA of 3 percent, for 3 percent and for 2 percent use a tightened PDA of 1.5 percent.

TABLE II. Screening (100 percent) for class 1 and class 3 oscillators.

Test inspection	Product level S method-condition	Product level B method-condition
Random vibration	MIL-STD-202, method 214, condition I-B, duration 5 minutes per axis	N/A
Thermal shock	MIL-STD-202, method 107, condition A-1	MIL-STD-202, method 107, condition A
Electrical test: Input current-power Output waveform Output voltage-power As specified	 4.8.5 4.8.20 4.8.21 3.1	 N/A N/A N/A 3.1
Burn-in (load)	Maximum specified operating temperature (see 3.1), nominal supply voltage and burn-in load, 240 hours minimum	Maximum specified operating temperature (see 3.1), nominal supply voltage and burn-in load, 160 hours minimum
Electrical test: Input current-power Output waveform Output voltage-power As specified	 4.8.5 4.8.20 4.8.21 3.1	 4.8.5 4.8.20 4.8.21 3.1
Seal test	MIL-STD-202, method 112 (see 4.8.2)	MIL-STD-202, method 112 (see 4.8.2)
Radiographic 1/	MIL-STD-202, method 209	N/A

1/ Unless otherwise specified (see 3.1), the unit shall have one view taken with the x-ray in the Y direction (perpendicular to the largest package surface) and a second view 90° relative to the first view. Radiographic examination and acceptance criteria shall be as specified (see 3.1).

Downloaded from http://www.everyspec.com

TABLE III. Screening (100 percent) for class 2 oscillators.

Test inspection	Product level S method-condition	Product level B method-condition
Nondestructive bond pull	MIL-STD-883, method 2023	N/A
Internal visual	see 4.4.1	see 4.4.1
Stabilization bake (prior to seal) 1/	MIL-STD-883, method 1008, condition C (+150°C), 48 hours minimum	MIL-STD-883, method 1008, condition C (+150°C), 24 hours minimum
Thermal shock	MIL-STD-883, method 1011, condition A	N/A
Temperature cycling	MIL-STD-883, method 1010, condition B	MIL-STD-883, method 1010, condition B
Constant acceleration	MIL-STD-883, method 2001, condition A, Y_1 only (5000 g's)	MIL-STD-883, method 2001, condition A, Y_1 only (5000 g's)
Seal (fine and gross leak) 2/	see 4.8.2.2.2	see 4.8.2.2.2
Particle impact noise detection (PIND)	MIL-STD-883, method 2020, condition B	N/A
Electrical test:		
Input current-power	4.8.5	N/A
Output waveform	4.8.20	N/A
Output voltage-power	4.8.21	N/A
As specified	3.1	3.1
Burn-in (load)	+125°C, nominal supply voltage and burn-in load, 240 hours minimum	+125°C, nominal supply voltage and burn-in load, 160 hours minimum
Electrical test:	Nominal and extreme supply voltages, specified load, +23°C and temperature extremes, record all test parameters by serial number.	Nominal supply voltage, specified load, +23°C and verify frequency at the temperature extremes.
Input current-power	4.8.5	4.8.5
Output waveform	4.8.20	4.8.20
Output voltage-power	4.8.21	4.8.21
As specified	3.1	3.1
Radiographic 3/	MIL-STD-883, method 2012	N/A

1/ Vacuum bake and maintain oscillators in dry nitrogen atmosphere until sealed.

2/ For product level S oscillators, the seal test may be performed in any sequence between the final electrical test and external visual but it shall be performed after all shearing and forming operations on the terminals. For product level B oscillators, the seal test shall be performed in any sequence between the constant acceleration test and external visual except that they shall be performed after all shearing and forming operations on the terminals.

3/ At the option of the contractor, radiographic inspection may be performed following PIND test to expedite screening test completion. Recorded screening information shall indicate the test sequence.

Downloaded from http://www.everyspec.com

4.4.6 Failures. All oscillators that fail any test criteria in the screening sequence shall be removed from the lot at the time of observation or immediately at the conclusion of the test in which failure was observed. Once rejected and verified as a failure, acceptable rework may be performed in accordance with the following:

a. Rework of class 2 oscillators shall be in accordance with appendix A.

b. Following rework, class 2 oscillators shall be subjected to all tests in the screening table (see table III) beginning with the test in which failure occurred.

4.5 Qualification inspection. Qualification inspection shall be performed at a laboratory acceptable to the government (see 6.3) on sample units produced with equipment and procedures normally used in production.

4.5.1 Sample. The number of sample units comprising a sample of crystal oscillators to be subjected to qualification inspection shall be as specified in appendix C. Sample units shall have previously passed all the requirements of the screening tests of table II or table III for the product level and type of construction for which qualification is requested. Extension of qualification requirements are also specified in appendix C.

4.5.2 Test routine. Qualification samples shall be subjected to the tests of table IV. All sample units shall be subjected to the tests of group I, group II, and subgroup 1 of group III. The samples shall then be divided into three groups and subjected to the tests of subgroup 2, subgroup 3, and subgroup 4 of group III, in the order shown. Subgroup 5 inspections, for class 2 oscillators only, shall be performed on three samples (or five samples, see table IV), and may either be selected from samples which have previously been subjected to other qualification inspections or may be additional samples.

4.5.3 Failures. Failures in excess of those allowed in table IV shall be cause for refusal to grant qualification.

4.6 Retention of qualification. To retain qualification, every 24 months the contractor shall provide verification of the following requirements:

a. MIL-STD-790 program.

b. Design of the oscillator has not been modified.

c. Screening tests, conformance tests, and periodic tests have been performed as specified herein.

d. The contractor retains the capability to manufacture and test oscillators to this specification.

e. Continued qualification to product level C shall be based on continued maintenance of qualification for product level B.

In the event that no production has occurred in this period, the contractor shall verify to the qualifying activity that the capability to manufacture and test the QPL oscillator still exists and that the contractor wants to remain on the QPL.

Downloaded from http://www.everyspec.com

4.7 Conformance inspection.

4.7.1 Inspection of product for delivery.

4.7.1.1 Product level C. Inspection of product for delivery shall consist of an inspection system which meets the requirements of this specification. (see 4.7.1.4).

TABLE IV. Qualification inspection.

Inspection	Requirement paragraph	Test paragraph	Number of sample units	Number of failures
GROUP I				
Visual and mechanical inspection	3.1, 3.4, 3.5, 3.7, 3.9	4.8.1	All sample units	0
Seal	3.6.1	4.8.2		
Electricals	3.6.2 through 3.6.33.3, as applicable	4.8.3 through 4.8.34.3		
GROUP II				
Frequency aging	3.6.34	4.8.35	All sample units	0
Input power aging (type 4 and type 6) (when specified)	3.6.35	4.8.36		
GROUP III				
Subgroup 1				
Conducted interference (when specified)	3.6.36	4.8.37	All sample units	0
Vibration	3.6.38	4.8.39		
Acoustic noise (when specified)	3.6.39	4.8.40		
Shock	3.6.40	4.8.41		
Acceleration (when specified)	3.6.41	4.8.42		
Explosion (when specified)	3.6.42	4.8.43		
Subgroup 2				
Magnetic field (operating) (when specified)	3.6.43	4.8.44	One-half of sample units	0
Thermal shock	3.6.44	4.8.45		
Ambient pressure	3.6.45	4.8.46		
Storage temperature	3.6.46	4.8.47		
Radiation hardness (operating) (when specified)	3.6.47	4.8.48		

See footnote at end of table.

Downloaded from http://www.everyspec.com

TABLE IV. Qualification inspection - Continued.

Inspection	Requirement paragraph	Test paragraph	Number of sample units	Number of failures
Subgroup 3				
Resistance to soldering heat	3.6.48	4.8.49	One-fourth of sample units	0
Moisture resistance	3.6.49	4.8.50		
Salt atmosphere 1/	3.6.50	4.8.51		
Subgroup 4				
Terminal strength (lead integrity)	3.6.51	4.8.52	One-fourth of sample units	0
Solderability	3.6.52	4.8.53		
Resistance to solvents	3.6.53	4.8.54		
Fungus (when specified)	3.6.54	4.8.55		
Subgroup 5				
Internal water vapor content (applicable to class 2 oscillators only)	3.5.1.3	4.8.56	3 sample units or 5 sample units	0 1

1/ For class two oscillators. the manufacturer may, with approval of the qualifying activity, substitute a package evaluation for salt atmosphere (i.e., MIL-PRF-38534 package evaluation).

4.7.1.2 Product level B and product level S. Inspection of product for delivery shall consist of the screening tests (see 4.4) and group A and group B inspections. Product level S oscillators shall not be delivered until they have successfully completed group A and group B inspections. Unless otherwise specified, product level B oscillators may be delivered after sample units have passed group A inspection and prior to sample units completing group B inspection (see 4.7.1.3).

4.7.1.3 Production and inspection lot.

4.7.1.3.1 Production lot. A production lot shall consist of all oscillators covered by a single specification sheet and single PIN. Manufacture of all parts in the lot shall have been started, processed, assembled, and tested as a group. Lot identity shall be maintained throughout the manufacturing cycle.

4.7.1.3.2 Inspection lot. A inspection lot shall consist of all oscillators of the same type produced under essentially the same conditions, and offered for inspection at one time over a period not to exceed 13 weeks. For product level S oscillators, an inspection lot shall consist of one production lot.

4.7.1.4 Group A inspection.

4.7.1.4.1 Product level C. The contractor shall establish and maintain an inspection system to verify the oscillators meet the electrical requirements, visual/mechanical, hermetic (when applicable) and solderability requirements. In-line or process control may be part of such a system. The inspection system shall also include criteria for lot rejection and corrective actions. The inspection system shall be verified under the overall MIL-STD-790 QPL system. NOTE: Since the product level C oscillator is the product level B design without the mandatory government conformance inspection, this product is still expected to meet the environmental qualification type requirements (e.g., moisture resistance, thermal shock, shock, vibration, etc.)

Downloaded from http://www.everyspec.com

4.7.1.4.2 Product level B and product level S. Group A inspection shall consist of the inspections specified in table V, in the order shown. Manufacturer has the option as to the sequence in which electrical tests are performed.

4.7.1.4.3 Sampling procedure (subgroup 1).

4.7.1.4.3.1 Product level B oscillators. A sample of parts shall be randomly selected from each inspection lot in accordance with table VI. If one or more defects are found, the lot shall be retested or re-examined for that characteristic which contributed to the failure. After corrective action and removal of defects, a new sample of parts shall be randomly selected in accordance with table VI. If one or more defects are found in the second sample, the lot shall be rejected and shall not be supplied to this specification.

4.7.1.4.3.2 Product level S oscillators. Oscillators shall be subjected to 100 percent inspection as specified in table V. Rejects shall be removed from the lot. Lots having more than 5 percent or 1 unit rejects, whichever is greater, shall not be furnished on the contract or purchase order.

4.7.1.4.4 Sampling procedure (subgroup 2).

4.7.1.4.4.1 Product level B oscillators. A sample of parts shall be randomly selected from each inspection lot in accordance with table VI. If one or more defects are found, the lot shall be rescreened and defects removed. After screening and removal of defects, a new sample of parts shall be randomly selected in accordance with table VI. If one or more defects are found in the second sample, the lot shall be rejected and shall not be supplied to this specification.

4.7.1.4.4.2 Product level S oscillators. Oscillators shall be subjected to 100 percent inspection as specified in table V. Rejects shall be removed from the lot.

4.7.1.4.5 Sampling procedure, product level B and S oscillators (subgroup 3). Five samples shall be selected randomly from each inspection lot and subjected to the subgroup 3 solderability test. The manufacturer may use electrical rejects from the subgroup 1 tests and/or screening rejects that have been subjected to burn-in, as a minimum, for all or part of the samples to be used for solderability testing. As an alternative, the manufacturer may use empty test packages for the solderability test provided the empty packages have been subjected to the same environmental conditions and processes as the completed oscillators. If there is one or more defects, the lot shall be considered to have failed.

4.7.1.4.5.1 Rejected lots (subgroup 3). In the event of one or more defects, the inspection lot is rejected. The manufacturer may use one of the following options to rework the lot:

a. Five samples from each production lot that was used to form the failed inspection lot shall be individually submitted to the solderability test as required in 4.7.1.4.5. Production lots that pass the solderability test are available for shipment. Production lots failing the solderability test can be reworked only if submitted to the solder dip procedure in 4.7.1.4.5.1b.

b. The manufacturer submits the failed lot to a 100 percent solder dip using an approved solder dip process in accordance with 3.5.3.3. Following the solder dip process, the subgroup 1 electrical inspections and the subgroup 3 solderability test shall be repeated on the lot. If there are one or more defects, the lot shall be considered rejected and shall not be furnished against the requirements of this specification.

4.7.1.4.6 Disposition of sample units. Sample units which have been subjected to subgroup 1 and subgroup 2 of the group A inspection may be delivered on the contract after successful completion of group B tests. Oscillators subjected to subgroup 3 of the group A inspection shall not be delivered on a contract or purchase order.

Downloaded from http://www.everyspec.com

TABLE V. Group A inspection (for product level B and product level S only).

Inspection	Requirement paragraph	Test method paragraph	Sampling procedure
Subgroup 1 Electricals	3.6.2 through 3.6.33.3 (as applicable)	4.8.3 through 4.8.34.3	4.7.1.2.1
Subgroup 2 Visual and mechanical	3.1, 3.4, 3.5, 3.7, and 3.8	4.8.1	4.7.1.2.2
Subgroup 3 Solderability 1/	3.6.52	4.8.53	4.7.1.2.3

1/ This solderability test can be eliminated if the manufacturer has demonstrated process control under the SPC program (see 3.3.1), and has been approved by the qualifying activity. If the design, material, construction, or processing of the part is changed or, if there are any quality problems, or failures, the qualifying activity may require resumption of the specified testing. Deletion of testing does not relieve the manufacturer from meeting the test requirement in case of dispute.

TABLE VI. Group A and group B, zero defect sampling plan.

Lot Size	Sample Size		
	Product level B		
	Group A		Group B
	Subgroup 1	Subgroup 2	
1 to 13	100 percent	100 percent	100 percent
14 to 50	100 percent	13	13
51 to 150	50	13	13
151 to 280	50	20	20
281 to 500	50	29	29
501 to 1,200	75	34	34
1,201 to 3,200	116	42	42
3,201 to 10,000	116	50	50
10,001 to 35,000	135	60	60
35,001 to 150,000	170	74	74
150,001 to 500,000	200	90	90
500,001 and over	244	102	102

4.7.1.5 Group B inspection (Product level B and product level S only). Group B inspection shall consist of the frequency aging test and input power aging test (when specified), (see 3.6.34, 3.6.35, 4.8.35, and 4.8.36).

4.7.1.5.1 Product level B oscillators. A sample of parts shall be randomly selected from inspection lots that have currently passed group A inspection in accordance with table VI. If one or more defects are found, the sample has failed. Group B inspection shall be completed within 6 months of shipment. If the manufacturer can demonstrate that the group B inspections have been performed five consecutive times with zero failures, the frequency of these tests, with the approval of the qualifying activity can be performed on a 6-month basis. If the design, material, construction, or processing of the part is changed or, if there are any quality problems or failures, the qualifying activity may require resumption of the original test frequency.

4.7.1.5.1.1 Failed sample(s). If a sample fails group B inspection, the cognizant inspection activity and the qualifying activity shall be notified immediately. The manufacturer shall take corrective action on the

Downloaded from http://www.everyspec.com

materials or processes (or both), as warranted, and on all units of product which can be corrected and which were manufactured under essentially the same conditions, with essentially the same materials, process, etc., and which are considered subject to the same failure. Delivery of product level B oscillators prior to completion of group B testing shall be discontinued until corrective action, acceptable to the government, has been taken. As an alternative, if the inspection lots have not been shipped, the inspection lots shall be subjected to 100 percent inspection and defects removed.

4.7.1.5.2 Product level S oscillators. Group B inspection shall consist of 100 percent inspection.

4.7.1.5.2.1 Rejected lots. Lots having more than 5 percent total rejects or 1 reject, whichever is greater, shall not be furnished on contracts.

4.7.1.5.3 Disposition of sample units. Sample units which have passed group B inspection may be delivered on the contracts or purchase order if the lot is accepted.

4.7.2 Periodic inspection (Product level B and product level S only). Periodic inspection shall consist of group C inspection. Except where these inspections show noncompliance with the applicable requirements (see 4.7.2.1.4), delivery of products which have passed group A and group B shall not be delayed pending the results of these periodic inspections.

4.7.2.1 Group C inspection. Group C inspection shall consist of the tests specified in table VII, in the order shown. Group C inspection shall be performed on sample units randomly selected from inspection lots which have currently passed the group A and group B inspections.

NOTE: The manufacturer has the option of performing group B and group C testing in parallel.

a. If product level S oscillators are produced, product level S oscillators shall be used in retaining qualification for product level S, product level B, and product level C oscillators. Product level B oscillators will be used in retaining qualification for product level B and product level C only.

b. Further performance of group C tests shall be required by the qualifying activity for any of the following reasons:

   (1) Repeated failures of the same group A tests (four or more lots).

   (2) Unsatisfactory reports confirmed by the qualifying activity.

   (3) Change of oscillator design.

   (4) Change of material.

   (5) Change of processes.

Downloaded from http://www.everyspec.com

4.7.2.1.1 Sampling plan. A minimum of eight sample units shall be selected from lots produced during the 24-month period following qualification. To retain qualification for the frequency and temperature range for which qualification was originally granted, samples shall be selected on the following basis:

a. Four sample units from lots produced having the lowest frequency, widest operating temperature range, and most stringent frequency-temperature accuracy over that range.

b. Four sample units having the lowest frequency, widest operating temperature range, and most stringent frequency-temperature accuracy over that range from each group of lots produced of the intermediate frequencies. Groups are determined on the following basis:

(1) A crystal resonator change, for example: fundamental mode, third overtone or fifth overtone, etc.

(2) A change in the printed wiring board for discrete component construction or the substrate for hybrid construction.

(3) A change in the component configuration on the printed wiring board or substrate.

c. Four sample units from lots produced having the highest frequency, widest operating temperature range, and most stringent frequency-temperature accuracy over that range.

4.7.2.1.2 Failures. If one or more sample unit fails to pass group C inspection, the sample lot shall be considered to have failed. In that event, the qualifying activity shall be notified immediately. (see 4.7.2.1.4).

4.7.2.1.3 Disposition of sample units. Sample units which have been subjected to group C inspection shall not be delivered on the contract or purchase order, unless otherwise specified.

4.7.2.1.4 Noncompliance. If a sample fails group C inspection, the manufacturer shall notify the qualifying activity of such failure and take corrective action on the materials or processes (or both), as warranted, and on all units of product which can be corrected and which were manufactured using essentially the same materials and processes, and which are considered subject to the same failure. Acceptance and shipment of the product shall be discontinued until corrective action, acceptable to the qualifying activity has been taken. After the corrective action has been taken, group C inspection shall be repeated on additional sample units (all tests and inspections, or the test which the original sample failed, at the option of the qualifying activity). Group A and group B inspections may be reinstituted; however, final acceptance and shipment shall be withheld until the group C inspection has shown that the corrective action was successful. In the event of failure after reinspection, information concerning the failure shall be furnished to the qualifying activity.

4.8 Methods of inspection.

4.8.1 Visual and mechanical inspection. Oscillators shall be inspected to verify that the material, interface and physical dimensions, marking, and workmanship are in accordance with the applicable requirements (see 3.1, 3.4, 3.5, 3.7, and 3.9).

4.8.2 Seal (see 3.6.1). Oscillators shall be tested in accordance with 4.8.2.1, 4.8.2.2, or 4.8.2.3, as applicable.

4.8.2.1 O-ring-solder seal (nonhermetic) (see 3.6.1.1). Oscillators employing O-ring seal or solder seal (or combinations of both) shall be tested in accordance with MIL-STD-202, method 112, test condition D or test condition E.

4.8.2.2 Hermetic seal (see 3.6.1.2). Hermetic seal oscillators shall be tested in accordance with 4.8.2.2.1 or 4.8.2.2.2, as applicable. The fine leak test shall always precede the gross leak test.

Downloaded from http://www.everyspec.com

TABLE VII. Group C inspection.

Inspection	Requirement paragraph	Test paragraph
Subgroup1 (all sample units) 1/		
Conducted interference (when specified)	3.6.36	4.8.37
Vibration	3.6.38	4.8.39
Acoustic noise (when specified)	3.6.39	4.8.40
Shock	3.6.40	4.8.41
Acceleration (when specified)	3.6.41	4.8.42
Explosion (when specified)	3.6.42	4.8.43
Subgroup 2 (one-half of sample units) 1/		
Magnetic field (operating) (when specified)	3.6.43	4.8.44
Thermal shock	3.6.44	4.8.45
Ambient pressure	3.6.45	4.8.46
Storage temperature	3.6.46	4.8.47
Radiation hardness (operating) (when specified)	3.6.47	4.8.48
Subgroup 3 (one-fourth of sample units) 1/		
Resistance to soldering heat	3.6.48	4.8.49
Moisture resistance	3.6.49	4.8.50
Salt atmosphere 2/	3.6.50	4.8.51
Subgroup 4 (one-fourth of sample units)		
Terminal strength (lead integrity)	3.6.51	4.8.52
Resistance to solvents	3.6.53	4.8.54
Fungus (when specified)	3.6.54	4.8.55

1/ The manufacturer has the option, with qualifying activity approval, of performing a final set of electrical tests (see subgroup 1 of the group A inspection) in lieu of individual electrical tests after each test in the subgroup, except for the frequency-environmental tolerance test. In case of failures or dispute the qualifying activity may require resumption of the original test sequence.

2/ For class two oscillators the manufacturer may, with approval of the qualifying activity, substitute a package evaluation for salt atmosphere (i.e., MIL-PRF-38534 package evaluation).

Downloaded from http://www.everyspec.com

4.8.2.2.1 Class 1 or class 3 oscillators. Hermetic seal oscillators shall be tested in accordance with MIL-STD-202, method 112. The following details shall apply:

a. Fine leak:

(1) Test condition C.

(2) Procedures:

(a) Procedure III (without tracer gas as normally supplied).

(b) Procedure IV (with tracer gas as normally supplied).

(1) Leakage rate sensitivity: 10 percent of specified leak rate.

b. Gross leak:

(1) Test condition D or test condition E.

4.8.2.2.2 Class 2 oscillators. Hermetic seal oscillators shall be tested in accordance with MIL-STD-883, method 1014. The following details shall apply:

a. Fine leak: Test condition A_1, A_2, or B.

b. Gross leak: Test condition C.

NOTE: MIL-STD-202, method 112, test condition C may be substituted for the fine leak and MIL-STD-202, method 112, test condition D or test condition E for the gross leak tests, above.

4.8.2.3 High vacuum seal (type 4 and type 6) (when specified, see 3.1) (see 3.6.1.3). High vacuum seal oscillators shall be tested in accordance with MIL-STD-883, method 1014. The test details of 4.8.2.2.2 shall apply except that the radioisotope fine leak counting station (test condition B) shall have a minimum sensitivity corresponding to a leak rate of 10^{-11} atm cc/s of krypton^{85}.

NOTE: If a leakage rate lower than 1×10^{-10} atm cc/s is specified, the leak detection method to be employed shall be approved by the qualifying activity.

4.8.3 Supply voltage.

4.8.3.1 Oscillator supply voltage (see 3.6.2.1). Loaded as specified (see 3.1), the applicable voltage magnitude, tolerance, polarity, regulation, peak-to-peak ripple, peak-to-peak ripple frequency, noise, and ramp rate (turn-on) shall be measured across the input terminals of the oscillator.

4.8.3.2 Oven supply voltage (type 4 and type 6) (see 3.6.2.2). With the oscillator energized as in 4.8.3.1, the applicable oven voltage magnitude, tolerance, polarity, regulation, peak-to-peak ripple, peak-to-peak ripple frequency, and noise shall be measured across the input terminals of the oven.

4.8.3.3 Modulation-control input voltage (type 2, type 5, and type 6) (see 3.6.2.3). With the oscillator energized as in 4.8.3.1, the applicable modulation magnitude, tolerance, polarity, frequency limits, dc level limits or dc control magnitude, polarity, range, peak-to-peak ripple, peak-to-peak ripple frequency, regulation, and noise shall be measured across the input terminals of the oscillator.

4.8.4 Overvoltage survivability (see 3.6.3). The oscillator shall be subjected to an overvoltage 20 percent above the maximum specified supply voltage, for a duration of 1 minute, unless otherwise specified. The applied overvoltage for oscillators employing CMOS devices shall not exceed 16.5 volts.

Downloaded from http://www.everyspec.com

4.8.5 Input current-power.

4.8.5.1 Oscillator input current-power (see 3.6.4.1). The input current shall be measured or power calculated (P = EI) from measured values of voltage and current.

4.8.5.2 Oven input current-power (type 4 and type 6) (see 3.6.4.2). The oven input current shall be measured or oven input power calculated (P = EI) from measured values of voltage and current. For peak current-power measurement, it may be necessary to use a recording type instrument for the measurement of voltage and current in order to determine transient values with adequate resolution. The following details shall apply:

a. Measurement temperature: Lowest specified ambient (unless otherwise specified, see 3.1).

b. Stabilization time: 60 minutes ±10 minutes (unless otherwise specified, see 3.1).

4.8.5.3 Syntonization energy (type 8) (see 3.6.4.3). The input current I(t) of the rubidium reference shall be measured as a function of time during the syntonization period, t. The syntonization energy, Q, shall be calculated from measured values of I(t) and the supply voltage, E, as follows:

$$Q = E \int_0^t I(t)dt$$

which is approximated using the Trapezoidal Rule for n = 10 equally spaced intervals, unless otherwise specified, see 3.1.

The following detail shall apply:

Measurement temperature: Lowest specified ambient.

NOTE: The crystal oscillator portion of the RbXO shall have been fully stabilized and the rubidium reference shall be temperature stabilized in the OFF state prior to the test. Termination of the syntonization period shall be automatic.

4.8.6 Initial accuracy at reference temperature (when specified, see 3.1) (see 3.6.5). The initial frequency accuracy shall be tested immediately following stabilization at the reference temperature. Unless otherwise specified (see 3.1), frequency-adjustable oscillators shall be adjusted (calibrated) to nominal frequency or marked frequency offset, as applicable, in the interval between completion of stabilization and the measurement of final output frequency. The following details shall apply:

a. Measurement temperature: +25°C ±1°C (unless otherwise specified, see 3.1).

b. Stabilization time:

(1) Type 1 and type 2: 8 minutes ±5 minutes

(2) Type 3, type 5, and type 7: 20 minutes ±5 minutes

(3) Type 4 and type 6: 60 minutes ±10 minutes

(4) Type 8: immediately after syntonization to the rubidium reference (unless otherwise specified, see 3.1).

Qualification information in support of showing the capability for meeting this requirement within 30 days or the specified period (see 3.1) following shipment of nonfrequency-adjustable oscillators shall take into account the frequency changes measured in the group B frequency aging test.

Downloaded from http://www.everyspec.com

4.8.7 Frequency adjustment (see 3.6.6).

4.8.7.1 Mechanical-frequency-adjustment (frequency-adjustable oscillators) (see 3.6.6.1). The mechanical frequency-adjustment range and resolution shall be tested following stabilization. It shall be determined by frequency measurement that the output signal is capable of being set to either nominal frequency or marked frequency offset, as applicable, with the specified resolution and adjusted over the specified frequency adjustment range. For voltage controlled oscillators, the modulation-control voltage input terminal shall have applied to it the specified dc reference level voltage conditions (see 3.6.2.3). The test details of 4.8.6 shall apply.

4.8.7.2 Electrical-frequency-control (when specified, see 3.1) (see 3.6.6.2). The electronic frequency control range corresponding to the specified input control voltage (see 3.6.2.3) shall be determined by frequency measurement. The test details of 4.8.6 shall apply.

4.8.8 Frequency warm-up (when specified, see 3.1) (see 3.6.7). The time for an oscillator output to stabilize within specified limits shall be measured. After energizing the oscillator, the frequency shall be recorded at intervals not to exceed one-tenth of the specified warm-up time. If the frequency crosses the tolerance limits more than once, the longest crossover time shall determine the warm-up. Figure 2 shows a typical plot of output frequency after "turn on". The warm-up time, t_s, is the time taken for the output frequency to reach final frequency (defined to occur at time t_f) within the tolerances specified. The following details shall apply:

a. Measurement temperature: As specified (see 3.1).

b. Time (t_f) to final frequency (unless otherwise specified, see 3.1):

(1) Type 1 and type 2: 10 minutes $\pm$3 minutes.

(2) Type 3, type 5, and type 7: 20 minutes $\pm$5 minutes.

(3) Type 4, type 6, and type 8 (OCXO only): 60 minutes $\pm$10 minutes.

4.8.9 Initial frequency aging (type 4 and type 6) (when specified, see 3.1) (see 3.6.8). Prior to the test, the unenergized oscillator shall be subjected to the specified storage temperature for the storage period specified. Within 24 hours of the end of the storage period, the oscillator shall be brought to thermal equilibrium at the measurement temperature, and shall be energized. The oscillator's frequency shall be measured at specified intervals over the initial aging period(s). The maximum frequency change, or maximum rate of frequency change (if specified, see 3.1), measured over this period shall not exceed the value(s) specified. The following details shall apply:

a. Storage period and temperature: 24 hours at -40°C (unless otherwise specified, see 3.1).

b. Start of initial aging period: End of specified warm-up time (unless otherwise specified, see 3.1).

c. Duration of initial aging period: 48 hours (unless otherwise specified, see 3.1).

d. Measurement temperature: +25°C $\pm$1°C (unless otherwise specified, see 3.1).

e. Measurement interval: 1 hour (unless otherwise specified, see 3.1).

NOTE: The initial frequency aging test may be performed as an extension of the frequency warm-up test (see 4.8.8) provided the specified storage conditions are met.

Downloaded from http://www.everyspec.com

4.8.10 Initial frequency-temperature accuracy (see 3.6.9).

4.8.10.1 Initial frequency-temperature accuracy (one-half temperature cycle) (see 3.6.9.1). Prior to this test, frequency-adjustable oscillators shall be stabilized at the specified reference temperature and calibrated to nominal frequency (or marked frequency offset if applicable).

Initially, the oscillator shall be stabilized at the lowest specified temperature. After stabilization, the first frequency and temperature are recorded. The temperature is then increased in steps, as specified, allowing stabilization after each step before measurements are taken, until the highest temperature is reached. The initial frequency-temperature accuracy is determined by:

f-T accuracy = $\pm$ MAX $[\delta f_{max}, \delta f_{min}]$

where MAX [ ] is the maximum value among δf_{max} and δf_{min}.

δf_{max} and δf_{min} are computed as follows:

$\delta f_{max} = * (f_{max} - f_{nom})/f_{nom} *$

$\delta f_{min} = * (f_{min} - f_{nom})/f_{nom} *$

where f_{max} is the maximum frequency measured during the temperature run, f_{min} is the minimum frequency measured during the temperature run, and f_{nom} is the nominal frequency. The following details shall apply:

a. Calibration (frequency-adjustment) temperature (when applicable): +25 °C ±1°C (unless otherwise specified, see 3.1).

b. Temperature increment: As specified (see 3.1).

c. DC reference level (type 2, type 5, and type 6): As specified (see 3.6.2.3). If not specified, set to center of control voltage range, e.g., if range is +2 volts to +6 volts, set to +4 volts.

Qualification information in support of showing the capability for meeting this requirement within the specified period following shipment of nonfrequency-adjustable oscillators shall take into account the frequency changes measured in the group B frequency aging test.

4.8.10.2 Initial frequency-temperature accuracy including hysteresis (when specified, see 3.1) (see 3.6.9.2). The oscillator shall be tested over a complete temperature cycle. Initially it shall be frequency-adjusted (when applicable) and tested as specified in 4.8.10.1. After stabilization at the highest specified temperature, the temperature is decreased in steps, as specified, and measurements acquired in a similar manner until the lowest specified temperature is reached. The frequency-temperature accuracy shall be determined as in 4.8.10.1. Test details and qualification information of 4.8.10.1 apply.

Downloaded from http://www.everyspec.com

4.8.10.3 Initial frequency-accuracy including trim effect (one-half temperature cycle) (when specified, see 3.1) (see 3.6.9.3). The oscillator shall be subjected to a one-half temperature cycle, as in 4.8.10.1, with each of three frequency adjusted conditions as follows:

Condition 1: Oscillator frequency adjusted to nominal frequency (or marked frequency offset, if applicable) at the reference temperature.

Condition 2: Oscillator frequency adjusted to positive limit of specified frequency-adjustment range at the reference temperature.

Condition 3: Oscillator frequency adjusted to negative limit of specified frequency-adjustment range at the reference temperature.

The initial frequency-temperature accuracy shall be determined by:

$$\text{f-T accuracy} = \pm\text{MAX}\ [\delta f1_{max},\ \delta f1_{min},\ \delta f2_{max},\ \delta f2_{min},\ \delta f3_{max},\ \delta f3_{min}]$$

where MAX [ ] is the maximum value among δf's in the bracket.

The δf's are computed as follows:

$$\delta f1_{max} = * (f1_{max} - f1)/f1 *$$

$$\delta f1_{min} = * (f1_{min} - f1)/f1 *$$

$$\delta f2_{max} = * (f2_{max} - f2)/f2 *$$

$$\delta f2_{min} = * (f2_{min} - f2)/f2 *$$

$$\delta f3_{max} = * (f3_{max} - f3)/f3 *$$

$$\delta f3_{min} = * (f3_{min} - f3)/f3 *$$

where f1, f2, and f3 are the frequencies to which the oscillator is adjusted at the reference temperature for the three conditions. The max and min refer to the maximum and minimum frequencies measured during the respective temperature runs. The test conditions of 4.8.10.1 apply.

Alternate test method: When applicable, the test may be performed in a single frequency-temperature run by switching in the appropriate frequency-adjust elements (or control voltage, if applicable) at each temperature. The switched frequency-adjust elements or control voltages must adequately simulate actual conditions at the trim terminals. When the alternate method is used, evidence that the alternate test method yields the correct test results shall be provided to the qualifying activity along with the test measurements.

4.8.10.4 Initial frequency-temperature accuracy including hysteresis and trim effect (when specified, see 3.1) (see 3.6.9.4). The oscillator shall be subjected to a complete temperature cycle, as specified in 4.8.10.2, with each of the three frequency adjusted conditions. The initial frequency-temperature accuracy shall be determined as in 4.8.10.3. The test details of 4.8.10.1 shall apply.

Downloaded from http://www.everyspec.com

4.8.11 Frequency-temperature stability (when specified, see 3.1) (see 3.6.10).

4.8.11.1 Frequency-temperature stability (one-half temperature cycle) (when specified, see 3.1) (see 3.6.10.1). The oscillator shall be frequency-adjusted (when applicable) and then subjected to a one-half temperature cycle, as specified in 4.8.10.1. The frequency-temperature stability shall be determined as follows:

$$\text{f-T stability} = \pm (f_{max} - f_{min}) / (f_{max} + f_{min})$$

where f_{max} is the maximum frequency measured during the temperature run, and f_{min} is the minimum frequency measured during the temperature run. If specified, a frequency versus temperature curve shall be generated in the format specified. The test details of 4.8.10.1 shall apply.

4.8.11.2 Frequency-temperature stability including hysteresis (when specified, see 3.1) (see 3.6.10.2). The oscillator shall be frequency adjusted (when applicable) and then subjected to the complete temperature cycle, as specified in 4.8.10.2. The frequency-temperature stability shall be determined as in 4.8.11.1. If specified, a frequency versus temperature curve shall be generated in the format specified. The test details of 4.8.10.1 shall apply.

4.8.11.3 Frequency-temperature stability including trim effect (one-half temperature cycle) (when specified, see 3.1) (see 3.6.10.3). The oscillator shall be frequency-adjusted and then subjected to a one-half temperature cycle, as specified in 4.8.10.1, with each of the three frequency-adjusted conditions as defined in 4.8.10.3. The frequency-temperature stability shall be determined by:

$$\text{f-T stability} = \pm \text{ MAX } [\delta f1, \delta f2, \delta f3]$$

where MAX [ ] is the maximum value among $\delta f1$, $\delta f2$, and $\delta f3$.

$\delta f1$, $\delta f2$, and $\delta f3$ are computed as follows:

$$\delta f1 = (f1_{max} - f1_{min})/(f1_{max} + f1_{min})$$

$$\delta f2 = (f2_{max} - f2_{min})/(f2_{max} + f2_{min})$$

$$\delta f3 = (f3_{max} - f3_{min})/(f3_{max} + f3_{min})$$

where f1, f2, and f3 max are the maximum frequencies measured during the temperature run under condition 1, condition 2, and condition 3, respectively, and f1 min, f2 min, and f3 min are the minimum frequencies measured during the temperature runs under condition 1, condition 2, and condition 3, respectively. If specified, a frequency versus temperature curve shall be generated in the format specified. Test details of 4.8.10.1 shall apply.

4.8.11.4 Frequency-temperature stability including hysteresis and trim effect (when specified, see 3.1) (see 3.6.10.4). The oscillator shall be frequency-adjusted and subjected to a complete temperature cycle, as specified in 4.8.10.2, with each of the three frequency-adjusted conditions. The frequency-temperature stability shall be determined as in 4.8.11.3. If specified, a frequency-temperature curve shall be generated in the format specified. The test details of 4.8.10.1 shall apply.

4.8.12 Frequency-temperature slope at reference temperature (when specified, see 3.1) (see 3.6.11). The oscillator shall be frequency-adjusted and subjected to a one-half temperature cycle, as specified in 4.8.10.1 with a lower temperature limit of Tref -2°C and upper temperature limit of Tref +2°C, unless otherwise specified. The temperature step shall be less than +1°C. The slope at the reference temperature shall be the slope of the best straight line through the set of measurement points, obtained by using the method of least squares. This test may be combined with 4.8.11.1, 4.8.11.2, 4.8.11.3, or 4.8.11.4 as applicable.

Downloaded from http://www.everyspec.com

4.8.13 Frequency-thermal transient stability (when specified, see 3.1) (see 3.6.12). The thermal response time and overshoot (or undershoot) of the transient frequency excursion resulting from the specified thermal excitation shall be measured in accordance with the following procedure:

a. The unenergized oscillator shall be placed in the temperature chamber and allowed to reach equilibrium at the specified initial temperature T_1. The oscillator shall then be energized and allowed to stabilize for the specified time interval under normal operating conditions. At the end of this period, the chamber temperature shall be changed at the specified rate to the final temperature T_2. The oscillator output frequency and the environmental temperature (as measured at the reference point) should be continuously recorded during and after this operation, resulting in a plot of both frequency change and temperature similar to that on figure 3. The thermal response time and the overshoot may be determined from this plot.

(1) The overshoot of the transient excursion may be specified either in fractional parts of the nominal frequency (i.e., the overshoot should not exceed 2×10^{-7}), or as a percentage of the steady-state frequency offset, i.e., according to the relation:

$$\text{overshoot (\%)} = \frac{f_{max} - f_{final}}{f_{final} - f_{initial}} \times 100$$

(2) Unless otherwise specified, the thermal response time is the time interval between the instant the frequency has changed 10 percent of the overall change, and the instant the frequency has attained a value within 10 percent (of the change) of its final frequency. There are two possible cases, as shown by the sample recordings on figure 3.

(a) When the overshoot is less than 10 percent, the thermal response time is equal to $t_2 - t_1$ minutes.

(b) When the overshoot is equal to or greater than 10 percent, the thermal response time is equal to $t_3 - t_1$ minutes.

b. The following details shall apply:

(1) Initial and final reference point temperatures: As specified (see 3.1).

(2) Rate of change of reference point temperature: As specified (see 3.1).

(3) Precise location of temperature sensor reference point: As specified (see 3.1).

c. Precautions:

(1) The temperature sensor should be positioned so as to record the reference point temperature at the specified location. Both sensor location and temperature ramp must be accurately defined in order to obtain reproducible results.

(2) Response time of the frequency measuring system (whether analog or digital) must be short compared with the maximum rate of change of frequency exhibited by the oscillator under test.

Downloaded from http://www.everyspec.com

4.8.14 Frequency-voltage tolerance (see 3.6.13). The frequency-voltage tolerance shall be determined from measurement of output frequency when the oscillator supply voltage and oven supply voltage (when applicable), is adjusted to its specified nominal value, to its minimum value and to its maximum value (see 3.6.2.1 and 3.6.2.2). Sufficient stabilization time shall be allowed between adjustment of supply voltage and measurement of frequency. The frequency-voltage tolerance shall be determined by:

f-V tolerance = $\pm$ MAX [δf_{max}, δf_{min}]

where MAX [ ] is the maximum value among δf_{max} and δf_{min}.

δf_{max} and δf_{min} are computed as follows:

δf_{max} = *(f_{max} - f_{ref})/f_{ref}*

δf_{min} = *(f_{min} - f_{ref})/f_{ref}*

where f_{max} is the maximum frequency measured, f_{min} is the minimum frequency measured and f_{ref} is the reference frequency at nominal supply voltage.

4.8.15 Frequency-load tolerance (when specified, see 3.1) (see 3.6.14). The frequency-load tolerance shall be determined from measurement of output frequency at specified nominal load conditions, minimum load conditions and maximum load conditions. Any impedance appearing across the output terminals which results from connection to the measurement system must be included in the total electrical load value. The frequency-load tolerance shall be determined as specified in 4.8.14 where f_{ref} is the reference frequency at nominal load.

4.8.16 Retrace (when specified, see 3.1) (see 3.6.15). The retrace shall be measured in accordance with the procedure illustrated on figure 4. The oscillator shall be operated at the specified test temperature and when stabilized, the frequency, f_1, shall be recorded. The oscillator shall then be turned off and maintained at the specified test temperature for a specified time period (t_3 - t_2). At the end of this period, power shall again be applied and the frequency recorded as a function of time. The retrace error is the frequency difference between the frequency at the time of turn off (f_1 at t_2) and the frequency at the specified time after turn on (e.g., f_3 at t_4 or f_2 at t_5). The measurement temperature shall be as specified (see 3.1).

4.8.17 Short-term stability (when specified, see 3.1) (see 3.6.16).

4.8.17.1 Phase noise, steady-state (when specified, see 3.1) (see 3.6.16.1). The phase noise $\mathcal{L}(f)$ shall be measured under quiescent conditions in accordance with NIST Technical Note 1337 and the test configuration of figure 5.

Precaution: The presence of amplitude noise (AM noise) on the signal may affect phase noise measurements depending upon the degree of AM noise suppression at the phase detector. After passing through the phase detector, the AM noise should be at least 10 dB below the phase noise in order to allow valid phase noise test results.

4.8.17.2 Phase noise, random vibration (when specified, see 3.1) (see 3.6.16.2). The oscillator shall be subjected to random vibration (operating) specified in 4.8.39.4. The phase noise $\mathcal{L}(f)$, shall be measured in accordance with NIST Technical Note 1337 and the test configuration of figure 5 for the random vibration levels and spectra specified. The phase noise, expressed as $\mathcal{L}(f)$, in dBc/Hz, as defined in 6.4.34 and 6.4.35, shall not exceed the values specified.

Downloaded from http://www.everyspec.com

4.8.17.3 Phase noise, acoustic (when specified, see 3.1) (see 3.6.16.3). The oscillators shall be subjected to "acoustic noise (operating)" specified in 4.8.40. The phase noise $\mathcal{L}(f)$, shall be measured in accordance with NIST Technical Note 1337 and the test configuration of figure 5 for the acoustic noise intensities and spectra specified. The phase noise, expressed as $\mathcal{L}(f)$, in dBc/Hz, as defined in 6.4.35, shall not exceed the values specified.

4.8.17.4 Amplitude noise (when specified, see 3.1) (see 3.6.16.4). The amplitude noise, $S_a(f)$, shall be measured in accordance with the configuration of figure 6 and the following procedure (see F.L. Walls, et al., "Accuracy Model for Phase Noise Measurements," Proc. 21st PTTI Meeting 1989):

Step 1 - Calibration of AM detector and amplifier gain.

The conversion sensitivity of the AM detector and the amplifier gain shall be determined at the nominal frequency and power level of the oscillator under test using a calibration source that is sinusoidally modulated at frequency f_c. Connect the calibration source so that the detected dc level at the detector output (test point A on figure 6) is the same as for the oscillator under test. The calibration signal is of the form,

$$V = V_o[1 + A_o \cos 2\pi f_c t] \cos 2\pi \nu_o t$$

where 100 x A_o is the percentage modulation and $A_o^2/2$ is the relative power at the modulation frequency (assuming $A_o << 1$ and the detector is linear). The power measured by the spectrum analyzer at frequency f_c, denoted by $P_o(\nu_o, V_o, f_c)$, is given by

$$P_o(\nu_o, V_o, f_c) = \frac{A_o^2}{2} G^2(f_c) k_{AM}^2(\nu_o, V_o, f_c)$$

where $G^2(f_c)$ is the square of the voltage gain of the amplifier frequency f_c and $k_{AM}^2(\nu_o, V_o, f_c)$ is the conversion sensitivity of the detector. Therefore,

$$G^2(f_c)\, k_{AM}^2(\nu_o, V_o, f_c) = \frac{2 P_c(\nu_o, V_o, f_c)}{A_0^2}$$

Step 2 - Oscillator AM measurement.

Connect the oscillator under test to the detector. Record the spectrum. Correct the measured spectrum to $S_a(f)$ using $G^2 K_{AM}^2$ product measured in step 1, that is

$$S_a(f) = \frac{P_o(\nu_o, V_o, f_c)}{G^2(f_c) k_{AM}^2(\nu_o, V_o, f_c)}$$

4.8.17.5 Allan deviation (when specified, see 3.1) (see 3.6.16.5). The Allan deviation shall be determined in accordance with NIST Technical Note 1337 using 100 samples and the test configuration of figure 6.

Precaution: Systematic effects, if significant and not removed, will bias results in Allan deviation measurements (see "Treatment of Systematic Variations," NIST Technical Note 1337). Therefore, the contribution of frequency aging must be properly subtracted from the measurements for high aging rate oscillators or at long sample times (τ's) in order for $\sigma_\gamma(\tau)$ to be a valid measure of random frequency fluctuations.

Downloaded from http://www.everyspec.com

4.8.18 Acceleration sensitivity (when specified, see 3.1) (see 3.6.17).

4.8.18.1 Acceleration sensitivity, steady-state (when specified, see 3.1) (see 3.6.17.1). The oscillator shall be subjected to "acceleration (operating)" specified in 4.8.42.2. Measurements shall be made at least five equally spaced acceleration levels between 20 percent of the maximum and the maximum specified. The frequency change per unit g of acceleration shall be determined graphically for all acceleration levels to the maximum specified. The following details shall apply:

a. Test configuration: See figure 5.

b. Acceleration level: As specified (see 3.1).

c. Orientation (direction): As specified (see 3.1).

4.8.18.2 Acceleration sensitivity, 2 g tip-over (when specified, see 3.1) (see 3.6.17.2). Three mutually perpendicular axes shall be defined relative to the external oscillator package. For each of the three axes, the following procedure shall be followed.

a. Position the oscillator with the ith axes vertical and the unit vector parallel to the positive ith axis pointing upward.

b. Record the frequency and call if f_i^+.

c. Position the oscillator with the ith axis vertical and the unit vector parallel to the negative ith axis pointing upward.

d. Record the frequency and call it f_i^-.

e. Calculate $\gamma_i = \left(\frac{f_i^+ - f_i^-}{f_i^+ + f_i^-}\right)$.

After all three axes are measured, calculate the magnitude and direction of the acceleration sensitivity vector, Γ, as follows:

$$|\Gamma| = \sqrt{\gamma_1^2 + \gamma_2^2 + \gamma_3^2} \qquad \text{and} \qquad \overline{\Gamma} = \gamma_1 \hat{i} + \gamma_2 \hat{j} + \gamma_3 \hat{k}$$

where i, j, and k are the unit vectors parallel to the positive direction of axis 1, axis 2, and axis 3 respectively.

Precaution: Care must be taken to ensure that the observed frequency changes are not due to gravitation-induced- thermal-convection-current changes within the oscillator. This condition is guarded against by performing the position change and frequency measurement as rapidly as possible. Verification is obtained by repeatable measured frequency changes following repetitive position changes inasmuch as the changes due to altered convection currents are generally not repeatable.

Downloaded from http://www.everyspec.com

4.8.18.3 Acceleration sensitivity, vibration (when specified, see 3.1) (see 3.6.17.3).

4.8.18.3.1 Acceleration sensitivity, sinusoidal vibration. The oscillator shall be subjected to vibration, sinusoidal (operating), specified in 4.8.39.2. A sinusoidal excitation shall be applied to the vibration machine at a level not to exceed 20 g's or the value specified. The frequency of vibration, f_v, shall be varied over the frequency range specified in a logarithmic progression of not fewer than 7 frequencies per decade. At each vibration frequency, the relative sideband intensity (i.e., the ratio of the power in the upper vibration induced sideband to the power at the unmodulated signal frequency) shall be determined. The acceleration sensitivity at each vibration frequency shall be determined from the following:

$$y_i = \frac{2 f_v 10^{(I_i(f_v)/20)}}{a_i \nu_0}$$

where,

y_i = Acceleration sensitivity along axis i (i = 1, 2, or 3)

f_v = Vibration frequency

a_i = Acceleration frequency

ν_0 = Carrier frequency

$I_i(f_v)$ = Relative sideband intensity (power ratio) in dBc (see 6.4.34) when the vibration at frequency f_v is along the i axis.

The acceleration sensitivity for each axis is the maximum value measured for any vibration frequency in the range specified. The above procedure is repeated for two other axes such that the three axes are mutually perpendicular. The magnitude and direction of the acceleration sensitivity vector, Γ, shall be calculated as specified in 4.8.18.2.

The following details shall apply:

a. Test configuration: See figure 5.

b. Vibration level: As specified (see 3.1).

c. Vibration frequency range: As specified (see 3.1).

4.8.18.3.2 Acceleration sensitivity, random vibration. It is acceptable to assume that the acceleration sensitivity under random vibration is the same as under sinusoidal vibration. The sinusoidal vibration test method detailed in 4.8.18.3.1 is preferred for measuring the acceleration sensitivity of a crystal oscillator in a vibrating environment.

4.8.19 Magnetic field sensitivity (when specified, see 3.1) (see 3.6.18).

4.8.19.1 Magnetic field sensitivity, dc (see 3.6.18.1). The energized oscillator shall be subjected to "magnetic field, (operating)" specified in 4.8.44. Maximum sensitivity to dc magnetic field shall be determined from measurement of output frequency as a function of dc magnetic field in the most sensitive (i.e., worst case) direction.

Downloaded from http://www.everyspec.com

4.8.19.2 Magnetic field sensitivity, ac (see 3.6.18.2). The oscillator shall be subjected to the "magnetic field, (operating)" specified in 4.8.44. Maximum sensitivity to an alternating magnetic field shall be determined from measurement of the magnitude of the frequency modulation at the specified field strength and frequencies in the most sensitive (i.e., worst case) direction. At each frequency the relative sideband intensity, $I(f_\mu)$, shall be measured. The alternating magnetic field sensitivity, Γ_M, shall be determined from:

$$\Gamma_M = \frac{2 f_\mu 10^{(I(f_\mu)/20)}}{H \nu_o}$$

where:

Γ_M = Magnetic field sensitivity

f_μ = Alternating magnetic field frequency

H = Peak magnetic field strength in amperes/meter

ν_o = Carrier frequency

$I(f_\mu)$ = Relative sideband intensity in dBc (see 6.4.34).

4.8.20 Output waveform (see 3.6.19). The type of output waveform shall be verified.

4.8.21 Output voltage-power (see 3.6.20).

4.8.21.1 Output voltage (see 3.6.20.1). The rms or peak-to-peak output voltage shall be measured across the specified load (see 3.1). For voltage controlled crystal oscillators, the modulation-control input voltage shall be turned off for this measurement and the dc input reference level shall be as specified (see 3.1).

4.8.21.2 Output power (sinusoidal waveform) (see 3.6.20.2). The output power shall be measured across the specified load (see 3.1). The output power is calculated from the rms output voltage and a knowledge of load impedance or, alternately, it may be read directly from an appropriate power meter. For voltage controlled oscillators, the modulation-control input voltage shall be turned off for this measurement and the dc input reference level shall be as specified (see 3.1).

4.8.21.3 Output logic voltage levels (square wave output waveform) (see 3.6.20.3). The output logic voltage levels (see figure 8) shall be measured across the specified load (see 3.1). Unless otherwise specified, test loads for TTL and CMOS compatible oscillators shall be as shown on figure 9.

Note: The measurements shall be referenced from ground (0 V dc) to the flat portion of each level, disregarding overshoot, undershoot, or ringing, if these can be traced to inductance external to the oscillator as shown on figure 8.

4.8.22 Rise and fall times (square wave output waveform) (see 3.6.21). The rise and fall time measurements shall be made between the specified voltage levels (see figure 8). Unless otherwise specified (see 3.1), rise and fall time measurement levels for TTL and CMOS compatible oscillators shall be as specified in table VIII. For ECL and other logic families, the measurement levels shall be as specified (see 3.1).

Downloaded from http://www.everyspec.com

TABLE VIII. Rise and fall time measurement levels.

Compatible logic	Lower measurement level	Upper measurement level
TTL	0.8 volt	2.0 volts
CMOS	10% of signal level	90% of signal level

4.8.23 Duty cycle (square wave output waveform) (see 3.6.22). The measurement of duty cycle expressed as a percent of one waveform period shall be made at the 50 percent voltage level (referenced to ground) (see figure 8). Unless otherwise specified (see 3.1), the duty cycle measurement level for TTL and CMOS compatible oscillators shall be as specified in table IX.

TABLE IX. Duty cycle measurement level.

Compatible logic	Measurement level
TTL	1.4 volts
CMOS	50% $V_{peak\text{-}to\text{-}peak}$

4.8.24 Harmonic and subharmonic distortion (when specified, see 3.1) (see 3.6.23). The harmonic and subharmonic distortion within the bandwidth, as specified (see 3.1), shall be measured as follows:

The circuit is set up as shown on figure 1; the spectrum analyzer is set to display a frequency range which will embrace the appropriate harmonics and subharmonics of the oscillator.

In an ideal case, the spectrum of the oscillator will appear as on figure 10. The spectrum of an oscillator with severe harmonic distortion only, and one which has severe harmonic and subharmonic distortion is shown on figure 10. The spectra may be measured (usually directly in decibels from the spectrum analyzer) as a power ratio with respect to the carrier power, expressed in decibels or alternatively with percentage distortion of, for example, the third harmonic may be quoted as follows:

$$D_3 = \frac{100}{10^{d3/20}}$$

Where:

D_3 = percentage of third harmonic distortion.

d_3 = difference in level of fundamental and third harmonic (in decibels) as measured on the spectrum analyzer.

Precautions: Care must be taken to ensure that the distortion is not produced in the input mixer of the spectrum analyzer.

Nonlinear distortion (having the appearance of harmonic distortion) will be produced if the input mixer is overloaded. This point may be checked by placing an attenuator between the oscillator and the spectrum analyzer and taking measurements at various power levels. The attenuator setting should not effect the percentage of harmonic distortion.

Downloaded from http://www.everyspec.com

NOTE: The total harmonic distortion may be obtained from a summation of the individual harmonically related responses as follows:

$$D_{TOTAL} = 100[10^{-d2/10}+10^{-d3/10}]^{-1/2}$$

4.8.25 Spurious response (when specified, see 3.1) (see 3.6.24). The nonharmonic related spurious response within the bandwidth, as specified (see 3.1), shall be measured similar to that specified in 4.8.24.

Precaution: In the event of high level signals in the environment in which the oscillator is being tested, care should be taken to screen the measurement system to eliminate signal picked up from the operating environment.

4.8.26 Output impedance (when specified, see 3.1) (see 3.6.25). The output impedance shall be measured as follows:

a. Load the oscillator output with a precision ($\pm$1 percent nonreactive) resistor. R_L = specified load minus 10 percent.

b. Measure output voltage e_L.

c. Load the oscillator output with a precision ($\pm$1 percent nonreactive) resistor. R_H = specified load plus 10 percent.

d. Measure output voltage e_H.

e. Calculate the output impedance.

$$Z = \frac{R_L R_H (e_H - e_L)}{e_L R_H - e_H R_L}$$

4.8.27 Re-entrant isolation (multi-output oscillators) (when specified, see 3.1) (see 3.6.26). The isolation between output ports of an oscillator having two or more outputs shall be measured in accordance with the test configuration on figure 11 and the following procedure:

a. Connect the 20 dB pads on the output of the RF generator to the 20 dB pad at the input of the spectrum analyzer (or selective voltmeter). Adjust the output of the RF generator to the specified level and frequency. Note the level on the spectrum analyzer.

b. The 20 dB pads at the output of the RF generator and input of the spectrum analyzer (or selective voltmeter) are connected to their appropriate ports. The level is measured on the analyzer as in 4.8.27a.

c. The ratio of the two signals measured with and without the shorting link (usually expressed in decibels) is the re-entrant isolation between the appropriate ports, at the re-entrant signal frequency. The following details shall apply:

(1) Test configuration: See figure 11.

(2) Measurement frequency: As specified (see 3.1).

(3) Level of test signal: As specified (see 3.1).

Downloaded from http://www.everyspec.com

Precautions: Care must be taken to prevent overloading of the spectrum analyzer (or selective voltmeter) as this will cause signal limiting and an apparent reduction in re-entrant isolation.

If isolation is to be measured at a frequency which is a harmonic of the oscillator, then a pessimistic value of re-entrant isolation will be obtained. However, if the harmonic level is considerably lower than the isolation to be measured, a usable result can still be achieved. Where the harmonic content of the output signal is high, it will be necessary to disable the oscillator (i.e., cause the oscillator to cease oscillation while still remaining energized) before measurements can be made.

4.8.28 Output suppression (gated oscillator) (when specified, see 3.1) (see 3.6.27). The output suppression for gated oscillators shall be determined by measurement of the reduction in output level when the output stage is cutoff by a gating signal as follows:

a. The specified signal necessary to gate the output of the oscillator "ON" shall be applied, and the level of the output at its fundamental frequency, and at any harmonic frequency as specified, measured on the spectrum analyzer.

b. The specified signal necessary to gate the output of the oscillator "OFF" shall then be applied, and the new output level noted.

c. The output suppression at a particular frequency is the ratio of the output levels in the "ON" and "OFF" states, usually expressed in decibels. The following details shall apply:

(1) Test configuration: See figure 12.

(2) Measurement frequency: As specified (see 3.1).

(3) Details of "ON" and "OFF" gating signals: As specified (see 3.1).

Precaution: Care must be taken to prevent overloading of the spectrum analyzer as this will cause signal limiting and an apparent reduction in output suppression.

4.8.29 Startup time (when specified, see 3.1) (see 3.6.28). Unless otherwise specified, the startup time shall be measured using an oscilloscope synchronized to the switched supply voltage. The following details shall apply:

a. Test configuration: See figure 13.

b. Ramp rate: From 0.0 V dc to nominal supply voltage in 100 microseconds or less, unless otherwise specified, (see 3.1).

4.8.30 Modulation-control input impedance (type 2, type 5, and type 6) (see 3.6.29). The modulation-control input impedance shall be determined as follows: The specified modulation-control input voltage (see 3.6.2.3) shall be connected to the input terminals through a series resistance of known value "R_o". The voltage across the series resistor "E_r" and the voltage across the input terminals "E_m" shall be measured. The magnitude of the input impedance may then be calculated as follows:

$$Z_i = R_o \frac{E_m}{E_r}$$

Downloaded from http://www.everyspec.com

4.8.31 Frequency deviation (type 2 type 5, and type 6) (see 3.6.30).

4.8.31.1 Total frequency deviation, dc control (see 3.6.30.1). The total frequency deviation for the specified static dc control input voltage (see 3.6.2.3) shall be determined as follows:

a. Assemble test equipment in accordance with figure 14. Connections shall be made at "B", "D", and "G".

b. Set the variable voltage power supply to the end-point voltages and reference voltage specified.

c. Record frequencies at each voltage above.

d. The difference between frequencies in 4.8.31.1c above shall not exceed the deviation limits specified (see 3.1). If the limits are not specified, the specification is considered a minimum.

4.8.31.2 Total deviation, modulation (when specified, see 3.1) (see 3.6.30.2). The total frequency deviation for the specified modulation control input voltages and frequency (see 3.6.2.3) shall be determined as follows:

a. Assemble test equipment in accordance with figure 14. Connections shall be made at "A", "D" (or "C" and "E" when the VCXO under test does not possess adequate deviation for reading on the modulation meter), and "F".

b. Set the modulation signal generator to the input voltage level frequencies specified.

c. Set the FM modulation meter to the scale and range specified. The FM modulation meter will indicate the total frequency deviation of the VCXO for the modulation voltage and frequencies specified.

d. The deviation shall not exceed the limits specified (see 3.1). If the limits are not specified, the specification is considered a minimum.

4.8.31.3 Deviation (slope) sensitivity (when specified, see 3.1) (see 3.6.30.3). The deviation (slope) sensitivity within the total deviation range shall be determined as follows:

a. Assemble test equipment in accordance with figure 14. Connections are to be made at point "B", point "D", and point "G".

b. The control voltage range shall be divided into 10 equally spaced voltage steps or 0.5 volt increments, whichever gives the greatest number of voltage settings.

c. Record frequencies at each of the voltage steps in 4.8.31.3b above. Deviation sensitivity is determined as follows: Sequentially subtract each frequency reading from the next. This difference, when divided by the voltage increment, will yield the sensitivity in equivalent units per volt. The results of each mathematical operation shall not exceed the limits specified (see 3.1).

4.8.31.4 Deviation slope polarity (see 3.6.30.4). The frequency deviation slope polarity of the frequency-control voltage transfer characteristic shall be determined as follows:

a. Assemble the test equipment in accordance with figure 14. Connections are to be made at point "B", point "D", and point "G".

b. Set the variable voltage power supply to a voltage within the control range of the VCXO under test and record frequency.

c. Adjust the variable voltage power supply to a voltage more positive than that in 4.8.31.4b above and record frequency.

d. Subtract frequency obtained in step 4.8.31.4b from step 4.8.31.4c. If the result is positive, the VCXO has positive slope. If the result is negative, the slope is negative.

e. The slope polarity shall be as specified (see 3.1).

Downloaded from http://www.everyspec.com

4.8.31.5 Deviation linearity (see 3.6.30.5). The frequency deviation linearity of the frequency-control voltage transfer characteristic shall be determined by fitting a best straight line as follows:

a. Assemble test equipment in accordance with figure 14. Connections are to be made at point "B", point "D", and point "G".

b. The control voltage range shall be divided into 10 equally spaced voltage steps or 0.5 volt increments, whichever gives the greatest number of voltage settings.

c. Record frequencies at each of the voltage steps in 4.8.31.5b.

d. Apply the method of least squares to obtain a "best" straight line through the set of measurement points obtained in 4.8.31.5c above (see figure 15). The deviation linearity shall be determined from the following:

$$\%linearity = \pm \frac{F_{MAX} \; x \; 100}{D_T}$$

Where $\pm F_{max}$ is the maximum frequency difference existing between the actual and fitted F-V characteristics and D_T is the actual total frequency deviation.

e. The linearity shall not exceed the value specified.

4.8.31.6 Modulation distortion (when specified, see 3.1) (see 3.6.30.6). The frequency modulation distortion resulting from the nonlinearity of the dynamic modulation transfer characteristic shall be as follows:

a. Assemble test equipment in accordance with figure 14. Connections are to be made at point "A", point "D", point "F" and point "H".

b. Set the modulation signal generator to the voltage level and frequency specified.

c. Set the FM modulation meter to approximate range and scale.

d. Set the distortion analyzer to range and scale for each frequency to be measured.

e. The distortion analyzer will indicate the harmonic content of the demodulated waveform from the VXCO under test. The value of harmonic content indicated shall not exceed the limits specified (see 3.1).

Precaution: Any distortion introduced by the detector of the modulation meter must be low compared with that of the oscillator under test.

4.8.31.7 Modulation frequency response (when specified, see 3.1) (see 3.6.30.7). The modulation frequency response shall be determined as follows:

a. Assemble test equipment in accordance with figure 14. Connections are to be made at point "A", point "D", and point "F".

b. Determine an adequate number of modulation frequency settings evenly spaced between the modulation reference and the cutoff frequency or at frequencies specified (see 3.1).

c. Set the modulation signal generator output signal to those frequencies determined in 4.8.31.7b above and to an amplitude which will result in the required frequency deviation.

d. Record the readings obtained on the FM modulation meter at each of the frequencies above. A table or plot of the deviation versus modulation frequency will yield the frequency response characteristic of the VCXO under test. The resulting characteristic shall be flat to within 3 dB, unless otherwise specified (see 3.1).

4.8.32 Accumulated time error (when specified, see 3.1) (see 3.6.31). The oscillator shall be subjected to the specified time variant conditions. The time integral of the induced frequency offset, for the specified time interval shall be determined.

Downloaded from http://www.everyspec.com

4.8.33 Clock accuracy (type 7) (see 3.6.32).

4.8.33.1 Clock accuracy (corrected pulse train output) (see 3.6.32.1). The oscillator shall be subjected to the specified operating conditions (temperature, supply voltage, acceleration, radiation, etc). The clock accuracy shall be determined by measurement of time error (or time errors, if effects are tested for separately) over the specified interval (or fraction thereof, if resulting frequency offset is constant) under the worst case combination of operating conditions.

4.8.33.2 Clock accuracy (digital time-of-day output) (see 3.6.32.2). The clock accuracy shall be determined as specified in 4.8.33.1.

4.8.34 BIT (type 4 and type 6) (when specified, see 3.1) (see 3.6.33).

4.8.34.1 BIT, oven operating temperature (when specified, see 3.1) (see 3.6.33.1). The oven supply current (or total OCXO current if a single supply) and BIT output voltage shall be continuously recorded during warm-up until the output frequency has stabilized within the specified tolerance. Unless otherwise specified (see 3.1), the transition from "fault" to "operational" condition shall occur in the region where the oven supply current has decreased to within 10 percent of its final quiescent value. The BIT output voltage shall not exceed the limits specified. The following details shall apply:

a. BIT output load: As specified (see 3.1).

b. Measurement temperature: As specified (see 3.1).

NOTE: The above test provides only a verification of BIT capability for indicating operational-readiness of a satisfactorily performing OCXO. The test does not guarantee BIT capability for indicating a fault condition to result from subsequent oven component failure or degradation. This assurance can be provided by a manufacturing in-process-test simulating oven component failure or degradation, e.g., adjusting OCXO oven temperature and measuring low and high trip temperature. If specified, a manufacturing in-process test shall be performed for each oscillator produced and the measured trip-set point temperature differential for the oven fault sensing circuit shall be as specified (see 3.1). The BIT manufacturing in-process test method to be employed shall be approved by the qualifying activity.

4.8.34.2 BIT, oven supply voltage (when specified, see 3.1) (see 3.6.33.2). The oven supply voltage shall be removed from the energized OCXO to simulate the transition from an "operational" to "fault" condition. The BIT output voltage shall not exceed the limits specified. The test details of 4.8.34.1 shall apply.

4.8.34.3 BIT, RF output voltage (when specified, see 3.1) (see 3.6.33.3). Transition from an "operational" to "fault" condition shall be simulated by varying the RF output circuit load such that the output voltage is decreased through a threshold level as specified (see 3.1). It shall be determined by voltage measurement that the transition occurs at the specified threshold level. The BIT output voltage shall not exceed the limits specified. The test details of 4.8.34.1 shall apply.

Downloaded from http://www.everyspec.com

4.8.35 Frequency aging (see 3.6.34).

4.8.35.1 Frequency aging (type 1 and type 2) (see 3.6.34.1). Measurement of frequency aging for nonoven-nontemperature-compensated crystal oscillators shall be as follows:

The oscillator shall be maintained at the specified temperature, tolerance and stability for a continuous period of 30 days. After insertion into the oven, the oscillator shall be allowed to equilibrate with chamber air temperature. Then the oscillator shall be energized and stabilized for 1 hour prior to beginning the measurement acquisition cycle. The initial frequency of the oscillator shall be measured immediately after the stabilization period (1 hour) and thereafter at intervals not to exceed 72 hours (except one maximum interval of 96 hours per 30-day period is permitted) for a minimum of 30 days. The frequency change between this initial frequency and all subsequent frequencies measured within the 30-day period shall not exceed the maximum frequency change specified. The following details shall apply:

a. Aging temperature: +70°C or highest specified operating temperature, whichever is lower.

b. Aging temperature tolerance: ±3°C (unless otherwise specified, see 3.1).

c. Aging temperature measurement tolerance (stability): ±0.2°C (unless otherwise specified, see 3.1).

d. Qualification information in support of meeting the projected aging performance requirement shall consist of either of the following:

   (1) Frequency aging measurements of at least five oscillators of the same or similar design and frequency over the period specified.

   (2) Total frequency change over the period specified determined on a controlled sample of at least five oscillators, using the curve fitting procedure of 4.8.35.2, where the turnover temperature was selected to correspond to the specified aging temperature.

e. If a projected total frequency change for a period (such as 1 year) is specified, the measurement periods shall be 30 days or longer, and a linear extrapolation shall be used from the end of the aging measurement period using the coefficients determined from a least squares fit to the measurements, as described in 4.8.35.2.1.

4.8.35.2 Frequency aging (type 3, type 4, type 5, type 6, type 7, and type 8) (see 3.6.34.2).

4.8.35.2.1 Frequency aging (type 3, type 5, and type 7). Measurement of frequency aging for temperature compensated crystal oscillators shall be for aging measurement periods of 30 days or longer (unless otherwise specified). The test procedure shall be as follows:

After insertion into the oven, the crystal oscillators shall be stabilized at an aging temperature for 48 hours prior to beginning the measurement acquisition (unless otherwise specified). The frequency of each unit shall be measured immediately after the stabilization period, and then a minimum of four times per week at intervals of at least 20 hours. The measurements obtained shall be fit using the method of least squares to the function:

$$f(t) = A(\ln(Bt + 1)) + f_o$$

where f(t) is the frequency of the crystal oscillator, t days after the start of the aging cycle (the time origin for measurements analysis shall be the beginning of the stabilization period), and A, B, and f_o are constants to be determined from the least squares fit.

For monotonic aging, all the measurements shall be used for the curve fitting. If the aging trend is not monotonic, the measurement period shall be extended to 40 days or longer after the extremum in the aging trend, and the measurements from 12 days after the extremum is reached to the end of the aging measurement period shall be fit to the above function (unless otherwise specified).

Downloaded from http://www.everyspec.com

The total frequency change and the aging rate at the end of the specified period shall be determined from the above equation using the constants determined from the least squares fit. The square root of the least squares fit variance of the measurements from the curve-fit function shall not exceed 5 percent of the total aging change allowed during the test period. The test details of 4.8.35.1 shall apply except the aging temperature measurement tolerance (stability) is not specified.

The projected total frequency change for one year, unless otherwise specified (see 3.1), shall be determined by means of a linear extrapolation from the end of the aging measurement period using the coefficients determined from the least squares fit. That is, for the total aging measurement period of T_a, in days (where T_a is 30 days or longer).

$$\Delta f\,(1\,yr) = \frac{A * B}{B * T_a + 1} * (365 - T_a) + \Delta f_{T_a}$$

$$where\ \Delta f_{T_a} = A * \ln(B * T_a + 1)$$

If a projected total frequency change for a period other than one year is specified, the calculation shall be similarly performed, i.e., a linear extrapolation shall be used from the end of the aging measurement period using the coefficients determined from the least squares fit.

4.8.35.2.2 Frequency aging (type 4, type 6, and type 8). Measurements of frequency aging for oven-controlled crystal oscillators shall be conducted as specified in 4.8.35.2.1, except for the following:

a. Unless otherwise specified, OCXO shall be tested at room environment with temperature and tolerance specified (see 3.1).

b. If specified, the aging rate per day at day 30 shall also be determined from the fitted aging equation.

4.8.36 Input power aging (type 4 and type 6) (when specified, see 3.1) (see 3.6.35). The measurement of input power aging rate for hermetic or high vacuum sealed oven-controlled crystal oscillators shall be performed concurrently with the frequency aging test (see 4.8.35.2.2). The test details of 4.8.35.2.2 shall apply.

4.8.37 Conducted interference (when specified, see 3.1) (see 3.6.36). Unless otherwise specified, the conducted interference appearing on the dc lines shall be measured with adequate decoupling from the power supply by insertion of a suitable value inductor (minimum 10 ohm impedance at f_{min}) in the positive power supply line. If specified for voltage controlled oscillators, the conducted interference shall be measured at the control terminals to ground with the control terminals terminated as specified.

4.8.38 Frequency-environment tolerance (when specified, see 3.1) (see 3.6.37). The frequency-environment tolerance shall be determined from measurement of initial and final frequencies for each group C environmental test where specified (see 4.8.39 through 4.8.42, 4.8.45 through 4.8.47, and 4.8.49 through 4.8.51). The frequency-environment tolerance shall be determined by

$$f\text{ - E Tolerance} = \pm \mathrm{MAX}\ [\ \delta f_1,\ \delta f_2 \ldots\ \delta f_n\ ]$$

where MAX [ ] is the maximum value among δf_1, δf_2,... δf_n. δf_1, δf_2,... δf_n are computed as follows:

$\delta f_1 = (f_1 \text{ final} - f_1 \text{ initial})/f_1 \text{ initial}$

$\delta f_2 = (f_2 \text{ final} - f_2 \text{ initial})/f_2 \text{ initial}$

$\delta f_n = (f_n \text{ final} - f_n \text{ initial})/f_n \text{ initial}$

where f_1, f_2,...f_n initial are the initial frequencies measured before each environmental test (1,2...n) and f_1, f_2...f_n final are the final frequencies measured after each environmental test (1,2,...n).

Downloaded from http://www.everyspec.com

4.8.39 Vibration (see 3.6.38).

4.8.39.1 Vibration, sinusoidal (nonoperating) (see 3.6.38.1). The oscillator shall be tested in accordance with MIL-STD-202, method 204. The following details shall apply:

a. Method of mounting: Unless otherwise specified (see 3.1), the oscillator shall be rigidly mounted to the platform of a vibration machine. There shall be no resonance in the mounting structure, within the range of vibration frequency specified.

b. Test condition letter: As specified (see 3.1).

c. Measurements: Unless otherwise specified (see 3.1).

(1) Before test: As specified in 4.8.38.

(2) After test: As specified in 4.8.5, 4.8.21, and 4.8.38.

4.8.39.2 Vibration, sinusoidal (operating) (when specified, see 3.1) (see 3.6.38.2). The energized oscillator shall be subjected to a sinusoidal vibration test, as follows:

A sinusoidal excitation shall be applied to the vibration machine at the level specified. The frequency of vibration shall be advanced over the frequency range specified in a logarithmic progression of no fewer than 7 frequencies per decade. At each vibration frequency the specified measurements shall be performed. The following details shall apply:

a. Mounting: As specified in 4.8.39.1a.

b. Peak vibration level: As specified (see 3.1).

c. Frequency range: As specified (see 3.1).

d. Direction of motion: Three mutually perpendicular directions (unless otherwise specified, see 3.1).

e. Duration: 2 hours maximum (unless otherwise specified, see 3.1).

f. Measurements: Unless otherwise specified (see 3.1).

(1) Before test: As specified in 4.8.38.

(2) During test: As specified in 4.8.5, 4.8.18.3.1, and 4.8.21.

(3) After test: As specified in 4.8.38.

4.8.39.3 Vibration, random (nonoperating) (when specified, see 3.1) (see 3.6.38.3). The oscillators shall be tested in accordance with MIL-STD-202, method 214. The following details shall apply:

a. Mounting: As specified in 4.8.39.1a.

b. Test condition: As specified (see 3.1).

c. Duration: As specified (see 3.1).

d. Measurements: Unless otherwise specified (see 3.1).

(1) Before test: As specified in 4.8.38.

(2) After test: As specified in 4.8.38.

Downloaded from http://www.everyspec.com

4.8.39.4 Vibration, random (operating) (when specified, see 3.1) (see 3.6.38.4). The energized oscillator shall be subjected to a random vibration test, as follows:

The oscillator shall be rigidly mounted to the platform of a vibration machine. A random vibration shall be applied at the levels and frequencies of the vibration spectrum specified (see 3.1). The following details shall apply:

a. Mounting: As specified in 4.8.39.1a.

b. Power-spectral density curve: As specified (see 3.1).

c. Direction of motion: Three mutually perpendicular directions (unless otherwise specified, see 3.1).

d. Measurements: Unless otherwise specified (see 3.1).

(1) Before test: As specified in 4.8.38.

(2) During test: As specified in 4.8.5, 4.8.18.2, and 4.8.21.

(3) After test: As specified in 4.8.38.

4.8.40 Acoustic noise (operating) (when specified, see 3.1) (see 3.6.39). The energized oscillator shall be tested in accordance with MIL-STD-810, method 515, procedure I. The following details shall apply:

a. Category: As specified (see 3.1).

b. Overall sound pressure: As specified (see 3.1).

c. Exposure time: As specified (see 3.1).

d. Measurements: Unless otherwise specified (see 3.1).

(1) Before test: As specified in 4.8.38.

(2) During test: As specified in 4.8.5, 4.8.17.3, and 4.8.21.

(3) After test: As specified in 4.8.38.

4.8.41 Shock (specified pulse) (see 3.6.40).

4.8.41.1 Shock (specified pulse) (nonoperating) (see 3.6.40.1). The oscillator shall be tested in accordance with MIL-STD-202, method 213. The following details shall apply:

a. Method of mounting: The oscillator shall be attached to a rigid fixture.

b. Test condition: I (unless otherwise specified, see 3.1).

c. Number of blows: Two blows in each of the three mutually perpendicular axes.

d. Measurements: Unless otherwise specified (see 3.1).

(1) Before test: As specified in 4.8.38.

(2) After test: As specified in 4.8.2, 4.8.5, 4.8.10, 4.8.14, 4.8.21, and 4.8.38.

Downloaded from http://www.everyspec.com

4.8.41.2 Shock (specified pulse) (operating) (when specified, see 3.1) (see 3.6.40.2). The energized oscillator shall be subjected to a shock pulse test at the pulse shape, intensity, and duration specified. The following details shall apply:

a. Method of mounting: The oscillator shall be attached to a rigid fixture.

b. Shock pulse waveform: As specified (see 3.1).

c. Number and direction of shock pulses: One in each of the three mutually perpendicular axes (unless otherwise specified, see 3.1).

d. Measurements: Unless otherwise specified (see 3.1).

(1) Before test: As specified in 4.8.38.

(2) During test: As specified in 4.8.32.

(3) After test: As specified in 4.8.38.

4.8.42 Acceleration (see 3.6.41).

4.8.42.1 Acceleration (nonoperating) (when specified, see 3.1) (see 3.6.41.1). The oscillator shall be tested in accordance with MIL-STD-202, method 212. The following details shall apply:

a. Test condition C (unless otherwise specified, see 3.1).

b. Acceleration level: As specified (see 3.1).

c. Measurements: Unless otherwise specified, see 3.1.

(1) Before test: As specified in 4.8.38.

(2) After test: As specified in 4.8.2, 4.8.5, 4.8.21, and 4.8.38.

4.8.42.2 Acceleration (operating) (when specified, see 3.1) (see 3.6.41.2). The energized oscillator shall be subjected to an acceleration test as follows:

The acceleration shall be produced using a centrifuge or similar machine. A steady-state acceleration shall be applied at the specified level for the specified duration. Measurements shall be made at five equally spaced acceleration levels between 20 percent of the maximum and the maximum specified. The following details shall apply:

a. Acceleration level: As specified (see 3.1).

b. Acceleration duration: As specified (see 3.1).

c. Measurements: Unless otherwise specified (see 3.1).

(1) Before test: As specified in 4.8.38.

(2) During test: As specified in 4.8.5, 4.8.18.1, and 4.8.21.

(3) After test: As specified in 4.8.2 and 4.8.38.

4.8.43 Explosion (operating) (when specified, see 3.1) (see 3.6.42). The energized oscillator shall be tested in accordance with MIL-STD-202, method 109. The mechanical and electrical load shall be as specified (see 3.1).

Downloaded from http://www.everyspec.com

4.8.44 Magnetic field (operating) (when specified, see 3.1) (see 3.6.43). The energized oscillator shall be placed inside a Helmholtz coil pair and subjected to either a dc or alternating magnetic field, as specified. The following details shall apply:

a. Helmholtz coil: In accordance with ASTM A-698, the coil should be located at least 10 feet from any large metallic object.

b. Field calibration: At center of coil without device under test in field.

c. Magnetic field strength: 50 amperes/meter to 250 amperes/meter (0.6 Gauss to 3.2 Gauss) (unless otherwise specified, see 3.1).

d. Alternating field frequencies: As specified (see 3.1).

e. Orientation: Worst case direction (unless otherwise specified, see 3.1). A search shall be made in three dimensional space to determine the worst case direction.

f. Measurements: Unless otherwise specified (see 3.1).

(1) Before test: As specified in 4.8.38.

(2) During test: As specified in 4.8.5, 4.8.17.5, 4.8.18.1, 4.8.18.2, and 4.8.21.

(3) After test: As specified in 4.8.38.

4.8.45 Thermal shock (nonoperating) (see 3.6.44). Unless otherwise specified (see 3.1), the oscillator shall be subjected to MIL-STD-202, method 107. The following details shall apply:

a. Test condition letter B, unless otherwise specified (see 3.1).

b. Measurements: Unless otherwise specified (see 3.1).

(1) Before test: As specified in 4.8.38.

(2) After test: As specified in 4.8.5, 4.8.11, 4.8.21, and 4.8.38.

4.8.46 Ambient pressure (see 3.6.45).

4.8.46.1 Ambient pressure (nonoperating) (see 3.6.45.1). Place the unenergized oscillator in a test chamber and reduce the chamber internal absolute pressure to 1.16×10^{-4} Pascal maximum (50,000 feet) (unless otherwise specified) (see 3.1) for 12 hours at -60 °C ±2°C. At the end of this time, the test chamber shall be returned to standard atmospheric pressure and temperature. The following details shall apply.

Measurements: Unless otherwise specified (see 3.1).

(1) Before test: As specified in 4.8.38.

(2) After test: As specified in 4.8.5, 4.8.21, and 4.8.38.

4.8.46.2 Ambient pressure (operating) (when specified, see 3.1) (see 3.6.45.2). The energized oscillator shall be tested in accordance with MIL-STD-202, method 105. The following details apply:

a. Method of mounting: Normal mounting means.

b. Test condition letter: As specified (see 3.1).

c. Exposure time: 1 minute minimum or as specified (see 3.1).

d. Measurements: Unless otherwise specified (see 3.1).

(1) Before test: As specified in 4.8.38.

(2) During test: As specified in 4.8.5 and 4.8.21.

(3) After test: As specified in 4.8.38.

Downloaded from http://www.everyspec.com

4.8.47 Storage temperature (see 3.6.46). The unenergized oscillator shall be placed in the test chamber and subjected to the specified low storage temperature for a minimum of 24 hours. The oscillator shall be removed from the chamber and stored at room ambient conditions for a period of 60 minutes maximum. The unenergized oscillator shall then be placed in a test chamber and subjected to the specified high storage temperature for a minimum of 24 hours. At the end of this time, the oscillator shall be removed from the chamber and stored at room ambient conditions for 2 hours minimum.

Measurements: Unless otherwise specified (see 3.1).

(1) Before test: As specified in 4.8.38.

(2) After test: As specified in 4.8.2, 4.8.5, 4.8.10, 4.8.11, 4.8.14, 4.8.21, and 4.8.38.

4.8.48 Radiation hardness (operating) (when specified, see 3.1) (see 3.6.47). Frequency and accumulated time error measurements shall be as specified in 4.8.48.1, 4.8.48.2, and 4.8.48.3. Unless otherwise specified (see 3.1), measurements after the tests shall be as specified in 4.8.5, 4.8.10, 4.8.11, 4.8.14, 4.8.21, 4.8.22, and 4.8.23.

4.8.48.1 Total dose (when specified, see 3.1) (see 3.6.47.1). The total dose radiation testing shall be performed in accordance with MIL-STD-883, method 1019. The energized oscillators shall be subjected to the specified total dose. For total dose levels below 1 M Rad, the output frequency shall be measured within four days following irradiation (unless otherwise specified).

4.8.48.2 Dose rate (when specified, see 3.1) (see 3.6.47.2). The energized oscillators shall be subjected to the specified radiation pulse. The output frequency shall be measured during the irradiation and for the specified time subsequent to irradiation. If specified, the accumulated time error shall be measured in accordance with 4.8.32.

4.8.48.3 Neutrons (when specified, see 3.1) (see 3.6.47.3). The energized oscillators shall be subjected to the specified neutron fluence. The frequency shall be measured during irradiation and for the specified time subsequent to irradiation to allow for annealing of transient neutron effects in semiconductors. The frequency change due to any incidental other-than-neutron irradiation shall be properly accounted for.

4.8.49 Resistance to soldering heat (see 3.6.48).

4.8.49.1 Through-hole mounting packages (terminals or pins). Unless otherwise specified (see 3.1), each wire-lead terminal of the oscillator shall be tested in accordance with MIL-STD-202, method 210. The following details shall apply:

a. Test condition: C

b. Immersion: Leads shall be immersed to a point within .050 inch ±.005 inch (1.27 mm ±0.13 mm) of the case.

c. Cooling time prior to final measurements: 30 minutes minimum.

d. Measurements: Unless otherwise specified (see 3.1).

(1) Before test: As specified in 4.8.38.

(2) After test: As specified in 4.8.2, 4.8.5, 4.8.10, 4.8.11, 4.8.14, 4.8.21, and 4.8.38.

Downloaded from http://www.everyspec.com

4.8.49.2 Leadless chip carriers. Unless otherwise specified (see 3.1), each land terminal or pad terminal of the oscillator shall be tested in accordance with MIL-STD-202, method 210. The following details shall apply:

a. Test condition: B

b. Immersion: The oscillator shall be immersed to a point where all the solder lands or pads are fully submerged in the molten solder.

c. Cooling time prior to final measurements: 30 minutes minimum.

d. Measurements: Unless otherwise specified (see 3.1).

(1) Before test: As specified in 4.8.38.

(2) After test: As specified in 4.8.2, 4.8.5, 4.8.10, 4.8.11, 4.8.14, 4.8.21, and 4.8.38.

4.8.50 Moisture resistance (see 3.6.49). Oscillators shall be tested in accordance with MIL-STD-202, method 106. The following details shall apply:

a. Subcycle: Step 7b, the vibration subcycle, shall be omitted.

b. Measurements: Unless otherwise specified (see 3.1).

(1) Before test: As specified in 4.8.38.

(2) After test: As specified in 4.8.5, 4.8.11, and 4.8.38.

4.8.51 Salt atmosphere (corrosion) (see 3.6.50). The oscillator shall be tested in accordance with MIL-STD-883, method 1009. The following details shall apply:

a. Test condition: A

b. Measurements: Unless otherwise specified (see 3.1).

(1) Before test: As specified in 4.8.38.

(2) After test: As specified in 4.8.2, 4.8.5, 4.8.21, and 4.8.38.

4.8.52 Terminal strength (lead integrity) (see 3.6.51).

4.8.52.1 Terminals (see 3.6.51.1). Terminals or pins .03 inch (0.8 mm) diameter or greater shall be tested in accordance with MIL-STD-202, method 211. The following details shall apply:

a. Test condition: As specified (see 3.1).

b. Load: As specified (see 3.1).

c. Measurements (after test): As specified in 4.8.2.

4.8.52.2 Pins (see 3.6.51.2). Pins smaller than .03 inch (0.8 mm) diameter shall be tested in accordance with MIL-STD-202, method 211. The following details shall apply:

a. Test condition: C

b. Load: As specified (see 3.1).

c. Measurements (after test): As specified in 4.8.2.

4.8.52.3 Solder pads (see 3.6.51.3). Integrity of solder pad adhesion and plating for leadless crystal oscillator packages shall be tested in accordance with MIL-STD-883, method 2004. Measurements after test shall be as specified in 4.8.2.

4.8.53 Solderability (see 3.6.52). Unless otherwise ., each wire-lead terminal shall be subjected to MIL-STD-202, method 208.

Downloaded from http://www.everyspec.com

4.8.54 Resistance to solvents (see 3.6.53). Oscillators shall be tested in accordance with MIL-STD-202, method 215. The following details shall apply:

a. The marked portion of the oscillator package shall be brushed.

b. Oscillators shall be visually inspected for evidence of mechanical damage and legibility of marking.

4.8.55 Fungus (when specified, see 3.1) (see 3.6.54). Unless certification is provided, oscillators shall be tested in accordance with MIL-STD-810, method 508.

4.8.56 Internal water vapor content (see 3.5.1.3 and 6.3.1). Internal water vapor content shall be tested in accordance with MIL-STD-883, method 1018.

5. PACKAGING

5.1 Packaging. For acquisition purposes, the packaging requirements shall be as specified in the contract or order (see 6.2). When actual packaging of materiel is to be performed by DoD personnel, these personnel need to contact the responsible packaging activity to ascertain requisite packaging requirements. Packaging requirements are maintained by the Inventory Control Point's packaging activity within the Military Department or Defense Agency, or within the Military Department's System Command. Packaging information retrieval is available from the managing Military Department's or Defense Agency's automated packaging files, CD-ROM products, or by contacting the responsible packaging activity.

6. NOTES

(This section contains information of a general or explanatory nature that may be helpful, but is not mandatory.)

6.1 Intended use. The crystal oscillators covered by this specification are unique due to the fact that these devices must be able to operate satisfactorily in systems under the following demanding conditions: 20 g's vibration, 100 g's of shock, 24 hours of salt spray, and ambient pressure of 1.31 inches of mercury (70,000 feet altitude). In addition, these requirements are verified under a qualification system. Commercial components are not designed to withstand these environmental conditions.

6.2 Acquisition requirements. Acquisition documents must specify the following:

a. Title, number, date of the specification, applicable specification sheet, and the complete PIN (see 1.2.1).

b. Issue of DODISS to be cited in the solicitation, and if required, the specific issue of individual documents referenced (see 2.1).

c. Packaging requirements (see 5.1).

6.3 Qualification. With respect to products requiring qualification, awards will made only for products which are, at the time of award of contract, qualified in Qualified Products List whether or not such products have actually been so listed by that date. The attention of the contractors is called to these requirements, and manufacturers are urged to arrange to have the products that they propose to offer to the Federal Government tested for qualification in order that they may be eligible to be awarded contracts or orders for the products covered by this specification. The activity responsible for the Qualified Products List is the US Army CECOM, ATTN: AMSEL-LC-LEO-EP, Fort Monmouth NJ 07703-5023; however, information pertaining to qualification of products may be obtained from the Defense Supply Center Columbus (DSCC-VQP), 3990 East Broad Street, Columbus, Ohio 43126-5000.

Downloaded from http://www.everyspec.com

6.3.1 Correlation qualification for internal water vapor. At the manufacturer's option, if the initial test samples (three or five units) fail internal water vapor, a second complete sample may be tested at an alternate laboratory acceptable to the qualifying activity. An additional three samples will be held by the manufacturer until final disposition of the test results. If this test passes, the units and test results from both samples will be used by the qualifying activity for approval of internal water vapor qualification inspection.

6.4 Definitions, terms, methods, and symbols. For the purposes of this specification, the definitions, terms, methods, and symbols of IEEE STD 1139, IEEE STD 1193, CCIR Recommendation No. 686, MIL-STD-883, MIL-STD-202, and those contained herein apply and will be used in applicable acquisition documents wherever they are pertinent. The Government qualifying activity should interpret the definitions of 6.4 for use wherever pertinent.

Institute for Electrical and Electronic Engineers.

IEEE STD 1139 - IEEE Standard Definition of Physical Quantities for Fundamental Frequency and Time Metrology.

IEEE STD 1193 - IEEE Guide for Measurement of Environmental Sensitivities of Standard Frequency Generators.

(Applications for copies should be addressed to the Institute of Electrical and Electronic Engineers, Inc., 445 Hoes Lane, P.O. Box 459 Piscataway, NJ 08855-0459.

International Telecommunications Union (ITU).

TF Series Recommendations - Time signals and frequency standards emissions; [TF.686] Glossary

(Applications for copies should be addressed to the International Telecommunication Union, Sales and Marketing, Place des Nations, CH-1211 Geneva 20, Switzerland, Fax: +41-22-730-5194, Email: sales.online@itu.ch, Tel: +41-22-730-6141.

For the purpose of this specification, the following definitions apply.

6.4.1 Acceleration sensitivity. A vector property of the frequency-acceleration relationship for a crystal oscillator which is characterized by a single magnitude and direction. The acceleration sensitivity of a crystal oscillator is the magnitude of the acceleration sensitivity vector and is expressed as a frequency change per unit acceleration (e.g., 1 x 10^{-9}/g). The magnitude of the acceleration sensitivity vector $|\Gamma|$, is obtained by measuring the acceleration sensitivity along three mutually perpendicular directions (e.g., y_x, y_y, and y_z), and taking the square root of the sum of the squares, i.e.:

$$|\Gamma| = \sqrt{(y_x^2 + y_y^2 + y_z^2)}$$

6.4.2 Allan deviation. The preferred definition in the time domain of the oscillator short-term stability is as follows:

$$\sigma_y(\tau) = \sqrt{\frac{1}{2(M-1)} \sum_{k=1}^{M=1} (\bar{y}_{k+1} - \bar{y}_k)^2}$$

where $(\bar{y}_{k+1} - \bar{y}_k)$ are the *k*th average fractional frequency obtained sequentially, with no systematic dead time between measurements; τ is the sample time over which each measurement M is averaged; *k* is the number of frequency samples; $\sigma_\gamma(\tau)$ is the square root of the Allan deviation. (see IEEE Std 1139)

Downloaded from http://www.everyspec.com

6.4.3 Amplitude noise. The short-term amplitude stability of an oscillator in the frequency domain, characterized by the power spectral density of amplitude fluctuations, $S_a(f)$. $S_a(f)$ is defined by:

$$S_a(f) = \frac{\delta \varepsilon^2(f)}{V_0^2 BW}$$

where $\delta\epsilon^2(f)$ is the mean-squared amplitude fluctuation measured at a Fourier frequency separation, f, from the carrier in a measurement bandwidth, BW. The unit of measure of $S_a(f)$ is Hz^{-1} (e.g., $1x10^{-11}$ per Hz), or when expressed as 10 log $S_a(f)$, the unit of measure is in dBc/Hz (e.g., -110 dBc/Hz). (See F.L. Walls, et al., "Accuracy Model for Phase Noise Measurement," Proc. 21st PTTI Meeting 1989, and IEEE Std 1139).

6.4.4 Clock accuracy (type 7). The degree of conformity of a clock's rate with that of a time standard. Clock accuracy, expressed as the worst case time error that can accumulate over specified operating conditions and over a specified duration following clock synchronization (e.g., 10 milliseconds per day) is defined as follows:

$$T(t) = T_o + \int_0^t R(t)Dt + \varepsilon(t) = T_o + (R_o t + 1/2\ At^2 + \ldots) + \int_0^t E_1(t)Dt + \varepsilon(t)$$

where T_o is the synchronization error at t = o; R(t) is the rate (fractional frequency) difference between the two clocks under comparison which is equal to:

$$R_o + At + \ldots \int_0^t E_1(t)Dt;$$

R_o is R(t) at t = o; A is the linear aging rate; $E_1(t)$ is the rate difference due to environmental effects (temperature, radiation, acceleration, etc.); $\epsilon(t)$ is the error due to random fluctuations (white noise, flicker noise, etc.) which can be estimated statistically if the power laws of the noise processes are known; T is the time error at elapsed time (t) after synchronization.

6.4.5 Crystal oscillators (XO). The simplest and most general-purpose-type of crystal oscillator where the principal control element is the crystal unit. Because the XO employs no means of temperature control or compensation, it exhibits a frequency-temperature characteristic determined mainly by the crystal unit employed.

6.4.6 Deviation linearity. A measure of the output frequency-input control voltage transfer characteristic as compared to an ideal (straight line) function. It is expressed as an allowable nonlinearity in percent of specified full range deviation. This definition assumes that the actual transfer characteristic need not pass through nominal frequency at reference voltage. It is further assumed that monotonicity is present, e.g., no frequency reversals occur within the specified deviation range caused by unidirectional input voltage changes.

6.4.7 Duty cycle. The percent of time above a specified reference level (referenced to ground) with respect to the waveform period, as shown on figure 8. (Also called symmetry.)

6.4.8 Electrical-frequency-control. An oscillator with electrical-frequency-adjustment requires application of an externally derived voltage to the circuit control terminals of the oscillator.

6.4.9 External-frequency-adjustment oscillator. An oscillator whose mechanical-frequency-adjustment element is located external to the oscillator package and is usually not supplied by the oscillator manufacturer.

6.4.10 Fall time. The time observed for a logic "1" to logic "O" transition, when measured on the trailing edge of a rectangular waveform pulse, between two specified voltage levels (see figure 8).

Downloaded from http://www.everyspec.com

6.4.11 Frequency aging (long-term stability). The relationship between oscillator frequency and time when the oscillator frequency is measured under constant environmental conditions. It should be expressed as either a maximum rate after a specified time period (e.g., 1×10^{-10}/day after 30 days) or maximum total frequency change over a specified time period (e.g., 1×10^{-8}/month) or both.

Note: "Drift" is sometimes used incorrectly to express frequency change over a period of time. In previous usage, there had been a lack of standardization in specifying the operating conditions, including environment, under which drift is measured. Frequency aging should be the term for specifying frequency change over a period of time under constant environment, load and supply voltage. Other parameters, e.g., frequency-temperature stability, frequency-supply voltage tolerance, etc. should be used to separately specify a performance as a function of a single variable, which lends itself to ease in measurement. Therefore, the term drift should not be used to specify oscillator performance.

6.4.12 Frequency-environment tolerance. The maximum permissible deviation of the oscillator frequency from an initial reference frequency due to any and all specified standard environmental effects. In the general case, the frequency-environment tolerance is specified as a single magnitude. In applications where an unusual environmental condition may produce a significant permanent change in frequency, e.g., shock at a 10,000 G level, a frequency tolerance is assigned separately to the specified environmental effect.

6.4.13 Frequency-load tolerance. The maximum permissible deviation of the oscillator frequency from the frequency at specified nominal load impedance due to changes in load impedance over the specified range, other conditions remaining constant.

6.4.14 Frequency offset. The frequency difference, positive or negative, which should be added to the specified nominal frequency when adjusting the oscillator frequency at specified reference temperature and operating conditions. The purpose is to minimize the frequency deviation from nominal frequency over the operating temperature range (also called set point).

6.4.15 Frequency-temperature slope at reference temperature. The slope of an oscillator frequency-temperature characteristic at the specified reference temperature. A maximum F-T slope (e.g., $\pm 1 \times 10^{-8}/^{\circ}C$) is usually specified in applications where the difference between the specified reference temperature and the actual temperature at which calibration is performed may result in significant frequency error and degraded initial frequency-temperature accuracy (see 6.4.24).

6.4.16 Frequency-temperature stability. The maximum permissible deviation of the oscillator frequency, with no reference implied, due to operation over the specified temperature range at nominal supply and load conditions, other conditions constant.

6.4.17 Frequency-voltage tolerance. The maximum permissible deviation of the oscillator frequency from the frequency at specified nominal supply voltage due to changes in supply voltage over the specified range, other conditions remaining constant.

6.4.18 Frequency warm-up. The time, measured from the initial application of power, required for a crystal oscillator to stabilize its mode of operation within specified limits of final frequency. Final frequency is defined to occur at a specified period of time and is expressed in minutes or hours depending on the oscillator type.

6.4.19 Harmonic and subharmonic distortion. Harmonic distortion is a nonlinear distortion characterized by the generation of undesired spectral components harmonically related to the desired signal frequency. In an oscillator whose output signal is derived by multiplying a lower frequency signal to the desired output frequency, harmonics of the primary oscillator are the subharmonics of the output frequency. Each component is usually expressed as a power ratio (in decibels) relative to the output power of the desired signal (e.g., second harmonic is suppressed 30 dB, the subharmonics are all below -40 dBc).

Downloaded from http://www.everyspec.com

6.4.20 High vacuum seal. A package seal capable of maintaining an internal pressure of 1×10^{-3} torr or lower.

6.4.21 Hysteresis. When an oscillator is subjected to a complete quasi-static temperature cycle between the specified temperature limits, hysteresis is the difference between the up-cycle and the down-cycle frequency-temperature characteristics. The measure of hysteresis is the maximum value of the difference, expressed as $\pm 1/2$ of the maximum fractional frequency difference. (For example, when the worst-case difference is 6×10^{-7}, the hysteresis is expressed as $\pm 3 \times 10^{-7}$.) For purposes of MIL-PRF-55310, when hysteresis is included in the requirements, it is included in the specification of either the initial frequency-temperature accuracy (see 6.4.24) or the frequency-temperature stability (see 6.4.16). Quasi-static, means that the temperature is changed during frequency-temperature measurements in such a manner as to ensure that the frequency offsets due to thermal gradients are much smaller than the specified frequency-temperature stability, including hysteresis, or the specified initial frequency-temperature accuracy.

6.4.22 Initial accuracy at reference temperature. The maximum permissible offset of the oscillator frequency from the assigned nominal value at specified reference temperature and nominal supply voltage and load conditions, other conditions constant. For nonfrequency-adjustable (manufacturer-calibrated) oscillators, the initial accuracy at reference temperature applies at the time of manufacture and for a specified period following shipment. For frequency-adjustable (manufacturer-user-calibrated) oscillators, the initial accuracy at reference temperature applies at the time immediately following calibration by the manufacturer or user.

6.4.23 Initial frequency aging. The relationship between OCXO frequency and time for a specified period following warm-up. Initial frequency aging in crystal oscillators may be caused by various crystal and oscillator-circuit-related mechanisms (e.g., contamination transfer and stress relief inside the resonator enclosure), and changes in the thermistor. The initial frequency aging should be expressed as the maximum frequency change or maximum rate of frequency change over the specified period(s).

6.4.24 Initial frequency-temperature accuracy. The initial maximum permissible deviation of the oscillator frequency from the assigned nominal value due to operation over the specified temperature range at nominal supply voltage and load conditions, other conditions remaining constant. For nonfrequency-adjustable (manufacturer-calibrated) oscillators, the initial frequency-temperature accuracy applies at the time of manufacture and for a specified period following shipment. For frequency-adjustable (manufacturer-user-calibrated) oscillators, the initial frequency-temperature accuracy applies at the time immediately following calibration by the manufacturer or user. Initial frequency-temperature accuracy considers the combination of frequency-temperature stability and calibration related errors, and is the preferred general method for specifying the frequency-temperature performance of crystal oscillators.

6.4.25 Input power aging. The relationship between input power and time for a high-efficiency oven-controlled crystal oscillator, (e.g., a high-vacuum-sealed OCXO) which is a measure of thermal insulation degradation. It is usually expressed as a maximum percent increase in power consumption over a specified period of time (e.g., 0.1 percent/month).

6.4.26 Magnetic field sensitivity. The frequency-magnetic field relationship for a precision oscillator. The magnetic field sensitivity is expressed as a frequency change per unit of field strength (e.g., 1×10^{-11}/mT).

6.4.27 Mechanical-frequency-adjustment oscillator. An oscillator with mechanical-frequency adjustment requires physical manipulation of the oscillator variable circuit element, e.g., trimmer capacitor, potentiometer, etc.

Downloaded from http://www.everyspec.com

6.4.28 Microcomputer compensated crystal oscillator (MCXO). A microcomputer based crystal oscillator system employing external means of temperature compensation, i.e., correction is performed external to the crystal oscillator's feedback loop using techniques such as pulse deletion, digital phase shifting, etc. The MCXO output may provide either a clock driver signal, e.g., a time corrected pulse train or a spectrally clean RF reference signal, digital Time of Day (TOD), or combinations of these.

6.4.29 Modulation distortion. A measure of the nonlinearity of the dynamic output frequency-modulation voltage transfer characteristic of a voltage controlled crystal oscillator. It is expressed as an allowable percentage distortion in the demodulated output signal when frequency modulated with signals of specified amplitude and frequency.

6.4.30 Modulation frequency response. Defines the relationship between peak frequency deviation and modulation frequency as the modulation frequency is varied. It is usually expressed in dB down at a specified modulation frequency relative to a specified modulation reference frequency.

6.4.31 Oven-controlled crystal oscillator (OCXO). A crystal oscillator in which at least the crystal unit is temperature controlled within a thermally insulated enclosure, i.e., an oven, so that the temperature of the crystal is maintained substantially constant.

6.4.32 Oven-controlled/voltage controlled crystal oscillator (OCVCXO). A combination of OCXO and VCXO.

6.4.33 Overall frequency accuracy. The maximum permissible frequency deviation of the oscillator frequency from the assigned nominal value due to all combinations of specified operating and non-operating parameters within a specified period of time. In the general case, overall accuracy of an oscillator is the sum of the absolute values assigned to the following:

a. The initial frequency-temperature accuracy (see 6.4.24).

b. Frequency-tolerances due to supply voltage changes (see 6.4.17) and other environmental effects (see 6.4.12).

Total frequency change from an initial value due to frequency aging (see 6.4.11) at a specified temperature.

6.4.34 Phase angle modulation (deterministic process). Discrete bright lines induced by external influences (such as sinusoidal vibration) or by internal effects (such as harmonic generation) are quantified by the ratio of the power in the sideband being measured to the power at the frequency of the unmodulated signal, ν_o. In terms of voltages, the relative sideband intensity at offset frequency f, I(f), is given by:

$$I(f) = 10 \log(V^2(f) / V^2(\nu_o)) \ (units\ dBc)$$

6.4.35 Phase noise (random process). The short-term frequency stability of an oscillator in the frequency domain, characterized by $\mathcal{L}(f)$, where,

$$\mathcal{L}(f) = 10 \log[(1/2) S_\phi(f)] \ (units\ dBc\ in\ a\ 1\ Hz\ bandwidth)$$

where: $S_\phi(f)$ is the spectral density of phase fluctuations (see IEEE Standard 1139).

6.4.36 Retrace. When an oscillator operating in a stable condition at a specified test temperature, is turned off for a specified time period, maintained at the specified test temperature, and again turned on, retrace is the difference between the frequency at a specified time after oscillator turn-on and the frequency immediately prior to oscillator turn-off.

6.4.37 Rise time. The time observed for a logic "O" to logic "1" transition, when measured on the leading edge of a rectangular waveform pulse, between two specified voltage levels (see figure 8).

Downloaded from http://www.everyspec.com

6.4.38 Rubidium-crystal oscillator (RbXO). A crystal oscillator combined with a rubidium (Rb) frequency reference. The frequency of the crystal oscillator is controlled by a digital tuning memory which is continuously or intermittently syntonized by the high stability rubidium atomic reference.

6.4.39 Spurious response. Discrete frequency spectral components, nonharmonically related to the desired output frequency (except for subharmonics), appearing at the output terminal of an oscillator. These components may appear as symmetrical sidebands, or as single spectral components, depending upon the mode of generation. Spurious components in the output spectrum are usually expressed as a power ratio (in decibels) with respect to the signal power.

6.4.40 Syntonization. The process of adjusting the frequency of a crystal oscillator to that of a reference source, e.g., a rubidium reference standard.

6.4.41 Temperature compensated crystal oscillator (TCXO). A crystal oscillator whose frequency-temperature deviation is reduced from that of the crystal unit by an electronic (analog or digital) means of compensation within the device. TCXO-type devices are crystal oscillators in which compensation is achieved by a temperature-dependent variation of the crystal load reactance in a manner that compensates for the crystal unit's frequency-temperature characteristic.

6.4.42 Temperature compensated/voltage controlled crystal oscillator (TCVCXO). A combination of TCXO and VCXO.

6.4.43 Total frequency deviation. Defines the minimum peak frequency deviation from center frequency for a voltage controlled crystal oscillator under specified modulation or dc control voltage conditions. Total deviation is usually expressed in ± parts per million, ± percent, or ± Hz changes from center frequency for specified control voltage ranges or modulation voltage.

6.4.44 Trim effect. The degradation of crystal oscillator frequency-temperature stability and marked frequency offset as a result of frequency adjustment which produces a rotation or distortion, or both, of the initial frequency-temperature characteristic.

6.4.45 Voltage controlled crystal oscillators (VCXO). A crystal oscillator whose output frequency can be offset or modulated by application of an external control voltage. Similar to the XO, the frequency-temperature characteristic of a VCXO is determined mainly by the crystal unit employed.

6.5 Guidance documentation.

6.5.1 Guidance on selection of lead and terminal materials. The following lead and terminal materials should be considered for meeting the performance requirements of this specification (see 3.5.3.1):

a. Type A: Iron-nickel-cobalt alloy: MIL-I-23011, class 1, ASTM F-15.

b. Type B: Iron-nickel alloy (41 percent Ni): MIL-I-23011, class 5, ASTM F-30.

c. Type C: Co-fired metallization such as nominally pure tungsten. The composition and application processing of these materials should be subject to qualifying activity approval.

d. Type D: Copper core-iron nickel ASTM F-30 alloy (50.5 percent Ni). The core material should consist of copper (oxygen-free) ASTM B-170, grade 2.

e. Type E: Copper core ASTM F-15 alloy. The core material should consist of copper (oxygen-free) ASTM B-170, grade 2.

f. Type F: Copper (oxygen free) ASTM B-170, grade 2. This material should not be used as an element of any glass-to-metal seal structure.

g. Type G: Iron-nickel alloy (50.5 percent Ni): MIL-I-23011, class 2, ASTM F-30.

h. Type H: Nickel: MIL-N-46025 (for ribbon leads) and MIL-N-46026 (for round wire-leads).

Downloaded from http://www.everyspec.com

6.5.2 Guidance on lead finishes. The following lead finishes should be considered for meeting the performance requirements of this specification:

a. Hot solder dip. The hot solder dip should be homogeneous with a minimum thickness of 60 microinches (1.52 μm) for round leads and, for other shapes, a minimum thickness at the crest of the major flats of 200 microinches (5.08 μm) solder (SN60 or SN63). In all cases, the solder dip should extend up to and beyond the effective seating plane for packages with standoffs or within .030 inch (0.76 mm) of the lead or package interface for leaded flush mounted oscillators. For leadless chip carrier oscillators, the hot solder dip should cover a minimum of 95 percent of the metallized side castellation or notch and metallized areas above and below the notch except the index feature if not connected to the castellation. Terminal area intended for oscillator mounting should be completely covered. The hot solder dip is applicable:

   (1) Over a finish in accordance with entry 6.5.2b or 6.5.2c, or

   (2) Over electroplated nickel or electroless nickel phosphorous (see 6.5.4), or

   (3) Over the basis metal. When applied over the basis metal, underplate that is nonconforming, or other finishes that are nonconforming (e.g., fused tin less than 200 microinches (5.08 μm)), hot solder dip should cover the entire lead to the glass seal or point of emergence of the lead or metallized contact through the package wall.

b. Tin-lead plate. Tin-lead plating should have in the plated deposit 3 percent to 50 percent by weight lead (balance nominally tin) homogeneously co-deposited. Plated tin-lead should be a minimum of 300 microinches (7.62 μm) thick. Plated tin-lead should contain no more than 0.05 percent by weight co-deposited organic material measured as elemental carbon. Tin-lead plate is applicable:

   (1) Over electroplated nickel or electroless nickel phosphorous (see 6.5.4).

   (2) Over the basis metal.

c. Gold plate. Gold plating should be a minimum of 99.7 percent gold, and only cobalt should be used as the hardener. Gold plating should be a minimum of 50 microinches (1.27 μm) and a maximum of 225 microinches (5.72 μm) thick. Gold plating should be permitted only over nickel plate or undercoating.

6.5.3 Guidance on package finishes. The following package finishes should be considered for meeting the performance requirements of this specification:

a. Solder in accordance with 6.5.2a.

b. Tin-lead plate in accordance with 6.5.2b.

c. Gold plate should be a minimum of 99.7 percent gold and only cobalt should be used as a hardener. Gold plating should be a minimum of 10 microinches (0.25 μm) and a maximum of 225 microinches (5.72 μm) thick. The gold plate should be applied over electroless or electroplated nickel or undercoating (see 6.5.4). Multi-layered finish structures are acceptable provided the outer gold layer meets the minimum thickness of 10 microinches (0.25 μm) and each of the nickel undercoats meets the thickness requirements of 6.5.1 with the total nickel thickness not to exceed 600 microinches (15.24 μm).

d. Nickel plate should be in accordance with 6.5.4.

Downloaded from http://www.everyspec.com

6.5.4 Nickel plate or undercoating. Electroplated nickel undercoating or finishes from a sulfamate nickel bath is preferred and should be 50 microinches to 350 microinches (1.27 μm to 8.89 μm) thick measured on major flats or diameters. Electroless nickel undercoating or finishes, when allowed, should be 50 to 350 microinches (1.27 μm to 8.89 μm) thick measured on major flats or diameters. The addition of organic "wetting agents" is prohibited for either sulfamate or phosphorous nickel baths. Electroplate or electroless nickel plate (or combinations thereof) as well as nickel cladding may be used as the finish for package elements other than flexible leads or terminals provided the corrosion resistance and environmental requirements are met. In all cases, electroplated nickel undercoating from a nickel sulfamate bath is preferred for lead finishes. Electroless nickel should not be used as the undercoating on flexible or semiflexible leads (see MIL-STD-883, method 2004, test condition B_1, - bending stress, procedure for flexible and semi-flexible leads) and should be permitted only on rigid leads or package elements other than leads.

6.6 Subject term (key word) listing.

Allan deviation
Amplitude noise
Calibration
Clock accuracy
Duty cycle
Frequency adjustment
Frequency aging
Frequency offset
Frequency-environment tolerance
Frequency-temperature stability
Frequency-voltage tolerance
Harmonic and subharmonic distortion
Initial accuracy
Output waveform
Output power
Output logic voltage levels
Overall frequency accuracy
Phase noise
Startup time
Short-term stability
Trim effect

6.7 Changes from previous issue. Marginal notations are not used in this revision to identify changes with respect to the previous issue due to the extensiveness of the changes.

Downloaded from http://www.everyspec.com

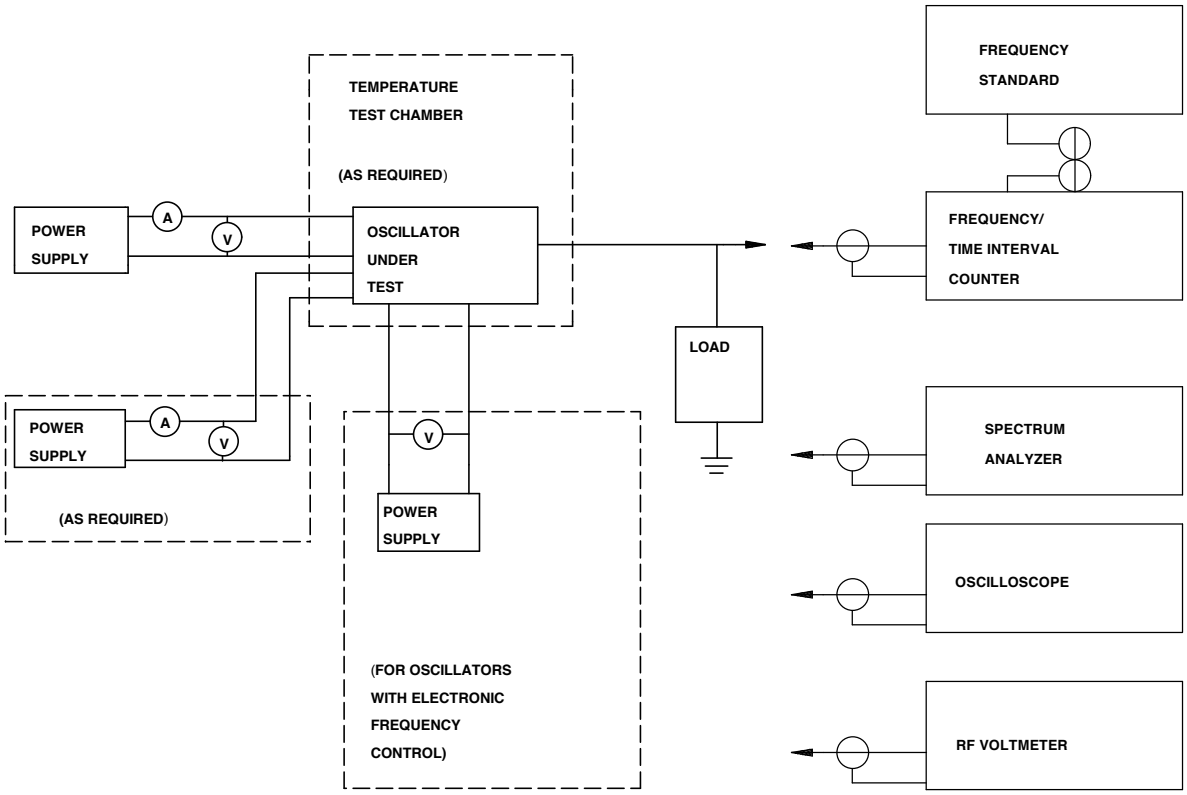

FIGURE 1. Basic bench test configuration.

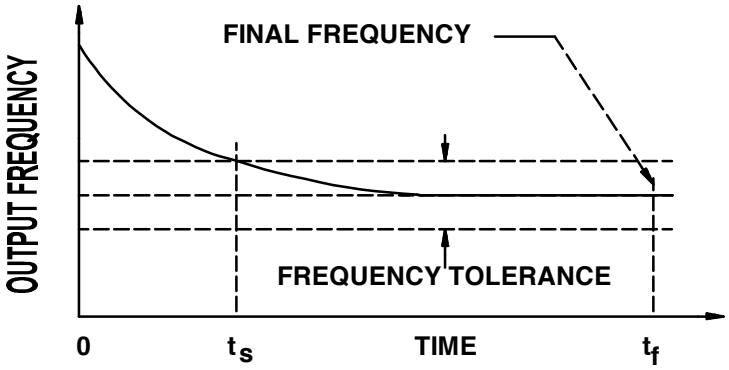

FIGURE 2. Typical oscillator warm-up characteristic.

Downloaded from http://www.everyspec.com

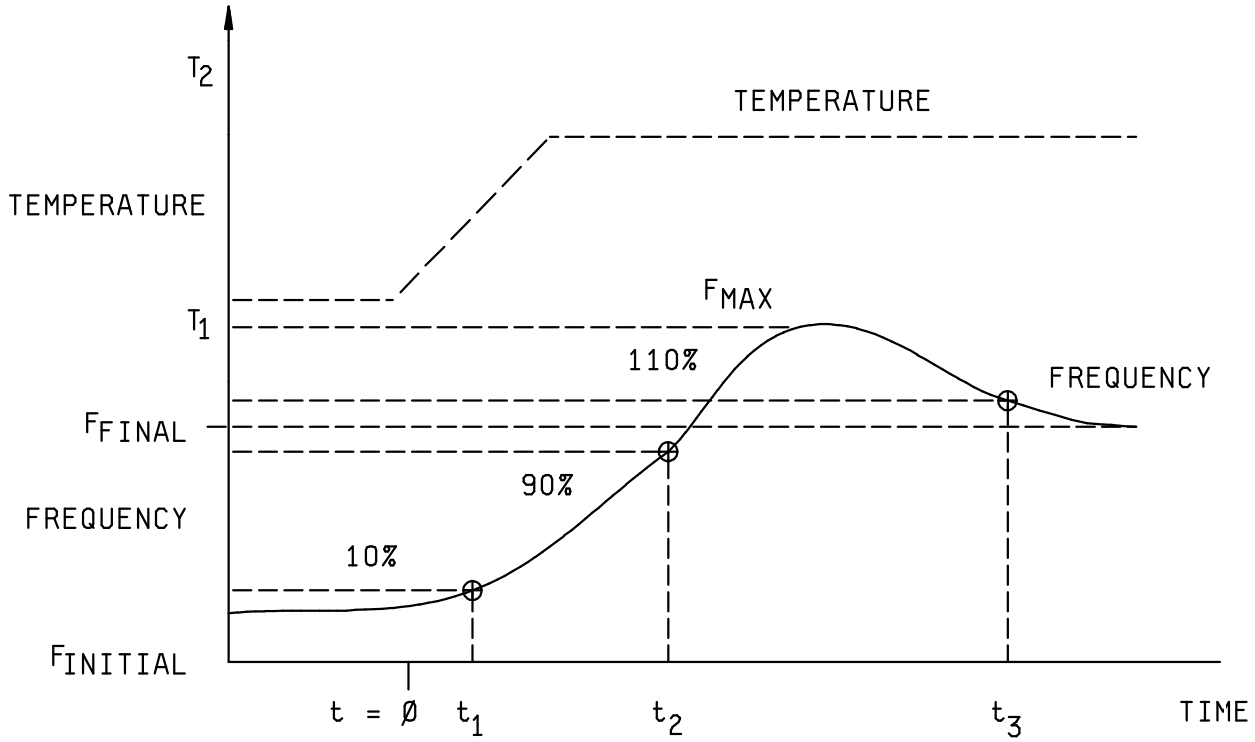

NOTE:

$t=Ø$ = End of stabilization time.

t_1 = Time for frequency to change 10 percent of the steady-state increment.

t_2 = Time for frequency to change 90 percent of the steady-state increment.

t_3 = Time for frequency to reach 110 percent of the steady-state increment on the recovery from overshoot (in the case where overshoot is greater than 10 percent).

FIGURE 3. Typical oscillator thermal transient characteristic.

Downloaded from http://www.everyspec.com

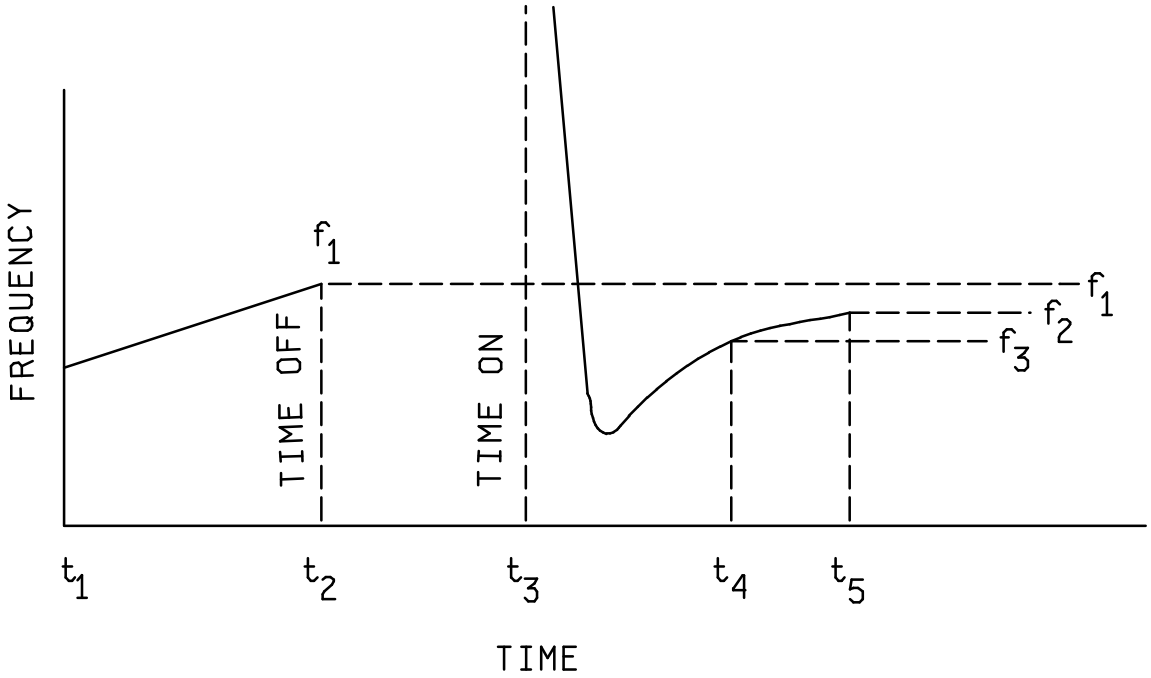

FIGURE 4. Typical oscillator retrace characteristic.

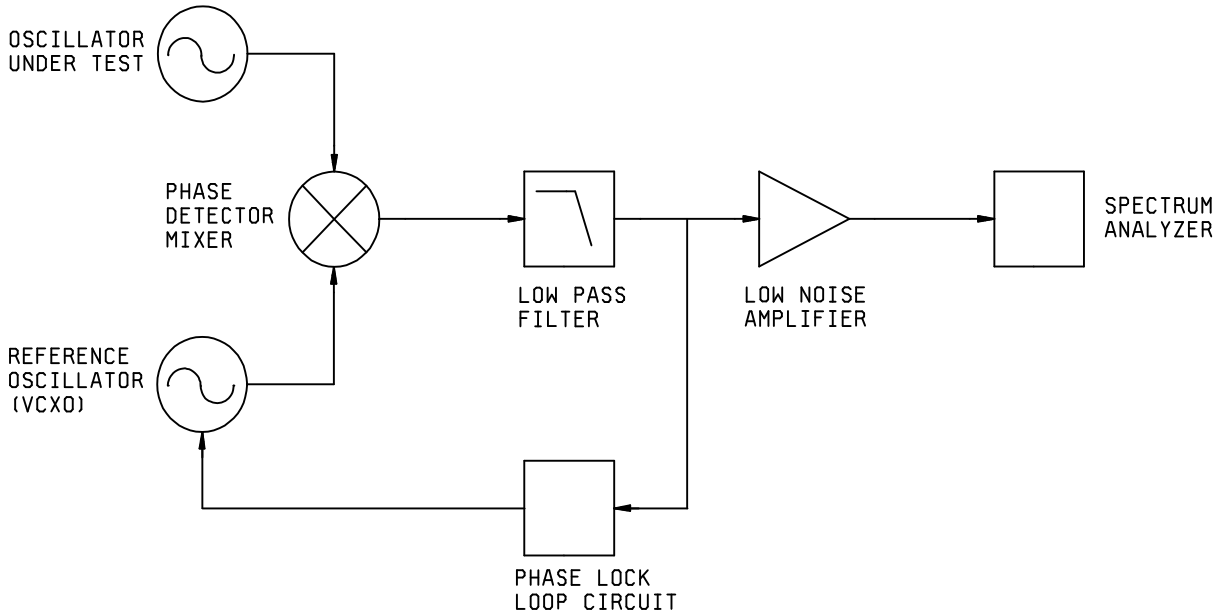

FIGURE 5. Quadrature phase detection method.

Downloaded from http://www.everyspec.com

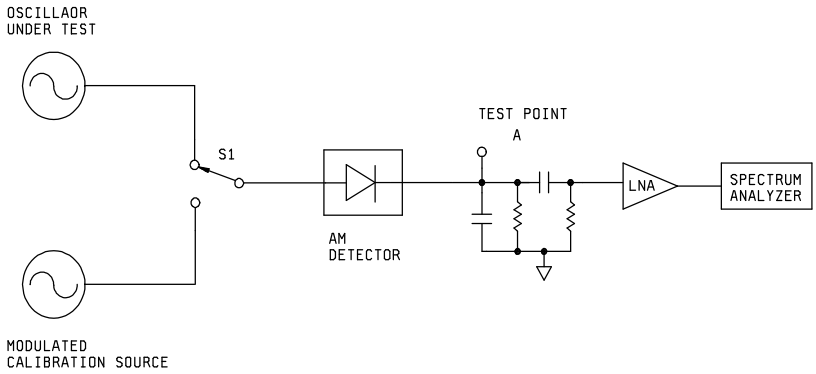

FIGURE 6. Test configuration for amplitude noise measurement.

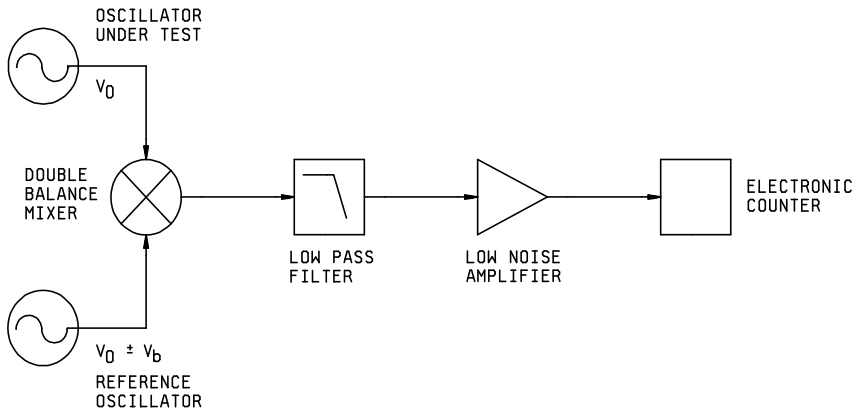

Heterodyne down-conversion method.

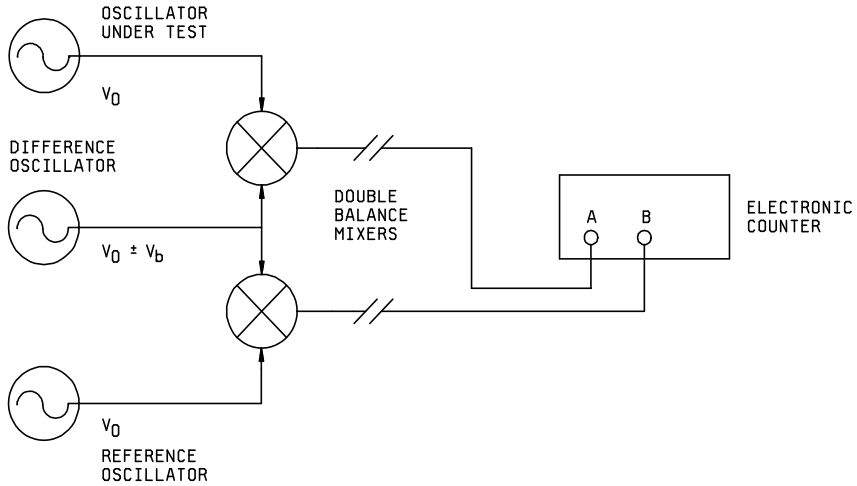

Dual mixer time difference method.

FIGURE 7. Short-term stability Allan deviation test procedure.

Downloaded from http://www.everyspec.com

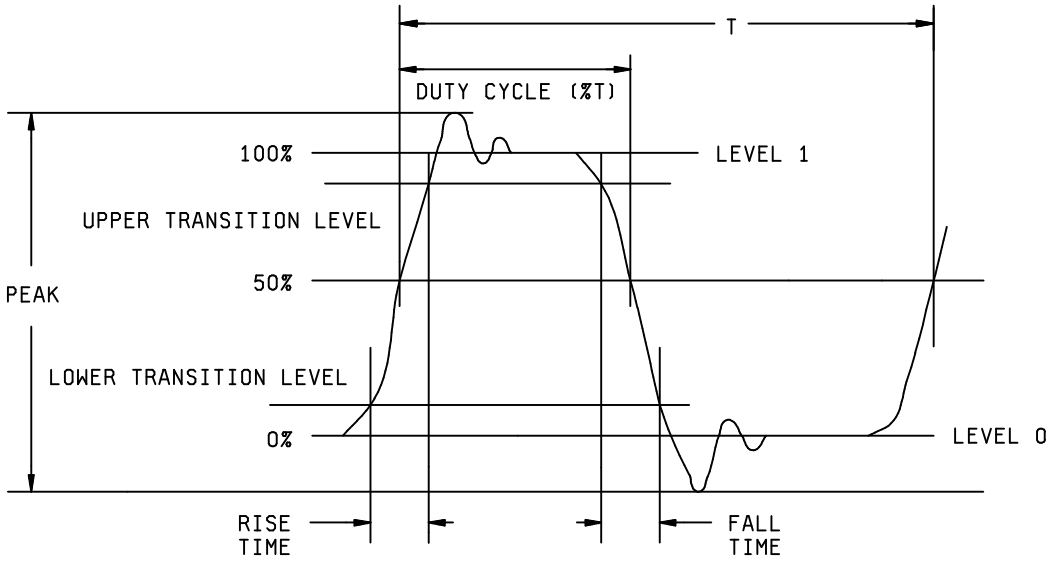

FIGURE 8. Rectangular output waveform.

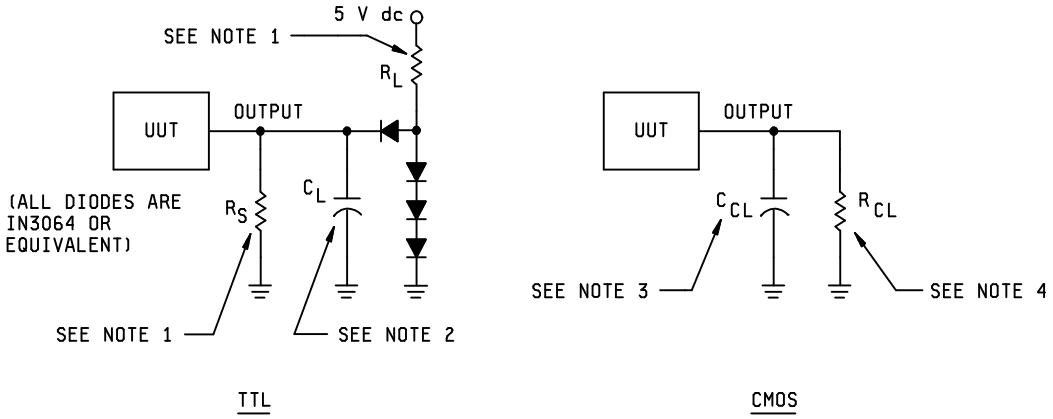

NOTES:

1. For 16 mA sink (10 TTL), R_L = 270Ω ±5 percent. (R_S = 6 kΩ).
   For 9.6 mA sink (6 TTL), R_L = 430Ω ±5 percent. (R_S = 10 kΩ).
2. C_L (including probe and fixture capacitance) = 2 pF per specified TTL load.
   Example: C_L (10 TTL) = 20 pF.
3. For CMOS: C_{CL} (including probe and fixture capacitance) = 20 pF ±5 percent.
4. For CMOS: R_{CL} = 100 kΩ ±5 percent.

FIGURE 9. TTL and CMOS test loads.

Downloaded from http://www.everyspec.com

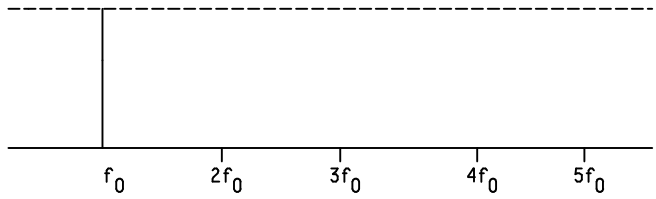

Spectrum without harmonics or subharmonics present.

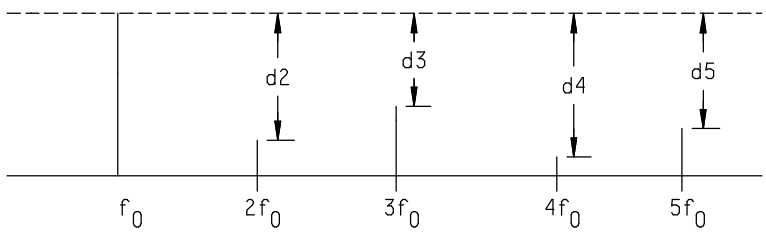

Spectrum with harmonics only present.

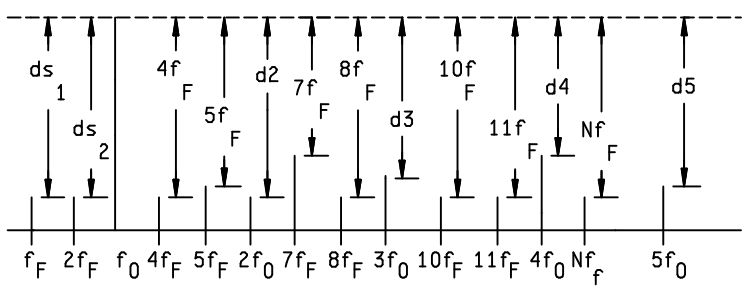

Spectrum without harmonics or subharmonics present.

LEGEND

f_F = basic frequency which is multiplied.
$2f_F...Nf_F$ = subharmonics.
F_o = output frequency.
$2f_o...Nf_o$ = harmonics level difference.
$ds_1...ds_n$ = level difference of fundamental and subharmonic.
d2...dn = level difference of fundamental and harmonic.

FIGURE 10. Harmonic and subharmonic distortion measurements.

Downloaded from http://www.everyspec.com

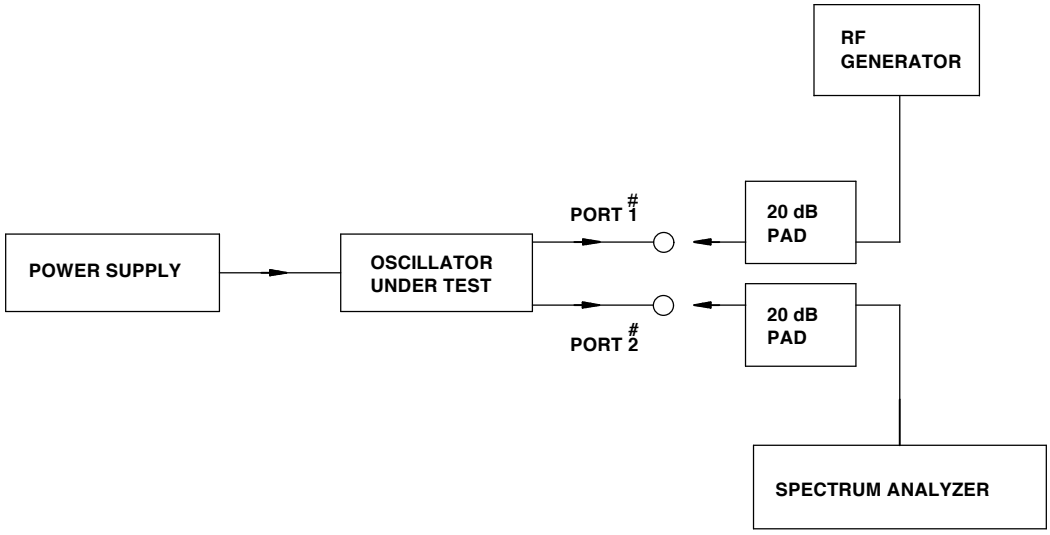

NOTE: The 20 dB pads must be of the proper terminating impedance for the oscillator ports. They can consist of a matching network and attenuator with a total insertion loss of 20 dB ±2 dB.

FIGURE 11. Test configuration for determining isolation between output ports.

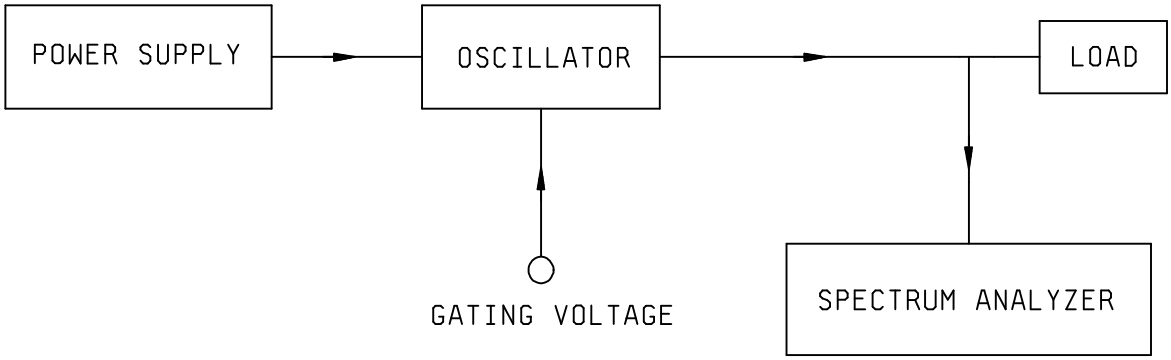

FIGURE 12. Test configuration for determining suppression of gated oscillators.

Downloaded from http://www.everyspec.com

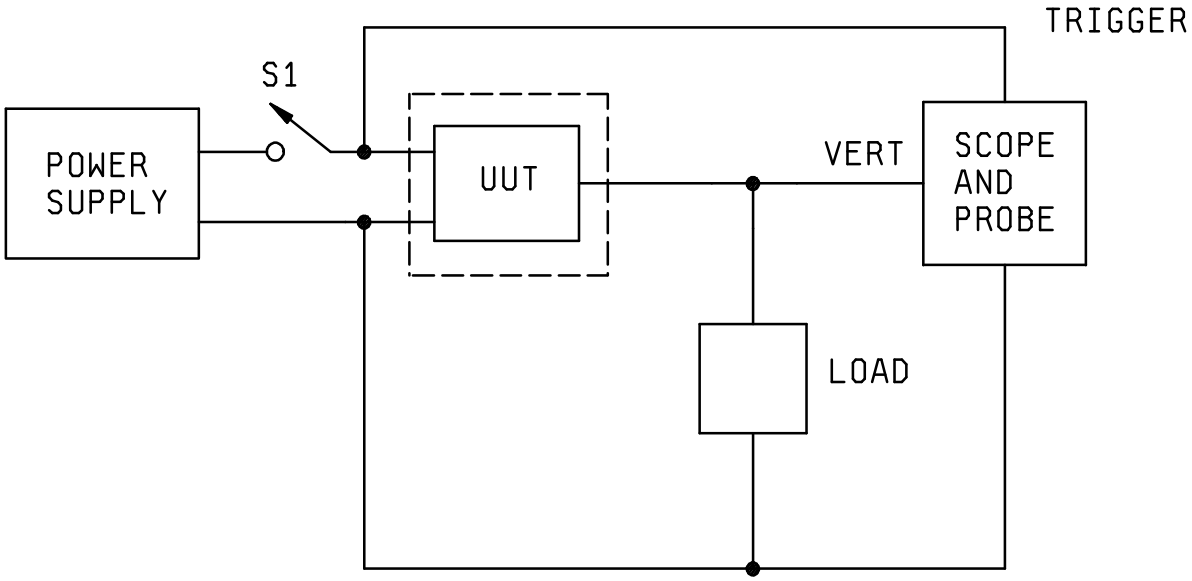

FIGURE 13. Test configuration for startup time measurement.

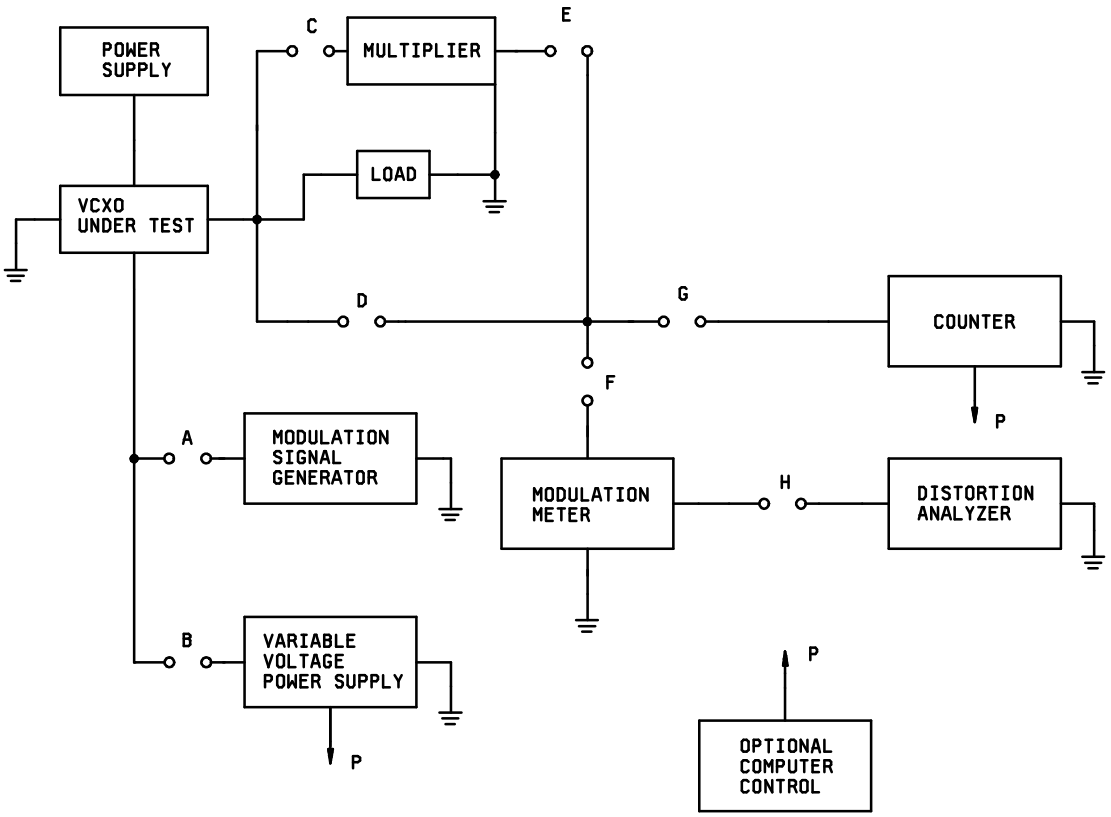

FIGURE 14. VCXO test configurations.

Downloaded from http://www.everyspec.com

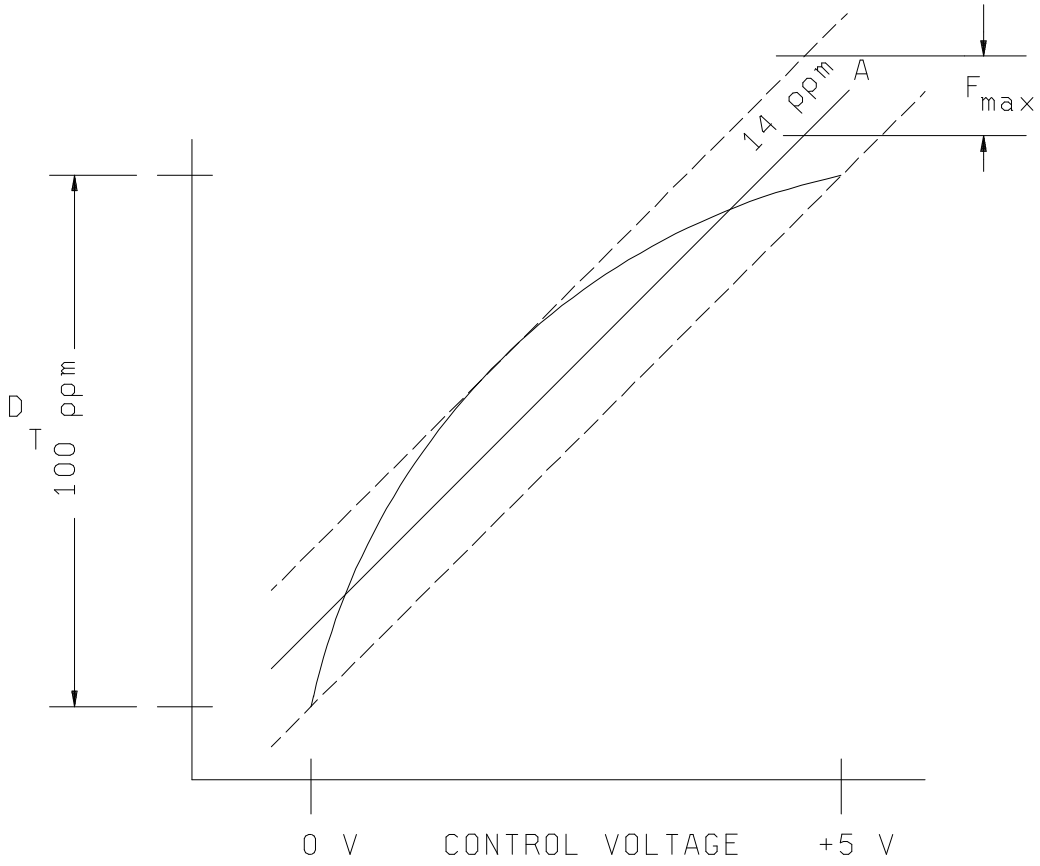

NOTE: The maximum deviation, F_{max}, from Best Straight Line "A" is ± 14 ppm and the total deviation, D_T, is 100 ppm, so the linearity is ±14 ppm/100 ppm = ±14%

FIGURE 15. Deviation linearity.

Downloaded from http://www.everyspec.com

CLASS 2 OSCILLATOR QPL SYSTEM REQUIREMENTS

A. SCOPE

A.1 Scope. This appendix establishes additional requirements for the QPL system for class 2 oscillators. The manufacturer shall maintain and demonstrate this system to the qualifying activity as prerequisite for qualification and retention of qualification. The system shall be part of the overall QPL system under MIL-STD-790. This Appendix is a mandatory part of the specification. The information contained herein is intended for compliance.

A.2 APPLICABLE DOCUMENTS
(This section is not applicable to this appendix.)

A.3 REQUIREMENTS

A.3.1 Design, processing, manufacturing equipment, and materials instructions. Oscillator design, processing, manufacturing equipment, and materials shall be documented in drawings, standards, specifications, or other appropriate media which shall cover the requirements and tolerances for all aspects of design and manufacturing including equipment test and prove-in, materials acquisition and handling, and design verification testing and processing steps. As a minimum requirement, detailed documentation must exist for the following items and must be adequate to assure that quantitative controls are exercised, tolerances or limits of control are sufficiently tight to assure a reproducible high quality product, and process and inspection records reflect the results actually achieved:

a. Incoming materials control.

b. Masking, photoresist, and mask registration.

c. Glassivation or passivation.

d. Metallization and film deposition.

e. Die, element, crystal, and substrate attachment.

f. Wirebonding.

g. Rework.

h. Sealing.

i. Crystal evaluation program.

A.3.2 Cleanliness and atmosphere control in work areas. The requirements for cleanliness and atmosphere control in each work area in which unsealed oscillators, or parts thereof, are processed or assembled shall be documented. The manufacturer shall establish action and absolute control limits (at which point work stops until corrective action is completed) based on historical information and criticalness of the process in each particular area. For foreign material identification and control, see internal visual inspection requirements of MIL-STD-883, method 2017.

Downloaded from http://www.everyspec.com

A.3.3 Environment control. The following are minimum environmental control requirements. All fabrication, assembly, and testing of microelectronic technology oscillators prior to preseal visual shall be in an environment meeting class 100,000 particle count requirements. Devices awaiting preseal visual inspection, devices accepted at preseal visual inspection and awaiting further processing, and noncontinuous production lots, accumulated after element attach and prior to preseal visual shall be stored in a dry nitrogen environment. (Noncontinuous production shall occur when oscillators are held by the manufacturer, with no additional assembly work performed, for more than 30 days.) The preseal visual inspection and the preparation for sealing environment shall be in accordance with MIL-STD-883, method 2017 and MIL-STD-883, method 2032. In addition, for product level S devices, all photolithographic operations shall be performed in a class 100 environment.

A.3.4 Rework provisions. All rework permitted on oscillators shall be as specified herein. This documentation shall reflect the processes, procedures, and materials to be used including verification or test information, and be approved by the qualifying activity of this specification. Each process or procedure shall be designated as rework. This documentation shall indicate that a decision to rework is made solely by the manufacturer. A typical example of rework is the removal of a defective element and replacement with a new element.

A.3.4.1 General rework provisions.

a. All temperature excursions during any rework shall not exceed the baselined rework limitations. Time and temperature limits shall be specified.

b. The minimum distance between the glass to metal seals and the package sealing surface shall be at least .040 inch (1.02 mm) (.050 inch (1.27 mm) for product level S) after final seal to prevent damage to lead seals by welding adjacent to them. (Applies to seam welding only.)

c. Any oscillator which is reworked after preseal visual inspection shall be subjected to full screening or rescreening as applicable. If an oscillator has not been subjected to a given required screen prior to rework, then that oscillator must be subjected to that screen after rework. For product level oscillators, full rescreening beginning with preseal visual inspection is required after any rework operation involving unlidded oscillators. For product level B oscillators, if an oscillator has been subjected to a given screen prior to rework, then rescreening applies as follows:

   (1) Preseal visual inspection. Inspect for general damage (low magnification in accordance with MIL-STD-883, method 2017 and method 2032) which might have been caused by the rework. Perform a complete MIL-STD-883, method 2017 or method 2032 inspection of the reworked element or area (e.g., replaced die, wirebonds, etc.).

   (2) Stabilization bake, temperature cycle or shock, mechanical shock or centrifuge, seal, and external visual. Rescreen all rework oscillators 100 percent.

   (3) Burn-in. Oscillators which have had elements replaced or have been wirebonded or rewirebonded require 100 percent burn-in rescreen.

d. For product level S oscillators, any oscillator which is reworked after 100 percent nondestructive bond pull (or preseal burn-in, when applicable) shall be subjected to full screening or rescreening as applicable. If an oscillator has not been subjected to a given required screen prior to rework, then that oscillator must be subjected to that screen after rework. Full screening is required after any rework operation involving unlidded oscillators with clarification as follows:

   (1) Preseal burn-in (when applicable) shall be repeated if the rework involves any active element replacement or wire bonding (or wire rebonding) of any active element.

   (2) Nondestructive bond pull is only required on wires that were replaced or rebonded provided the oscillator has already been subjected to the 100 percent bond pull screen.

Downloaded from http://www.everyspec.com

e. When flux is required for rework, the specific flux and detailed procedures for its use and subsequent special cleaning operations shall be documented and approved.

f. Replacement elements shall not be bonded onto the chip element they are to replace.

A.3.4.2 Element wire rebonding. Wire rebonding of elements other than substrates shall be permitted with the following limitations:

a. No scratched, voided, or discontinuous paths or conductor patterns on an element shall be repaired by bridging with or addition of bonding wire or ribbon.

b. All rebonds shall be placed on at least 50 percent undisturbed metal (excluding probe marks that do not expose underlying oxide). No more than one rebond attempt at any design bond location shall be permitted. No rebonds shall touch an area of exposed oxide caused by lifted or blistered metal. A bond shall be defined as a wire to post or wire to pad bond. Bond-offs required to clear the bonder after an unsuccessful bond attempt need not be visible, shall not be cause for reject and shall not be counted as a rebond. For product level S, the total number of rebond attempts (exclusive of total element replacement) shall be limited to a maximum of 10 percent of the total number of bonds in the class 2 microcircuit. The 10 percent limit on rebond attempts may be interpreted to the nearest whole number to the 10 percent value.

A.3.4.3 Substrate wire rebonding. Wire rebonding on substrates shall be permitted with the following limitations: No rebonds shall be made over intended bonding areas in which the top layer metallization has lifted, peeled, or has been damaged such that underlying metallization or substrate is exposed at the immediate bond site.

A.3.4.4 Compound bonding. Compound bonding for rework is permitted only as follows:

a. A gold ball bond on a substrate wire, a gold ball or a crescent bond.

b. Only monometallic compound bonds are permitted (i.e., the original bond wire and that used for compound bonding must be the same material and wire size).

c. The new bond must cover at least 75 percent of the original bond or wire.

d. The maximum number of compound bonds shall not exceed 10 percent of the total number of wires.

e. A corrective action system must be utilized in order to reduce the number of compound bonds.

f. All compound bonds shall be 100 percent nondestructive pull tested in accordance with MIL-STD-883, method 2023.

g. A compound bond shall not be used to connect two wires.

h. All compound bonds shall meet the visual criteria in MIL-STD-883, method 2017 and method 2032.

A.3.4.5 Element replacement. Element replacement shall be permitted with the following limitations:

a. Any polymer attached element may be replaced two times at a given location (not more than one time for product level S) on any oscillator.

b. Any metallic attached element may be replaced one time at a given location.

c. Any metallic attach element onto a plated tab where the tab is attached to a substrate with a higher temperature metallic attach process, may be replaced two times.

d. Substrates may be removed and put into a new package one time.

Downloaded from http://www.everyspec.com

A.3.4.6 Seal rework. The use of polymers to effect, improve, or repair any package seal shall not be permitted.

A.3.4.6.1 Lid seal rework. It shall be permissible to perform seal rework on oscillators that fail fine leak testing one time, only if tracer gas is included during the original sealing operation and under all of the following conditions:

a. Fine leak testing, without pressurization (bomb), must be performed immediately after sealing prior to any other test.

b. Oscillators shall be stored in a nitrogen environment for a maximum of 4 hours between initial seal and reseal without replacing the cover.

c. Oscillators shall be submitted to a predetermined vacuum bake prior to reseal.

d. Solder sealed packages may not be reworked in accordance with this procedure.

NOTE: The above leak testing shall not be used as a substitute for the fine leak testing required in 4.8.2.

A.3.5 Internal conductors. Internal thin film conductors on a substrate (metallization stripes, contact areas, bonding interfaces, etc.) shall be designed so that no properly fabricated conductor shall experience in normal operation (at worst case specified operating conditions), a current density in excess of the maximum allowable value calculated by the manufacturer.

Conductor material	Maximum allowable current density
Aluminum (99.99 percent pure or doped) without glassivation	2×10^5 A/cm^2
Aluminum (99.99 percent pure or doped) glassivated	5×10^5 A/cm^2
Gold	6×10^5 A/cm^2
All other (unless otherwise specified)	2×10^5 A/cm^2

The current density shall be calculated at the point of maximum current density (i.e., greatest current per unit cross section) for the specified oscillator and schematic or configuration.

a. Use a current value equal to the maximum continuous current (at full fanout for digitals or at maximum load for linears) or equal to the simple time-averaged current obtained at maximum rated frequency and duty cycle with maximum load, whichever results in the greater current value at the point of maximum current density. This current value shall be determined at the maximum recommended supply voltage and with the current assumed to be uniform over the entire conductor cross-sectional area.

b. Use the minimum allowed metal thickness in accordance with manufacturing specifications and controls including appropriate allowance for thinning experienced in the metallization step (via). The thinning factor over a metallization step is not required unless the point of maximum current density is located at the step.

c. Use the minimum actual design conductor widths (not mask widths) including appropriate allowance for narrowing or undercutting experienced in metal etching.

d. Areas of barrier metals and nonconducting material shall not be included in the calculation of conductor cross section.

Downloaded from http://www.everyspec.com

COMPONENT EVALUATION SYSTEM

B. SCOPE

B.1 Scope. This appendix establishes requirements for a component evaluation system for oscillators manufactured in accordance with this specification. The manufacturer shall maintain and demonstrate this system to the qualifying activity as prerequisite for qualification and retention of qualification. The system shall be part of the overall QPL system under MIL-STD-790. This Appendix is a mandatory part of the specification. The information contained herein is intended for compliance.

B.2 APPLICABLE DOCUMENTS

SPECIFICATIONS

DEPARTMENT OF DEFENSE

MIL-PRF-3098 - Crystal Units, Quartz, General Specification for.

MIL-PRF-19500 - Semiconductor Devices, General Specification for.

MIL-PRF- 31032 - Printed Circuit Board/Printed Wiring Board, General Specification for.

MIL-PRF- 38535 - Integrated Circuits (Microcircuits) Manufacturing, General Specification for.

MIL-PRF- 55110 - Printed Wiring Board, Rigid, General Specification for.

STANDARDS

DEPARTMENT OF DEFENSE

MIL-STD-750 - Test Methods for Semiconductor Devices.

MIL-STD-790 - Standard Practice for Established Reliability and High Reliability Qualified Product List (QPL) Systems for Electrical, Electronic, and Fiber Optic Parts Specifications.

INSTITUTE FOR INTERCONNECTING AND PACKAGING ELECTRONIC CIRCUITS

IPC-D-275 - Design Standard for Rigid Printed Boards and Rigid Printed Board Assemblies.

B.3 REQUIREMENTS

B.3.1 General requirements.

B.3.1.1 Oscillator class. The manufacturer shall establish a component evaluation system based on the class of the oscillator. There are three classes of oscillators defined in this specification: Class 1, which uses discrete device technology; Class 2, which uses microelectronic technology; and Class 3, which uses mixed technology (i.e., both discrete and microelectronic). These classes require the manufacturer to meet the requirements as specified herein.

B.3.1.2 Alternative system requirements. The manufacturer has the option to use alternative methods for achieving the general requirements of the component evaluation system specified herein. There are two methods for approving alternative system requirements:

a. Approval by the qualifying activity of proposals by the manufacturer.

b. When the qualifying activity has approved the establishment of a Technology Review Board (TRB) in accordance with MIL-STD-790, the TRB can approve alternative systems.

Downloaded from http://www.everyspec.com

B.3.2 Class 1. For discrete technology, components are discrete, packaged type devices. The manufacturer's component evaluation system shall, as a minimum, address requirements as follows:

B.3.2.1 Quartz crystals. The following requirements, as a minimum, shall be addressed:

a. Pertinent characteristics (electrical, physical, mechanical, quality, and reliability) for the quartz crystal shall be addressed.

b. Method of electrical connection to the resonator electrodes: Preferred methods of electrical connection include conductive adhesive, solder, thermocompression bond, ultrasonic bond, parallel-gap weld, electroplated metal bond, or other methods proving intimate metal-to-metal continuity. Interference, friction, crimping, or similar joining of parts unreinforced by solder, welding, or other methods shall not be used.

c. Crystal units. Crystal units using solder seal shall not be used. MIL-PRF-3098 should be used as a guide for establishing requirements.

d. Uncased quartz resonators. In addition to meeting the electrical connection requirement stated in B.3.2.1(a), oscillators using uncased quartz resonators shall be hermetically sealed in vacuum or dry backfill gas. Type of gas, purity, moisture, temperature, and pressure at sealing shall be traceable to the production lot(s).

e. Frequency adjustment of quartz resonators by abrasion of the electrode or exposure to a halogen light shall be prohibited.

B.3.2.2 Packaged passive components. The following requirements, as a minimum, shall be addressed:

a. Pertinent characteristics (electrical, physical, mechanical, quality, reliability) of the passive component shall be addressed.

b. Established reliability (ER) QPL components and other QPL components are preferred. When non-QPL parts are selected, the oscillator manufacturer shall address requirements for assessing quality and reliability of the component and component supplier. When assessing the quality and reliability of non-QPL devices, the applicable specification should be used as a guide.

B.3.2.3 Packaged semiconductors. The following requirements, as a minimum, shall be addressed:

a. Pertinent characteristics (electrical, physical, mechanical, quality, and reliability) of the semiconductor shall be addressed.

b. JAN, JANTX, and JANTXV semiconductors in accordance with MIL-PRF-19500 are preferred. When non-QPL semiconductors are selected, the oscillator manufacturer shall address requirements for assessing the quality and reliability of the component and the component supplier. When assessing the quality and reliability of non-QPL devices, MIL-PRF-19500 should be used as a guide.

B.3.2.4 Packaged integrated circuits. The following requirements, as a minimum, shall be addressed:

a. Pertinent characteristics (electrical, physical, mechanical, quality, and reliability) of the integrated circuit shall be addressed.

b. Standard Microcircuit Drawing (SMD) and QML devices (in accordance with MIL-PRF-38535) are preferred. When non-SMD or non-QML devices are selected, a device compliant with applicable requirements of MIL-STD-883 is preferred. When nonstandard integrated circuits are selected, the oscillator manufacturer shall address requirements for assessing the quality and reliability of the devices and device supplier. When assessing the quality and reliability of nonstandard integrated circuits, the aforementioned documents should be used as a guide.

Downloaded from http://www.everyspec.com

B.3.2.5 Printed wiring boards. When printed wiring boards are used in the manufacturing process, the following requirements, as a minimum, shall be addressed:

a. Pertinent characteristics (electrical, physical, mechanical, quality , reliability) of the printed circuit board.

b. Standards and specifications used to assess printed wiring boards and suppliers. IPC-275, MIL-PRF-55110, and MIL-PRF-31032 are preferred.

B.3.3 Class 2. For microelectronic technology, components are typically chip type passive components, uncased quartz crystal resonators, and semiconductor/microcircuit die and are commonly referred as elements. The manufacturer's component/element evaluation system shall, as a minimum, address the following requirements:

a. Microcircuit and semiconductor die and assembly techniques.

b. Passive elements and assembly techniques.

c. Adhesives.

d. Ceramic substrate/printed wiring.

e. Crystal elements and assembly techniques.

f. Process control.

B.3.3.1 General requirements.

B.3.3.1.1 Sequence of tests. The preferred tests identified in table B-1 identify various subgroups of tests and within those subgroups a sequence of tests. The subgroups may be performed in any sequence, individual testing within a subgroup shall be performed in sequence listed in the table. The manufacturer may use alternative systems provided they are approved as specified in B.3.1.2.

B.3.3.1.2 ESD protection. Suitable handling precautions and grounding procedures shall be taken to protect elements and oscillators from ESD damage (see 3.3.2).

B.3.3.1.3 Location of element evaluation. Evaluation may be performed at either the element supplier or oscillator manufacturing facility.

B.3.3.1.4 Preferred microcircuit/semiconductor die and passive elements .

B.3.3.1.4.1 Microcircuit die. Use of qualified die in accordance with MIL-PRF-38535 is preferred. If a non-qualified die is used the oscillator manufacturer shall address requirements for assessing the quality and reliability of the die and die supplier. Additional requirements for microcircuit die are specified herein (see B.3.3.2).

B.3.3.1.4.2. Semiconductor die. Use of JANHC and JANKC die in accordance with MIL-PRF-19500 are preferred. If a non-JANHC or non-JANKC die is selected, the oscillator manufacturer shall address requirements for assessing the quality and reliability of the die and die supplier. Additional requirements for semiconductor die are specified herein (see B.3.3.2).

B.3.3.1.4.3 Passive elements. Use of established reliability (ER) QPL components and other QPL chip type components are preferred. If a non-QPL element is selected, the oscillator manufacturer shall address the requirements for assessing the quality and reliability of the element and element supplier. Additional requirements for passive elements are specified herein (see B3.3.3).

Downloaded from http://www.everyspec.com

B.3.3.2 Evaluation of microcicuit and semiconductor die. Microcircuit and semiconductor die shall be evaluated as specified in B.3.3.2.1 through B.3.3.2.3. The manufacturer may use alternative evaluation systems provided they are approved as specified in B.3.1.2.

B.3.3.2.1 Electrical test specifications. Electrical test parameters, values, limits (including deltas, when applicable), and conditions shall be specified in the electrical test specifications.

B.3.3.2.2 Die evaluation. Evaluation of the die shall include electrical and visual evaluation of the die as well as an evaluation of assembled die. The electrical and visual evaluation of the semiconductor die is not required if the die is a JANHC or JANKC die tested in accordance with appendix H of MIL-PRF-19500. Electrical and visual evaluation of the microcircuit die is not required for MIL-PRF-38535 qualified die.

B.3.3.2.2.1 Electrical testing. Each die shall be electrically tested (100 percent of the lot), which may be done at the wafer level, provided that all failures are identified and removed from the lot when the dice are separated from the wafer. The manufacturer is responsible for establishing the appropriate electrical requirements for compliance in the die specification.

B.3.3.2.2.2 Visual inspection. Each die shall be visually inspected to assure conformance with applicable die related requirements of MIL-STD-883, method 2010; MIL-STD-750, method 2072 and method 2073, and the die specification.

B.3.3.2.3 Assembled die evaluation. From each wafer lot, a sample shall be evaluated in accordance with table B-I and B.3.3.2.3.1 through B.3.3.2.3.4 for the subgroups shown. Each sample shall be assembled into a suitable package that simulates the assembly methods that will be used in production.

B.3.3.2.3.1 Subgroup 1 and subgroup 2.

B.3.3.2.3.1.1 Sample size. The product level B sample requires at least 10 dice from each wafer lot. The product level S sample requires 3 dice from each wafer and a total of at least 10 dice from each wafer lot.

B.3.3.2.3.2.2 Subgroup 1(internal visual). Each sample shall be visually inspected after assembly for conformance with the applicable die requirements of MIL-STD-883, method 2010, MIL-STD-750, method 2072, and MIL-STD-750, method 2073and the die specification.

B.3.3.2.3.3.3 Subgroup 2 (electrical testing). For interim, post burn-in, and final electrical testing, the minimum requirements shall include static tests at +25 °C, at maximum rated operating temperature, and at minimum rated operating temperature.

B.3.3.2.3.2 Subgroup 3 (wire bond evaluation).

B.3.3.2.3.2.1 Sample size. From each wafer lot, a sample of at least 5 dice requiring 10 bond wires minimum.

B.3.3.2.3.2.2 Wire bond strength testing. For wire bond strength testing:

a. A minimum of 10 wires, consisting of chip to package bonds shall be destructively pull tested. An equal number of bonds shall be tested on each sample die.

b. For beam lead and flip-chips, five dice shall be tested.

c. The die metallization shall be acceptable if no failure occurs. If only one wire bond fails, another sample shall be selected in accordance with B.3.3.2.3.2.1 and subjected to subgroup 3 evaluation. If the second sample contains no failures, the bonding test results are acceptable. If the second sample contains one or more failures, or if more than one failure occurs in the first sample, the lot of dice shall be rejected.

d. The rejected wafer lot may be resubmitted to subgroup 3 evaluation if the failure was not due to defective die metallization.

Downloaded from http://www.everyspec.com

B.3.3.2.3.2.3 Subgroup 4 (scanning electron microscope (SEM), product level S only). Sample selection and reject criteria shall be in accordance with MIL-STD-883, method 2018. Alternatively, SEM testing may be performed on a sample of eight randomly selected dice from each wafer. For very large dice that comprise a large area of the wafer, the qualifying activity or TRB may approve alternate sampling procedures.

B.3.3.2.3.2.4 Subgroup 5 (radiation testing, product level S only, when specified). Sample shall be 3 dice from each wafer and a minimum of 10 dice from each wafer lot. The sample shall be equally divided between MIL-STD-883, method 1017 and method 1019. For dose rate and latchup, photo current and latch-up effects are functions of circuit configurations and should be simulated during tests.

TABLE B-I. Assembled dice evaluation requirements.

Subgroup	Product level		Test	MIL-STD-883		Quantity (accept no.)	Reference paragraph
	S	B		Method	Condition		
1	X	X	Internal visual	2010 2072 2073 1/		10 (0)	B.3.3.2.3.2
2	X		Stabilization bake	1008	C	10 (1)	B.3.3.2.3.3
	X		Temperature cycling	1010			
	X		Mechanical shock or Constant acceleration	2002 2001	C, Y1 direction B, Y1 direction		
	X		Interim electrical				
	X		Burn-in	1015	240 hours min. at +125°C		
			Postburn-in electrical				
			Steady-state life	1005			
			Final electrical				
3	X	X	Wire bond evaluation	2011		10(0) wires or 20(1) wires	B.3.3.2.3.2.2
4	X		Scanning electron microscope (SEM)	2018		See method 2018	B.3.3.2.3.2.3
5	X		Radiation			10 (0)	B.3.3.2.3.2.4
			Dose rate and latchup	1020			
			Total dose	1019		5 (0)	
			Neutron irradiation	1017		5 (0)	

1/ MIL-STD-750 methods.

Downloaded from http://www.everyspec.com

B.3.3.3 Evaluation of passive elements.

B.3.3.3.1 Electrical test specifications. Electrical test parameters, values, limits, and conditions shall be as specified in the passive element specification.

B.3.3.3.2 Evaluation of passive element lots. Evaluation of passive elements shall include electrical and visual evaluation of the elements as well as an evaluation of assembled elements. The electrical and visual evaluation of the element is not required if the element is an ER QPL or other QPL type device. The manufacturer may use alternative evaluation systems provided they are approved as specified in B.3.1.2.

B.3.3.3.2.1 Electrical testing. Each passive element shall be 100 percent electrically tested at +25°C, or as specified in the passive element specification.

B.3.3.3.2.2 Visual inspection. In accordance with the applicable element requirements of MIL-STD-883, method 2032, and the element specification. For product level S, each element shall be visually inspected. For product level B, a sample of 22 (accept on 0 defects) shall be visually inspected.

B.3.3.3.2.3 Assembled passive elements. From each inspection lot of passive elements, a randomly selected sample shall be evaluated in accordance with table B-II and B.3.3.3.2.3.1 through B.3.3.3.2.3.3.

a. Each sample element shall be assembled into suitable packages that simulates the assembly methods used in production.

b. The sample shall contain at least 20 wire bonds (an equal number on each element) if wire bonding assembly is applicable.

B.3.3.3.2.3.1 Subgroup 1 tests. The samples of the assembled passive elements shall be subjected to subgroup I tests as specified in table B-II.

B.3.3.3.2.3.1.1 Electrical tests. Electrical testing of assembled passive elements shall, as a minimum, include the following characteristics at +25°C:

a. Resistors: DC resistance.

b. Ceramic capacitors: Dielectric withstanding voltage, insulation resistance, capacitance, and dissipation factor.

c. Tantalum capacitors: DC leakage, capacitance, and dissipation factor.

d. Metal insulation semiconductor (MIS) capacitors: DC leakage, capacitance, dielectric withstanding voltage.

e. Inductors: DC resistance, inductance, and Q.

B.3.3.3.2.3.1.2 Visual inspection. Elements shall be visually examined for evidence of corrosion or damage due to the test and conditioning sequence.

Downloaded from http://www.everyspec.com

B.3.3.3.2.3.2 Subgroup 2 (wire bond). The wire bond test only applies to passive elements when wire bond assembly of passive elements is used to manufacture the oscillator. The sample shall include at least 5 elements and 10 bond wires minimum.

a. At least 10 wires, consisting of element to substrate and package bonds shall be destructively pull tested. An equal number of bonds shall be tested on each sample element.

b. The element metallization shall be acceptable if no failure occurs. If only one wire bond fails, a second sample shall be selected from the remaining elements in the evaluation sample, and subjected to the test as specified in B.3.3.3.2.3.2(a). If the second sample contains no failures the bonding test results are acceptable. If the second sample contains one or more failures, or if more than one failure occurs in the first sample, the element lot shall be rejected.

c. The element inspection lot may be resubmitted to evaluation if the failure was not due to defective element metallization.

TABLE B-II. Assembled passive element evaluation requirements.

Subgroup	Product level		Test	MIL-STD-883		Quantity (accept no.)	Reference paragraph
	S	B		Method	Condition		
1	X		Stabilization bake	1008	C	10 (1)	B.3.3.3.2.3.1
	X		Temperature cycling	1010	C		
	X		Mechanical shock	2002	C, Y1 direction		
			or				
	X		Constant acceleration	2001	B, Y1 direction		
	X		Voltage conditioning				
			or				
	X		Aging (capacitors)	2017			
	X	X	Visual inspection				
	X		Electrical				
2	X	X	Wire bond evaluation (when applicable)	2011		10(0) wires or 20(1) wires	B.3.3.3.2.3.2

B.3.3.4 Adhesive evaluation. The polymeric adhesives used in microelectronic technology applications shall be capable of meeting the performance requirements of MIL-STD-883, method 5011.

B.3.3.5 Ceramic substrate printed wiring (substrates).

B.3.3.5.1 Definition. For the purpose of substrate evaluation, a substrate inspection lot shall consist of homogeneous substrates having the same number of layers, manufactured using the same facilities, processes, and materials, and be vacuum deposited, plated or printed as one lot.

Downloaded from http://www.everyspec.com

B.3.3.5.2 Electrical test specifications. Electrical test parameters, values, limits, and conditions shall be as specified in the applicable substrate specification.

B.3.3.5.3 Evaluation of substrate element lots.

B.3.3.5.3.1 Electrical testing. Each substrate shall be electrically tested at +25°C, as specified in the applicable substrate specification.

B.3.3.5.3.2 Visual inspection. Each substrate shall be visually inspected to assure conformance with the applicable requirements of MIL-STD-883, method 2032, and the applicable substrate specification.

B.3.3.5.4 Evaluation of assembled substrate elements. From each inspection lot of substrates, a randomly selected sample shall be evaluated in accordance with table B-III and B3.3.5.4.1 through B.3.3.5.4.3. With preparing activity approval, destructive tests may be performed on test coupons which provide the required test information. The test coupons must be made with the same materials that were used in the manufacturing of the inspection lot and processed at the same time as the inspection lot.

B.3.3.5.4.1 Subgroup 1. A minimum of five samples shall be submitted to subgroup 1 testing.

B.3.3.5.4.1.1 Physical dimension. Inspect in accordance with MIL-STD-883, method 2016, and the applicable substrate specification.

B.3.3.5.4.1.2 Visual inspection. Inspect in accordance with MIL-STD-883, method 2032, and the applicable substrate specification.

TABLE B-IIII. Assembled substrate evaluation requirements.

Subgroup	Test	MIL-STD-883		Quantity (accept no.)	Reference paragraph
		Method	Condition		
1	Physical dimension	2016		5 (0)	B.3.3.5.4.1.1
	Visual inspection	2032			B.3.3.5.4.1.2
	Electrical				B.3.3.5.4.1.3
	Conductor thickness or conductor resistivity				B.3.3.5.4.2.1 B.3.3.5.4.2.2
	Film adhesion			3 (0)	B.3.3.5.4.2.3
	Solderability				B.3.3.5.4.2.4
3	Temperature coefficient of resistance			2 (0)	B.3.3.5.4.3.1
	Wire bond evaluation	2011		10 wires (0) 30 wires (1)	B.3.3.5.4.3.2
	Die shear evaluation	2019		2 (0)	B.3.3.5.4.3.3

Downloaded from http://www.everyspec.com

B.3.3.5.4.1.3 Electrical. Substrates shall be electrically tested at 25°C for the following characteristics (minimum). Requirements shall be as specified in the applicable substrate detail specification.

a. Resistors: DC resistance.

b. Capacitors: Capacitance. If specified in the applicable substrate detail specification, test for dielectric withstanding voltage, insulation resistance, and dissipation factor.

c. For multi-layered substrates, continuity and isolation testing shall be performed to verify the interconnection of conductors as specified in the applicable substrate detail specification.

B.3.3.5.4.2 Subgroup 2. A minimum of three samples that have been subjected to, and passed, subgroup 1 testing shall be submitted to subgroup 2 testing.

B.3.3.5.4.2.1 Conductor thickness. Measure conductor thickness in accordance with the applicable substrate detail specification. Conductor thickness shall meet the requirements specified in the applicable substrate detail specification.

B.3.3.5.4.2.2 Conductor resistivity. Measure conductor resistivity in accordance with the applicable substrate detail specification. Conductor resistivity shall meet the requirements specified in the applicable substrate detail specification.

B.3.3.5.4.2.3 Film adhesion. Film adhesion testing shall be performed to demonstrate that the components meet the performance requirements of this specification. The substrate and tape shall show no evidence of peeling or flaking of metallization.

B.3.3.5.4.2.4 Solderability. For solderable substrates only, perform solderability testing if specified in the applicable substrate detail specification in accordance with the applicable substrate detail specification.

B.3.3.5.4.3 Subgroup 3. A minimum of two samples that have been subjected to, and passed, subgroup 1 testing shall be submitted to subgroup 3 testing.

B.3.3.5.4.3.1 Temperature coefficient of resistance (TCR). When specified in the applicable detail specification, perform TCR testing for resistors in accordance with MIL-STD-202, method 304. TCR shall meet the requirements specified in the applicable specification.

a. Thick film type: Test as a minimum, two resistors from each resistor paste sheet resistance value. One from the smallest and one from the largest area resistors at -55 °C, and +125°C using a reference reading at +25°C, or temperatures as specified in the substrate specification.

b. Thin film type: Test as a minimum, the highest value resistor at +125 °C using a reference reading at +25°C or temperatures as specified in the substrate specification.

c. If specified in the applicable specification, TCR tracking testing shall be performed. TCR tracking shall meet the requirements specified in the applicable substrate specification.

Downloaded from http://www.everyspec.com

B.3.3.5.4.3.2 Wire bond strength testing. For wire bondable substrates, perform wire bond strength testing in accordance with MIL-STD-883, method 2011. The sample shall include at least 2 substrates and 10 bond wires minimum.

For gold metallized product level S substrates that at the microelectronic level are intended to contain aluminum wire bonds, aluminum wires shall be placed as specified in the detail specification. These wire bond samples shall be baked for 1 hour at +300°C in either an air or inert atmosphere prior to the performance of wire bond strength testing.

a. At least 10 wires, consisting of substrate to substrate bonds, shall be destructively pull tested. An equal number of bonds shall be tested on each sample substrate.

b. The substrate metallization shall be acceptable if no failure occurs. If only 1 wire bond fails, a second sample of a minimum of 20 wires shall be prepared using the same wire type/size and the same type equipment as the failed bond. If the second sample contains one or more failures, or if more than one failure occurs in the first sample, then the substrate inspection lot shall be rejected.

c. The substrate inspection lot may be resubmitted to evaluation if the failure(s) was not due to defective substrate metallization.

B.3.3.5.4.3.3 Die shear strength testing. Perform shear strength testing in accordance with MIL-STD-883, method 2019. At least two dice per substrate shall be attached and tested for each die attachment method, as specified in the applicable substrate detail specification. If a failure occurs at less than the specified force and is not due to defective substrate materials, the lot shall be resubmitted to die shear evaluation and the failure mode documented.

B.3.3.6 Evaluation of crystals. The manufacturer shall document a crystal evaluation program plan as part of the component evaluation program. The plan shall define the acceptance criteria used to evaluate crystals at the following stages as a minimum:

a. The crystal as a blank prior to metallization, or as part of receiving inspection.

b. At a post metallization and pre-mount stage.

B.3.3.7 Control of critical process and procedure (process control). The indicated process shall be controlled in accordance with table B-IV and B.3.3.7.1.

TABLE B-IV. Process control summary.

Operation	MIL-STD-883		Paragraph
	Method	Condition	
Wire bonding	2011 2023		B.3.37.1

Downloaded from http://www.everyspec.com

B.3.3.7.1 Wire bonding.

B.3.3.7.1.1 General. A process machine/operator evaluation shall be performed:

a. When a machine is put into operation. In addition for product level S, an evaluation shall be performed when the machine is taken out of operation, unless an evaluation was performed within the last hour.

b. Periodically while in operation, not to exceed 4 hours.

c. When the operator is changed.

d. When any machine part or an adjustment has been made.

e. When the spool of wire is changed.

f. When a new oscillator device is started. (Unless the machine was evaluated using test samples that also simulate the new oscillator device.)

B.3.3.7.1.2 Test samples. Test samples that simulate the production oscillator may be destructively evaluated in lieu of the product.

B.3.3.7.1.3 Process machines. Process machines not meeting the evaluation requirements shall not be used.

B.3.3.7.1.4 Corrective action of process machine. A process machine may be returned to operation only after appropriate corrective action has been implemented and the machine has been evaluated and passed testing in accordance with table XIV as required.

B.3.3.7.1.5 Information record. An information record shall be maintained and identifiable to each machine, operator, shift, and date of test.

B.3.3.7.1.6 Wire bonding. Wire bond strength testing shall be performed as follows.

B.3.3.7.1.6.1 Process machine/operator evaluation. A minimum sample of 10 wires total from 3 devices shall be destructively pull tested in accordance with MIL-STD-883, method 2011, for product level B.

a. The sample shall consist of bonds to elements typical of oscillator assembly operation for product level B. For product level S, a sample of 15 wires minimum from 3 devices shall be pulled on each sample and shall include as a minimum one wire each from a typical transistor, diode, capacitor, and resistor chip and 5 wires from a header to substrate, as applicable. If more than one wire size or type is present at least 4 samples of each size and type shall be tested and pull strength measurements shall be read and recorded.

b. Evaluation results are acceptable if no failure occurs below the present value given in table I of MIL-STD-883, method 2011. If any of the sample wires fail, the bonder shall be deactivated and corrective action taken. When a new sample has been prepared, tested, and passed this procedure, the machine/operator has been certified or recertified, it can be returned to production.

Downloaded from http://www.everyspec.com

B.3.3.7.1.7 Lot sample bond strength. From each wire bonding lot, a sample of at least two oscillators shall be nondestructively tested in accordance with MIL-STD-883, method 2023. Oscillators with known visual wire bonding rejects shall not be excluded from this sample.

a. A wire bonding lot consist of oscillators that are consecutively bonded using the same set-up and wire, by one machine/operator during the same period not to exceed 4 hours.

b. In each sample oscillator, at least 15 wires shall be tested including 1 wire from each type of transistor, diode, capacitor, and resistor chips, 3 wires from each type of integrated circuit, and 5 wires connecting package leads, as applicable. If there are less than 15 wires in the oscillator, all wires shall be tested. Sample oscillators shall be inspected for lifted wires. Lifted wires shall be counted as nondestructive pull test failures.

c. The wire bonding lot shall be acceptable if no failure occurs. If one wire/bond fails another sample of two oscillators shall be selected and 100 percent nondestructively tested. If the second sample contains no failures, the wire bonding lot is acceptable. If the second sample also contains failure(s), or more than one wire/bond fails in the first sample, the bonding machine/operator shall be removed from operation.

d. The failures shall be investigated and appropriate corrective action shall be implemented. The machine/operator shall be recertified in accordance with B.3.3.7.1.6.1 before being returned to operation. All oscillators bonded since the previous certification (lot sample bond strength test) shall be subjected to 100 percent nondestructive bond strength testing.

Downloaded from http://www.everyspec.com

PROCEDURE FOR QUALIFICATION INSPECTION

C. SCOPE

C.1 Scope. This appendix contains the procedure for qualification inspection for oscillators covered by this specification. This Appendix is a mandatory part of the specification. This appendix also outlines the procedure for extending qualification to the various product assurance levels, frequency range as well as temperature ranges and specification sheets. The information contained herein is intended for compliance.

C.2. APPLICABLE DOCUMENTS. This section is not applicable to this appendix.

C.3. SUBMISSION

C.3.1 Product assurance levels. Qualification of the C level is predicated upon meeting the qualification requirements for B level (see C.4.1). Qualification of the S level can be the basis for extending qualification to the B level and also the C level (see C.4.1). The procedure for submitting samples to become qualified for level B and level S is specified in C.3.2

C.3.2 Sample.

C.3.2.1 Single-type submission. A sample consisting of eight sample units of the specific crystal oscillator for which qualification is sought shall be submitted. For microelectronic technology oscillators, an additional three samples (or five samples, see table IV) shall be submitted for qualification in order to perform the internal water vapor content test. Alternatively, the manufacturer may use samples which have previously been subjected to other qualification inspections for internal water vapor content testing.

C.3.2.2 Combined-type submission. To obtain qualification for the frequency and temperature range for an individual specification sheet for which qualification is sought, samples for testing shall be selected on the following basis:

a. Four sample units from lots produced having the lowest frequency, widest operating temperature range, and most stringent frequency-temperature accuracy over that range.

b. Four sample units having the lowest frequency, widest operating temperature range, and most stringent frequency-temperature accuracy over that range from each group of lots produced of the intermediate frequencies. Groups are determined on the following basis:

   (1) A crystal resonator change, for example: fundamental mode, third overtone or fifth overtone, etc.

   (2) A change in the printed wiring board for discrete component construction or the substrate for hybrid construction.

   (3) A change in the component configuration on the printed wiring board or substrate.

c. Four sample units from lots produced having the highest frequency, widest operating temperature range, and most stringent frequency-temperature accuracy over that range. For microelectronic technology oscillators, an additional three samples (or five samples, see table IV) shall be submitted for qualification in order to perform the internal water vapor content test. Alternatively, the manufacturer may use samples which have previously been subjected to other qualification inspections for internal water vapor content testing.

C.4. EXTENSION OF QUALIFICATION

C.4.1 Extent of qualification. Extent of qualification shall be restricted to the individual specification sheet unless otherwise specified herein. Qualification of one crystal oscillator may be the basis for qualification of another crystal oscillator within the original frequency range and as indicated in tables C-I, C-II, and C-III. The contractor also has the option of proposing alternative extension of qualification

Downloaded from http://www.everyspec.com

groupings for approval by the qualifying activity. Extension of qualification shall be restricted to the same manufacturing facility, using the same or similar manufacturing processing and materials.

TABLE C-I. Extent of qualification of product assurance level.

Qualification of product assurance level	Will qualify product assurance level
B	B,C
S	B,S,C

TABLE C-II. Extent of qualification for temperature range.

Qualification of temperature range 1/	Will qualify temperature range
A	A, B, C, D, E
B	B, C, D, E
C	C
D	C, D, E
E	C, E

1/ S level qualification samples, which have been final-frequency tested over both the A temperature range and B temperature range, will qualify B temperature range to the A temperature range.

TABLE C-III. Extent of qualification by specification sheet.

Qualification of specification sheet	Will qualify specification range
MIL-PRF-55310/11	MIL-PRF-55310/11, /15, and /18
MIL-PRF-55310/15	MIL-PRF-55310/11, /15, and /18
MIL-PRF-55310/18	MIL-PRF-55310/11, /15, and /18
MIL-PRF-55310/8	MIL-PRF-55310/8, /14, /16, and /17
MIL-PRF-55310/14	MIL-PRF-55310/8, /14, /16, and /17
MIL-PRF-55310/16	MIL-PRF-55310/8, /14, /16, and /17
MIL-PRF-55310/17	MIL-PRF-55310/8, /14, /16, and /17

Downloaded from http://www.everyspec.com

Acceleration	3.6.41	14
	4.8.42	51
Acceleration (nonoperating)	3.6.41.1	14
	4.8.42.1	51
Acceleration (operating)	3.6.41.2	14
	4.8.42.2	51
Acceleration sensitivity	3.6.17	10
	4.8.18	38
	6.4.1	56
Acceleration sensitivity, 2 g tip-over	3.6.17.2	10
	4.8.18.2	38
Acceleration sensitivity, random vibration	4.8.18.3.2	39
Acceleration sensitivity, sinusoidal vibration	4.8.18.3.1	39
Acceleration sensitivity, steady-state	3.6.17.1	10
	4.8.18.1	38
Acceleration sensitivity, vibration	3.6.17.3	10
	4.8.18.3	39
Accumulated time error	3.6.31	12
	4.8.32	46
Accuracy	3.5.6	7
	3.6.5	8
	3.6.9	8
	3.6.32	12
	4.3.6	17
	4.3.10	18
	4.8.6	30
	4.8.10	32
	4.8.33	46
	6.4.4	57
	6.4.22	59
	6.4.24	59
	6.4.33	60
	4.8.32	46
Acoustic noise (operating)	3.6.39	13
	4.8.40	50
Acquisition requirements	6.2	55
Air flow conditions for temperature tests	4.3.9	18
Allan deviation	3.6.16.5	10
	4.8.17.5	37
	6.4.2	56
Ambient pressure	3.6.45	14
	4.8.46	52

Downloaded from http://www.everyspec.com

Ambient pressure (nonoperating)	3.6.45.1 4.8.46.1	14 52
Ambient pressure (operating)	3.6.45.2 4.8.46.2	14 52
Amplitude noise	3.6.16.4 4.8.17.4	10 37
	6.4.3	57
APPLICABLE DOCUMENTS	2. A.2. (appendix A) B.2. (appendix B) C.2 (appendix C)	3 73 77 89
Assembled dice evaluation requirements	TABLE B-1	81
Assembled passive element evaluation requirements	TABLE B-II	83
Assembled substrate evaluation requirements	TABLE B-III	84
Basic bench test configuration	FIGURE 1	64
Basic test conditions	4.3.7	17
Beryllium oxide package identifier	3.7.5	16
BIT, oven operating temperature	3.6.33.1 4.8.34.1	12 46
BIT, oven supply voltage	3.6.33.2 4.8.34.2	12 46
BIT, RF output voltage	3.6.33.3 4.8.34.3	12 86
Built-in-test (BIT) (types 4 and 6)	3.6.33 4.8.34	12 46
Burn-in	4.4.3 4.4.4	19 19
Calibration	3.5.7	7
Changes from previous issue	6.7	63
Characteristics	B.3.3.5.4.1.3 4.4.5	85 19
Class 1	1.2.3 3.5.1.1	2 5
Class 2	1.2.3 3.5.1.2	2 5
Class 3	1.2.3	2
Classification	4.1	17
Cleaning	3.3.2 A.3.4.1	4 74

Downloaded from http://www.everyspec.com

Cleanliness and atmosphere control in work areas	A.3.2	73
Clock accuracy (corrected pulse train output)	3.6.32.1 4.8.33.1	12 46
Clock accuracy (digital time-of-day output)	3.6.32.2 4.8.33.2	12 46
Clock accuracy (type 7)	3.6.32 4.8.33 6.4.4	12 46 57
Combined-type submission	C.3.2.2	89
Components	3.3.2 B.3.2	4 78
Compound bonding	A.3.4.4	75
Conducted interference	3.6.36 4.8.37	13 48
Conductor resistivity	B.3.3.5.4.2.2	85
Conductor thickness	B.3.3.5.4.2.1	85
Control of critical process and procedure (process control)	B.3.3.7	86
Corrective action of process machine	B.3.3.7.1.4	87
Crystal oscillators (XO)	6.4.5	57
Crystal unit	B.3.2.1c 6.4.5	78 57
Dash number	1.2.1.2	1
Information record	B.3.3.7.1.5	87
Definition	B.3.3.5.1	83
Definitions	6.4	56
Design for nuclear survivability	3.5.9	7
Design, processing, manufacturing equipment, and materials instructions	A.3.1	73
Deviation (slope) sensitivity	3.6.30.3 4.8.31.3	12 44
Deviation linearity	3.6.30.5 4.8.31.5	12 45
	6.4.6	57
	FIGURE 15	72
Deviation slope polarity	3.6.30.4 4.8.31.4	12 44
Die shear strength testing	B.3.3.5.4.3.3	86

Downloaded from http://www.everyspec.com

Disposition of sample units	4.7.1.4.6 4.7.1.5.3 4.7.2.1.3	24 26 27
Dose rate	3.6.47.2 4.8.48.2	15 53
Duty cycle	3.6.22 4.8.23	11 41
	6.4.7	57
Duty cycle (square wave output waveform)	4.8.23	41
Duty cycle measurement level	TABLE IX	41
Electrical	B.3.3.5.4.1.3	85
Electrical test specifications	B.3.3.2.1 B.3.3.3.1	80 82
	B.3.3.5.2	84
Electrical testing	B.3.3.2.2.1	82
Electrical-frequency-control	3.6.6.2 4.8.7.2 6.4.8	8 31 57
Element	B.3.3.1.4.3	79
Element evaluation	B.3.3.1.3	79
Element replacement	A.3.4.5	75
Element wire rebonding	A.3.4.2	75
Environment control	A.3.3	74
Equilibrium conditions	4.3.4	17
Evaluation of assembled die	B.3.3.2.2	80
Evaluation of assembled substrate elements	B.3.3.5.4	84
Evaluation of crystals	B.3.3.6	86
Evaluation of passive element lots	B.3.3.3.2	82
Evaluation of passive elements	B.3.3.3	82
Explosion (operating)	3.6.42 4.8.43	14 51
EXTENSION OF QUALIFICATION	C.4	89
Extent of qualification	C.4.1	89
Extent of qualification by specification sheet	TABLE C-III	90
Extent of qualification for temperature range	TABLE C-II	90
Extent of qualification of product assurance level	TABLE C-1	90

Downloaded from http://www.everyspec.com

Failed sample(s)	4.7.1.5.1.1	26
Failures	4.5.3 4.7.2.1.2	21 27
Fall time	6.4.10	57
Film adhesion	B.3.3.5.4.2.3	85
Frequency adjustment	4.8.7	31
Frequency adjustment (frequency-adjustable oscillators)	3.6.6	8
Frequency aging	3.6.34 4.8.35	12 47
Frequency aging (long-term stability)	6.4.11	58
Frequency aging (type 1 and type 2)	3.6.34.1 4.8.35.1	12 47
Frequency aging (type 3, 4, 5, 6, 7, and 8)	3.6.34.2 4.8.35.2	13 47
Frequency aging (types 3, 5, and 7)	4.8.35.2.1	47
Frequency aging (types 4, 6, and 8)	4.8.35.2.2	48
Frequency deviation (types 2, 5, and 6)	3.6.30 4.8.31	11 44
Frequency offset	6.4.14	58
Frequency offset at reference temperature	3.7.2	16
Frequency warm-up	3.6.7 4.8.8 6.4.18	8 31 58
Frequency-environment tolerance	3.6.37 4.8.38 6.4.12	13 48 58
Frequency-load tolerance	3.6.14 4.8.15	9 36
Frequency-temperature slope at reference temperature	3.6.11 4.8.12 6.4.15	9 34 58
Frequency-temperature stability	3.6.10 4.8.11 6.4.16	9 34 58
Frequency-temperature stability (one-half temperature cycle)	3.6.10.1 4.8.11.1	9 34
Frequency-temperature stability including hysteresis	3.6.10.2 4.8.11.2	9 34
Frequency-temperature stability including hysteresis and trim effect	3.6.10.4	9

Downloaded from http://www.everyspec.com

	4.8.11.4	34
Frequency-temperature stability including trim effect (one-half temperature cycle)	3.6.10.3	9
	4.8.11.3	34
Frequency-thermal transient stability	3.6.12	9
	4.8.13	35
Frequency-voltage tolerance	3.6.13	9
	4.8.14	36
	6.4.17	58
Fungus	3.6.54	15
	4.8.55	55
General	2.1	3
	B.3.3.7.1.1	87
General rework provisions	A.3.4.1	74
Government documents	2.2	3
Group A inspection	4.7.1.4	23
	TABLE V	25
Group B inspection	4.7.1.5	25
Group C inspection	4.7.2.1	26
	TABLE VII	28
Group A and group B, zero defect sampling plan	TABLE VI	25
Harmonic and subharmonic distortion	3.6.23	11
	4.8.24	41
	6.4.19	58
Harmonic and subharmonic distortion measurements	FIGURE 10	69
Hermetic seal	3.6.1.2	7
	4.8.2.2	27
High vacuum seal	6.4.20	59
High vacuum seal (types 4 and 6)	3.6.1.3	7
	4.8.2.3	29
Initial accuracy at reference temperature	3.6.5	8
	4.8.6	30
	6.4.22	59
Initial frequency aging	6.4.23	59
Initial frequency aging (types 4 and 6)	3.6.8	8
	4.8.9	31
Initial frequency-accuracy including trim effect (one-half temperature cycle)	4.8.10.3	33
Initial frequency-temperature accuracy	3.6.9	8
	4.8.10	33

Downloaded from http://www.everyspec.com

	6.4.24	59
Initial frequency-temperature accuracy (one-half temperature cycle)	3.6.9.1	8
	4.8.10.1	32
Initial frequency-temperature accuracy including hysteresis	3.6.9.2	8
	4.8.10.2	32
Initial frequency-temperature accuracy including hysteresis and trim effect	3.6.9.4	9
	4.8.10.4	33
Initial frequency-temperature accuracy including trim effect (one-half temperature cycle)	3.6.9.3	8
Input current-power	3.6.4	8
	4.8.5	30
Input power aging	6.4.25	59
Input power aging (types 4 and 6)	3.6.35	13
	4.8.36	48
Inspection conditions	4.3	17
Inspection lot	4.7.1.3.2	23
Inspection of product for delivery	4.7.1	22
Intended use	6.1	55
Interface and physical dimensions	3.5	5
Internal conductors (microelectronic technology only)	A.3.5	76
Internal visual inspection class 2 crystal oscillators	4.4.2	18
Internal water vapor content	4.8.56	55
“JAN" brand	3.7	16
	3.7.4	16
Lead finish	3.5.3.2	5
Lead or terminal material	3.5.3.1	5
Leadless chip carriers (LCC)	4.8.49.2	54
Lid seal rework	A.3.4.6.1	76
Listing on the QPL	3.3	4
	6.4	56
	A.1	73
Load test circuit	3.5.8	7
Location of element evaluation	B.3.3.1.3	79
Lot sample bond strength	B.3.3.7.1.7	88
Lots resubmitted for burn-in	4.4.5	19
Magnetic field (operating)	3.6.43	14

Downloaded from http://www.everyspec.com

	4.8.44	52
Magnetic field sensitivity	3.6.18 4.8.19 6.4.26	10 39 59
Magnetic field sensitivity, ac	3.6.18.2 4.8.19.2	10 40
Magnetic field sensitivity, dc	3.6.18.1 4.8.19.1	10 39
Manufacturer and user frequency offset calibrated	3.5.7.2	7
Manufacturer and user nominal frequency calibrated	3.5.7.3	7
Manufacturer-calibrated	3.5.7.1	7
Marking	3.7	16
Materials	3.4	5
Mechanical-frequency-adjustment	3.6.6.1 6.4.27	8 59
Mechanical-frequency-adjustment (frequency-adjustable oscillators)	4.8.7.1	31
Metals	3.5.2	5
Methods of inspection	4.8	27
Microcomputer compensated crystal oscillator (MCXO)	6.4.28	60
Microelectronic technology	B.3.3	79
Military Part or Identifying Number (PIN)	1.2.1	1
Modulation distortion	3.6.30.6 4.8.31.6 6.4.29	12 45 60
Modulation frequency response	3.6.30.7 4.8.31.7 6.3.40	12 45 60
Modulation-control input impedance (types 2, 5, and 6)	3.6.29 4.8.30	11 43
Modulation-control input voltage (types 2, 5, and 6)	3.6.2.3 4.8.3.3	7 29
Moisture resistance	3.6.49 4.8.50	15 54
Neutrons	3.6.47.3 4.8.48.3	15 53
Nickel plate or undercoating	6.5.4	63
NOMINALl	1.2.1.4 3.5.7.3	2 7

Downloaded from http://www.everyspec.com

Non-Government publications	2.3	4
Noncompliance	4.7.2.1.4	27
NOTES	6.	55
O-ring-solder seal (nonhermetic)	3.6.1.1 4.8.3.1	7 29
Order of precedence	2.4	4
Oscillator element evaluation requirements	B.3.3.3	82
Oscillator input current-power	3.6.4.1 4.8.5.1	8 30
Oscillator supply voltage	3.6.2.1 4.8.3.1	7 29
Other Government documents, drawings, and publications	2.2.2	3
Output impedance	3.6.25 4.8.26	11 42
Output logic voltage levels	TABLE I	11
Output logic voltage levels (square wave output waveform)	3.6.20.3 4.8.21.3	11 40
Output power (sinusoidal waveform)	3.6.20.2 4.8.21.2	10 40
Output suppression (gated oscillator)	3.6.27 4.8.28	11 43
Output voltage	3.6.20.1 4.8.21.1	10 40
Output voltage-power	3.6.20 4.8.21	10 40
Output waveform	3.6.19 4.8.20	10 40
Oven-controlled crystal oscillator (OCXO)	6.4.31	60
Oven-controlled/voltage controlled crystal oscillator (OCVCXO)	6.4.32	60
Oven input current-power (types 4 and 6)	3.6.4.2 4.8.5.2	8 30
Oven supply voltage (types 4 and 6)	3.6.2.2 4.8.3.2	7 29
Overall frequency accuracy	3.5.6 6.4.33	6 60
Overvoltage survivability	3.6.3 4.8.4	7 29
Package	3.5.1	5

Downloaded from http://www.everyspec.com

Package and lead materials and finishes	3.5.3	5
Package body finish	3.5.4	6
Packaged integrated circuits	B.3.2.4	78
Packaged passive components	B.3.2.2	78
Packaged semiconductor devices	B.3.2.3	78
PACKAGING	5.	55
Packaging requirements	5.1	55
Performance	3.6	7
Periodic inspection	4.7.2	26
Phase angle modulation (deterministic process)	6.4.34	60
Phase noise (random process)	6.4.35	60
Phase noise, acoustic	3.6.16.3 4.8.17.3	10 37
Phase noise, random vibration	3.6.16.2 4.8.17.2	10 36
Phase noise, steady-state	3.6.16.1 4.8.17.1	10 36
Physical dimension	B.3.3.5.4.1.1	84
Pins	3.6.51.2 4.8.52.2	15 54
Polymeric adhesives	B.3.3.4	83
Polymeric materials	3.4a	5
Power supplies	4.3.6	17
Pre burn-in electrical testing	4.4.3	19
Precautions	4.3.8	18
Precision of measurement	4.3.10	18
Printed wiring	B.3.2.5	79
Process control summary	TABLE B-IV	86
Process machine/operator evaluation	B.3.3.7.1.1	87
Process machines	B.3.3.7.1.3	87
Product level	1.2.1.1	1
Product level C	4.7.1.1 4.7.1.4.1	22 23
Product level B and S	4.7.1.2 4.7.1.4.2	23 24
Product level B oscillators	4.7.1.4.3.1	24

Downloaded from http://www.everyspec.com

Product level S oscillators	4.7.1.3.2	24
Production and inspection lot	4.7.1.3	23
Production lot	4.7.1.3.2	23
Quadrature phase detection method	FIGURE 5	66
Qualification inspection	4.5 TABLE IV	21 22
Qualification	3.2 4.1b	4 17
Qualified products list	3.3 6.3	4 55
Quartz crystals	B.3.2.1	78
Radiation hardness (operating)	3.6.47 4.8.48	15 53
Radiation testing requirement	B.3.3.2.3.2.4	81
Re-entrant isolation (multi-output oscillators)	3.6.26 4.8.27	11 42
Recycled, recovered, or environmentally preferable materials	3.8	17
Rectangular output waveform	FIGURE 8	68
Rejected lots	4.7.1.4.5.1	24
REQUIREMENTS	3.	4
Resistance to soldering heat	3.6.48 4.8.49	15 53
Resistance to solvents	3.6.53 4.8.54	15 55
Retention of qualification	4.6	21
Retrace	3.6.15 4.8.16 6.4.36	9 36 60
Rework provisions	A.3.4	74
Rise and fall time measurement levels	TABLE VIII	41
Rise and fall times	3.6.21	11
Rise and fall times (square wave output waveform)	4.8.22	40
Rise time	6.4.37	60
Rubidium-crystal oscillator (RbXO)	6.4.38	61
Salt atmosphere (corrosion)	3.6.50 4.8.51	158 54
Sample	C.3.2	89

Downloaded from http://www.everyspec.com

	4.5.1	21
Sample size	B.3.3.2.3.2.1	80
Sampling plan	4.7.2.1.1	27
Sampling procedure (subgroup 1).	4.7.1.4.3	24
Sampling procedure (subgroup 2)	4.7.1.4.4	24
Sampling procedure (subgroup 3)	4.7.1.4.5	24
SCOPE	1. A. (appendix A) B. (appendix B) C. (appendix C)	1 73 77 89
Screening	4.4	18
Screening for oscillators of discrete component construction	TABLE II	19
Screening for oscillators of hybrid construction	TABLE III	20
Seal	3.6.1 4.8.2	7 27
Seal rework	A.3.4.6	76
Sequence of testing	B.3.3.1.1	79
Serial number	3.7.1	16
Shock (specified pulse)	3.6.40 4.8.41	14 50
Shock (specified pulse) (nonoperating)	3.6.40.1 4.8.41.1	14 50
Shock (specified pulse) (operating)	3.6.40.2 4.8.41.2	14 51
Short-term stability	3.6.16 4.8.17	10 36
Short-term stability Allan deviation test procedure	FIGURE 7	67
Single-type submission	C.3.2.1	89
Solder dip (retinning) leads	3.5.3.3	6
Solder pads	3.6.51.3 4.8.52.3	15 54
Solderability	3.6.52 4.8.53	15 54
Special test methods	4.3.3	17
Specification sheets	3.1	4
Specifications, standards, and handbooks	2.1.1	3
Specified nominal frequency	1.2.1.4	2
Spurious response	3.6.24	11

Downloaded from http://www.everyspec.com

	4.8.25 6.4.39	42 61
Standard environmental conditions	4.3.5	17
Standard test conditions	4.3.1	17
Startup time	3.6.28 4.8.29	11 43
Statement of scope	1.1 A.1 (appendix A) B.1 (appendix B) C.1 (appendix C)	1 73 77 89
Statistical process control (SPC)	3.3.1	4
Storage temperature	3.6.46 4.8.47	14 53
Subject term (key word) listing	6.6	63
SUBMISSION	C.3	89
Substrate wire rebonding	A.3.4.4	75
Supply voltage	3.6.2 4.8.3	17 29
Syntonization	6.4.40	61
Syntonization energy (type 8)	3.6.4.3 4.8.5.3	8 30
Temperature coefficient of resistance (TCR)	B.3.3.5.4.3.1	85
Temperature compensated crystal oscillator (TCXO)	6.4.41	61
Temperature compensated/voltage controlled crystal oscillator (TCVCXO)	6.4.42	61
Temperature range	1.2.1.3	1
Terminal strength (lead integrity)	3.6.51 4.8.52	15 54
Terminals	3.6.51.1 4.8.52.1	15 54
Terms, definitions, methods, and symbols	6.4	56
Test configuration for amplitude noise measurement	FIGURE 6	67
Test configuration for determining isolation between output ports	FIGURE 11	70
Test configuration for determining suppression of gated oscillators	FIGURE 12	70
Test configuration for startup time measurement	FIGURE 13	71
Test fixture	4.3.2	17

Downloaded from http://www.everyspec.com

Test routine	4.5.2	21
Test samples	B.3.3.7.1.2	87
Thermal shock (nonoperating)	3.6.44 4.8.45	14 52
Through-hole mounting packages (terminals or pins)	4.8.49.1	53
Total deviation, dc control	3.6.30.1 4.8.31.1	11 44
Total deviation, modulation	3.6.30.2 4.8.31.2	11 44
Total dose	3.6.47.1 4.8.48.1	15 53
Total frequency deviation	6.4.43	61
Trim effect	6.4.44	61
TTL and CMOS test loads	FIGURE 9	68
Types	1.2.2	2
Typical oscillator retrace characteristic	FIGURE 4	66
Typical oscillator thermal transient characteristic	FIGURE 3	65
Typical oscillator warm-up characteristic	FIGURE 2	64
Uncased quartz resonators	B.3.2.1d	78
VCXO test configurations	FIGURE 14	71
VERIFICATION	4.	17
Vibration	3.6.38 4.8.39	13 49
Vibration, random (nonoperating)	3.6.38.3 4.8.39.3	13 49
Vibration, random (operating)	3.6.38.4 4.8.39.4	13 50
Vibration, sinusoidal (nonoperating)	3.6.38.1 4.8.39.1	13 49
Vibration, sinusoidal (operating)	3.6.38.2 4.8.39.2	13 49
Visual and mechanical inspection	4.8.1	27
Visual inspection	4.4.2 B.3.3.2.2.2 B.3.3.3.2.2	18 80 82
Visual inspection (subgroup 1)	B.3.3.5.4.1	84
Visual inspection of die	B.3.3.2.2.2	80
Visual inspection of passive elements lots	B.3.3.3.2.3	82

Downloaded from http://www.everyspec.com

Voltage controlled crystal oscillators (VCXO)	6.4.4.5	61
Weight	3.5.5	6
Wire bond strength testing	B.3.3.2.3.2.2	80
Wire bond strength testing (subgroup 2)	B.3.3.3.2.3.2	83
Wire bonding	B.3.3.7.1	87
Workmanship	3.8	17

Downloaded from http://www.everyspec.com

Custodians:
Army - CR
Navy - EC
Air Force - 85

Review activities:
Army - AR, MI, SM
Navy - AS, CG, MC
Air Force - 19, 99
NASA - NA
DLA - CC

Preparing activity:
Army - CR

Agent:
DLA - CC

(Project 5955-0716)

Downloaded from http://www.everyspec.com

STANDARDIZATION DOCUMENT IMPROVEMENT PROPOSAL

INSTRUCTIONS

1. The preparing activity must complete blocks 1, 2, 3, and 8. In block 1, both the document number and revision letter should be given.
2. The submitter of this form must complete blocks 4, 5, 6, and 7.
3. The preparing activity must provide a reply within 30 days from receipt of the form.

NOTE: This form may not be used to request copies of documents, nor to request waivers, or clarification of requirements on current contracts. Comments submitted on this form do not constitute or imply authorization to waive any portion of the referenced document(s) or to amend contractual requirements.

I RECOMMEND A CHANGE:	1. DOCUMENT NUMBER MIL-PRF-55310C	2. DOCUMENT DATE (YYMMDD)

3. DOCUMENT TITLE
OSCILLATOR, CRYSTAL CONTROLLED, GENERAL SPECIFIC ATION FOR

4. NATURE OF CHANGE (Identify paragraph number and include proposed rewrite, if possible. Attach extra sheets as needed.)

5. REASON FOR RECOMMENDATION

6. SUBMITTER

a. NAME (Last, First, Middle initial)	b. ORGANIZATION	
c. ADDRESS (Include Zip Code)	d. TELEPHONE (Include Area Code) (1) Commercial (2) AUTOVON (If applicable)	7. DATE SUBMITTED (YYMMDD)

8. PREPARING ACTIVITY

a. NAME COMMANDER, US ARMY COMMUNICATIONS -ELECTRONICS COMMAND ATTN: AMSEL-LC-LEO-E-EP	b. TELEPHONE (Include Area Code) (1) Commercial 908-544-3441/3148 (2) AUTOVON 995-3441/3148
c. ADDRESS (Include Zip Code) FORT MONMOUTH, NJ 07703-5023	**IF YOU DO NOT RECEIVE A REPLY WITHIN 45 DAYS, CONTACT:** Defense Quality and Standardization Office 5203 Leesburg Pike, Suite 1403, Falls Church, VA 22041-3466 Telephone (732) 532-9139 AUTOVON 992-9139