Downloaded from http://www.everyspec.com

INCH-POUND
MIL-PRF-39006G
w/AMENDMENT 1
16 April 2010
SUPERSEDING
MIL-PRF-39006G
22 November 2006

PERFORMANCE SPECIFICATION

CAPACITOR, FIXED, ELECTROLYTIC (NONSOLID ELECTROLYTE), TANTALUM, ESTABLISHED RELIABILITY, GENERAL SPECIFICATION FOR

FAILURE RATE LEVEL L INACTIVE
FOR NEW DESIGN AFTER 27 MAY 1976

This specification is approved for use by all Departments and Agencies of the Department of Defense.

1. SCOPE

1.1 Scope. This specification covers tantalum, electrolytic (nonsolid electrolyte), fixed capacitors (polarized and nonpolarized), hermetically sealed (see 6.7) in metal cases (see 6.1). Capacitors covered by this specification have reliability established for failure rate levels (FRL) ranging from 2.0 (or 1.0) percent to 0.001 percent per 1,000 hours in accordance with MIL-STD-690. These FRL are established at a 60-percent confidence level and are maintained at a 10-percent producer's risk. A Part Per Million (ppm) quality system is used for assessing the average outgoing quality of ER capacitors supplied to this specification. Statistical Process Control (SPC) techniques are required in the manufacturing process to minimize variation in production of ER capacitors supplied to the requirements of this specification.

1.2 Classification. Capacitors covered by this specification are classified by the style as specified (see 3.1).

1.2.1 Part or Identifying Number (PIN). The military PIN will consist of the specification sheet, and an assigned dash number (see 3.1), as shown in the following example:

M39006	/22	-8001	- (see note below)
Military designator	Specification sheet number	Dash number	H when specified (see 3.1)

NOTE: Dash number shall include the letter "H" to indicate the optional vibration and shock requirements (i.e., 53.79 g's random vibration, 80 g's sinusoidal vibration, and 500 g's shock) or the "-" will be deleted. The acquiring activity may substitute an “H” designated part in place of a non “H” designated part at their option.

Comments, suggestions, or questions on this document should be addressed to Defense Supply Center, Columbus, ATTN: DSCC-VAT, Post Office Box 3990, Columbus, OH 43218-3990 or emailed to capacitorfilter@dla.mil. Since contact information can change, you may want to verify the currency of this address information using the ASSIST Online database at https://assist.daps.dla.mil .

AMSC N/A FSC 5910

Downloaded from http://www.everyspec.com

2. APPLICABLE DOCUMENTS

2.1 General. The documents listed in this section are specified in sections 3 and 4 of this specification. This section does not include documents cited in other sections of this specification or recommended for additional information or as examples. While every effort has been made to ensure the completeness of this list, document users are cautioned that they must meet all specified requirements of the documents cited in sections 3 and 4 of this specification, whether or not they are listed.

2.2 Government documents.

2.2.1 Specifications, standards, and handbooks. The following specifications, standards, and handbooks form a part of this document to the extent specified herein. Unless otherwise specified, the issues of these documents are those cited in the solicitation or contract (see 6.2).

DEPARTMENT OF DEFENSE SPECIFICATIONS

MIL-DTL-3965 - Capacitor, Fixed, Electrolytic (Nonsolid Electrolyte), Tantalum, General Specification for.

(See supplement 1 for list of associated specifications.)

DEPARTMENT OF DEFENSE STANDARDS

MIL-STD-202 - Electronic and Electrical Component Parts.
MIL-STD-690 - Failure Rate Sampling Plans and Procedures.
MIL-STD-790 - Established Reliability And High Reliability Qualified Product List (QPL) Systems For Electrical, Electronic, and, Fiber Optic Parts Specifications.
MIL-STD-810 - Environmental Engineering Considerations and Laboratory Tests.
MIL-STD-1276 - Leads for Electronic Component Parts.
MIL-STD-1285 - Marking of Electrical and Electronic Parts.

(Copies of these documents are available online at https://assist.daps.dla.mil/ or from the Standardization Document Order Desk, 700 Robbins Avenue, Building 4D, Philadelphia, PA 19111-5094.)

2.3 Non-Government publications. The following documents form a part of this document to the extent specified herein. Unless otherwise specified, the issues of these documents are those cited in the solicitation or contract.

ELECTRONIC INDUSTRIES ALLIANCE (EIA)

EIA-554-1 - Assessment of Outgoing Nonconforming Levels in Parts Per Million (PPM).
EIA-557 - Statistical Process Control Systems.

(Application for copies can be found online at http://www.eia.org/ or should be addressed to the Electronic Industries Alliance (EIA), 2500 Wilson Boulevard, Arlington VA 22201-3834.)

Downloaded from http://www.everyspec.com

SOCIETY OF AUTOMOTIVE ENGINEERS, INTERNATIONAL. (SAE)

SAE-AMS-DTL-23053 Insulation Sleeving, Electrical, Heat Shrinkable, General Specification for.

(Application for copies can be made online at http://www.sae.org/ or should be addressed to the Society of Automotive Engineers International (SAE), 400 Commonwealth Drive, Warrendale, PA 15096.)

2.4 Order of precedence. In the event of a conflict between the text of this document and the references cited herein (except for related specification sheets), the text of this document takes precedence unless otherwise noted. Nothing in this document, however, supersedes applicable laws and regulations unless a specific exemption has been obtained.

3. REQUIREMENTS

3.1 Specification sheets. The individual item requirements shall be as specified herein and in accordance with the applicable specification sheet. In the event of any conflict between requirements of this specification and the specification sheet, the latter shall govern.

3.2 Qualification. Capacitors furnished under this specification shall be products that are authorized by the qualifying activity for listing on the applicable qualified products list (QPL) before contract award (see 4.4 and 6.3). Authorized distributors, which are approved to MIL-STD-790 distributor requirements by the QPL manufacturer, are listed in the QPL.

3.3 QPL system. The manufacturer shall establish and maintain a QPL system for parts covered by this specification. Requirements for this system are specified in MIL-STD-690 and MIL-STD-790. In addition the manufacturer shall also establish a SPC and PPM system that meets the requirements as detailed in 3.3.1 and 3.3.2 respectively. Reliability of capacitors furnished under this specification shall be established and maintained in accordance with the procedures and requirements specified in MIL-STD-690 and MIL-STD-790 with details specified in 4.4.4.1, and 4.5. The reliability rating is identified by the following FR level symbols:

Symbol	FRL level (percent per 1,000 hours)
L	2.0
M	1.0
P	0.1
R	0.01
S	0.001

3.3.1 Statistical Process Control (SPC). The manufacturer shall implement and use SPC techniques in the manufacturing process for parts covered by this specification. The SPC program shall be developed and maintained in accordance with EIA-557. The SPC program shall be documented and maintained as part of the overall product assurance program as specified in MIL-STD-790. Processes for application of SPC techniques should include but are not limited to the following:

Pressing
Sintering
Electro-chemical processing
Sealing
Finishing

Downloaded from http://www.everyspec.com

3.3.2 PPM system. As part of the overall MIL-STD-790 QPL system, the manufacturer shall establish a PPM system of assessing the average outgoing quality of lots in accordance with EIA-554-1. Data exclusion, in accordance with EIA-554-1, may be used with approval of the qualifying activity. The ppm system shall identify the ppm rate at the end of each month and shall be based on 6-month moving average. Style reporting shall include ER style combinations.

3.4 Material. The material shall be as specified herein; however, when a definite material is not specified, a material shall be used which will enable the capacitors to meet the performance requirements of this specification. Acceptance or approval of any constituent material shall not be construed as a guarantee of the acceptance of the finished product.

3.4.1 Case. The case shall be of a corrosion-resisting material or shall be plated or treated to resist corrosion.

3.4.1.1 Sleeving (when applicable). The sleeving shall be of a non-fungus nutrient material. In addition, the material shall not soften, creep, or shrink to a point where any part of the cylindrical portion of the case is left uncovered at any test temperature specified herein. The sleeving shall not obscure the part marking. See 2.3 for guidance on sleeving materials.

3.4.2 Solder and soldering flux. Solder and soldering flux shall be of such quality as to enable the capacitors to meet all of the requirements of this specification.

* 3.4.3 Pure tin. The use of pure tin, as an underplate or final finish, is prohibited both internally and externally. Tin content of capacitor components and solder shall not exceed 97 percent, by mass. Tin shall be alloyed with a minimum of 3 percent lead, by mass (see 6.11). Lead-free, tin alloy high temperature solders may be used where high temperature solder is necessary with approval of the qualifying activity. The tin content of lead-free h temperature solders shall not exceed 97 percent by mass.

3.5 Interface and physical dimension requirements. Capacitors shall meet the interface and physical dimensions specified (see 3.1).

3.5.1 Case. Each capacitor shall be enclosed in a hermetically-sealed metal case (see 3.1) which will prevent leakage or evaporation of the electrolyte and will protect the capacitor element against the entry of contaminants.

3.5.2 Terminals.

3.5.2.1 Solder dip (retinning) leads (axial-wire leads only). Only the manufacturer (or his authorized category B distributor) may solder dip/retin the leads of capacitors supplied to this specification, provided the solder dip process has been approved by the qualifying activity.

3.5.2.1.1 Qualifying activity approval. Approval of the solder dip process will be based on one of the following options:

a. When the original lead finish qualified was hot solder dip lead finish 52 of MIL-STD-1276, the manufacturer shall use the same solder dip process for retinning as is used in the original manufacture of the product or one authorized by the manufacturer with approval based on the method outlined in 3.5.2.1.1b.

   (NOTE: The 200 micro inches maximum thickness requirement is not applicable.)

Downloaded from http://www.everyspec.com

b. When the lead finish originally qualified was not hot solder dip lead finish 52 of MIL-STD-1276 as prescribed in 3.5.2.1.1a, approval for the process to be used for solder dip shall be based on the following test procedure:

(1) Thirty samples of the hermetic seal of any capacitance value for each style and lead finish are subjected to the manufacturer's solder dip process. Following the solder process, the capacitors shall be subjected to the electrical test of group A inspection (including the hermetic seal test if the device is hermetically sealed), with no defects allowed.

(2) Ten of the 30 samples shall then be subjected to the solderability test, with no defects allowed.

(3) The remaining 20 samples shall be subjected to the resistance to soldering heat test followed by the moisture resistance test (or hermetic seal test if the device is hermetically sealed), with no defects allowed.

3.5.2.1.2 Solder dip/retinning options. Only the manufacturer (or his authorized category B distributor) may solder dip/retin as follows:

a. As a corrective action if the lot fails the group A solderability test.

b. After the group A screening test. Following the solder dip/retinning process, the electrical and seal tests specified in group A, subgroup 1 shall be performed on a 13 piece sample randomly selected from the inspection lot. If there are one or more defects, 100 percent of the lot shall then be subjected to the test(s) from which the defect(s) originated. Following the test(s), the manufacturer shall submit the lot to the group A solderability test as specified in 4.6.1.3.3.

3.6 Constant voltage conditioning. When capacitors are conditioned as specified in 4.8.2, there shall be no evidence of mechanical damage or leakage of electrolyte.

3.7 DC leakage. When measured as specified in 4.8.3, the dc leakage shall not exceed the applicable value specified (see 3.1).

NOTE: For non-polarized capacitors, the value applies to measurements in both directions except after environmental tests involving one directional polarization greater than 30 minutes, the value shall apply to the last poled direction only.

3.8 Capacitance. When measured as specified in 4.8.4, the capacitance shall be within the tolerance of the nominal value specified (see 3.1).

3.9 Dissipation factor. When measured as specified in 4.8.5, the dissipation factor shall not exceed the value specified (see 3.1).

3.10 Seal. When capacitors are tested as specified in 4.8.6, there shall be no evidence of leakage.

3.11 Shock (specified pulse). When capacitors are tested as specified in 4.8.7, there shall be no momentary or intermittent contact of 0.5 millisecond (ms) or greater duration.

Downloaded from http://www.everyspec.com

3.12 Vibration, high frequency. When capacitors are tested as specified in 4.8.8, there shall be no intermittent contacts of 0.5 ms or greater duration, open-circuiting or short-circuiting, mechanical damage, or leakage of electrolyte. In addition, capacitors shall meet the following requirements:

DC leakage: Shall not exceed 125 percent of the applicable value specified (see 3.1).

Capacitance: Shall change not more than ±5 percent from the initial measured value (see 3.8).

Dissipation factor: Shall not exceed 115 percent of the applicable value specified (see 3.1).

Visual examination: There shall be no evidence of harmful corrosion (as defined in 3.14), mechanical damage, obliteration of marking, or leakage of electrolyte.

NOTE: This visual examination may be deferred to the requirements of Random Vibration for CLR79, CLR81, CLR90, and CLR91, "H" designated units only.

3.13 Thermal shock. When tested as specified in 4.8.9, capacitors shall meet the following requirements:

* DC leakage: (Except CLR93, CLR79, CLR81, CLR90, and CLR91, see 3.1) Shall not exceed 125 percent of the applicable value specified (see 3.1).

Capacitance: Shall change not more than ±5 percent from the initial measured value (see 3.8).

Dissipation factor: Shall not exceed 115 percent of the applicable value specified (see 3.1).

External examination: There shall be no evidence of leakage of electrolyte.

3.14 Salt atmosphere (corrosion) (for qualification only). When capacitors are tested as specified in 4.8.10, there shall be no harmful corrosion, and the finish shall protect at least 90 percent of any exposed metal surface of the capacitor. There shall be no unwrapping of, or mechanical damage to, the insulating sleeving, when applicable. Marking shall remain legible.

NOTE: Harmful corrosion shall be construed as being any type of corrosion, which in any way interferes with the mechanical or electrical performance of the capacitor.

3.15 Solderability (capacitors with axial-wire lead terminals only, see 3.1). When capacitors are tested as specified in 4.8.11, the dipped portion of the terminations shall conform to the solid-wire termination criteria of method 208 of MIL-STD-202.

3.16 Terminal strength (direct load). When capacitors are tested as specified in 4.8.12, there shall be no loosening of or permanent damage to the terminals, terminal weld or solder, or seal.

3.17 Surge voltage. When tested as specified in 4.8.13, capacitors shall meet the following requirements:

DC Leakage: Shall not exceed the requirements specified in 3.7.

Capacitance: Shall change no more than ±5 percent from the initial measured value (see 3.8).

Dissipation factor: Shall not exceed the requirement specified in 3.9.

Downloaded from http://www.everyspec.com

Visual examination: There shall be no evidence of mechanical damage or leakage of electrolyte.

3.18 Moisture resistance. When tested as specified in 4.8.14, capacitors shall meet the following requirements:

DC leakage: Shall not exceed 125 percent of the applicable value specified (see 3.1).

Capacitance: Shall change not more than the percent specified (see 3.1) from the initial measured value (see 3.8).

Dissipation factor: Shall not exceed 115 percent of the applicable value specified (see 3.1).

Visual examination: There shall be no evidence of harmful corrosion (as defined in 3.14), mechanical damage, obliteration of marking, or leakage of electrolyte.

3.19 Dielectric withstanding voltage (insulated capacitors only, see 3.1). When tested as specified in 4.8.15, the sleeving shall withstand the potential without breakdown.

3.20 Insulation resistance (insulated capacitors only, see 3.1). When measured as specified in 4.8.16, the insulation resistance shall be not less than 100 megohms.

3.21 Low temperature (storage). When tested as specified in 4.8.17, capacitors shall meet the following requirements:

DC leakage: Shall not exceed the applicable value specified (see 3.1).

Capacitance: Shall change not more than the percent specified (see 3.1) from the initial measured value (see 3.8).

Dissipation factor: Shall not exceed the applicable value specified (see 3.1).

External examination: There shall be no evidence of leakage of electrolyte.

3.22 Stability at low and high temperatures. When tested as specified in 4.8.18, capacitors shall meet the following requirements:

Step 1 (+25°C):

DC leakage: Shall not exceed the applicable value specified (see 3.1).

Capacitance: Shall be within the applicable tolerance specified (see 3.1).

Dissipation factor: Shall not exceed the applicable value specified (see 3.1).

Step 2 (-55°C):

Impedance: Shall not exceed the applicable value specified (see 3.1).

Capacitance: Shall change not more than the percent specified (see 3.1) from the step 1 measured value.

Downloaded from http://www.everyspec.com

Step 3 (+25°C):

DC leakage: Shall not exceed the applicable value specified (see 3.1).

Capacitance: Shall change not more than the percent specified (see 3.1) from the step 1 measured value.

Dissipation factor: Shall not exceed the applicable value specified (see 3.1).

Step 4 (+85°C):

DC leakage: Shall not exceed the applicable value specified (see 3.1).

Capacitance: Shall change not more than the percent specified (see 3.1) from the step 1 measured value.

Dissipation factor: Shall not exceed the applicable value specified (see 3.1).

Step 5 (+125°C):

DC leakage: Shall not exceed the applicable value specified (see 3.1).

Capacitance: Shall change not more than the percent specified (see 3.1) from the step 1 measured value.

Dissipation factor: Shall not exceed the applicable value specified (see 3.1).

Step 6 (+25°C):

DC leakage: Shall not exceed the applicable value specified (see 3.1).

Capacitance: Shall change not more than the percent specified (see 3.1) from the step 1 measured value.

Dissipation factor: Shall not exceed the applicable value specified (see 3.1).

Downloaded from http://www.everyspec.com

3.23 Reverse voltage (when specified, see 3.1). When tested as specified in 4.8.19, capacitors shall meet the following requirements:

DC leakage: Shall not exceed 125 percent of the applicable value specified (see 3.1).

Capacitance: Shall change not more than the percent specified (see 3.1) from the initial measured value (see 3.8).

Dissipation factor: Shall not exceed the applicable value specified (see 3.1).

3.24 Life at 85°C.

3.24.1 2,000-hour (qualification inspection). When tested as specified in 4.8.20.1, capacitors shall meet the following requirements:

DC leakage (at 85°C and 25°C): Shall not exceed 125 percent of the applicable value specified (see 3.1).

Capacitance: Shall change not more than the percent specified (see 3.1) from the initial measured value (see 3.8).

Dissipation factor: Shall not exceed the applicable value specified (see 3.1).

Visual examination: There shall be no damage, obliteration of marking, or leakage of electrolyte.

3.24.2 10,000-hour (group B inspection) and extended life. When tested as specified in 4.8.20.2 or 4.8.20.3, capacitors shall meet the following requirements:

DC leakage (at 85°C): Shall not exceed 125 percent of the applicable value specified (see 3.1).

DC leakage (at 25°C): Shall not exceed the applicable value specified (see 3.1).

Capacitance: Shall change not more than the percent specified (see 3.1) from the initial measured value (see 3.8).

Dissipation factor: Shall not exceed the applicable value specified (see 3.1).

Dielectric withstanding voltage (insulated capacitors only): Shall be as specified in 3.19.

Insulation resistance (insulated capacitors only): Shall be as specified in 3.20.

Visual examination: There shall be no damage, obliteration of marking, or leakage of electrolyte.

* 3.25 AC ripple life at 85°C (CLR93, CLR79, CLR81, CLR90, and CLR91 only). When tested as specified in 4.8.21, capacitors shall meet the following requirements:

DC leakage: Shall not exceed the applicable value specified (see 3.1).

Capacitance: Shall not exceed the applicable value specified (see 3 1).

Dissipation factor: Shall not exceed the applicable value specified (see 3.1).

Downloaded from http://www.everyspec.com

Visual examination: There shall be no damage, obliteration of marking, or leakage of electrolyte.

3.26 Random vibration (CLR79, CLR81, CLR90, and CLR91 "H" designated units only). When capacitors are tested as specified in 4.8.22, there shall be no intermittent contacts of 0.5 ms or greater duration. In addition, capacitors shall meet the following requirements:

DC leakage: Shall not exceed 125 percent of the applicable value specified (see 3.1).

Capacitance: Shall change not more than ±5 percent from the initial measured value (see 3.8).

Dissipation factor: Shall not exceed 115 percent of the applicable value specified (see 3.1).

Visual examination: There shall be no evidence of harmful corrosion (as defined in 3.14), mechanical damage, obliteration of marking, or leakage of electrolyte.

3.27 Life at 125°C. When tested as specified in 4.8.23, capacitors shall meet the following requirements:

DC leakage (at 125°C and 25°C): Shall not exceed the applicable value specified (see 3.1).

Capacitance: Shall change not more than the percent specified (see 3.1) from the initial measured value (see 3.8).

Dissipation factor: Shall not exceed the applicable value specified (see 3.1).

Dielectric withstanding voltage (insulated capacitors only): Shall be as specified in 3.19.

Insulation resistance (insulated capacitors only): Shall be as specified in 3.20.

Visual examination: There shall be no damage, obliteration of marking, or leakage of electrolyte.

3.27.1 2,000-hour (group C inspection). When tested as specified in 4.8.23.1, capacitors shall meet the following requirements:

DC leakage (at 125°C): Shall not exceed 125 percent of the applicable value specified (see 3.1).

DC leakage (at 25°C): Shall not exceed the applicable value specified (see 3.1).

Capacitance: Shall change not more than the percent specified (see 3.1) from the initial measured value (see 3.8).

Dissipation factor: Shall not exceed the applicable value specified (see 3.1).

Dielectric withstanding voltage (insulated capacitors only): Shall be as specified in 3.19.

Insulation resistance (insulated capacitors only): Shall be as specified in 3.20.

Visual examination: There shall be no damage, obliteration of marking, or leakage of electrolyte.

Downloaded from http://www.everyspec.com

3.28 Barometric pressure (reduced) (for qualification only). When tested as specified in 4.8.24, there shall be no flashover, breakdown, or harmful deformation of the case, and mechanical damage, obliteration of marking, or leakage of electrolyte.

3.29 Fungus. The manufacturer shall certify that all external materials are fungus resistant or shall perform the test specified in 4.8.25. When capacitors are tested as specified in 4.8.25, examination shall disclose no evidence of fungus growth on the surface of the capacitor.

3.30 Resistance to solvents. When capacitors are tested as specified in 4.8.26, marking shall remain legible and shall not smear or rub off. In addition, there shall be no visible indication of damage or deterioration to the capacitor body.

3.31 Resistance to soldering heat. When tested as specified in 4.8.27, capacitors shall meet the following requirements:

DC leakage: Shall not exceed the applicable value specified (see 3.1).

Capacitance: Shall change not more than the percent specified (see 3.1) from the initial measured value (see 3.8).

Dissipation factor: Shall not exceed the applicable value specified (see 3.1).

3.32 Marking. Marking of capacitors shall conform to method I of MIL-STD-1285 and shall include the Part or Identifying Number (PIN, "JAN" brand, trademark, CAGE code, date code, lot symbol, capacitance (in µF), and rated voltage. Capacitors shall be marked as shown in the following example.

Example:	M39006/	-	Military specification number.
	22-0001	-	Part or identification Number (PIN).
	JAN TM	-	“JAN” brand and trademark
	12345	-	CAGE code
	0415A	-	Date code and lot symbol
	15uF 15V	-	Capacitance and rated voltage. As an option, the rated voltage may be marked on a new line under the capacitance.

The manufacturer may mark the T1 thru T4 case size with high frequency vibration, "H" designated capacitors as follows:

Example:	M39006/	-	Military specification number.
	22H0001	-	Part or identification Number (PIN) with the “H” optional high frequency vibration.
	JAN TM	-	“JAN” brand and trademark
	12345	-	CAGE code
	0415A	-	Date code and lot symbol
	15uF 15V	-	Capacitance and rated voltage. As an option, the rated voltage may be marked on a new line under the capacitance.

OR

Downloaded from http://www.everyspec.com

The manufacturer may mark the T1 thru T4 case sizes with high frequency vibration, “H” designated capacitors as follows

Example:	M39006/	-	Military specification number.
	22-0001H	-	Part or identification Number (PIN).
	JAN TM	-	“JAN” brand and trademark
	12345	-	CAGE code
	0415A	-	Date code and lot symbol
	15uF 15V	-	Capacitance and rated voltage. As an option, the rated voltage may be marked on a new line under the capacitance.

Polarity: Series of plus (+) symbols encircling positive end (see figure 1 in the respective slash sheet).

3.32.1 JAN and J marking. The United States Government has adopted, and is exercising legitimate control over the certification marks "JAN" and "J", respectively, to indicate that items so marked or identified are manufactured to, and meet all the requirements of specifications. Accordingly, items acquired to and meeting all of the criteria specified herein and in applicable specification, shall bear the certification mark "JAN" except that items too small to bear the certification mark "JAN" shall bear the letter "J". The "JAN" or "J" shall be placed immediately before the part number except that if such location would place a hardship on the manufacturer in connection with such marking, the "JAN" or "J" may be located on the first line above or below the part number. Items furnished under contracts or orders which either permit or require deviation from the conditions or requirements specified herein and in applicable specifications shall not bear "JAN" or "J". In the event an item fails to meet the requirements of this specification and the applicable specification sheets or associated specifications, the manufacturer shall remove completely the military part number and the "JAN" or the "J" from the sample tested and also from all items represented by the sample. The "JAN" or "J" certification mark shall not be used on products acquired to contractor drawings or specifications. The United States Government has obtained Certificate of Registration Number 504,860 for the certification mark "JAN" and Registration Number 1,586,261 for the certification mark "J".

3.32.2 Substitutability of FRLs. A manufacturer may supply to those FRLs, as listed in table I, which are higher than to which they are qualified. Items of an exponential FRL as shown in table I and marked to lower FRL's, with acquiring agency approval, are substitutable for higher FRL's, and shall not be remarked unless specified in the contract or order (see 6.2), the lot date codes on the parts are unchanged, and the workmanship criteria is met.

TABLE I. Failure rate substitutability.

Parts qualified to FRL	Are substitutable for FRL
S	L, M, P, and R
R	L, M, and P
P	L and M
M	L

3.32.3 Substitutability of capacitance tolerance and rated voltages. Parts qualified and marked to tighter capacitance tolerance or higher rated voltage, with acquiring agency approval, are substitutable for parts marked to looser capacitance tolerance or lower rated voltage, provided all other values, such as case size, characteristic, and leads are the same. The substitutable parts shall not be remarked unless specified in the contract or order (see 6.2). In the event the capacitance tolerance or voltage rating is remarked, the lot date codes on the parts shall not be changed and the workmanship criteria shall be met.

Downloaded from http://www.everyspec.com

3.32.4 Non-ER marking. An ER part manufactured in accordance with this specification may be marked and furnished as the non-ER version of a similar part in MIL-DTL-3965, with acquiring agency approval, provided it is produced on the same assembly line or lines, and is subjected to and meets all of the inspection requirements of the ER part.

3.33 Recycled recovered or environmentally preferable materials. Recycled, recovered, or environmentally preferable materials should be used to the maximum extent possible provided that the material meets or exceeds the operational and maintenance requirements, and promotes economically advantageous life cycle costs.

3.34 Workmanship. Capacitors shall be processed in such a manner as to be uniform in quality when using 2X minimum to 4X maximum magnification. External leads shall not exhibit cuts, nicks, or scrapes exceeding 10 percent of the diameter for round and flat lead wire parts, except as follows:

Round leads: Within .050 inch (1.27 mm) beyond the weld area of the component, 10 percent of the surface area of the leads may exhibit bare base metal. These capacitors are not expected to be solderable within .050 inch (1.27 mm) beyond the weld area.

3.34.1 Terminals and end seals. All terminals and end seals shall be free of grease or other foreign material.

3.34.2 Insulating sleeving (when applicable). Insulating sleeving shall fit the container case in such a manner that there are no loose seams or ragged ends.

4. VERIFICATION

4.1 Classification of inspections. The inspection requirements specified herein are classified as follows:

a. Qualification inspection (see 4.4).

b. Verification of qualification (see 4.5).

c. Conformance inspection (see 4.6).

4.2 QPL system. The manufacturer shall establish and maintain a QPL system as described in 3.3. Evidence of such compliance is a prerequisite for qualification and retention of qualification.

4.3 Inspection conditions and methods.

4.3.1 Inspection conditions. Unless otherwise specified herein, all inspections shall be made in accordance with the test conditions specified in the "GENERAL REQUIREMENTS" of MIL-STD-202.

Downloaded from http://www.everyspec.com

4.3.2 Methods.

4.3.2.1 AC measurements. AC measurements shall be made at a frequency of 120 hertz (Hz) ±5 Hz. The magnitude of the ac voltage shall be equal to or less than 1.0 volt root mean squared (rms). Except as specified in the following, the dc bias voltage shall be 2.2 volts +0.0 volt, -1.0 volts for all ac measurements.

* a. 10.0 V dc +0.0 V dc, -1.0 V dc (100-volt, and 125-volt, capacitors, styles CLR93, CLR79, CLR81, CLR90, and CLR91 only).

b. At the option of the manufacturer, the dc bias voltage may be 2.2 V dc +0.0 V dc, -1.0 V dc or 10 percent of the rated voltage +0.0 V dc, -1.0 V dc, whichever is greater, for all styles.

The ratio of ac voltage to dc bias voltage shall be such that no reversal of dc voltage will occur across the capacitor.

4.3.2.2 Reference measurements. When requirements are based on comparative measurements made before and after conditioning, the reference measurement shall be considered the last measurement made at 25°C ±5°C prior to conditioning. Unless reference measurements have been made within 30 days prior to the beginning of conditioning, they shall be repeated.

4.3.3 Power supply. The power supply used for life testing shall have a regulation of ±2 percent or less of the specified test voltage. The power supply used for dc leakage current measurements shall be stabilized to at least ±100 ppm. No voltage fluctuations shall occur during measurements that would produce a variation in the current measurement.

4.4 Qualification inspection. Qualification inspection shall be performed at a laboratory acceptable to the Government (see 6.3), on sample units produced with equipment and procedures normally used in production. Qualification approval will be based on the successful completion of the tests specified in table II, and will not be withheld pending completion of the extended life test of 4.8.20.3.

4.4.1 Sample size. The number of capacitors to be subjected to qualification inspection shall be as specified in table A-I or in appendix A of this specification. Each capacitor style shall be qualified separately.

4.4.2 Inspection routine. The sample shall be subjected to the inspections specified in table II, in the order shown. Except as specified in table II, all sample units shall be subjected to the inspections of group I. For group II, two sample units shall be subjected to the visual and mechanical examination (internal) and the remaining sample units shall be subjected to the tests shown. These sample units shall then be divided as specified in table II for group III through group AI, and subjected to the inspections for their particular group.

4.4.3 Failures. Failures in excess of those allowed in table II shall be cause for refusal to grant qualification approval.

Downloaded from http://www.everyspec.com

TABLE II. Qualification inspection.

*

Examination or test	Requirement paragraph	Test paragraph	Number of failures allowed 1/		Number or failures allowed 1/
			CLR93 CLR79 CLR81 CLR90 CLR91	Other styles	
Group I					
Constant voltage conditioning	3.6	4.8.2	236	192	0
DC leakage	3.7	4.8.3			
Capacitance	3.8	4.8.4			
Dissipation factor	3.9	4.8.5			
Seal, condition A or D	3.1	4.8.6.1	---	---	---
Group II					
Visual and mechanical examination (internal)	3.1, 3.4, and 3.5	4.8.1	2	2	0
Visual and mechanical examination (external)	3.1, 3.4	4.8.1	2/ 234	3/ 190	1
Material	3.1, 3.5				
Interface requirements	3.5				
Marking 3/	3.32				
Workmanship	3.34				
Group III					
Shock (specified pulse)	3.11	4.8.7	5/ 24	12	6/ 1
Vibration, high frequency	3.12	4.8.8			
Random vibration 4/					
Thermal shock	3.26	4.8.22			
Salt atmosphere (corrosion)	3.13	4.8.9			
	3.14	4.8.10			

See footnotes at end of table.

Downloaded from http://www.everyspec.com

TABLE II. Qualification inspection – Continued.

*

Examination or test	Requirement paragraph	Test paragraph	Number of sample units to be inspected		Number of failures allowed 1/
			CLR93 CLR79 CLR81 CLR90 CLR91	Other styles	
Group IV					
Solderability (axial- wire lead styles)	3.15	4.8.11			
Terminal strength	3.16	4.8.12			
Surge voltage	3.17	4.8.13			
Moisture resistance	3.18	4.8.14			
Dielectric withstanding voltage (insulated styles)	3.19	4.8.15	12	12	1
Insulation resistance (insulated styles)	3.20	4.8.16			
Low temperature (storage)	3.21	4.8.17			
Seal, test condition C	3.10	4.8.6.2			
Group V					
Stability at low and high temperatures	3.22	4.8.18	12	12	
Reverse voltage (when specified, see 3.1)	3.23	4.8.19			
Group VI					
Life at 85°C (2,000 hour)	3.24.1	4.8.20.1	102	102	1
Group VII					
AC ripple life at 85°C (2,000 hours) (CLR93, CLR79, CLR81, CLR90, and CLR91)	3.25	4.8.21	7/ 32	---	1

See footnotes at end of table.

Downloaded from http://www.everyspec.com

TABLE II. Qualification inspection - Continued.

*

Examination or test	Requirement paragraph	Test paragraph	Number of sample units to be inspected		Number of failures allowed 1/
			CLR93 CLR79 CLR81 CLR90 CLR91	Other styles	
Group VIII					
Life at 125°C	3.27	4.8.23	40	40	1
Barometric pressure (reduced)	3.28	4.8.24			
Group IX					
Fungus 8/	3.29	4.8.25	5	5	0
Resistance to solvents	3.30	4.8.26	6	6	
Resistance to soldering heat	3.31	4.8.27			

1/ A sample unit having one or more defects shall be considered as a single failure.
2/ One additional sample unit is included in each sample size to permit substitution for the failure allowed in group II.
3/ Marking defects are based on visual examination only and shall be charged only for illegible, incomplete, or incorrect marking.
4/ CLR79, CLR81, CLR90, and CLR91 "H" designated units only.
5/ Twenty-four units, six of each case size.
6/ No failures for mechanical shock or vibration tests are permitted.
7/ Thirty-two units, eight of each case size.
8/ Certification of fungus resistance may be substituted for testing.

4.4.4 FRL and quality level verification.

4.4.4.1 FR qualification and lot conformance FR inspection. FR qualification and lot conformance FR inspection shall be in accordance with the general and detailed requirements of MIL-STD-690 and the following details:

a. Procedure I: Qualification at the initial FRL. Level M of FRSP-60 shall apply. On completion of the 2,000-hour qualification test (group VI, table II), the entire life test sample shall be continued on test as specified in 4.8.20.3.

b. Procedure II: Extension of qualification to lower FRL. To extend qualification to the R and S FRLs, data from two or more voltage groups within a style and of similar construction (see 4.6.1.1) may be combined. Life test data may be combined for those styles in each group listed in 4.6.1.1.

Downloaded from http://www.everyspec.com

c. Procedure III: Maintenance of FRL qualification. Maintenance period B of FRSP-10 shall apply. Regardless of the number of production lots produced during this period, the specified number of unit hours shall be accumulated to maintain qualification (see 4.5f). Life test data may be combined for those styles in each group listed in 4.6.1.1. Styles in group I and group V (see 4.6.1.1) may be combined for FRL maintenance of all levels.

d. Procedure IV: Lot conformance FR inspection. Lot conformance FR inspection shall be in accordance with 4.6.1.3.

4.4.4.2 Quality level verification. The manufacturer is responsible for establishing a quality system to assess the ppm defect level of lots. The ppm defect level shall be based on a 6-month moving average.

4.5 Verification of qualification. Every 6 months, the manufacturer shall provide verification of qualification to the qualifying activity. Continuation of qualification shall be based on meeting the following requirements:

a. MIL-STD-790 program.

b. The capacitor design has not been modified.

c. Lot rejection for group A inspection does not exceed 10 percent or one lot, whichever is greater.

d. Periodic group C inspection.

e. Verification of FRLs.

f. PPM assessment. Capacitor styles may be combined in accordance with each group listed in 4.6.1.1 for ppm calculations.

4.6 Conformance inspection.

4.6.1 Inspection of product for delivery. Inspection of product for delivery shall consist of group A inspection and subgroup 1 of group B inspection.

4.6.1.1 Inspection lot. An inspection lot, as far as practicable, shall consist of all capacitors from the same production line or lines, produced under essentially the same conditions and offered for inspection during a single work week. The following styles may be grouped:

a. Group II: Styles CLR65 and CLR69.

* b. Group IV: Styles CLR79, CLR81, CLR90, and CLR91.

* c. Group V. Style CLR93

4.6.1.2 Production lot. A production lot shall consist of all capacitors of the same style, voltage rating, nominal capacitance value, and termination finish. Manufacture of all parts in the lot shall have been started, processed, assembled, and tested as a group. Lot identity shall be maintained throughout the manufacturing cycle.

Downloaded from http://www.everyspec.com

4.6.1.3 Group A inspection. Group A inspection shall consist of the examinations and tests specified in table III, in the order shown.

4.6.1.3.1 Subgroup 1 tests. The subgroup 1 tests shall be performed on a production lot basis on 100 percent of the product supplied under this specification. Capacitors failing the tests of subgroup 1 shall be removed from the lot. If, during the 100 percent inspection, screening requires that more than 5 percent of the capacitors be discarded, the entire production lot shall be rejected.

TABLE III. Group A inspection.

Inspection	Requirement paragraph	Test paragraph	Sampling procedure
Subgroup 1			
Constant voltage conditioning	3.6	4.8.2	100% inspection
DC leakage	3.7	4.8.3	
Capacitance	3.8	4.8.4	
Dissipation factor	3.9	4.8.5	
Seal, condition A or D	3.10	4.8.6.1	
Subgroup 2 1/			
Mechanical examination (dimensions only)	3.5	4.8.1	See table IV
Subgroup 3			
Solderability	3.15	4.8.11	5 samples 0 failures
Subgroup 4			
Visual examination		4.8.1	13 samples 0 failures
Material	3.1, 3.4, 3.4.1	4.8.1	
Marking	3.32	4.8.1	
Workmanship	3.34	4.8.1	

1/ Not applicable for styles which are inactive for new design.

Downloaded from http://www.everyspec.com

TABLE IV. Sampling plan.

Lot size	Subgroup 2
1 - 13	100%
14 - 125	13
126 - 150	13
151 - 280	20
281 - 500	29
501 - 1,200	34
1,201 - 3,200	42
3,201 - 10,000	50
10,001 - 35,000	60
35,001 - 150,000	74
150,001 - 500,000	90
500,001 - Up	102

4.6.1.3.1.1 Manufacturer's production inspection. If the manufacturer performs tests equal to or more stringent than those specified in subgroup 1 of table III, as the final step of his production process, group A, subgroup 1 inspection may be waived. Authority to waive the subgroup 1 inspections shall be granted by the qualifying activity only. The following criteria shall be complied with:

a. Tests conducted by the manufacturer during production shall be clearly identical to or more stringent than those specified for subgroup 1. Test conditions shall be equal to or more stringent than those specified for subgroup 1 tests.

b. Manufacturer subjects 100 percent of the product supplied under this specification to his production tests.

c. The parameters measured and the failure criteria shall be the same as, or more stringent than, those specified herein.

d. The lot rejection criteria is the same as, or more stringent than, those specified herein.

e. Once approved, the manufacturer shall not change the test procedures or criteria without prior notification and concurrence by the qualifying activity.

4.6.1.3.2 Subgroup 2 tests.

4.6.1.3.2.1 Sampling plans. Subgroup 2 tests shall be performed on an inspection lot basis. Samples subjected to subgroup 2 shall be selected in accordance with table IV based on the size of the inspection lot. In the event of one or more failures the lot shall be rejected.

4.6.1.3.2.2 Rejected lots. The rejected lot shall be segregated from new lots and those lots that have passed inspection. The rejected lot shall be 100 percent inspected for those quality characteristics found defective in the sample and any defectives found removed from the lot. A new sample of parts shall then be randomly selected in accordance with table IV. If one or more defects are found in this second sample, the lot shall be rejected and shall not be supplied to the specification.

Downloaded from http://www.everyspec.com

4.6.1.3.3 Subgroup 3 (solderability).

4.6.1.3.3.1 Sampling plan. Five samples shall be selected randomly from each inspection lot and subjected to the solderability test. The manufacturer may use electrical rejects from the subgroup 1 screening tests for all or part of the samples to be used for solderability testing. If there are one or more defects, the lot shall be considered to have failed.

4.6.1.3.3.2 Rejected lots. In the event of one or more defects, the inspection lot shall be rejected. The manufacturer may rework the lot as follows: Each production lot that was used to form the failed inspection lot shall be individually submitted to the solderability test as required in 4.6.1.3.3.1. Production lots that pass the solderability test are available for shipment. Production lots failing the solderability test can be reworked only if submitted to the solder dip procedure in 3.5.2.1.

4.6.1.3.3.3 Disposition of samples. The solderability test is considered a destructive test, and samples submitted to the solderability test shall not be supplied on the contract.

4.6.1.3.4 Subgroup 4. Subgroup 4 shall be performed on an inspection basis. Sampling inspection shall be in accordance with table III.

4.6.1.3.4.1 Rejected lots. The rejected lot shall be segregated from new lots and those lots that have passed inspection. Lots rejected because of failures in subgroup 4 may be offered for acceptance only if the manufacturer inspects all units in the lot for those quality characteristics found defective in the sample and, after removing all defective units found, reinspects the lot using the sampling procedure specified in table III. If one or more defects are found in the second sample, the lot shall be rejected and shall not be supplied to this specification. Resubmitted lots shall be kept separate from new lots, and shall be identified as resubmitted lots.

4.6.1.3.5 PPM calculations. The manufacturer shall establish a ppm system in accordance with 3.3.2 for assessing and calculating average outgoing quality of capacitors. A ppm rate combining DC leakage, capacitance, and dissipation factor, shall be assessed for lots that have passed the group A inspection. The manufacturers ppm system shall also address rectification procedures for lots failing ppm assessment. Data from the rectification process shall not be used to calculate ppm.

4.6.1.4 Group B inspection. Group B inspection for all FRLs shall consist of the tests specified in table V, in the order shown, and shall be performed on sample units which have been subjected to and have passed the applicable tests of group A inspection.

4.6.1.4.1 Sampling plan. For subgroup 1, 13 sample units shall be selected at random from each inspection lot. For subgroup 2, a minimum of 10 sample units shall be selected at random from each inspection lot and shall be inspected as specified. (NOTE: The manufacturer has the option of using 10 sample units from the subgroup 1 tests for subgroup 2 testing.) Units selected for subgroup 2 may be subjected to specified test before 1 month has elapsed.

Downloaded from http://www.everyspec.com

TABLE V. Group B inspection.

Test	Requirement paragraph	Test paragraph	Sampling procedure
Subgroup 1 Stability at low and high temperatures 1/	3.22	4.8.18	13 samples 0 failures
Subgroup 2 Thermal shock Life (10,000-hour at 85°C) 2/	3.13 3.24.2	4.8.9 4.8.20.2	10 samples 3/

1/ For styles CLR93, CLR79, CLR81, CLR90, and CLR91 only. If the manufacturer can demonstrate that this test has been performed five consecutive times with zero failures, the frequency of this test, with the approval of the qualifying activity, can be performed on an annual basis. If the design, material, construction or processing of the part is changed, or if there are any quality problems or failures, the qualifying activity may require resumption of the original test frequency.
2/ Unit hours generated shall be used for FRL computation.
3/ No failures allowed for thermal shock test. Life test failures in accordance with MIL-STD-690.

4.6.1.4.2 Disposition of sample units. Sample units, which have been subjected to group B, subgroup 2 inspection shall not be delivered on the contract.

4.6.1.4.3 Failure in group B inspection.

4.6.1.4.3.1 Subgroup 1. If an inspection lot is rejected as a result of failure to pass the subgroup 1 inspection, the individual production lot, or lots, which produced the failures shall be identified and kept separate from other lots, and shall be subjected to 100 percent inspection for those characteristics found defective.

4.6.1.4.3.2 Subgroup 2. A failure in subgroup 2 shall be considered as a noncompliance in accordance with 4.7.4.

4.7 Periodic group C inspection. Group C inspection shall be performed on sample units which have been subjected to and have passed the applicable tests for group A inspection and shall consist of the tests specified in table VI, in the order shown. Delivery of products which have passed group A and group B inspection shall not be delayed pending the results of periodic inspection.

Downloaded from http://www.everyspec.com

TABLE VI. Group C inspection.

*

Test	Requirement paragraph	Test paragraph	Number of sample units to be inspected	Number of failures allowed 1/
Subgroup 1 (every 2 months)				
Seal, condition C	3.10	4.8.6.2	12	
Shock (specified pulse)	3.11	4.8.7		
Vibration, high frequency	3.12	4.8.8		
Random vibration 2/	3.26	4.8.22		
Subgroup 2 (every 2 months)				
Terminal strength 3/	3.16	4.8.12	12	1
Surge voltage 3/	3.17	4.8.13		
Moisture resistance 3/	3.18	4.8.14		
Dielectric withstanding voltage (insulated styles) 3/	3.19	4.8.15		
Insulation resistance (insulated styles) 3/	3.20	4.8.16		
Subgroup 3 (every 2 months)				
Reverse voltage (when specified, see 3.1) 3/	3.23	4.8.19	12	
Subgroup 4 (CLR93, CLR79, CLR81, CLR90, and CLR91 only) (every 12 months)				
AC ripple life at 85°C	3.25	4.8.21	4/ 32	1
Subgroup 5 (every 2 months)				
Low temperature (storage) 5/	3.21	4.8.17	12	1
Subgroup 6 (every 12 months)				
Resistance to solvents 5/	3.30	4.8.26	6	1
Resistance to soldering heat 5/	3.31	4.8.27		
Subgroup 7 (CLR93, CLR79, CLR81, CLR90, and CLR91 only) (every 12 months)				
Thermal shock	3.13	4.8.9	6/ 24	1
Subgroup 8 (every month) 7/				
Thermal shock	3.13	4.8.9	10	0
Life (2,000-hour at 125°C)	3.27.1	4.8.23.1		1

See footnotes at top of next page.

Downloaded from http://www.everyspec.com

TABLE VI. Group C inspection - Continued.

1/ A sample having one or more defects shall be considered as a single failure.
2/ CLR79, CLR81, CLR90, and CLR91 "H" designated units only.
3/ If the manufacturer can demonstrate that this test has been performed five consecutive times with zero failures, the frequency of this test, with the approval of the qualifying activity, can be performed on an annual basis. If the design, material, construction or processing of the part is changed, or if there are any quality problems or failures, the qualifying activity may require resumption of the original test frequency.
4/ Thirty-two units, eight of each case size.
5/ If the manufacturer can demonstrate that this test has been performed five consecutive times with zero failures, this test, with the approval of the qualifying activity, can be deleted. The manufacturer, however, shall perform this test every three years after the deletion as part of long term design verification. If the design, material, construction or processing of the part is changed, or if there are any quality problems, the qualifying activity may require resumption of the specified testing. Deletion of testing does not relieve the manufacturer from meeting the test requirements in case of dispute.
6/ Twenty-four units, six of each case size.
7/ Of the 10 sample units, no failures allowed for thermal shock, and only 1 allowed for life 2000-hour at 125°C.

4.7.1 Sampling plan. Sample units shall be taken from production every 2 months for subgroup 1, subgroup 2, subgroup 3, and subgroup 5; every 12 months for subgroup 4, subgroup 6, and subgroup 7; and every month for subgroup 8. Styles shall be combined in accordance with the groups listed in 4.6.1.1. The voltages selected shall be represented in the sample in the same proportion as the voltages produced during the sampling period. The maximum and minimum case sizes manufactured during those months shall be represented in at least the approximate ratio of production, except for subgroup 1. The sample for subgroup 1 shall be composed of a minimum of three pieces of any one case size, and all case sizes produced in a 12-month period shall receive subgroup 1 testing at least once during that 12-month period. Allowable failures shall be as specified in table VI.

4.7.2 Failures. If the number of failures exceeds the number allowed in table VI, the sample shall be considered to have failed.

4.7.3 Disposition of sample units. Sample units, which have been subjected to group C inspection, shall not be delivered on the contract order.

4.7.4 Noncompliance. If a sample fails to pass group C inspection, the manufacturer shall notify the qualifying activity and cognizant inspection activity of such failure and take corrective action on the materials or processes, or both as warranted, and on all units of product which can be corrected and which are manufactured with essentially the same materials and under the same processes, and which are considered subject to the same failure. Acceptance and shipment of the product shall be discontinued until corrective action acceptable to the qualifying activity has been taken. After the corrective action has been taken, group C inspection shall be repeated on additional sample units (all inspections, or the inspection which the original sample failed, at the option of the qualifying activity). Group A and group B inspections may be reinstituted; however, final acceptance and shipment shall be withheld until the group C inspection has shown that the corrective action was successful.

Downloaded from http://www.everyspec.com

4.8 Method of inspection.

4.8.1 Visual and mechanical examination. Capacitors shall be examined to verify that the materials, design, construction, physical dimensions, marking, and workmanship are in accordance with the applicable requirements (see 3.1, 3.4, 3.5, 3.32, and 3.34).

CAUTION: Care should be used in opening and handling these capacitors during the internal examination, since some of the electrolytes used are dangerous and may cause harm to person or property (equipment).

4.8.2 Constant voltage conditioning (see 3.6). Capacitors shall be conditioned at 85°C, +6°C, -0°C with the applicable rated voltage applied through a 1,100 ohm (maximum) resistor for a period of 48 hours minimum. Capacitors shall be returned to room ambient temperature and shall then be visually examined for mechanical damage and leakage of electrolyte.

NOTE: For non-polarized capacitors, the conditioning voltage shall be reversed periodically so that the time of application of applicable voltage in both directions is approximately equal.

4.8.3 DC leakage (see 3.7). DC leakage shall be measured with the dc rated voltage applied. The electrification period shall be as follows:

a. For qualification inspection: Five ± one-half minutes.

b. For conformance inspection: Within 5 minutes.

For nonpolarized capacitors, measurements shall be made in both directions.

NOTE: DC leakage shall always be the first measurement when dc leakage, capacitance, and dissipation factor measurements are made concurrently.

4.8.4 Capacitance (see 3.8). Capacitors shall be tested in accordance with method 305 of MIL-STD-202. The following details shall apply:

a. Test frequency: As specified in 4.3.2.1.

b. Limit of accuracy: Within ±2 percent.

c. Magnitude of polarizing voltage: As specified in 4.3.2.1.

4.8.5 Dissipation factor (see 3.9). The dissipation factor shall be determined by a polarized bridge. Measurement accuracy shall be within ±2 percent. The test frequency and the magnitude of polarizing voltage shall be as specified in 4.3.2.1.

4.8.6 Seal (see 3.10). Capacitors shall be tested in accordance with method 112 of MIL-STD-202. When applicable, this test may be performed prior to the addition of the sleeving.

4.8.6.1 Test condition A or D. Capacitors shall be tested in accordance with test condition A or condition D. No measurement is required after testing.

Downloaded from http://www.everyspec.com

4.8.6.2 Test condition C. Capacitors shall be tested in accordance with test condition C. The following details shall apply:

a. Procedure number and degree of leakage rate sensitivity: Procedure III, 10^{-8} atm cc/s. On completion of this procedure, test condition A shall be used for checking gross leak.

b. Measurements after test: Not applicable.

Following this test, capacitors shall be visually examined for evidence of leakage.

4.8.7 Shock (specified pulse) (see 3.11). Capacitors shall be tested in accordance with method 213 of MIL-STD-202. The following details and exceptions shall apply:

a. Special mounting means: Capacitors with axial-wire lead terminals shall be rigidly mounted on a mounting fixture by the body with their terminals secured to rigidly supported stud-terminals, so spaced that the length of each terminal from the capacitor is approximately .375 inch (9.52 mm) when measured from the edge of the supporting stud-terminal. Capacitor terminals shall be within 30 degrees of being parallel. When securing capacitor terminals, care shall be taken to avoid pinching the capacitor terminals.

b. Test condition letter: I (100 g's), or D (500 g's) for CLR79, CLR81, CLR90, and CLR91 "H" designated units.

c. Measurement and electrical loading during shock: DC rated voltage shall be applied to the capacitor during the test. Observations shall be made to determine intermittent contacts or arcing, or open-circuiting or short-circuiting. Detecting equipment shall be sufficiently sensitive to detect any interruption of 0.5 ms or greater duration.

4.8.8 Vibration, high frequency (see 3.12). Capacitors shall be tested in accordance with method 204 of MIL-STD-202. The following details and exceptions shall apply:

a. Mounting of specimens: The body of the capacitor shall be rigidly mounted to the vibration test apparatus.

b. Test condition letter: D (20 g's), as specified (see 3.1) or H (80 g's) for CLR79, CLR81, CLR90, and CLR91 "H" designated units. The motion shall be applied for a total of 8 hours (4 hours in each of two mutually perpendicular directions, one parallel to and the other perpendicular to the cylindrical axis).

c. Measurements: During the last 30 minutes of vibration in each direction, an electrical measurement shall be made on the capacitors to determine intermittent contacts or open-circuiting or short-circuiting. Detecting equipment shall be sufficiently sensitive to detect any interruption of 0.5 ms or greater duration. Capacitors shall be returned to the inspection conditions specified in 4.3.1, and the dc leakage, capacitance, and dissipation factor shall be measured as specified in 4.8.3, 4.8.4, and 4.8.5, respectively.

d. Examination after test: Capacitors shall be visually examined for evidence of arcing, breakdown, mechanical damage and leakage of electrolyte.

Downloaded from http://www.everyspec.com

4.8.9 Thermal shock (see 3.13). Capacitors shall be tested in accordance with method 107 of MIL-STD-202. The following details and exceptions shall apply:

a. Conditioning prior to first cycle: 15 minutes at room ambient conditions (see 4.3.1).

b. Test condition letter: A, except step 3 shall be +125°C +7°C, -0°C.

c. Number of cycles: Thirty. CLR93, CLR79, CLR81, CLR90, and CLR91 only: 300 cycles for qualification and group C, subgroup 7; 30 cycles for group B and group C, subgroup 8.

d. Measurements before cycling: Not applicable.

e. Measurements after cycling: DC leakage, capacitance, and dissipation factor shall be measured as specified in 4.8.3, 4.8.4, and 4.8.5, respectively. In addition, capacitors shall be externally examined for leakage of electrolyte. Detection of leakage of electrolyte shall be determined by the use of Thymol blue, or other suitable chemical indicator solution.

4.8.10 Salt atmosphere (corrosion) (for qualification only) (see 3.14). Capacitors shall be tested in accordance with method 101 of MIL-STD-202. The following details and exceptions shall apply:

a. Applicable salt solution: Five percent.

b. Test condition letter: B (48 hours).

c. Measurements after tests: Not applicable.

d. Examination after tests: After the test, the capacitors shall be washed and then air-dried for 24 hours. The capacitors shall then be examined for evidence of harmful corrosion, loss of plating, unwrapping of or mechanical damage to the insulating sleeving (when applicable), and legibility of marking.

4.8.11 Solderability (capacitors with axial-wire lead terminals only, see 3.1) (see 3.15). Capacitors shall be tested in accordance with method 208 of MIL-STD-202. The following details shall apply:

a. Number of terminations of each part to be tested: Two.

b. Depth of immersion: Terminals shall be immersed up to .062 inch (1.57 mm) of the welded joint or up to .156 inch (3.96 mm) of the body, whichever applies.

4.8.12 Terminal strength (see 3.16). All capacitors shall be tested in accordance with 4.8.12.1 and the capacitors with solder-lug terminals, which show visible bending during the pull test, shall be tested in accordance with 4.8.12.2; capacitors with axial-wire lead terminals shall be tested in accordance with 4.8.12.3. After the tests, the terminals, terminal weld or solder, and seals shall be examined for loosening or permanent damage.

Downloaded from http://www.everyspec.com

4.8.12.1 Pull test. Capacitors shall be tested in accordance with method 211 of MIL-STD-202. The following details and exception shall apply:

a. Test condition letter: A.

b. Applied force: Three pounds +2 ounces, -0 ounces (1.4 kg +0.1 kg, -0 kg) for capacitors with axial terminals and 5 pounds +3 ounces, -0 ounces (2.3 kg +0.1 kg, -0 kg) for capacitors with solder-lug terminals.

c. Duration of applied force: 30 seconds +5 seconds, -0 seconds.

4.8.12.2 Bend test. Capacitors shall be tested in accordance with method 211 of MIL-STD-202. The following detail and exception shall apply:

a. Test condition letter: B.

b. Number of bends: Four.

4.8.12.3 Wire-lead bend test. The terminal shall be inserted into the hole of the test block fixture and the wingnut shall be tightened (see figure 1). There shall be a minimum of .188 inch (4.78 mm) but not more than .313 inch (7.95 mm) of terminal length between the test block fixture and the end of the case (for terminals with welds more than .188 inch (4.78 mm) from the end of the case, the bottom of the weld shall be flush with the test block fixture). With the fixture firmly supported in a horizontal position, the case shall be forced over in such a manner that the terminal (from the end of the fixture case) is maintained in its axial position as closely as practicable while bending the terminal until the end of the case touches the top surface of the fixture. When the case is returned to the starting position, one complete bend of the test will have been completed. The second bend shall be completed in the same manner as the first except that it shall be in the reverse direction. Succeeding bends shall alternate in direction similar to the first and second bends. All terminals shall be subjected to four bends. The rate of bend shall be approximately 5 seconds per bend.

Downloaded from http://www.everyspec.com

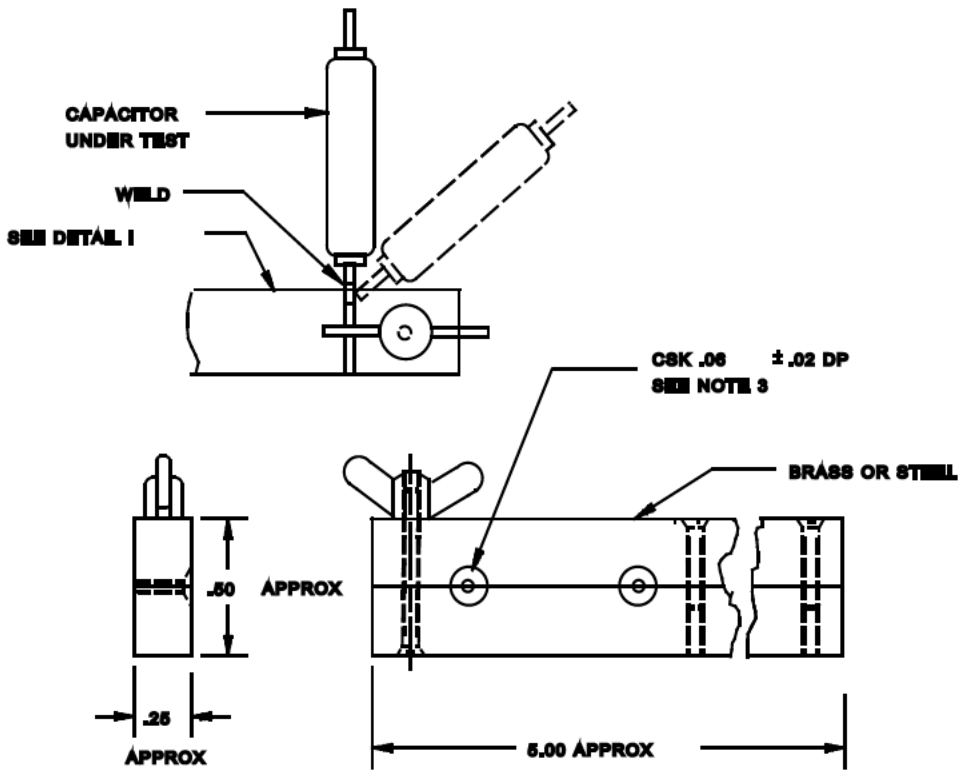

Inches	mm
.001	0.03
.02	0.5
.06	1.5
.25	6.4
.50	12.7
5.00	127.0

NOTES:
1. Dimensions are in inches.
2. Metric equivalents are given for general information only.
3. The diameter of the hole shall be .001 inch less than the diameter of the lead wire (see 3.1).

FIGURE 1. Test block fixture for wire-lead bend test.

Downloaded from http://www.everyspec.com

4.8.13 Surge voltage (see 3.17). Capacitors shall be subjected to 1,000 cycles of the applicable dc surge voltage specified (see 3.1). The ambient temperature during cycling shall be 85°C, +6°C, -0°C. Each cycle shall consist of a 30 +2, -0 second surge voltage application followed by a 5.5 minute +.5, -0, minute discharge period. Voltage application shall be made through a resistance of 1,000 ±100 ohms in series with the capacitor. Each surge voltage cycle shall be performed in such a manner that the capacitor is discharged through the 1,000-ohm resistor at the end of the 30-second application. The test shall be terminated on the discharge portion of the cycle.

a. Initial measurements: Capacitance shall be measured as specified in 4.8.4.

b. Measurements after test: After the final cycle, the capacitors shall be stabilized at the inspection conditions specified in 4.3 and the dc leakage, capacitance, and dissipation factor shall be measured as specified in 4.8.3, 4.8.4 and 4.8.5 respectively.

c. Examination after test: Capacitors shall be visually examined for mechanical damage and leakage of electrolyte.

4.8.14 Moisture resistance (see 3.18). Capacitors shall be tested in accordance with method 106 of MIL-STD-202. The following details and exceptions shall apply:

a. Mounting: Except during examination and measurements, capacitors shall be securely fastened by normal mounting means.

b. Polarization and loading voltages: 6 V dc.

c. Step 7b: Vibration is not required during step 7b.

d. Final measurements: After the final cycle and within 2 hours to 6 hours after removal of the capacitors from the humidity chamber, the dc leakage, capacitance, and dissipation factor shall be measured as specified in 4.8.3, 4.8.4, and 4.8.5, respectively, at the inspection conditions specified in 4.3.1.

e. Examination after test: Capacitors shall be visually examined for evidence of harmful corrosion, mechanical damage, obliteration of marking, and leakage of electrolyte.

4.8.15 Dielectric withstanding voltage (insulated capacitors only, see 3.1) (see 3.19). Capacitors shall be tested in accordance with method 301 of MIL-STD-202. The following detail and exceptions shall apply:

a. Magnitude and nature of test voltage: 2,000 V dc.

b. Points of application of test voltage: Between the capacitor case and a fixture which will provide intimate contact with 70 percent to 80 percent of the capacitor body length, with the fixture (foil or otherwise) centered on the body length.

c. Examination after test: Sleeving shall be examined for evidence of breakdown.

Downloaded from http://www.everyspec.com

4.8.16 Insulation resistance (insulated capacitors only, see 3.1) (see 3.20). Capacitors shall be tested in accordance with method 302 of MIL-STD-202. The following details and exception shall apply:

a. Test condition letter: B (500 V dc ±10 percent).

b. Points of measurement: Between the capacitor case and a V-block in intimate contact with the sleeving.

c. Electrification time: 1 minute +0 second, -15 seconds.

4.8.17 Low temperature (storage) (see 3.21). Capacitors shall be tested in accordance with method 502 of MIL-STD-810. The following details and exceptions shall apply:

a. Storage temperature: -62°C +0°C, -3°C.

b. Exposure time: 72 hours followed by a 1-hour exposure at +125°C +7°C, -0°C within 24 hours after low temperature storage.

c. Measurements after exposure: Capacitors shall be returned to inspection conditions specified in 4.3.1 and, within 24 hours after exposure, dc leakage, capacitance, and dissipation factor shall be measured as specified in 4.8.3, 4.8.4, and 4.8.5, respectively.

d. Examination after test: Capacitors shall be externally examined for leakage of electrolyte. Detection of leakage of electrolyte shall be determined by the use of Thymol blue, or other suitable chemical-indicator solution.

4.8.18 Stability at low and high temperatures (see 3.22). The measurements specified in table VII shall be made in the order shown. The capacitors shall be brought to thermal stability. Thermal stability will have been reached when no further change in capacitance is observed between two successive measurements taken at 15-minute intervals.

TABLE VII. Temperatures and measurements for stability at low and high temperatures tests.

Step	Temperature	Measurement	Test paragraph
1	+25°C	DC leakage Capacitance Dissipation factor	4.8.3 4.8.4 4.8.5
2	-55°C +0°C, -3°C	Impedance Capacitance	4.8.18.1 4.8.4
3	+25°C	DC leakage Capacitance Dissipation factor	4.8.3 4.8.4 4.8.5
4	+85°C +6°C, -0°C	DC leakage Capacitance Dissipation factor	4.8.3 4.8.4 4.8.5
5	+125°C +7°C, -0°C	DC leakage 1/ Capacitance Dissipation factor	4.8.3 4.8.4 4.8.5
6	+25°C	DC leakage Capacitance Dissipation factor	4.8.3 4.8.4 4.8.5

1/ During the measurement, de-rated voltage (see 3.1) shall be applied.

Downloaded from http://www.everyspec.com

4.8.18.1 Impedance. The capacitor shall be conditioned at -55°C +0°C, -3°C for a period of not less than 30 minutes or until stable measurements can be obtained. The impedance shall then be measured directly or determined from measurements obtained on a bridge. Measurements shall be made at 120 Hz ±5 Hz. Measurement accuracy shall be within ±5 percent.

4.8.19 Reverse voltage (when specified, see 3.1) (see 3.23). Capacitors shall be subjected to a dc potential of 3 volts, applied in the reverse polarity direction, for 125 hours ±10 hours. The ambient temperature during the test shall be 85°C, +6°C, -0°C. Capacitors shall be maintained at 85°C, +6°C, -0°C and dc rated voltage shall be applied in the forward polarity direction for an additional period of 125 hours ±10 hours. Capacitors shall then be returned to room ambient temperature and the dc leakage, capacitance, and dissipation factor shall be measured as specified in 4.8.3, 4.8.4, and 4.8.5, respectively.

4.8.20 Life at 85°C (see 3.24).

4.8.20.1 2.000-hour (qualification inspection) (see 3.24.1). Capacitors shall be tested in accordance with method 108 of MIL-STD-202. The following details and exceptions shall apply:

a. Distance of temperature measurements from specimens, in inches: Not applicable.

b. Test temperature and tolerance: 85°C +6°C, -0°C.

c. Operating conditions: DC rated voltage (see 3.1) shall be applied gradually (not to exceed 5 minutes either by a slow build-up of the voltage or through a resistor which shall be shorted out within 5 minutes). Voltage shall be applied continuously except for measurement periods. The impedance of the voltage source, as seen from the terminals of each capacitor, shall not exceed 10 ohms. Storage batteries, or an electronic power supply capable of supplying at least 100 milliamperes (mA) when a capacitor is shorted out, shall be used. For nonpolarized capacitors, the voltage shall be reversed every 125 hours ±10 hours.

d. Test condition letter: F (2,000 hours +96 hours, -0 hour).

e. Measurements after exposure (at 85°C): DC leakage shall be measured as specified in 4.8.3 during the first hour of exposure and then at 240 hours +72 hours, -24 hours; 1,000 hours +72 hours, -24 hours; and 2,000 hours +96 hours, -0 hour.

f. Measurements after exposure: Capacitors shall be returned to the inspection conditions specified in 4.3.1, and dc leakage, capacitance, and dissipation factor shall be measured as specified in 4.8.3, 4.8.4, and 4.8.5, respectively.

g. Examination after test: Capacitors shall be visually examined for damage, obliteration of marking, and leakage of electrolyte.

h. The capacitors shall then be continued on life test in accordance with 4.8.20.3.

Downloaded from http://www.everyspec.com

4.8.20.2 10,000-hour (group B inspection) (see 3.24.2). Except as specified in the following, capacitors shall be tested in accordance with 4.8.20.1:

a. Test duration: 10,000 hours +120 hours, -0 hour.

b. Measurements during exposure: DC leakage shall be measured during the first hour of exposure and then at 240 hours +72 hours, -24 hours; 2,000 hours +96 hours, -24 hours; and every 2,000 hours +96 hours, -24 hours thereafter until 10,000 hours +120 hours, -0 hours have elapsed. At the completion of 6,000 hours +96, -24 hours, capacitors shall be returned to the inspection conditions specified in 4.3.1, and dc leakage, capacitance, and dissipation factor shall be measured as specified in 4.8.3, 4.8.4, and 4.8.5, respectively.

c. Measurements after exposure: In addition to the measurements specified in 4.8.20.1g, the dielectric withstanding voltage and insulation resistance shall be measured on insulated capacitors as specified in 4.8.15 and 4.8.16, respectively. Failures in the dielectric withstanding voltage test and the insulation resistance test and the visual examinations following the life test shall not be counted against the declared C number as a failure for MIL-STD-690 calculation of failure rate. Failures for dielectric withstanding voltage or insulation resistance shall be investigated, identified, and satisfactory corrective actions offered to the qualifying activity for approval.

4.8.20.3 Extended life (following 2,000-hour qualification inspection) (see 3.24.2). Sample units, which have been subjected to 2,000 hours of life test as specified in 4.8.20.1, shall remain on test for an additional 8,000 hours +96 hours, -0 hours. DC leakage shall be measured during exposure after every 2,000 hours +96 hours -24 hours, until 10,000 hours +120 hours -0 hours, have elapsed. After completion of the 10,000-hour life test time, the dielectric withstanding voltage and insulation resistance shall be measured on insulated capacitors as specified in 4.8.15 and 4.8.16, respectively.

* 4.8.21 AC ripple life at 85°C (CLR93, CLR79, CLR81, CLR90, and CLR91 only) (see 3.25). Capacitors shall be tested in accordance with method 108 of MIL-STD-202. The following details and exceptions shall apply:

a. Distance of temperature measurements from specimens, in inches: Not applicable.

b. Method of mounting: Capacitors shall be mounted by normal mounting means.

c. Test temperature: 85°C +6°C, -0°C.

d. Operating conditions: DC voltage (see 3.1) shall be applied gradually (not to exceed 5 minutes either by a slow buildup of the voltage or through a resistor which shall be shorted out within 5 minutes). The rated ripple current at 40 kHz +2 kHz (see 3.1) shall also be applied. The impedance of the voltage source, as seen from the terminals of each capacitor, shall not exceed 10 ohms. Storage batteries, or an electronic power supply capable of supplying at least 100 mA when a capacitor is shorted out, shall be used.

e. Test condition letter: F (2,000 hours +72 hours, -0 hour).

f. Measurements before and after exposure: DC leakage, capacitance, and dissipation factor shall be measured as specified in 4.8.3, 4.8.4, and 4.8.5, respectively.

Downloaded from http://www.everyspec.com

g. Examination after test: Capacitors shall be visually examined for damage, obliteration of marking, and leakage of electrolyte.

4.8.22 Random vibration (CLR79, CLR81, CLR90, and CLR91 "H" designated units only) (see 3.26). Capacitors shall be tested in accordance with method 214 of MIL-STD-202. The following details and exceptions shall apply:

a. Mounting of specimens: The body of the capacitor shall be rigidly mounted to the vibration test apparatus.

b. Test condition, styles CLR79, CLR81, CLR90, and CLR91 "H" designated units: II-K. The test shall be conducted for one and one-half hours in each of three mutually perpendicular directions.

c. Measurements: During the last 30 minutes of vibration in each direction, an electrical measurement shall be made on the capacitors to determine intermittent open-circuiting or short-circuiting. Detecting equipment shall be sufficiently sensitive to detect any interruption of 0.5 ms or greater duration. Capacitors shall be returned to the inspection conditions specified in 4.3.1, and the dc leakage, capacitance, and dissipation factor shall be measured as specified in 4.8.3, 4.8.4, and 4.8.5, respectively.

d. Examination after test: Capacitors shall be visually examined for harmful corrosion, mechanical damage, obliteration of marking, and leakage of electrolyte.

4.8.23 Life at 125°C (see 3.27). Except as specified in the following, capacitors shall be tested in accordance with 4.8.20.1:

a. Test temperature and tolerance: 125°C +7°C, -0°C.

b. Operating conditions: Derated voltage (see 3.1) shall be applied.

c. Measurements after exposure: In addition to the measurements specified in 4.8.20.1g, the dielectric withstanding voltage and insulation resistance shall be measured on insulated capacitors as specified in 4.8.15 and 4.8.16, respectively.

4.8.23.1 2,000-hour (group C inspection) (see 3.27.1). Except as specified in the following, capacitors shall be tested in accordance with 4.8.23:

a. Test duration: 2,000 hours +96 hours, -0 hours.

b. Operating conditions: Derated voltage (see 3.1) shall be applied.

c. Measurements during exposure: DC leakage shall be measured at 125°C, +7°C, -0°C during the first hour of exposure and then at 240 hours +72 hours, -24 hours; 1,000 hours +72 hours, -24 hours; and 2,000 hours +96 hours, -0 hours.

d. Measurements after exposure: DC leakage, capacitance, dissipation factor, dielectric withstanding voltage (insulated capacitors only), and insulation resistance (insulated capacitors only) shall be measured at 25°C, as specified in 4.8.3, 4.8.4, 4.8.5, 4.8.15, and 4.8.16, respectively.

Downloaded from http://www.everyspec.com

4.8.24 Barometric pressure (reduced) (for qualification only) (see 3.28). Capacitors shall be tested in accordance with method 105 of MIL-STD-202. The following details shall apply:

a. Method of mounting: By normal mounting means.

b. Test condition letter: E (150,000 feet) (45,720 m).

c. Test during subjection to reduced pressure: At the end of the conditioning period and with the capacitors still at reduced pressure, the specified voltage (see 3.1) shall be applied for 1 minute ±5 seconds.

d. Test after subjection to reduced pressure: Capacitors shall be visually examined for harmful deformation of the case, mechanical damage, obliteration of marking, leakage of electrolyte, and indications of flashover and breakdown.

e. Exposure time prior to examination: 5 minutes (minimum).

4.8.25 Fungus (see 3.29). Capacitors shall be tested in accordance with method 508 of MIL-STD-810. Pretest and post-test measurements are not required.

4.8.26 Resistance to solvents (see 3.30). Capacitors shall be tested in accordance with method 215 of MIL-STD-202. The following details shall apply:

a. Portion of specimen to be brushed: That portion on which marking is present.

b. Number of specimens to be tested: As specified in applicable inspection tables.

c. Permissible extent of damage: As specified in 3.30.

4.8.27 Resistance to soldering heat (see 3.31). Capacitors shall be tested in accordance with method 210 of MIL-STD-202. The following details and exceptions shall apply:

* a. Special preparation of the specimen: Both leads shall be dipped in flux for 5 seconds ±0.5 seconds and then dipped into solder for 5 seconds ±0.5 seconds. The bath shall be maintained at 260°C ± 5°C. The parts shall be immersed to within .050 inch (1.27 mm) beyond the weld area.

b. Test condition: C: With the following exceptions; A board with a maximum area of nine square inches shall be used, and the leads shall not be cut.

c. Measurements after test: After completion of the cleaning process and following a minimum 3-hour cooling period, the dc leakage, capacitance, and dissipation factor shall be measured as specified in 4.8.3, 4.8.4, and 4.8.5, respectively.

d. Examination after test: Capacitors shall be examined for evidence of mechanical damage.

Downloaded from http://www.everyspec.com

5. PACKAGING

5.1 Packaging. For acquisition purposes, the packaging requirements shall be as specified in the contract or order (see 6.2). When packaging of materiel is to be performed by DoD or in-house contractor personnel, these personnel need to contact the responsible packaging activity to ascertain packaging requirements. Packaging requirements are maintained by the Inventory Control Point's packaging activities within the Military Service or Defense Agency, or within the military service's system commands. Packaging data retrieval is available from the managing Military Department or Defense Agency's automated packaging files, CD-ROM products, or by contacting the responsible packaging activity.

6. NOTES

(This section contains information of a general or explanatory nature that may be helpful, but is not mandatory.)

6.1 Intended use. These capacitors covered by this specification are military unique due to the fact that these devices must be able to operate satisfactorily in military systems under the following demanding conditions including: -55°C to +125°C operating temperature range, 54 G's rms of vibration, up to 500 G's of shock, 48 hours of salt spray, 1,000 cycles of surge voltage, up to 300 cycles of thermal shock. This specification also has a military unique established reliability failure rate system. In addition these military requirements are verified under a qualification system. Commercial components are not designed to withstand these military environmental conditions.

6.2 Acquisition requirements. Acquisition documents must specify the following:

a. Title, number, and date of this specification, the applicable specification sheet, and the complete Part or Identifying Number (PIN) (see 1.2.1 and 3.1)

b. Packaging requirements (see 5.1).

c. If remarking of parts is required to indicate FRL (see 3.32.3).

6.3 Qualification. With respect to products requiring qualification, awards will be made only for products that are, at the time of award of contract, qualified for inclusion in QPL whether or not such products have actually been so listed by that date. The attention of the contractors is called to these requirements, and manufacturers are urged to arrange to have the products that they propose to offer to the Federal Government tested for qualification in order that they may be eligible to be awarded contracts or orders for the products covered by this specification. The activity responsible for the QPL is the U.S. Army Communications-Electronics Command, ATTN: AMSEL-LC-LEO-E-EP, Fort Monmouth, NJ 07703-5023; however, information pertaining to qualification of products may be obtained from the Defense Supply Center, Columbus, ATTN: DSCC-VQP, PO Box 3990, Columbus, OH 43218-3990, or by e-mail to vqp.chief@dla.mil.

6.4 Application information.

6.4.1 Life degradation. The degradation limits change with the duration of the life test. The FRLs are based on catastrophic failures and parameter drifts beyond the degradation limits.

6.4.2 Ripple voltage. The peak of the applied ac ripple voltage plus the applied dc voltage must not exceed the dc voltage rating of the capacitor, either forward or reverse.

Downloaded from http://www.everyspec.com

6.4.3 Paralleling capacitors. If capacitors are to be paralleled, the capacitance values should be equal and the ripple current through each should be within 20 percent of each other.

6.4.4 Solder dip/retinning. Extreme care must be taken when solder dipping/retinning capacitors with insulating sleeving. Flux residue may become entrapped under the sleeving, and cause deterioration of the case if not properly rinsed.

6.4.5 Cleaning solvents. Cleaning solvents may become entrapped under the sleeving on insulated capacitor styles. Care should be taken to insure proper rinsing to prevent marking or case deterioration.

6.5 Selection and use information. Equipment designers should refer to MIL-HDBK-198, "Capacitors, Selection and Use of" for a selection of standard capacitor types and values for new equipment design. Application and use information concerning these capacitors are also provided in MIL-HDBK-198.

6.6 Substitutability data. For a cross reference of the substitutability relationship of superseded styles, see the applicable associated specification.

6.7 Hermetic seal. For the purpose of this specification, a hermetically-sealed capacitor is one in which the capacitive element is contained within a sealed metal enclosure (see 3.5.1), where sealing is accomplished by material fusion, welding, brazing, or soldering to glass.

6.8 Non-Hermetic sealed. Non-hermetic sealed capacitors were once a part of this specification. They are no longer included or referenced in this document.

6.9 Discharging capacitors before installation. Users are cautioned to make sure the capacitors are fully discharged before their installation on printed wiring boards. A suggested way to do this is to discharge the capacitors through a 470 ohm composition resistor for 5 seconds, and then short them for an additional 30 seconds.

6.10 Tape and reel packaging. Tape and reel packaging is not recommended because of possible damage to the capacitor.

6.11 Tin whisker growth. The use of alloys with tin content greater than 97 percent, by mass, may exhibit tin whisker growth problems after manufacture. Tin whiskers may occur anytime from a day to years after manufacture and can develop under typical operating conditions, on products that use such materials. Conformal coatings applied over top of a whisker-prone surface will not prevent the formation of tin whiskers. Alloys of 3 percent lead, by mass, have shown to inhibit the growth of tin whiskers. For additional information on this matter, refer to ASTM-B545 (Standard Specification for Electrodeposited Coatings of Tin).

6.12 Subject term (key word) listing.

Capacitance.
Parts per million (PPM).
Statistical process control (SPC).

Downloaded from http://www.everyspec.com

* 6.13 Environmentally preferable material. Environmentally preferable materials should be used to the maximum extent possible to meet the requirements of this specification. As of the dating of this document, the U.S. Environmentally Protection Agency (EPA) is focusing efforts on reducing 31 priority chemicals. The list of chemicals and additional information is available on their website at http://www.epa.gov/osw/hazard/wastemin/priority.htm. Included in the list of 31 priority chemicals are cadmium, lead, and mercury. Use of the materials on the list should be minimized or eliminated unless needed to meet the requirements specified herein (see section 3).

6.14 Changes from previous issue. The margins of this specification are marked with asterisks to indicate where changes from the previous issue were made. This was done as a convenience only and the Government assumes no liability whatsoever for any inaccuracies in these notations. Bidders and contractors are cautioned to evaluate the requirements of this document based on the entire content irrespective of the marginal notations and relationship to the last previous issue.

Downloaded from http://www.everyspec.com

APPENDIX A

PROCEDURE FOR QUALIFICATION INSPECTION

A.1. SCOPE

A.1.1 Scope. This appendix details the procedure for submission of samples, with related data, for qualification inspection of capacitors covered by this specification. This appendix is a mandatory part of the specification. The information contained herein is intended for compliance.

A.2. APPLICABLE DOCUMENTS. This section is not applicable to this appendix.

A.3. SUBMISSION

A.3.1 Sample. For qualification to FRL M (see 3.1) in accordance with table II.

A.3.1.1 Single-type submission. A sample consisting of the following quantities shall be submitted for each style, dc rated voltage, capacitance tolerance, and electrolyte for which qualification is sought:

For styles CLR65, and CLR69: 192 sample units each.

* For styles CLR93, CLR79, CLR81, CLR82, CLR90, and CLR91: 236 sample units each.

A.3.1.2 Voltage-group submission (see 3.1). A sample consisting of the quantities listed in A.3.1.1 and divided as shown in table AI shall be submitted as prescribed herein and in accordance with table II. The capacitance tolerance and electrolyte of the submitted sample units shall be the same. Examples of voltage-group capacitor submissions are listed in table A-I.

A.4. EXTENT OF QUALIFICATION

A.4.1 Single-type submission.

A.4.1.1 Capacitance values and tolerances. Qualification of capacitance values shall be restricted to values equal to and less than the capacitance value in the style, voltage, and electrolyte submitted. Capacitance tolerance qualification shall be restricted to the capacitance tolerances equal to and wider than the tolerance submitted.

A.4.2 Voltage-group submission. Qualification of the types submitted shall be the basis for qualification of all intermediate voltages of the voltage group submitted, provided that the style and the electrolyte are the same. Capacitance-range qualification for each voltage submitted shall be restricted to the capacitance values equal to and less than the capacitance value submitted. For intermediate and lower voltages in the same voltage group, capacitance-range qualification shall be restricted to capacitance values equal to and less than the higher capacitance value submitted. Capacitance-tolerance qualification shall be restricted to the capacitance tolerances equal to and wider than the tolerance submitted.

Downloaded from http://www.everyspec.com

APPENDIX A

A.5. QUALIFICATION APPROVAL FOR LOWER FR LEVELS

A.5.1 Extension of qualification. Extension of qualification to lower FR levels shall be in accordance with 4.4.4.1 of this specification.

TABLE A-I. Examples of voltage-group submission for "M" FRL.

Style	PIN of capacitors to be submitted 1/ 2/ 3/	Number of sample units 4/	Capacitance µF	Rated voltage V dc		Case size
CLR 79	5/ M39006/22-0020-	94	1200	6	Voltage group I	T4
	-0080-	94	540	15		T4
	-0078-	14	270	15		T3
	-0072-	14	120	15		T2
	-0066-	14	33	15		T1
	-0100-	94	350	25	Voltage group II	T4
	-0180-	94	110	75		T4
	-0178-	14	56	75		T3
	-0172-	14	33	75		T2
	-0166-	14	6.8	75		T1
	-0200-	94	86	100	Voltage group III	T4
	-0220-	94	56	125		T4
	-0218-	14	25	125		T3
	-0212-	14	14	125		T2
	-0206-	14	3.6	125		T1
CLR 81	M39006/25-0008-	94	2200	6	Voltage group I	T4
	-0032-	94	1000	15		T4
	-0030-	14	820	15		T3
	-0028-	14	390	15		T2
	-0026-	14	100	15		T1
	-0040-	94	680	25	Voltage group II	T4
	-0072-	94	220	75		T4
	-0070-	14	180	75		T3
	-0068-	14	82	75		T2
	-0066-	14	22	75		T1
	-0080-	94	120	100	Voltage group III	T4
	-0088-	94	82	125		T4
	-0086-	14	47	125		T3
	-0084-	14	27	125		T2
	-0082-	14	6.8	125		T1

See footnotes at top of next page.

Downloaded from http://www.everyspec.com

APPENDIX A

TABLE A-I. Examples of voltage-group submission for "M" FRL - Continued.

1/ All dash numbers are for the tightest capacitance tolerance for each capacitance value.
2/ Dash numbers represent the highest capacitance and lowest voltage for case size T4, and the highest capacitance and highest voltage for each case size, in each voltage group.
3/ Dash number shall include the letter "H" to indicate the optional random vibration requirement or the "-" shall be deleted.
4/ A total of 230 samples of each voltage group for each style shall be used; that is, the 236 samples shown in table II, minus 1 for an allowed failure, and minus 5 for the fungus test if certification of fungus resistance is given by the manufacturer. The quantities of 14 in each voltage group are for the groups III and VII tests in table II for additional case sizes.
5/ All CLR79 dash numbers are for non-compression seals. For the equivalent dash numbers for compression seals, see MIL-PRF-39006/22.

Custodians:
Army - CR
Navy - EC
Air Force - 85
DLA - CC
NASA - NA

Review activities:
Army - AR
Navy - AS, MC, OS, SH
Air Force - 19, 99

Preparing activity:
DLA - CC

(Project 5910-2010-013)

NOTE: The activities listed above were interested in this document as of the date of this document. Since organizations and responsibilities can change, you should verify the currency of the information above using ASSIST Online database at https://assist.daps.dla.mil .