Downloaded from http://www.everyspec.com

INCH-POUND
MIL-PRF-39002A
1 February 1999
SUPERSEDING
MIL-R-39002
23 April 1964

PERFORMANCE SPECIFICATION

RESISTORS, VARIABLE, WIREWOUND, SEMI-PRECISION, GENERAL SPECIFICATION FOR

This specification is approved for use by all Departments and Agencies of the Department of Defense.

1. SCOPE

1.1 Scope. This specification covers the general requirements for semi-precision, wirewound, variable, resistors having a resistance element of wire, wound on an insulated form shaped in an arc, so that a contact bears uniformly on the resistance element, when adjusted by a contact shaft. The electrical output (in terms of percent of applied voltage) is linear with respect to the angular position of the contact arm. These resistors are capable of full-load operation (when the maximum resistance is engaged) at a maximum ambient temperature of 85°C, and are suitable for continuous operation, when properly derated, at a maximum temperature of 135°C (see figure 2). These resistors have a tolerance of ±5 percent.

1.2 Classification.

1.2.1 Part or Identifying Number (PIN). The PIN is in the following form and as specified (see 3.1 and 6.2).

RK09	SA	C	S	101
Style (1.2.1.1)	Shaft and type mounting (1.2.1.2)	Resistance-temperature characteristic (1.2.1.3)	Terminal (1.2.1.4)	Resistance (1.2.1.5)

1.2.1.1 Style. The style is identified by the two-letter symbol “RK” followed by a two-digit number; the letters identify semi-precision wirewound, variable resistors, and the number identified the physical size.

1.2.1.2 Shaft and type mounting. The style of shaft, type of mounting, and length of shaft is identified by a two-letter symbol. The first letter indicates the style of shaft and type of mounting and the second letter indicates the length of shaft in accordance with table I and table II, respectively.

Beneficial comments (recommendations, additions, deletions) and any pertinent data which may be of use in improving this document should be addressed to: Defense Supply Center, Columbus, ATTN: DSCC-VAM, 3990 East Broad Street, Columbus, OH 43213-1199, by using the Standardization Document Improvement Proposal (DD Form 1426) appearing at the end of this document or by letter.

AMSC N/A FSC 5905
DISTRIBUTION STATEMENT A. Approved for public release; distribution is unlimited.

Downloaded from http://www.everyspec.com

TABLE I. Style of shaft and type of mounting.

Symbol	Style of shaft	Type of mounting	
		Standard bushing	Locking bushing
S	Slotted	X	
U	Slotted		X

TABLE II. Length of operating shaft. 1/

Symbol	Standard length of shaft measured from mounting surface of resistor	
	Standard bushing	Locking bushing
	Inches ±1/32 (0.794)	Inches ±1/32 (0.794)
A	½ (12.7)	½ (12.7)
B	5/8 (15.875)	
D	7/8 (22.25)	7/8 (22.25)
G	1 ¼ (31.75)	
K	2 ½ (63.5)	

1/ Or as specified, see 3.1.

1.2.1.3 Resistance temperature characteristic. The resistance-temperature characteristic of the completed resistor is identified by a single letter in accordance with table III.

TABLE III. Resistance-temperature characteristic.

Symbol	Maximum resistance-temperature characteristic 1/			
	Under 50 ohms		50 ohms and over	
	Percent per °C	Parts per million per °C (ppm)	Percent per °C	Parts per million per °C (ppm)
C	±0.020	±200	±0.007	±70

1/ Referred to an ambient temperature of 25°C.

Downloaded from http://www.everyspec.com

1.2.1.4 Terminals. The terminals are identified by a single letter in accordance with table IV.

TABLE IV. Terminals.

Symbol	Type of terminal
S	Solder lug

1.2.1.5 Resistance. The nominal total resistance value expressed in ohms is identified by a three-digit number; the first two digits represent significant figures and the last digit specified the number of zeros to follow. The following are examples of symbols for resistance values:

100 = 10 ohms.
101 = 100 ohms.
102 = 1,000 ohms.

1.2.1.6 Summary of requirements. The summary of requirements of the styles of this specification is in accordance with table V (see section 3).

TABLE V. Performance requirements.

Style	RK09	RK11
Maximum ambient temperature at rated wattage (see fig. 2) - - -	85°C	85°C
Maximum ambient temperature at zero wattage derating (see fig. 2)	135°C	135°C
Power rating in watts -	1.5	1.5
Mechanical travel in degrees (see 3.9) -	300° ±5°	360°
Actual effective-electrical travel in degrees (see 3.10) - - - - - - - -	300° ±5°	300° ±3°
Maximum noise (degradation) (see 3.11) -	500 ohms	500 ohms
Maximum independent linearity (initial) (see 3.13) - - - - - - - - - - -	3 percent	1 percent
Maximum independent linearity (degradation) (see 3.13) - - - - - -	150 percent	150 percent
Minimum insulation resistance (dry) (see 3.14) - - - - - - - - - - - - - -	1,000 megohms	1,000 megohms
Minimum insulation resistance (wet) (see 3.18) - - - - - - - - - - - - - -	100 megohms	100 megohms
Torque (starting) (see 3.15.1) in ounces -	0.5 to 6.0	0.5 to 6.0
Thermal shock, maximum change 1/ in total resistance(see 3.16) - -	1 percent	1 percent
Maximum RTC in ppm/°C (referred to 25°C) - - - - - - - - - - - - - - - -		
(see 3.17) 50 ohms and above - - - - - - - - - - - - - -	± 70	± 70
Below 50 ohms watts -	± 200	± 200
Moisture resistance, maximum change in total resistance (see 3.18)	3 percent	3 percent
Acceleration, maximum change in total resistance (see 3.19) - - -	1 percent	1 percent
Shock, specified pulse (see 3.20) -	1 percent	1 percent
Vibration, high frequency, maximum change in total resistance (see 3.21) - - - - - -	1 percent	1 percent
Resistance to soldering heat, maximum change in total resistance (see 3.23) - - -	1 percent	1 percent
Life, maximum change in total resistance (see 3.24) - - - - - - - - -	2 percent	2 percent
Low-temperature operation, maximum change in total resistance (see 3.25) - - - -	1 percent	1 percent
High-temperature exposure, maximum change in total resistance (see 3.26) - - - -	3 percent	3 percent
Rotational life, maximum change in total resistance (see 3.27)	3 percent	3 percent

Downloaded from http://www.everyspec.com

2. APPLICABLE DOCUMENTS

2.1 General. The documents listed in this section are specified in sections 3 and 4 of this specification. This section does not include documents cited in other sections of this specification or recommended for additional information or as examples. While every effort has been made to ensure the completeness of this list, document users are cautioned that they must meet all specified requirements documents cited in sections 3 and 4 of this specification, whether or not they are listed.

2.2 Government documents.

2.2.1 Specifications, standards, and handbooks. The following specifications, standards, and handbooks form a part of this document to the extent specified herein. Unless otherwise specified, the issues of these documents are those listed in the issue of the Department of Defense Index of Specifications and Standards (DoDISS) and supplement thereto, cited in the solicitation (see 6.2).

DEPARTMENT OF DEFENSE

MIL-PRF-39002/1 - Resistor, Variable, Wire-wound, Semi-precision, Style RK09.
MIL-PRF-39002/3 - Resistor, Variable, Wire-wound, Semi-precision, Style RK11.

STANDARDS

DEPARTMENT OF DEFENSE

MIL-STD-202 - Test Methods Standard Electronics and Electrical Component Parts.
MIL-STD-1285 - Marking of Electrical and Electronic Parts.

(Unless otherwise indicated, copies of the above specifications, standards, and handbooks are available from the Defense Automated Printing Service, Building 4D (DPM-DODSSP), 700 Robbins Avenue, Philadelphia, PA 19111-5094.)

2.4 Order of precedence. In the event of a conflict between the text of this document and the references cited herein (* except for related associated specifications, specification sheets, or MS standards), the text of this document takes precedence. Nothing in this document, however, supersedes applicable laws and regulations unless a specific exemption has been obtained.

3. REQUIREMENTS

3.1 Specification sheets. The individual item requirements shall be as specified herein and in accordance with the applicable specification sheet. In the event of any conflict between the requirements of this specification and the specification sheet, the latter shall govern.

3.2 Qualification. Resistors furnished under this specification shall be a product which has been tested, and has passed the qualification tests as specified in 4.4, and has been listed on or approved for listing on the applicable Qualified Products List (QPL) (see 6.3).

3.3 Materials. Materials shall be used which will enable the resistors to meet the performance requirements of this specification. Acceptance or approval of any constituent material shall not be construed as a guaranty of the acceptance of the finished product.

3.4 Interface and physical dimension requirements. Resistors shall meet the interface and physical dimension requirements as specified (see 3.1).

3.4.1 Resistance element. The resistance element shall be resistance wire, wound on a suitable form which shall not char or break down as a result of the tests specified herein. The element shall be a continuous unbroken length of conductor without joints, bonds, or welds, except at the junction of resistor element and the winding terminals.

Downloaded from http://www.everyspec.com

3.4.2 Protective housing or enclosure. The resistance element of completed resistors shall be protected by a housing, or an enclosure, or both, which shall completely cover the exterior of the resistance element. The protective housing or enclosure shall be free from holes, fissures, chips, or other faults, and shall be such as to minimize the establishment of leakage paths between the terminals resulting from collection of moisture film on the exterior surface of the housing or enclosure. If the housing is made from an aluminum alloy, it shall be properly protected against corrosion and all fasteners shall be suitably plated. Unplated copper-alloy metals shall not be used in contact with aluminum.

3.4.2.1 Nonturn device. A nonturn device shall be furnished which will prevent rotation of the resistors with respect to the surface on which they are mounted. The nonturn device shall be permanently fastened to the resistor body and shall be located as specified (see 3.1).

3.4.2.2 Standard and locking bushing. Standard or locking bushings shall be as specified for the applicable style (see.3.1).

3.4.2.3 Hardware. When specified (see 3.1), each resistor shall be furnished with a corrosion-resistance (see 3.22) hexagonal mounting nut (see 3.22) a corrosion-resistant, internal tooth lock washer; and, when applicable, a locking nut not assembled on the resistor, unless otherwise specified (see 6.2). For direct Government orders, hardware shall be assembled on the resistor. When applicable, the dimensions of the hardware shall be as specified (see 3.1).

3.4.3 Operating shaft. All operating shafts shall be made from corrosion-resistant metal.

3.4.3.1 Style. Operating shafts shall be slotted (see 3.1). In no case shall the slots of slotted shafts be deep enough to interfere with shaft retainers or bearing surface.

3.4.3.2 Contact-arm assembly. Uniform contact pressure on the resistance element shall be maintained by positive pressure and shall permit smooth electrical and mechanical control of the resistor over the entire range. The rotating contact shall have continuous electrical contact with its terminal throughout the entire mechanical travel and shall be electrically insulated from the operating shaft, bushing, and resistor housing.

3.4.4 Stops. A stop shall be employed to limit the mechanical rotation of the operating shaft. The contact arm shall not engage the stop.

3.4.5 Terminals. Terminals shall be as specified in table IV. Connection of terminals to the resistance element shall be mechanically strong. All terminals shall be fastened securely. Pressure-type connections between end terminals and the resistance element shall not be used. Terminals shall be protected by a corrosion-resistant metallic coating. All terminals shall be suitably treated to facilitate soldering.

3.4.5.1 Terminal designation. Resistor terminations shall be color coded or numbered (see 3.1) and the circuit diagram shall be marked as applicable, on the resistor in a legible manner, as shown on figure 1. Clockwise signifies the direction of rotation of the operating shaft when the resistor is viewed from the shaft end.

Downloaded from http://www.everyspec.com

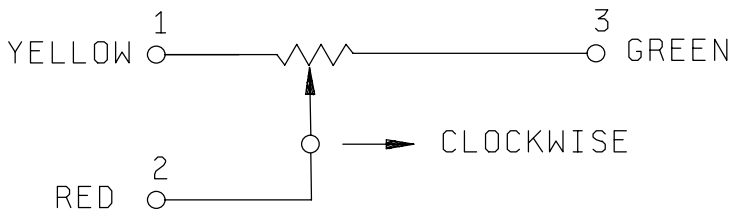

FIGURE 1. Circuit diagram.

3.5 Power rating. The resistors shall have a power rating based on continuous full-load operation at the ambient temperature of 85°C. The power rating is dependent on the ability of the resistors to meet the life requirements specified in 3.24. For temperatures in excess of that specified, the load shall be derated as shown on figure 2. Power rating as specified (see 3.1) is applicable only when the maximum resistance is engaged in the circuit. When only a portion of the resistance element is engaged in the circuit, the power rating is reduced in approximately the same proportion as the resistance.

3.6 Voltage rating. The theoretically calculated rated continuous working voltage or the voltage equivalent to power rating (rated wattage) shall be determined from the following formula:

$$E = \sqrt{PR}$$

Where:
E = Rated or root mean square (rms) continuous working voltage.
P = Power rating.
R = Nominal total resistance.

Downloaded from http://www.everyspec.com

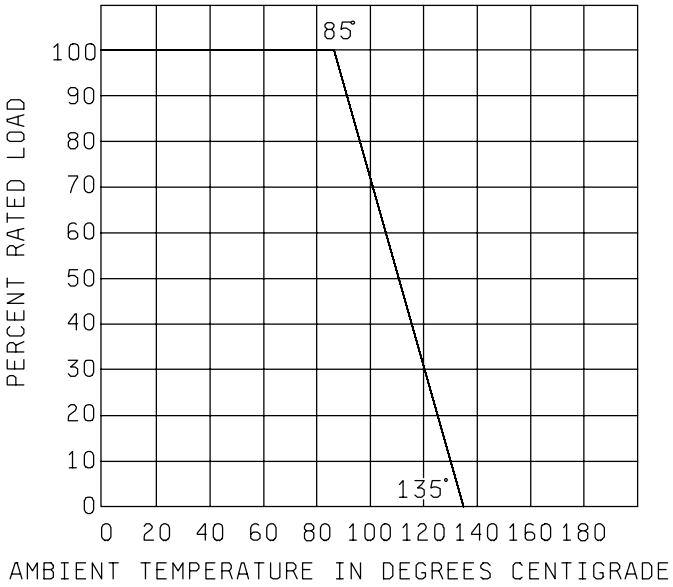

FIGURE 2. Derating curves for high-ambient temperature.

3.7 DC resistance.

3.7.1 Total resistance. When measured as specified in 4.6.2.1, the total direct-current (dc) resistance shall not deviate from the specified nominal resistance (see 3.1) by more than ±5 percent.

3.7.2 Absolute minimum resistance (not applicable to style RK09). When measured as specified in 4.6.2.2, the absolute minimum resistance shall not exceed 0.5 percent of the nominal total resistance value, or 1 ohm, whichever is greater.

3.7.3 End resistance. When measured as specified in 4.6.2.3, the end resistance shall not exceed 3 percent of the nominal total resistance value, or 1 ohm, whichever is greater.

3.8 Continuity. When resistors are tested as specified in 4.6.3, the change in voltage or resistance shall be unidirectional throughout the effective electrical travel.

3.9 Mechanical travel. When resistors are tested as specified in 4.6.4, the mechanical travel shall be as specified (see 3.1).

3.10 Actual effective-electrical travel. When resistors are tested as specified in 4.6.5, the actual effective electrical travel shall be as specified (see 3.1).

3.11 Peak noise. When resistors are tested as specified in 4.6.6, the peak-noise resistance shall not exceed 500 ohms, with the following exceptions:

In group I of table VI:	Shall not exceed 100 ohms.
In table VII:	Shall not exceed 100 ohms.
In group III of table VI:	Shall not exceed 200 ohms.

Downloaded from http://www.everyspec.com

3.12 Dielectric withstanding voltage. When resistors are tested as specified in 4.6.7, there shall be no evidence of damage, arcing, or breakdown; the leakage current shall not exceed 1 milliampere.

3.13 Independent linearity tolerance. When resistors are tested as specified in 4.6.8, the initial tolerance shall not exceed ±3.0 percent for style RK09 and ±1 percent for all other styles.

3.14 Insulation resistance. When resistors are tested as specified in 4.6.9, the insulation resistance shall be not less than 1,000 megohms.

3.15 Torque.

3.15.1 Starting. When resistors are tested as specified in 4.6.10.1, torque required to affect rotation shall be 0.5 ounce-inch to 6 ounce-inches.

3.15.2 Stop. When tested as specified in 4.6.10.2, resistors shall withstand the specified stop torque without damage to the contact arm and stop.

3.15.3 Locking. When tested as specified in 4.6.10.3, resistors with locking bushings shall withstand the specified locking torque without damage to the bushing, thread, and nonturn device. The contact arm shall not move when subjected to the test.

3.16 Thermal shock. When resistors are tested as specified in 4.6.11, the change in total resistance shall not exceed ±(1 percent +0.05 ohm); the change in setting stability shall not exceed 1 percent, of the total applied voltage, plus the specified nominal resolution (see 3.1); and there shall be no electrical discontinuity or evidence of mechanical damage. The independent linearity tolerance shall not exceed 150 percent of specified value (see 3.13).

3.17 Resistance-temperature characteristic. When resistors are tested as specified in 4.6.12, the resistance-temperature characteristic, at each of the test temperatures specified in table XI, referred to an ambient temperature of 25°C, shall not exceed ±0.007 percent (±70 ppm/°C) for resistance values of 50 ohms and above. For resistance values below 50 ohms the resistance-temperature characteristic shall not exceed ±0.020 percent (±200 ppm/°C).

3.18 Moisture resistance. When tested as specified in 4.6.13, resistors shall meet the following requirements:

Total resistance:	Change shall not exceed ±3 percent.
Insulation resistance:	Shall be not less than 100 megohms.
Independent linearity tolerance:	Shall not exceed 150 percent of specified value (see 3.13).
Visual examination:	There shall be no evidence of mechanical damage.

3.19 Acceleration. When resistors are tested as specified in 4.6.14, the total resistance shall not exceed ±(1 percent +0.05 ohm); the change in setting stability shall not exceed 1 percent of the total applied voltage plus the specified nominal resolution (see 3.1); there shall be no electrical discontinuity or evidence of mechanical damage.

3.20 Shock, specified pulse. When resistors are tested as specified in 4.6.15, the change in the total resistance shall not exceed ±(1 percent +0.05 ohm); the change in setting stability shall not exceed 1 percent of the total applied voltage plus the specified nominal resolution (see 3.1); and there shall be no electrical discontinuity or evidence of mechanical damage.

Downloaded from http://www.everyspec.com

3.21 Vibration, high frequency. When tested as specified in 4.6.16, there shall be no electrical discontinuity, and resistors shall meet the following requirements:

Setting stability:	Change shall not exceed 1 percent of the total applied voltage plus the specified nominal resolution (see 3.1).
Total resistance:	Change shall not exceed ±(1 percent +0.05 ohm).
Starting torque:	Shall not exceed 150 percent of specified starting torque (see 3.1).
Independent linearity tolerance:	Shall not exceed 150 percent of specified value (see 3.13).
Visual examination:	There shall be no evidence of mechanical damage.

3.22 Salt spray (corrosion). When resistors are tested as specified in 4.6.17, there shall be no evidence of corrosion of the base metal; and the resistors shall be mechanically operative.

3.23 Resistance to soldering heat. When resistors are tested as specified in 4.6.18, the change in total resistance shall not exceed ±(1 percent +0.05 ohm); and there shall be no evidence of mechanical damage.

3.24 Life. When tested as specified in 4.6.19, resistors shall meet the following requirements:

Resistance between end terminals, with the contact arm in the position for setting stability:	The change shall not exceed 2 percent plus the specified nominal resolution (see 3.1) between the initial measurement and each of the succeeding measurements.
Setting stability:	Change shall not exceed 2 percent of the total applied voltage plus the specified nominal resolution (see 3.1).
Total resistance:	Change shall not exceed 2 percent.
Dielectric withstanding voltage (at atmospheric pressure):	As specified in 3.12.
Starting torque:	Shall not exceed 150 percent of specified starting torque (see 3.1).
Independent linearity tolerance:	Shall not exceed 150 percent specified value (see 3.13).
Visual examination:	There shall be no evidence of mechanical damage.

3.25 Low-temperature operation. When tested as specified in 4.6.20, resistors shall meet the following requirements:

Setting stability:	Change shall not exceed 1 percent of the total applied voltage plus the specified nominal resolution (see 3.1).
Starting torque:	Shall not exceed 150 percent of specified starting torque (see 3.15).
Total resistance:	Change shall not exceed ±(1 percent +0.05 ohm).
Visual examination:	There shall be no evidence of mechanical damage.

3.26 High-temperature exposure. When tested as specified in 4.6.21, resistors shall meet the following requirements:

Setting stability:	Change shall not exceed 1 percent of the total applied voltage plus the specified maximum resolution (see 3.1).
Total resistance:	Change shall not exceed ±3 percent.
Starting torque:	Shall not exceed 150 percent of specified starting torque (see 3.1).
Dielectric withstanding voltage (at atmospheric pressure):	As specified in 3.12.
Insulation resistance:	Shall not be less than 1,000 megohms.
Independent linearity tolerance:	Shall not exceed 150 percent of specified value (see 3.13).
Visual examination:	There shall be no evidence of mechanical damage.

3.27 Rotational life. When resistors are tested as specified in 4.6.22, the change in total resistance between initial and any succeeding measurement shall not exceed ±3 percent; and there shall be no mechanical damage. The independent linearity tolerance shall not exceed 150 percent of the specified value (see 3.13).

Downloaded from http://www.everyspec.com

3.28 Terminal strength. When resistors are tested as specified in 4.6.23, there shall be no evidence of mechanical damage, and resistors shall be electrically continuous.

3.29 Marking. Resistors shall be marked in accordance with MIL-STD-1285, with the PIN and the manufacturer's name or code symbol and date code. The date code shall be in accordance with MIL-STD-1285. The circuit diagram shall be marked on the resistor as specified in 3.4.5.1. The location of the manufacturer's code symbol shall be at the discretion of the manufacturer. There shall be no space between the symbols which comprise the PIN. If lack of space requires it, the PIN may be placed on two lines or on separate surfaces. In this event, the PIN shall be divided between the temperature characteristic and terminal symbols, as shown in the following example:

RK09SAC
S101

Marking shall remain legible at the end of all tests.

3.30 Recycled, recovered, or environmentally preferable materials. Recycled, recovered, or environmentally preferable materials should be used to the maximum extent possible provided that the material meets or exceeds the operational and maintenance requirements, and promotes economically advantageous life cycle costs.

3.31 Workmanship. Resistors shall be processed in such a manner as to be uniform in quality and shall be free from holes, fissures, chips, corrosion, and malformation; the terminals shall be unbroken and not crushed or nicked; and the resistors shall be free from other defects that will affect life, serviceability, or appearance.

4. VERIFICATION

4.1 Classification of inspection. The inspection requirements specified herein are classified as follows:

a. Qualification inspection (see 4.4).

b. Conformance inspection (see 4.5).

4.2 Test equipment and inspection facilities. Test equipment and inspection facilities shall be of sufficient accuracy, quality, and quantity to permit performance of the required inspection. The supplier shall establish calibration of inspection equipment to the satisfaction of the Government.

4.3 Inspection conditions. Unless otherwise specified herein, all inspection shall be made in accordance with paragraph 2.2 of MIL-STD-202.

4.3.1 Precautions. Adequate precautions shall be taken during tests to prevent condensation of moisture on resistors, except during the moisture-resistance and thermal-shock tests.

4.4 Qualification inspection. Qualification inspection will be performed at a laboratory approved by the Government (see 6.3).

Downloaded from http://www.everyspec.com

TABLE VI. Qualification inspection. 1/

Exam nat on or test	Requ rement paragraph	Method paragraph	Number of defect ves a owed 2/	
Group I				
V sua and mechan ca exam nat on 3/ 4/	3.1, 3.3 to 3.4.5.1 nc us ve, and 3.29 to 3.30.3 nc us ve	4.6.1		
Tota res stance 4/	3.7.1	4.6.2.1		
Cont nu ty 4/	3.8	4.6.3		
Mechan ca trave 4/	3.9	4.6.4		
Actua effect ve-e ectr ca trave 4/	3.10	4.6.5		
Abso ute m n mum res stance 4/ (not app cab e to sty e RK09)	3.7.2	4.6.2.2		
End res stance 4/	3.7.3	4.6.2.3	1	
Peak no se 4/	3.11	4.6.6		
D e ectr c w thstand ng vo tage 4/	3.12	4.6.7		
Independent near ty to erance	3.13	4.6.8		
Insu at on res stance 4/	3.14	4.6.9		
Torque 4/	3.15	4.6.10.1		
Therma shock 4/	3.16	4.6.11		
Group II				
Res stance-temperature character st c 4/	3.17	4.6.12		
Mo sture res stance	3.18	4.6.13	1	
Peak no se	3.11	4.6.6		
Group III				
Acce erat on	3.19	4.6.14		
Shock, spec f ed pu se	3.20	4.6.15		
V brat on, h gh frequency	3.21	4.6.16	1	
Peak no se	3.11	4.6.6		
Sa t spray (corros on)	3.22	4.6.17		
Group IV				2
Res stance to so der ng heat	3.23	4.6.18		
L fe	3.24	4.6.19	1	
Peak no se	3.11	4.6.6		
Group V				
Low-temperature operat on	3.25	4.6.20		
H gh temperature exposure	3.26	4.6.21	1	
Peak no se	3.11	4.6.6		
Group VI				
Rotat ona fe	3.27	4.6.22		
Peak no se	3.11	4.6.6	1	
Term na strength	3.28	4.6.23		

1/ See tab e XII.
2/ Fa ure of a res stor n one or more tests of a group w be charged as a s ng e defect ve.
3/ Mark ng w be cons dered defect ve on y f the mark ng s eg b e. Mark ng s not app cab e to unenc osed res stors.
4/ Nondestruct ve tests.

4.4.1 Sample. The number of sample units comprising a sample of resistors to be submitted for qualification inspection shall be as specified in the appendix to this specification.

4.4.2 Test routine.

Downloaded from http://www.everyspec.com

4.4.2.1 Sample units with S-type terminals. Sample units with S-type terminals will be subjected to the qualification inspection specified in table VI, in the order shown. Thirty enclosed sample units will be subjected to the inspection of group I; they will then be divided equally into five groups of six units each, for group II to group VI, inclusive, and subjected to the inspection for their particular group. The two unenclosed sample units will be subjected only to the visual and mechanical examination of group I. The 12 sample units of the locking-bushing type will be subjected to test group I. They will then be divided equally into two groups of six units each, for group Ii and group VI, and subjected to the inspection for their particular group.

4.4.3 Defectives. Defectives in excess of those allowed in table VI will be cause for refusal to grant qualification.

4.4.4 Retention of qualification. Every 24 months, the manufacturer shall verify the retention of qualification to the qualifying activity. In addition, the manufacturer shall immediately notify the qualifying activity whenever the group B inspection results indicate failures of the qualified product to meet the requirements of this specification. Verification shall be based on meeting the following requirements:

a. The manufacturer has not modified the design of the item.

b. The specification requirements for the item have not been amended so far as to affect the character of the item.

c. Lot rejection for group A inspection does not exceed the group A sampling plan.

d. The requirements for group B inspection are met.

When group B requirements were not met and the manufacturer has taken corrective action satisfactory to the government, group B retesting shall be instituted.

4.5 Conformance inspection.

4.5.1 Inspection of product for delivery. Inspection of product for delivery shall consist of group A and group B inspection.

4.5.1.1 Inspection lot. Inspection lot, as far as practicable, shall consist of all resistors of the same style and characteristic regardless of the resistance value produced in a period not to exceed 30 days, produced under essentially the same conditions, and offered for inspection at one time.

4.5.1.2 Resubmitted lots. If an inspection lot is rejected, the supplier may replace it with a new lot, rework it to correct the defects, or screen out the defective units, and submit it again for inspection. Resubmitted lots shall be kept separate from new lots and shall be clearly identified as resubmitted lots. Resubmitted lots shall be inspected, using tightened inspection.

4.5.1.3 Group A inspection. Group A inspection shall consist of the examinations and tests specified in table VII, in the order shown.

4.5.1.3.1 Sampling plan. A sample of parts from each inspection lot shall be randomly selected in accordance with the group A sampling plan of table IX. If one or more defects are found, the lot shall be reworked or screened and defectives removed. After reworking or screening and removal of defects, a new sample of parts shall be randomly selected in accordance with the group A sampling plan of table IX. If one or more defects are found in this second sample, the lot shall be rejected and not supplied to this specification.

Downloaded from http://www.everyspec.com

4.5.1.4 Group B inspection. Group B inspection shall consist of the tests specified in table VIII, in the order shown. The tests shall be performed on sample units that have been subjected to and have passed the group A inspection, unless the Government considers it more practical to select a separate sample from the lot for group B inspection.

4.5.1.4.1 Sampling plan. A sample of parts shall be randomly selected in accordance with the group B sampling plan of table IX. If one or more defects are found, the lot shall be reworked or screened and defectives removed. After reworking or screening and removal of the defectives, a new sample of parts shall be randomly selected in accordance the group B sampling plan of table IX. If one or more defects are found in the second sample, the lot shall not be supplied to this specification.

4.5.1.4.2 Disposition of sample units. Sample units which have been subjected to and have passed the tests of group B inspection, and are within the specified initial resistance tolerance, may be delivered on the contract or order.

TABLE VII. Group A inspection.

Test	Requirement paragraph	Method paragraph	Number of samples
Visual and mechanical examination 1/	3.1, 3.3, to 3.4.5.1 inclusive, 3.3. and 3.30.3	4.6.1	
Total resistance	3.7.1	4.6.2.1	
Continuity	3.8	4.6.3	
Absolute minimum resistance (not applicable to style RK09)	3.7.2	4.6.2.2	See 4.5.1.3.1
End resistance	3.7.3	4.6.2.3	
Peak noise	3.11	4.6.6	
Independent linearity 2/	3.13	4.6.8	

1/ Marking defects shall be charged only for illegible, incorrect, or incomplete marking. Any subsequent electrical defect shall not be charged as a marking defect.
2/ This test is not applicable to style RK09.

TABLE VIII. Group B inspection. 1/ 2/

Test	Requirement paragraph	Method paragraph	Sampling plan
Mechanical travel	3.9	4.6.4	
Actual effective-electrical travel	3.10	4.6.5	
Dielectric withstanding voltage	3.12	4.6.7	See 4.5.1.4.1
Insulation resistance	3.14	4.6.9	
Torque	3.15	4.6.10.1	
Thermal shock	3.16	4.6.11	

1/ See table XII.
2/ If the manufacturer can demonstrate that this test has been performed five consecutive times with zero failures, the frequency of this test, with the approval of the qualifying activity, can be performed on an annual basis. If the design, material, construction, or processing of the part is changed, or if there are any quality problems or failures, the qualifying activity may require resumption of the original test frequency.

Downloaded from http://www.everyspec.com

TABLE IX. Group A and Group B sampling plan.

Lot size	Group A Sample size	Group B Sample size
2 to 5	---	100%
2 to 13	100%	---
6 to 50	---	5
51 to 90	---	7
14 to 150	13	---
91 to 150	---	11
151 to 280	20	13
281 to 500	29	16
501 to 1,200	34	19
1,200 to 3,200	42	23
3,201 to 10,000	50	29
10,001 to 35,000	60	35
35,001 to 150,000	74	40
150,001 to 500,000	90	---
500,001 and over	102	---

4.6 Methods of examination and test.

4.6.1 Visual and mechanical examination. Resistors shall be examined to verify that the materials, design, and construction, physical dimensions, marking, and workmanship are in accordance with the applicable requirements. (See 3.1, 3.3 to 3.4.5.1 inclusive, and 3.29 to 3.30.3 inclusive.)

4.6.2 DC resistance. Resistors shall be tested in accordance with method 303 of MIL-STD-202. The following details shall apply:

a. Measuring apparatus: Different types of measuring test equipment (multimeters, bridges, or equivalent) are permitted to be used on the initial and final readings of this test, provided the equipment is the same style, model, or if it can be shown that the performance of the equipment is equivalent or better.

b. Test voltage: Measurements of resistance shall be made by using the test voltages specified in table X. The test voltage chosen, whether it be the maximum or a lower voltage which would still provide the sensitivity required, shall be applied across the terminals of the resistor. This same voltage shall be used whenever a subsequent resistant measurement is made.

Downloaded from http://www.everyspec.com

TABLE X. DC resistance test voltage.

Total resistance, nominal	Maximum test voltage
Ohms	Volts
10 to 100, inclusive	1.0
Over 100 to 1,000 inclusive	3.0
Over 1,000 to 10,000 inclusive	10.0
Over 10,000	30.0

4.6.2.1 Total resistance (see 3.7.1). Total resistance shall be measured as specified in 4.6.2, between the resistance-element end terminals (terminal 1 and terminal 3 on figure 1) with the contact arm positioned against a stop. The positioning of the contact arm and terminal shall be the same for all subsequent measurements of the total resistance on the same specimen.

4.6.2.2 Absolute minimum resistance (not applicable to style RK09) (see 3.7.2). The contact arm shall be positioned near one end of the resistance element, so that a minimum value of resistance shall be measured as specified in 4.6.2 between the contact arm and the respective end terminal. The same procedure shall be followed for the other end of the resistance element. Rated current through the resistance element shall not be exceeded during this measurement.

4.6.2.3 End resistance (see 3.7.3). The contact arm shall be positioned at the extreme counter-clockwise limit of mechanical travel, and the resistance shall be measured as specified in 4.6.2 between the contact arm and the respective end terminal. The contact arm shall then be positioned at the extreme clockwise limit of mechanical travel, and the resistance shall be measured as specified in 4.6.2 between the contact arm and the respective end terminal. During this test, precaution shall be taken to insure that rated current of the resistance element is not exceeded. Clockwise and counterclockwise signify the direction of rotation of the operating shaft when the resistor is viewed from the shaft end.

4.6.3 Continuity (see 3.8). The operating shaft shall be rotated at a uniform rate such that the wiper traverses the effective electrical travel in both directions within 1 minute ±1/4 minute. During rotation, a suitable electrical device shall be connected between the wiper and either end terminal and monitored for uni-directional change in voltage or resistance. Precaution shall be exercised to prevent excessive current flow in the resistor during the test.

4.6.4 Mechanical travel (see 3.9). Resistors shall be placed in a suitable angle indicating device and the operating shaft shall be rotated from one stop to the other and held against the stops with the torque of approximately 1 pound-inch. The mechanical travel shall be determined from the number of degrees traversed between stops.

4.6.5 Actual effective-electrical travel (see 3.10). The actual effective-electrical travel shall be measured by placing the resistor in a suitable device and circuit which will indicate both angular position of the contact arm and voltage output. The actual effective-electrical travel will be the degree of rotation of the operating shaft in which a change in contact-arm position gives a measurable change in voltage output.

4.6.6 Peak noise (see 3.11). Peak noise resistance shall be measured with the measuring circuit shown on figure 3, or its equivalent. During this test, the contact arm shall be rotated in both directions for a total of ten cycles, through 90 percent of the actual effective-electrical travel, at the rate of 1 cycle for 5 seconds, minimum, to 2 minutes, maximum. The equivalent resistance shall be measured during the tenth cycle and calculated using the following formula:

$$\text{Noise} = \frac{Epn}{0.001} \text{ ohms.}$$

Where: Epn = the peak-noise signal voltage presented on the oscilloscope screen.

4.6.7 Dielectric withstanding voltage (see 3.12).

Downloaded from http://www.everyspec.com

4.6.7.1 At atmospheric pressure. Resistors shall be tested in accordance with method 301 of MIL-STD-202. The following details shall apply:

a. Special preparation: Resistors shall be mounted on metal plates of sufficient size to extend beyond the resistor extremities, and in such a manner that measurements can be made between the terminals tied together and any other external metal parts.

b. Magnitude of test voltage: 900 V rms.

c. Nature of potential: From an alternating current (ac) supply at commercial-line frequency and waveform.

d. Points of application of test voltage: Between the terminals connected together and all external metal portions of the resistors and metal-mounting plate.

e. Examinations and measurements: During the tests, the leakage current shall be monitored and the resistors examined for evidence of arcing and breakdown. At the conclusion of the test, resistors shall be examined for evidence of damage.

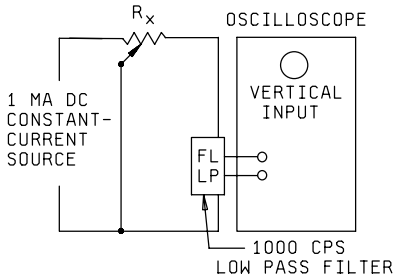

FIGURE 3. Peak noise measuring circuit.

4.6.7.2 At reduced barometric pressure. Resistors shall be tested in accordance with method 105 of MIL-STD-202. The following details and exceptions shall apply:

a. Method of mounting: As specified in 4.6.7.1a.

b. Test condition letter: D.

c. Period of time at reduced pressure prior to application of potential: 1 minute.

d. Tests during subjection to reduced pressure: A potential of 250 volts rms from an ac supply at commercial-line frequency and waveform shall be applied for 1 minute.

e. Points of application: As specified in 4.6.7.1d.

f. Examinations and measurements: As specified in 4.6.7.1e.

Downloaded from http://www.everyspec.com

4.6.8 Independent linearity tolerance (see 3.13). Independent linearity measurements shall be of the continuous output type or performed at intervals of not more than 10 percent of the effective electrical travel. The resistor shall be tested without load. Measurements shall be performed by using a dc potential of low enough value to insure that its application for the time necessary to obtain readings does not appreciably affect the measured values. The method employed for the measurement of linearity shall be such that the combined inherent errors of the measuring instruments shall not exceed 0.10 percent.

4.6.9 Insulation resistance (see 3.14). Resistors shall be tested in accordance with method 302 of MIL-STD-202. The following details shall apply:

a. Test condition letter: A or B, whichever is more practicable.

b. Special preparation: As specified in 4.6.7.1a.

c. Points of measurement: As specified in 4.6.7.1d.

4.6.10 Torque (see 3.15).

4.6.10.1 Starting. The maximum torque required to move the contact arm on the resistance element shall be determined at approximately 10 percent, 50 percent, and 90 percent of actual effective-electrical travel by the torque-wrench method or by any other method satisfactory to the Government.

4.6.10.2 Stop. Resistors shall be mounted on a metal panel by their normal mounting means. The total mechanical travel shall be measured. The contact arm shall then be rotated to each extreme limit of mechanical travel, and the 2 pound-inches static torque shall be applied through the operating shaft to the stops. The total mechanical travel shall again be measured, and the contact arm and stop shall be examined for damage.

4.6.10.3 Locking. Resistors shall be mounted on a metal panel by their normal mounting means and the locking device tightened with a torque of 8 pound-inches. With the locking device tightened, the operating shaft shall withstand a torque of 20 ounce-inches. Movement of the operating shaft shall be checked visually and resistors shall be examined for evidence of damage.

4.6.11 Thermal shock (see 3.16). Resistors shall be tested in accordance with method 107 of MIL-STD-202. The following details and exceptions shall apply:

a. Test condition letter: B.

b. Measurements before cycling: Total resistance and setting stability shall be measured as specified in 4.6.2.1 and 4.6.11.1, respectively.

c. Measurements after cycling: Setting stability, independent linearity tolerance and total resistance shall be measured as specified in 4.6.11.1, 4.6.8, and 4.6.2.1, respectively. Continuity of the contact arm shall be verified by connecting a vacuum-tube voltmeter of other suitable indicating device, between the contact-arm terminal and the counterclockwise end terminal. The applied voltage shall be in accordance with table X.

d. Examination after test: Resistors shall be examined for evidence of mechanical damage.

4.6.11.1 Setting stability. The contact arm shall be set at approximately 40 percent of the actual effective-electrical travel. An adequate dc test potential shall be applied between the end terminals. The voltage between the end terminals, and the voltage between one end terminal and the contact arm, shall be measured and applied to the following formula:

Setting stability in percent of total applied voltage = $\frac{E_1 \; x \; 100}{E_2}$

Downloaded from http://www.everyspec.com

The difference between the initial measurement made before environmental test and the measurement made after the test indicated the percent change.

4.6.12 Resistance-temperature characteristic (see 3.17). Resistors shall be tested in accordance with method 304 of MIL-STD-202. The following details shall apply.

a. Test temperatures: As specified in table XI.

b. Measurements at end of each period: Total resistance shall be measured as specified in 4.6.2.1, at the temperature maintained during the period.

TABLE XI. Resistance-temperature characteristic test temperatures.

Sequence	Temperature
	°C
1	1/ 25
2/ 2	-15
3	-55
4	1/ 25
2/ 5	65
6	135

1/ This temperature shall be considered the reference temperature for each of the succeeding temperatures.
2/ Not applicable in quality conformance inspection.

NOTE: At the option of the manufacturer, the reverse sequence of table XI may be as follows:
1 - Room temperature.
2 - Series of hot temperatures.
3 - Room temperature.
4 - Series of cold temperatures.

4.6.13 Moisture resistance (see 3.18). Resistors shall be tested in accordance with method 106 of MIL-STD-202. The following details and exceptions shall apply:

a. Mounting: On a stainless-steel panel of sufficient size to extend beyond the resistor extremities, and in such a manner as to allow electrical connections to be made to the terminals.

b. Initial measurement: Immediately following the initial drying period, total resistance shall be measured as specified in 4.6.2.1.

c. Polarization and loading voltage: The resistors shall be divided into two equal groups; one group shall be subjected to polarization and the other group to load.

(1) Polarization: During step 1 to step 6 inclusive, a 100-volt dc potential shall be applied with the positive lead connected to the resistor terminals tied together, and the negative lead connected to the mounting plate.

(2) Loading voltage: During the first 2 hours of step 1 and step 4 inclusive, a dc test potential equivalent to 100-percent rated wattage shall be applied to the resistors.

Downloaded from http://www.everyspec.com

d. Final measurements: Upon completion of step 6 of the final cycle, the resistors shall be held at the high humidity condition. While the resistors are still in the humidity chamber, the total resistance shall be measured as specified in 4.6.2.1.

Upon removal from the chamber, resistors shall be permitted to dry for 30 minutes ±15 minutes at room ambient conditions. The sample units shall not be subjected to forced circulating air during this test. Insulation resistance and independent linearity tolerance shall be measured as specified in 4.6.9 and 4.6.8, respectively.

e. Examination after test: Resistors shall be examined for evidence of mechanical damage.

4.6.14 Acceleration (see 3.19). Resistors shall be tested in accordance with method 212 of MIL-STD-202. The following details and exceptions shall apply:

a. Special mounting means: Resistors shall be mounted by their normal mounting means with their bodies restrained from movement on an appropriate fixture. The mounting fixture shall be constructed in such a manner as to insure that the mounting supports remain in a static condition with reference to the acceleration-test table. Resistors shall be mounted in a plane so that the acceleration force is applied in such a direction that the contact arm would tend to be forced either away from or along the resistance element of the resistor.

b. Test leads: Test leads used during the test shall be no larger than AWG size 22 stranded wire, so that the influence of the test lead on the resistor will be held to a minimum. The test-lead length shall be no longer than necessary.

c. Test condition letter: A, 50 G.

d. Measurements before acceleration: After mounting, total resistance and setting stability shall be measured as specified in 4.6.2.1 and 4.6.11.1, respectively.

e. Measurement during acceleration: Each resistor shall be monitored to determine electrical discontinuity of the resistance element, and between the contact arm and element, by a method that shall at least be sensitive enough to monitor or register automatically any electrical discontinuity of 0.1 milliseconds or greater duration.

f. Measurements after acceleration: Setting stability and total resistance shall be measured as specified in 4.6.11.1 and 4.6.2.1, respectively.

g. Examination after acceleration: Resistors shall be examined for evidence of mechanical damage.

4.6.15 Shock, specified pulse (see 3.20). Resistors shall be tested in accordance with method 213 of MIL-STD-202. The following details and exceptions shall apply:

a. Special mounting means: Resistors shall be mounted by their normal mounting means, with their bodies restrained from movement on an appropriate mounting fixture. The mounting fixture shall be constructed in such a manner as to insure that the mounting supports remain in a static condition with reference to the shock-test table. Resistors shall be mounted in relation to the test equipment in such a manner that the stress applied is in the direction which would be considered most detrimental.

b. Test leads: Test leads used during this test shall be no larger than AWG size 22 stranded wire, so that the influence of the test lead on the resistor will be held to a minimum. The test-lead length shall be no longer than necessary.

c. Measurements before shock: Total resistance and setting stability shall be measured as specified in 4.6.2.1 and 4.6.11.1, respectively.

d. Test-condition letter: I.

Downloaded from http://www.everyspec.com

e. Measurement during shock: Each resistor shall be monitored to determine electrical discontinuity of the resistance element, and between the contact arm and element, by a method that shall at least be sensitive enough to monitor or register, automatically any electrical discontinuity of 0.1 millisecond or greater duration.

f. Measurements after shock: Setting stability and total resistance shall be measured as specified in 4.6.11.1 and 4.6.2.1, respectively.

g. Examination after shock: Resistors shall be examined for evidence of mechanical damage.

4.6.16 Vibration, high frequency (see 3.21). Resistors shall be tested in accordance with method 204 of MIL-STD-202. The following details and exception shall apply:

a. Mounting: As specified in 4.6.15a.

b. Test leads: As specified in 4.6.15b.

c. Measurements before vibration: As specified in 4.6.15c.

d. Test-condition letter: D.

e. Measurements during vibration: As specified in 4.6.15e.

f. Measurements after vibration: As specified in 4.6.15f, independent linearity tolerance and torque as specified in 4.6.8 and 4.6.10.1, respectively.

g. Examination after vibration: Resistors shall be examined for evidence of mechanical damage.

4.6.17 Salt sprat (corrosion) (see 3.22). Resistors shall be tested in accordance with method 101 of MIL-STD-202. The following details shall apply:

a. Special mounting: As specified in 4.6.13a.

b. Test-condition letter: A.

c. Examination after exposure: Resistors shall be examined for corrosion.

4.6.18 Resistance to soldering heat (see 3.22). Resistors shall be tested in accordance with method 210 of MIL-STD-202. The following details shall apply:

a. Measurement before test: DC resistance shall be measured as specified in 4.6.2.

b. Test condition letter: A.

c. Depth of the immersion in the molten solder: To a point within 1/8 to 3/16 inch (3.2 to 4.8 mm) from the resistor body.

d. Measurement after test: Twenty-four hours ±4 hours after completion of the test, the dc resistance shall be measured as specified in 4.6.2. Resistors shall be examined for evidence of mechanical damage.

4.6.19 Life (see 3.24). Resistors shall be tested in accordance with method 108 of MIL-STD-202. The following details and exceptions shall apply:

a. Method of mounting: Resistors with a diameter of 2 inches (50.8 mm) or less shall be mounted on a 4-inch (101.6 mm) square, .050 inch (1.27 mm) thick, steel panel in still air. Still air is surrounding air with no circulation other than that created by the heat of the resistor being operated. Resistors with a diameter greater than 2 inches (50.8 mm) shall be mounted on a 6-inch (152.4 mm) square, .050 inch (1.27 mm)

Downloaded from http://www.everyspec.com

thick, steel panel in a similar manner, no shielding shall be located closer than 12 inches (304.8 mm) from the panel.

b. Test temperature and tolerance: 85°C ±5°C.

c. Initial measurements: Total resistance and setting stability shall be measured as specified in 4.6.2.1 and 4.6.11.1, respectively. After the resistors have been stabilized at 85°C ±5°C for at least 8 hours, the resistance between the end terminals, with the contact arm in position for setting stability, shall be measured.

d. Operating conditions: Rated dc continuous working voltage (see 3.1) shall be applied intermittently to the end terminals of the resistors, one and one-half hours on and one-half hour off, for a total of 1,000 hours, at the test temperature. Each resistor shall dissipate rated wattage, but shall not exceed maximum voltage. Adequate precaution shall be taken to maintain constant voltage on the resistor.

e. Test condition letter: D.

f. Measurements during test: While the resistors are still in the oven, resistance shall be measured between the end terminals, at the end of the one-half hour off periods, after 50 hours ±8 hours; 96 hours +48 hours, -0 hours; 500 hours +48 hours, -0 hours; 750 hours +48 hours, -0 hours; and 1,000 hours +48 hours, -0 hours have elapsed and compared to the similar reading taken in 4.6.19c.

g. Measurements after test: After the resistors have been removed from the oven and returned to room temperature, setting stability, total resistance, dielectric withstanding voltage (at atmospheric pressure), independent linearity tolerance, and torque shall be measured as specified in 4.6.11.1, 4.6.2.1, 4.6.7.1, 4.6.8, and 4.6.10.1, respectively.

h. Examination after test: Resistors shall be examined for evidence of mechanical damage.

4.6.20 Low temperature operation (see 3.25).

4.6.20.1 Mounting. Resistors shall be mounted in such a manner as to allow electrical connections to be made to the terminals.

Downloaded from http://www.everyspec.com

4.6.20.2 Procedure. Total resistance and setting stability shall be measured as specified in 4.6.2.1 and 4.6.11.1, respectively. The resistors shall be placed in a chamber at room temperature. The temperature shall be gradually decreased to -55°C +0°C, -5°C within a period of not less than one and one-half hours. For quality conformance inspection only, and at the option of the supplier, the resistors may be placed in the chamber when the chamber is already at the extreme low temperature. After one hour of stabilization at this temperature, setting stability shall be measured as specified in 4.6.11.1. Full rated continuous working voltage (see 3.1 and 3.6) shall be applied for 45 minutes. The resistors may be loaded individually or in parallel. Fifteen minutes +5 minutes, -0 minute after the removal of voltage, setting stability and torque shall be measured as specified in 4.6.11.1 and 4.6.10.1, respectively. The temperature in the chamber shall be gradually increased to room temperature within a period of not more than eight hours. The resistors shall be removed from the chamber, and maintained at a temperature of 25°C ±5°C for a period of approximately 24 hours. Total resistance shall again be measured as specified in 4.6.2.1. Resistors shall be examined for evidence of mechanical damage.

4.6.21 High temperature exposure (see 3.26).

4.6.21.1 Mounting. Resistors shall be mounted in such a manner as to allow electrical connections to be made to the terminals.

4.6.21.2 Procedure. Total resistance and setting stability shall be measured as specified in 4.6.2.1 and 4.6.11.1, respectively. The resistors shall then be exposed to an ambient temperature of 135°C +5°C, -0°C for a period of 250 hours ±8 hours. Not less than two hours after the end of the exposure period, setting stability and total resistance shall be measured as specified in 4.6.11.1 and 4.6.2.1, respectively; torque shall be measured as specified in 4.6.10.1, except that it shall be determined during the movement of the contact arm from the position for setting stability to the position for total resistance; dielectric withstanding voltage (at atmospheric pressure), independent linearity tolerance and insulation resistance shall be measured as specified in 4.6.7.1, 4.6.8, and 4.6.9, respectively,. Resistors shall then be examined for evidence of mechanical damage.

4.6.22 Rotational life (see 3.27).

4.6.22.1 Mounting. Resistors shall be mounted as specified in 4.6.19a. Care should be taken to insure that side thrust is minimized by the proper alignment of the resistor shafts with the drive shafts. The resistors shall be ganged in pairs and each pair shall be connected in series as shown on figure 4, so that a nominally constant current flows through the resistor, irrespective of the contact arm position during the cycling of the shafts. The shafts shall be so connected mechanically that they will turn simultaneously in the same direction. When performing this test on locking-bushing types, the locking nut shall be removed.

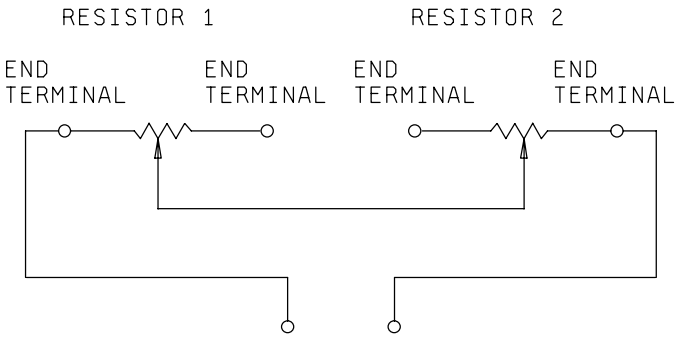

FIGURE 4. Rotational life test circuit.

Downloaded from http://www.everyspec.com

4.6.22.2 Rotation. Total resistance shall be measured as specified in 4.6.2.1. A dc potential equivalent to that required to dissipate rated wattage across the entire resistive element of resistors having the same nominal total resistance as those under test shall be applied as shown on figure 4. Resistors shafts shall then be continuously cycled through not less than 98 percent of the total mechanical rotation, at a rate of 10 cycles ±2 cycles per minute for not less than 4,000 cycles per day for a total of 25,000 cycles (100,000 cycles for units of 2 inches or over). Locking bushing types shall be rotated for a total of 500 cycles. The contact arm shall oscillate over the end of the element to which connection is made and proper contact of the contact-arm with the winding shall be maintained. The total resistance of resistors shall be ascertained at the end of every 5,000 cycles for all resistors except the locking bushing types and 500 cycles for the locking bushing type. Following the test, the independent linearity tolerance shall be determined as specified in 4.6.8.

4.6.22.3 Conformance inspection. At the option of the supplier, the sample units may be rotated at a rate of 8 cycles to 30 cycles per minute.

4.6.23 Terminal strength (see 3.28). Resistors shall be tested in accordance with method 211 of MIL-STD-202. The following details and exceptions shall apply:

a. Test condition letter: A. Applied force: Two pounds applied gradually to each terminal one at a time, in a direction parallel to the major axis of the terminal.

b. Examination after test: Resistors shall be tested for electrical continuity and examined for evidence of mechanical damage.

5. PACKAGING

5.1 Packaging. For acquisition purposes, the packaging requirements shall be as specified in the contract or order (see 6.2). When actual packaging of materiel is to be performed by DoD personnel, these personnel need to contact the responsible packaging activity to ascertain requisite packaging requirements. Packaging requirements are maintained by the Inventory Control Point's packaging activity within the Military Department or Defense Agency, or within the Military Department's System Command. Packaging data retrieval is available from the managing Military Department's or Defense Agency's automated packaging files, CD-ROM products, or by contacting the responsible packaging activity.

6. NOTES

(This section contains information of a general or explanatory nature that may be helpful, but is not mandatory.)

6.1 Intended use. The resistors covered by this specification are military unique due to the fact that these devices must be able to operate satisfactorily in military systems under the following demanding conditions: 20 G's of high frequency vibration, 100 G's of shock (specified pulse), thermal shock (with no more than 1 percent deviation in initial resistance), low temperature coefficient of resistance, and salt corrosion. In addition, these military requirements are verified under a qualification system. Commercial components are not designed to withstand these military environmental conditions.

6.2 Acquisition requirements. Acquisition documents must specify the following:

a. Title, number, and date of the specification, the applicable associated specification, and the complete PIN (see 1.2.1 and 3.1).

b. Issue of DoDISS to be cited in the solicitation, and if required, the specific issue of individual documents referenced (see 2.1).

c. Packaging requirements (see 5.1).

6.2.1 PIN. This specification requires a PIN that describes technology and appropriate references to associated documents (see 1.2.1 and 3.1).

Downloaded from http://www.everyspec.com

6.2.2 Indirect shipments. The packaging specified in section 5 applies only to direct purchases by or direct shipment to the Government and are not intended to apply to contracts or orders between the supplier and prime contractor.

6.3 Qualification. With respect to products requiring qualification, awards are made only for products which are, at the time of award of contract, qualified for inclusion in Qualified Products List whether or not such products have actually been so listed by that date. The attention of the contractors is called to these requirements, and manufacturers are urged to arrange to have the products that they propose to offer to the Federal Government tested for qualification in order that they may be eligible to be awarded contracts or orders for the products covered by this specification. Information pertaining to qualification of products may be obtained from Defense Supply Center, Columbus, ATTN: DSCC/VQP, 3990 East Broad Street, Columbus, OH 43213.

6.4 Sequence for examinations, measurements, and tests. Sequence of examinations, measurements, and tests should be in accordance with table XII, and are indicated by the following symbols:

B = Before test.
D = During test.
A = After test.

6.5 High resistances and voltages. Where voltages higher than 250 volts rms are present between the resistor circuit and grounded surface on which the resistor is mounted, or where the dc resistance is so high that the insulation resistance to ground is an important factor, secondary insulation to with stand the conditions should be provided between the resistor and mounting or between the mounting and ground.

6.6 Resistance-temperature characteristic. Consideration should be given to temperature rise and ambient temperature of resistors under operation, in order to allow for the change in resistance due to resistance-temperature characteristic. Resistance tolerance may easily be exceeded unless care is exercised.

6.7 Supersession data. This specification supersedes temperature characteristic symbol 1 and symbol 2 and resistance characteristic A and characteristic C of MIL-R-27208/6(USAF) dated 20 October 1959.

6.8 Reduction of power rating. When only a portion of the resistance element is engaged, the wattage rating is reduced in approximately the same proportion as the resistance.

6.9 Power rating. Resistors are rated at 85°C ambient temperature when mounted on metal plate area (equivalent to the specified test chassis (see 4.6.19a). When resistors are mounted on other than metal plates, the free air rating are approximately 50 percent of the rated power (see 3.1).

6.10 Subject term (key word) listing.

Contact resistance
Angular position
Single turn
Resistance element

Downloaded from http://www.everyspec.com

TABLE XII. Sequence for examinations, measurements, and tests.

Exam nat on or test	Tota res stance	Peak no se	D e ectr c w thstand ng vo tage (at atmospher c pressure)	Insu at on res stance	Torque	Res stance measured between term na s 1,3	Sett ng stab ty	Indepen-dent near ty to erance
Group I								
V sua and mechan ca exam nat on	A							
Actua effect ve-e ectr ca trave		A	A Atmospher c and Barometr c	A	A			
Abso ute m n mum res stance								
End res stance								
Cont nu ty	B, A						B, A	A
Therma shock								
Group II								
Res stance-temperature character st c								
Mo sture res stance	B, A	A		A				
Group III								
Acce erat on	B, A						B, A	A
Shock, spec f ed pu se	B, A						B, A	
V brat on, h gh frequency	B, A	A			A		B, A	A
Sa t spray (corros on)								
Group IV								
Res stance to so der ng heat	B, A							
L fe	B, A	A	A	A	A	B, D, A	B, A	A
Group V								
Low temperature operat on	B, A				B, A		B, A	
H gh temperature exposure	B, A	A	A	A	A		B, A	A
Group VI								
Rotat ona fe	B, A	A						A
Term na strength								

6.11 Changes from previous issue. Marginal notations are not used in this revision to identify changes with respect to the previous issue due to the extensiveness of the changes.

Downloaded from http://www.everyspec.com

APPENDIX

PROCEDURE FOR QUALIFICATION INSPECTION

10. SCOPE

10.1 Scope. This appendix details the procedure for submission of samples for qualification inspection of resistors covered by this specification. The procedure for extending qualification of the required sample to other resistors covered by this specification is also outlined herein.

20. APPLICABLE DOCUMENTS

This section is not applicable to this appendix.

30. SUBMISSION

30.1 Sample. A sample consisting of 31 enclosed sample units of the standard-bushing type and two unenclosed sample units each of the highest and lowest resistance values in each style for which qualification is sought shall be submitted. To receive qualification of locking-bushing-type resistors when standard-bushing type have been submitted, an additional 13 sample units of the locking-bushing-type resistors, of the highest values, shall be submitted. One of the 31 and one of the 13 sample units, as applicable, shall be used in case of failure in group I of table VI.

40. EXTENT OF QUALIFICATION

40.1 Qualification. The resistance range included in the qualification of any one resistor style is between the highest and lowest resistance values inspected for standard-bushing types. The resistance range for the locking-bushing type is that inspected for the standard-bushing types.

Downloaded from http://www.everyspec.com

Custodians:
Army - CR
Navy - EC
Air Force - 85

Review activities:
Army - AR, AT, AV, CR4, MI
Navy - AS, CG, MC, OS
Air Force - 17, 99

Preparing activity:
DLA - CC

(Project 5905-1549)

Downloaded from http://www.everyspec.com

STANDARDIZATION DOCUMENT IMPROVEMENT PROPOSAL

INSTRUCTIONS

1. The preparing activity must complete blocks 1, 2, 3, and 8. In block 1, both the document number and revision letter should be given.

2. The submitter of this form must complete blocks 4, 5, 6, and 7.

3. The preparing activity must provide a reply within 30 days from receipt of the form.

NOTE: This form may not be used to request copies of documents, nor to request waivers, or clarification of requirements on current contracts. Comments submitted on this form do not constitute or imply authorization to waive any portion of the referenced document(s) or to amend contractual requirements.

I RECOMMEND A CHANGE:	**1. DOCUMENT NUMBER** MIL-PRF-39002A	**2. DOCUMENT DATE (YYMMDD)** 990201

DOCUMENT TITLE **RESISTORS, VARIABLE, WIREWOUND, SEMI-PRECISION, GENERAL SPECIFICATION FOR**

4. NATURE OF CHANGE *(Identify paragraph number and include proposed rewrite, if possible. Attach extra sheets as needed.)*

5. REASON FOR RECOMMENDATION

6. SUBMITTER

a. NAME *(Last, First, Middle Initial)*	b. ORGANIZATION	
c. ADDRESS *(Include Zip Code)*	d. TELEPHONE (Include Area Code) (1) Commercial (2) AUTOVON *(if applicable)*	**7.DATE SUBMITTED** (YYMMDD)

8. PREPARING ACTIVITY

a. NAME DEFENSE SUPPLY CENTER, COLUMBUS	b. TELEPHONE *Include Area Code)* (1) Commercial (2) AUTOVON 85-0553
c. ADDRESS *(Include Zip Code)Commander* ATTN: DSCC-VAM 3990 EAST BROAD STREET COLUMBUS, OH 43212-1199	**IF YOU DO NOT RECEIVE A REPLY WITHIN 45 DAYS, CONTACT:** DEFENSE QUALITY AND STANDARDIZATION OFFICE 5203 Leesburg Pike, Suite 1403, Falls Church, VA 22401-3466 Telephone (703) 756-2340 AUTOVON 289-2340

Source: https://assist.dla.mil -- Downloaded: 2015-12-04T14:20Z
Check the source to verify that this is the current version before use.