INCH-POUND

MIL-PRF-32615
27 September 2018

PERFORMANCE SPECIFICATION

CYLINDERS, COMPRESSED GAS, SEAMLESS, SHATTERPROOF, HIGH PRESSURE, COMPOSITE-REINFORCED

This specification is approved for use by all Departments and Agencies of the Department of Defense.

1. SCOPE

1.1 Scope. This specification provides the performance requirements for non-shatterable, composite-reinforced cylinders of seamless construction for the containment, storage, and transportation of high-pressure compressed gases. Cylinders under this specification consist of one seamless internal liner component that serves as the primary gas container and is externally reinforced by composite fibers. Requirements herein are intended for cylinders that are to be used in aircraft mounted, but not man-mounted, applications.

2. APPLICABLE DOCUMENTS

2.1 General. The documents listed in this section are specified in sections 3 and 4 of this specification. This section does not include documents cited in other sections of this specification or recommended for additional information or as examples. While every effort has been made to ensure the completeness of this list, document users are cautioned that they must meet all specified requirements of documents cited in sections 3 and 4 of this specification, whether or not they are listed.

2.2 Government documents.

2.2.1 Specifications and standards. The following specifications and standards form a part of this document to the extent specified herein. Unless otherwise specified, the issues of these documents are those cited in the solicitation or contract.

INTERNATIONAL STANDARDIZATION AGREEMENT

ISO 7866 Gas Cylinders – Refillable Seamless Aluminum Alloy, Design, Construction and Testing, Technical Corrigendum, Second Edition

Comments, suggestions, or questions on this document should be addressed to: Commander, Naval Air Warfare Center Aircraft Division Lakehurst (Code 4.1.2.2), Route 547, Mail Stop 120-3, Joint Base MDL, NJ 08733-5100 or emailed to michael.sikora@navy.mil. Since contact information can change, you may want to verify the currency of this address information using the ASSIST Online database at https://assist.dla.mil.

AMSC N/A FSC 1660

FEDERAL SPECIFICATION

BB-A-1034 Compressed Air, Breathing (Inactive for new design)

COMMERCIAL ITEM DESCRIPTION

A-A-59503 Nitrogen, Technical

DEPARTMENT OF DEFENSE SPECIFICATIONS

MIL-PRF-25567	Leak Detection Compound, Oxygen Systems
MIL-PRF-27210	Oxygen, Aviator's Breathing, Liquid and Gas

DEPARTMENT OF DEFENSE STANDARDS

MIL-STD-101	Color Code for Pipelines and for Compressed Gas Cylinders
MIL-STD-130	Identification Marking of U.S. Military Property
MS26545	Cylinders, Steel, Compressed Gas, Non-Shatterable, Seamless, 1800 PSI and 2100 PSI (Inactive for new design)

(Copies of these documents are available online at http://quicksearch.dla.mil.)

2.2.2 Other Government documents, drawings, and publications. The following other Government documents, drawings, and publications form a part of this document to the extent specified herein. Unless otherwise specified, the issues of these documents are those cited in the solicitation or contract.

CODE OF FEDERAL REGULATIONS

DEPARTMENT OF TRANSPORTATION

49 CFR 173.301	General Requirements for Shipment of Compressed Gases in Cylinders and Spherical Pressure Vessels

(Copies of this document are available online at https://www.gpo.gov/fdsys/browse/collectionCfr.action?collectionCode=CFR.)

MARSHALL SPACE FLIGHT CENTER PUBLICATION

MSFC-STD-3029	Guidelines For The Selection of Metallic Materials For Stress Corrosion Cracking Resistance in Sodium Chloride Environments

(Copies of this document are available at https://www.standards.nasa.gov.)

2.3 Non-Government publications. The following documents form a part of this document to the extent specified herein. Unless otherwise specified, the issues of these documents are those cited in the solicitation or contract.

AEROSPACE INDUSTRIES ASSOCIATION (AIA)

NAS847	Caps and Plugs, Protective, Dust and Moisture Seal (DoD adopted)

(Copies of this document are available online at https://www.aia-aerospace.org/standards/.)

COMPRESSED GAS ASSOCIATION (CGA)

Pamphlet C-1	Methods for Hydrostatic Testing of Compressed Gas Cylinders

(Copies of this document are available online at www.cganet.com.)

SOCIETY OF AUTOMOTIVE ENGINEERS (SAE) INTERNATIONAL

SAE ARP1176	Oxygen System and Component Cleaning
SAE AMS-STD-595	Colors Used in Government Procurement

(Copies of these documents are available online at www.sae.org.)

AMERICAN SOCIETY OF MECHANICAL ENGINEERS (ASME)

ASME Y14.35	Revision of Engineering Drawings and Associated Documents

(Copies of this document are available online at www.asme.org.)

2.4 Order of precedence. Unless otherwise noted herein or in the contract, in the event of a conflict between the text of this document and the references cited herein, the text of this document takes precedence. Nothing in this document, however, supersedes applicable laws and regulations, unless a specific exemption has been obtained.

3. REQUIREMENTS

3.1 First article inspection. When specified (see 4.2), a sample shall be subjected to first article inspection in accordance with 4.2.1.

3.2 Design and construction. The cylinders furnished under this specification shall specify stress levels, material properties, manufacturing controls, identification/labeling requirements. Refer to Section 2 for reference specifications. Design deviations shall only be made by the contracting agency. Detailed design analysis shall be made to assess the effect of such deviations on the design. Performance shall be verified by first article testing (see 4.2.1).

3.3 Materials. The materials used in all parts of the cylinders shall be in accordance with the applicable material specifications. Material shall be subject to verification as specified in Section 4.

3.4 Wire wrapping. Wire wrapping shall not be used.

3.5 Neck. Shrink rings or supporting collars shall not be used for strengthening the neck of the cylinder.

3.6 Closure. Unless otherwise specified, the threaded port of each cylinder shall be closed by a metal, removable, threaded plug or cap conforming to NAS847 to protect the threads and prevent entrance of foreign matter or moisture.

3.7 Performance.

3.7.1 Cleanliness (oxygen cylinders). When tested as specified in 4.6, the residue from the solvent used for the rinse shall be in accordance with cleanliness level code ARP1176-3-300.

3.7.2 Particulate. When tested as specified in 4.6.3, the solvent rinse shall not exceed the allowable particle sizes and counts specified in SAE ARP1176, Table 2.

3.7.3 Cleaning fluid. When tested as specified in 4.6.4, there shall be no evidence of cleaning fluid residue.

3.7.4 Volumetric expansion.

3.7.4.1 Load bearing metallic-lined cylinders. The cylinder shall not have a permanent volumetric expansion greater than 5 percent of the total volumetric expansion when tested to the design proof pressure as specified (see 4.8).

3.7.4.2 Non-load bearing/non-metallic-lined cylinders. The cylinder shall not have an elastic expansion greater than 110 percent of the average elastic expansion for the manufactured lot when tested to the design proof pressure as specified (see 4.8).

3.7.5 Burst pressure. The cylinder shall not burst at a pressure less than the required minimum as specified on the manufacturing drawing or in accordance with 49 CFR 173.301 or approved DOT special permit (see 4.9).

3.7.6 Cyclic endurance. The cylinder shall continue to hold pressure during the cyclic endurance portion of the test as specified (see 4.10).

3.7.7 Fragmentation resistance (non-shatterability). The fragment resistance or non-shatterability (shatterproof) characteristics of the cylinder shall be determined by the performance of the specified gunfire test (see 4.11). Cylinders meeting these requirements shall be acceptable as non-shatterable and shall be labeled "NON-SHAT".

3.7.7.1 Procedure I. When tested as specified in 4.11.1, the cylinders shall remain in one piece following the impact event. A cylinder shall be considered as having failed this test if upon inspection it is discovered that the cylinder breaks/separates into two or more pieces. In addition, pieces smaller than 2 inches in diameter coming from the areas (centering on the perforation and 4 inches in diameter) on the cylinder adjacent to the point of entry and exit of the projectile will not be counted toward the two-piece requirement. A passing result is typically characterized by clean entry and exit hole. In some cases an exit hole is not observed. Composite overwrapping may become separated from the cylinder. Refer to Appendix A for examples of PASS/FAIL criteria.

3.7.7.2 Procedure II. When tested as specified in 4.11.2, the cylinders shall be allowed to separate into two pieces for oxygen or air charged cylinders and four pieces for carbon dioxide charged cylinders. The projected area of any piece shall be not less than 2.0 square inches. The cylinder shall exhibit no evidence of shattering into small irregular pieces. The composite wrapping may come loose from the cylinder.

3.7.8 Material properties. The cylinder's seamless liner material and composite reinforcement shall meet all the required material properties as specified (see 3.3).

3.7.9 Liner material stress corrosion cracking resistance (metallic liners only). The liner alloy shall be acceptable for the manufacture of composite cylinders if none of the test samples subjected to stress develops any cracks visible to the naked eye, or visible at low-magnification (X10 to X30), at the end of the 30-day test period (see 4.12).

Liner materials selected from the list of alloys with high resistance to stress corrosion cracking in sodium chloride environments shown in Tables 1-A through 1-E of MSFC-STD-3029 shall not require corrosion resistance testing. If selected liner material is not listed in Tables 1-A through 1-E, corrosion resistance testing is required.

3.7.10 Liner material inter-granular corrosion resistance (metallic liners only). The liner alloy shall be acceptable for the manufacture of composite cylinders if no inter-granular corrosion is detected when inspected under magnification.

a) For alloys with an equiaxed crystal structure, the depth of corrosion shall not exceed the greater of the following two values:

1. Three grains in the direction perpendicular to the face examined
2. 2 mm

In no case shall the depth be greater than 0.3 mm. However, it is permissible for these values to be greater provided that they are not greater in more than four fields of examination at X300 magnification (see 4.12).

b) For alloys with a crystal structure oriented in one direction through cold working, the depth of corrosion into each of the two faces that make up the internal and external surfaces of the cylinder shall be not greater than 0.1 mm (see 4.12).

Liner materials selected from the list of alloys with high resistance to stress corrosion cracking in sodium chloride environments shown in Tables 1-A through 1-E of MSFC-STD-3029 shall not require corrosion resistance testing. If selected liner material is not listed in Tables 1-A through 1-E, corrosion resistance testing is required.

3.7.11 Leakage. The cylinder shall be tested to verify no evidence of leakage as specified (see 4.7).

3.8 Weight, dimensions, and drawing requirements. The weight and physical dimensions of the cylinders shall be not greater than the values specified by the manufacturer's component drawing and meet all drawing requirements specified in MS26545.

3.9 Visual examination. When visually examined, the cylinders shall conform to the requirements of this specification as specified in Table I. No observations that will negatively affect product function or product identification shall be accepted. Defects in individual cylinders that cannot be corrected will be cause for rejection.

TABLE I. Visual examination requirements.

Visual Inspection Defects 1/	Sample Size
Port outlet configuration	100% of Lot
Incorrect or defective threads	
Incorrect, incomplete, or faulty finish	
Incorrect or incomplete marking	
Loose particles inside the cylinder	
Existence of any foreign material, solid or liquid	

1/ Folds in the spun sections of cylinders, such as those caused by changes in temperature during the spinning process, shall be accepted. There shall be no folds in the cylindrical section of the cylinder wall.

3.10 Exterior finish. The color of the cylinder shall be in accordance with SAE AMS-STD-595. The paint or coating shall not crack, chip, or scale, as applicable, during normal service life or under extreme environmental conditions.

3.10.1 Humidity. The exterior finish when exposed to humidity shall not show evidence of blistering, wrinkling or loss of adhesion.

3.10.2 Specific gas applications. All cylinders that have been designated for a specific gas application shall be color coded and identified in accordance with MIL-STD-101.

3.11 Intended gas service. The intended gas service shall be selected based on the allowable gaseous media requirement of the individual cylinder. Unless otherwise specified, the gas used in testing the cylinders shall be oxygen conforming to MIL-PRF-27210, Type I, or nitrogen conforming to A-A-59503, Type I, Class I, Grade B, or air conforming to BB-A-1034.

3.12 Interchangeability. All parts having the same manufacturer's part number shall be directly and completely interchangeable with each other with respect to installation and

performance. Changes in manufacturer's part numbers shall be governed by the drawing number requirements of ASME Y14.35.

3.13 Workmanship. The cylinders shall be uniform in quality and shall be free of irregularities or defects that could adversely affect safety, performance, reliability, or durability. The cylinders shall be free of oil, grease, fuel, water, dust, dirt, or any other foreign matter.

4. VERIFICATION

4.1 Lot definition. A lot shall consist of not greater than 200 cylinders manufactured, tested, and offered for delivery at the same time. Cylinders used for destructive testing do not count toward this maximum number of units.

4.2 Classification of inspection. The inspection requirements specified herein are classified as follows:

a. First article inspection (see 4.2.1).
b. Conformance inspection (see 4.2.2).

4.2.1 First article inspection. First article inspection shall consist of the examinations and tests specified in Table II.

TABLE II. First article inspections.

Inspection/Test	Requirement paragraph(s)	Test method paragraph(s)	Sample size
Cleanliness (oxygen cylinders)	3.7	4.6	All units
Volumetric expansion	3.7.4.1 3.7.4.2	4.8	All units
Burst pressure	3.7.5	4.9	3 units
Cyclic Endurance	3.7.6	4.10	4 units
Fragmentation resistance	3.7.7.1 3.7.7.2	4.11.1 4.11.2	3 units
Liner Stress Corrosion Cracking	3.7.9	4.12	1 liner
Liner Intergranular Corrosion	3.7.10	4.12.1	1 liner
Leak Test	3.7.11	4.7	All units
Dimensional examination	3.8	4.13	All units

4.2.1.1 First article samples. First article samples shall consist of the following:

a. Ten cylinder minimum lot of parts of each design type (part number) for which first article testing is being conducted.
b. One controlled set of manufacturer's drawings.
c. A statement of certification that the cylinders' design meets the specification requirements (see 3.2).

4.2.2 Conformance inspection. Conformance inspection shall consist of the examinations and tests specified in Table III for every lot of parts produced. Minimum sampling and inspection levels and acceptance criteria shall conform to specification requirements.

TABLE III. Lot conformance inspections.

Inspection/Test	Requirement paragraph(s)	Sample size
Cleanliness (oxygen cylinders)	3.7.1, 3.7.2, 3.7.3	1 unit
Permanent volumetric expansion	3.7.4	All units
Burst pressure[1/]	3.7.5	1 unit
Cyclic endurance[1/]	3.7.6	1 unit
Dimensional and visual examination	3.8, 3.9	All units
Leak testing	3.7.11	All units

1/ This is a destructive test. If desired, the cylinder used to perform the cyclic endurance test may also be used to perform the burst pressure test.

4.2.2.1 Sampling.

4.2.2.1.1 Inspection lot. An inspection lot size shall be expressed in units of one cylinder of the same size, made under the same conditions and from the same materials and components. The sample unit shall be one cylinder when specified.

4.2.2.1.2 Sampling for tests and examinations of cylinders. The sample size, acceptance requirements, applicable examinations required for the cylinders shall be as specified in Table II for every production lot.

4.3 Temperature and pressure. Unless otherwise specified, tests shall be conducted at local ambient temperature and barometric pressure. Test instruments shall be calibrated or adjusted according to their required usage in conducting individual tests. The temperature and barometric pressure shall be recorded at the time of inspection and when required, the test results shall be corrected to normal temperature and pressure (NTP) conditions. NTP conditions are 70 °F (21.1 °C) and 29.92 inches of mercury (101.3 kPa).

4.4 Wire wrapping. Wire wrapping shall not be used.

4.5 Inspection methods.

4.5.1 Visual examination and dimensional check.

4.5.1.1 Visual examination. Every cylinder shall be visually examined for conformance to the requirements of 3.9.

4.5.1.2 Dimensional check. The cylinders shall be dimensionally checked for conformance to the requirements of 3.8.

4.6 Cleanliness (oxygen cylinders). The cleanliness test shall consist of the non-volatile residue examination in accordance with the following and SAE ARP1176 (see 3.7).

4.6.1 Non-volatile residue test (oil and hydrocarbon residue). Place a clean plug, cork, or rubber stopper per NAS847 in the cylinder neck. Clean the area around it thoroughly with a halide type solvent, isopropanol, or other approved cleaning fluid and wipe dry with a clean cloth. For cylinders with less than three square feet of internal surface area, remove the plug and pour in 300 milliliters (mL) of the solvent. For larger cylinders, add an additional 100 mL for each square foot of internal area over 3 square feet. Replace the plug and place the cylinder on its side. Roll or rotate through 360 degrees on a level surface or level rolling/tumbling machine for a minimum of 10 minutes to ensure all the internal surfaces have been thoroughly wetted with solvent. Remove the solvent extract into a clean beaker. Any undissolved liquid floating on the surface of the solvent would indicate the presence of water or glycerin. The solvent extract shall be analyzed for hydrocarbons by the evaporation method.

4.6.2 Evaporation method. Evaporate the extract to dryness at slightly below the boiling point and finish the drying in an oven at 221 ºF (105 ºC) ±1.8 ºF (1 ºC) for 15 minutes. Cool, weigh, and report as milligrams of extracted oil. All traces of solvent shall be removed from the cylinder upon completion of this test. Nonconformance to 3.7 shall constitute failure of this test.

4.6.3 Particulate test. Upon successful completion of the test specified in 3.7.2, examine the remaining one half of the solvent used for the rinse of particles. To determine the particle content, filter the solvent through a 1.2 micro Millipore membrane filter and inspect the filter surface for conformance to the requirements of 3.7.2. Upon successful completion of this test, the cylinders shall be subjected to the remaining tests specified in 3.7.

4.6.4 Cleaning fluid test. Upon successful completion of the test specified in 3.7, the cylinders shall be tested to detect any solvent residue. A halogen or halide detector, having a minimum sensitivity of not less than 3 x 10-4 standard cubic centimeters per second, shall be utilized for this test if a halide type solvent is used. The cylinders shall meet the requirements of 3.7.

4.7 Leakage. The cylinder shall be tested to verify no evidence of leakage. The cylinder shall be charged to its design (class requirement) rated pressure, with a +2 percent tolerance, and tested with a MIL-PRF-25567 class leak detection compound, or by other suitable method, as applicable.

4.8 Volumetric expansion. Volumetric expansion of the cylinder shall be determined as specified using the water jacket method in accordance with Pamphlet C-1 of the Compressed Gas Association. The cylinder shall meet the requirements specified in 3.7.4.

4.9 Burst pressure. Unless otherwise specified, the cylinders shall be hydrostatically pressurized at a rate that is not greater than an average of 12,000 pounds per square inch (psi) per minute to the minimum design burst pressure as specified in 3.7.5. The cylinders shall be held at pressure for a minimum of 60 seconds. Immediately following the pressure hold, the cylinder internal pressure shall be increased to failure and the maximum achieved pressure recorded.

4.10 Cyclic endurance.

4.10.1 Pressure testing. Unless otherwise specified, the testing shall consist of pressurizing the cylinder between a maximum lower pressure 10 percent of service pressure and service pressure at a rate not to exceed 10 cycles per minute. The minimum dwell time in the pressure range between 90 percent and 100 percent of the service pressure shall be not less than 1.2 seconds. Each cylinder shall be subjected to a minimum of 10,000 cycles. Following the cycling test to service pressure, each cylinder shall be subjected to a minimum of 30 pressurization cycles by pressurizing between approximately zero psig and the minimum required test pressure. The cylinder shall meet the requirements of 3.7.6.

4.10.2 Life cycle testing. Cylinders with a defined cycle life less than 2500 pressure reversal cycles shall be subjected to a minimum of 4X the defined life cycles. Following the 4X life cycle test to service pressure, each cylinder shall be subjected to a minimum of 8 pressurization cycles to the minimum required test pressure. The cylinder shall meet the requirements of 3.7.6.

For cylinder designs undergoing the initial qualification verification, two (2) cylinders shall be subjected to the applicable cyclic endurance test.

4.11 Fragmentation resistance. Oxygen shall be the charging gas for oxygen cylinders, carbon dioxide for charging carbon dioxide cylinders, and air for charging cylinders of other usages (see 3.7.7).

4.11.1 Procedure I. Cylinders greater than 2.5 inches in diameter shall be subjected to gunfire under the following conditions:

a. The cylinder shall be charged to rated service pressure at gun range ambient air temperature.
b. The cylinder shall be supported but not constrained.
c. The ammunition shall be 0.50 caliber M-2, armor-piercing.
d. The range shall be 50 yards (45.7 meters) maximum.
e. The various cylinders taken for test shall be tested, each progressively, in a different position. The cylinder positions shall be as follows:

(1) With the longitudinal axis of the cylinder normal to the line of fire. Projectile shall target the cylinder along the center axis and mid-center sidewall of the cylinder.

(2) With the longitudinal axis of the cylinder 45 degrees (0.785 rad) from normal toward the gun position. Projectile shall target the cylinder along the center axis and mid-center sidewall of the cylinder.

(3) With the longitudinal axis of the cylinder parallel to the line of fire with inlet port face away from the gun position. Projectile shall target the center of the cylinder dome.

f. All shots shall be tumbled. A suggested method for projectile tumbling is shown on Figure 1.

g. The tumbled projectile shall have a minimum velocity of 2,600 feet/sec (792 meters/sec) at the point of impact with the cylinder.

h. The minimum size entry hole made by the tumbled projectile shall be one-half inch by one and one-half inch (13mm by 38mm).

i. Verify that the projectile trajectory and tumble are satisfactory. This may be determined by the location and visual appearance of a hole made by the passage of the projectile through vertically suspended sheets of paper at the target area. The cylinders shall meet the requirements specified in 3.7.7.

j. Projectile impacts observed to be outside of the target impact locations causing a tear in the cylinder due to the projectile path is considered an anomalous test. Anomalous tests may be repeated.

4.11.2 Procedure II. Cylinders 2.5 inches or less in diameter shall be subjected to gunfire under the following conditions.

a. The cylinder shall be charged to its rated service pressure at gun range ambient air temperature.
b. The cylinder may be supported but not constrained.
c. The ammunition shall be 0.30 caliber armor piercing, with a muzzle velocity of 2800 ±100 feet/sec (853 ±30 meters/sec).
d. The range shall be approximately 20 yards (18.3m).
e. Shots shall not be tumbled.
f. The various units taken for tests shall be positioned as indicated in 4.11.1e.

The cylinders shall meet the requirements specified in 3.7.7.

4.12 Liner material stress corrosion cracking (metallic liners only). Liner material shall be evaluated for stress corrosion cracking susceptibility at the operating pressure maximum expected liner stresses as specified in ISO 7866 Annex A. Material samples shall be extracted from center wall section and subjected to the 30-day test. The liner material shall meet the requirements specified in 3.7.9.

4.12.1 Liner material inter-granular corrosion (metallic liners only). Liner material shall be tested for inter-crystalline corrosion as specified in ISO 7866 Annex A. Material samples shall be extracted from the closed domes (both domes) and the center wall section. The liner material shall meet the requirements specified in 3.7.10.

4.13 Weight and dimensional inspection. The cylinders shall be dimensionally inspected using industry best practices and calibrated inspection instruments to the requirements of 3.8.

4.14 Marking. Cylinder identification markings shall be in accordance with MIL-STD-130. Identification marking shall have at a minimum, part number, serial number, manufacturer's mark, service pressure, date of volumetric expansion test. Cylinders qualified under this specification shall include the additional marking: "NON-SHAT".

5. PACKAGING

5.1 Packaging. For acquisition purposes, the packaging requirements shall be as specified in the contract or order. When actual packaging of materiel is to be performed by DoD or in-house contractor personnel, these personnel need to contact the responsible packaging activity to ascertain packaging requirements. Packaging requirements are maintained by the Inventory Control Point's packaging activities within the Military Service or Defense Agency, or within the military service's systems commands. Packaging data retrieval is available from the managing Military Department's or Defense Agency's automated packaging files, CD-ROM products, or by contacting the responsible packaging activity.

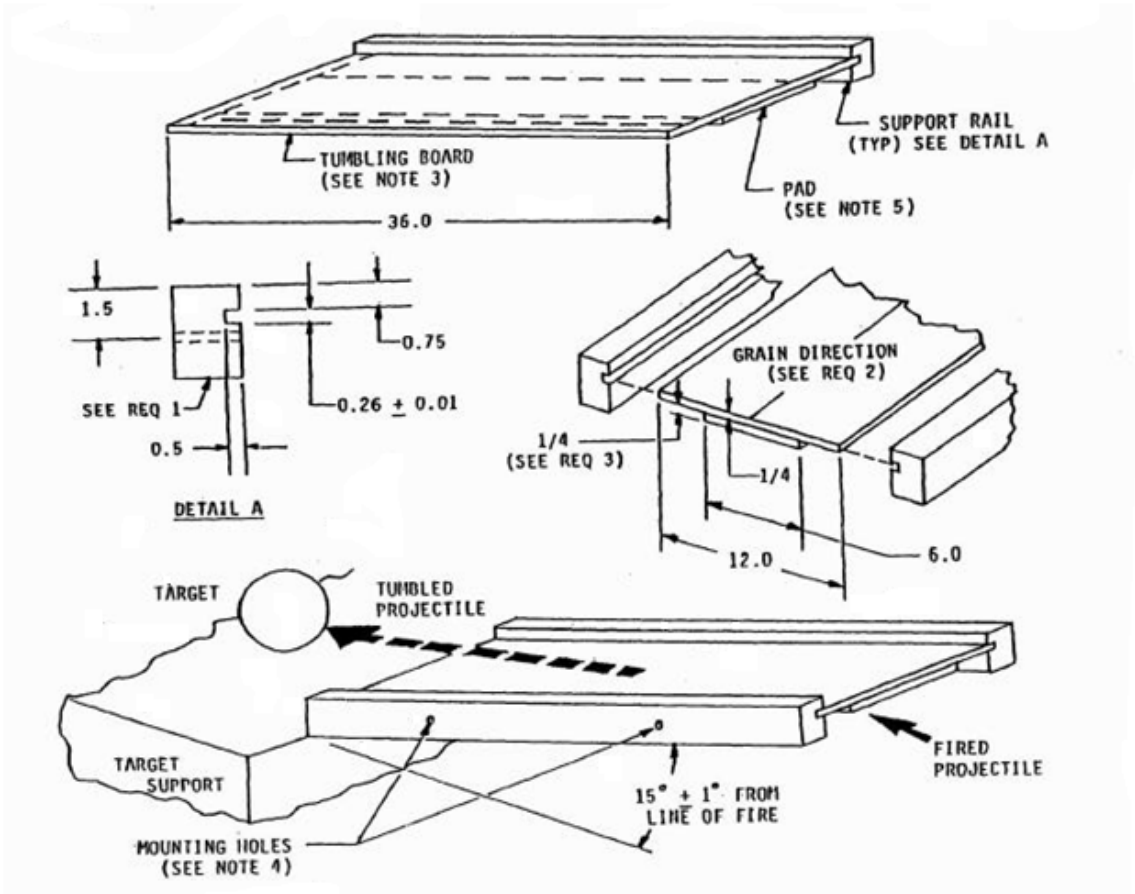

REQUIREMENTS:
1. Lumber, 2´ x 3´ - finish size.
2. Board, plywood-grade, A-A, exterior type, 3-ply.
3. Sheet, rubber-styrene-butadiene (SBR), 55 +5 durometer (Shore A).

Notes:
1. Dimensions in inches.
2. Tolerance: decimals +0.1, fractions +1/64.
3. Tumbling board may be moved in the support rails for repeated firings.
4. Mounting holes method used to support tumbling board is optional; however, the board shall be rigidly mounted.
5. Pad shall be cemented to entire length of tumbling board using a commercial contact cement.

* Other tumble methods are allowed as long as the projectile impact requirements of 3.7.7 are maintained.

FIGURE 1. Suggested tumble method.

6. NOTES

(This section contains information of a general or explanatory nature that may be helpful, but is not mandatory.)

6.1 Intended use. The cylinders covered by this specification are intended for use in storing compressed gas, such as air, aviator's breathing oxygen and liquefied carbon dioxide. These cylinders must pass a military unique fragmentation test in accordance with this specification and thus considered military unique.

6.2 Acquisition requirements. Acquisition documents should specify the following:

a. Title, number, and date of this specification.
b. Applicable part number.
c. Cylinders subjected to destructive tests (see table II) should not be shipped or considered part of the contract or order.
d. Packaging (see 5.1).

6.3 Subject term (key word) listing.

Air, breathing
Carbon dioxide
Oxygen

APPENDIX A. TEST EXAMPLES (SUCCESSFUL AND UNSUCCESSFUL)

A.1 SCOPE. This appendix provides examples of PASS/FAIL criteria for the fragment resistance or non-shatterability (shatterproof) test outlined in 3.7.7.1. This Appendix is not a mandatory part of the specification. The information contained herein is intended for guidance only.

A.2 APPLICABLE DOCUMENTS. N/A

SUCCESSFUL TEST EXAMPLES

FIGURE A-1. Projectile entry locations.

FIGURE A-2. Successful test examples.

Notes:

1) Upon inspection, it is clearly observed the cylinder remained in one piece.
2) No sections/pieces of liner greater than 2 inches are observed to be missing.
3) Outer composite layers became detached.
4) Clear entry and exit holes observed. Exit hole is not always observed; this is acceptable.

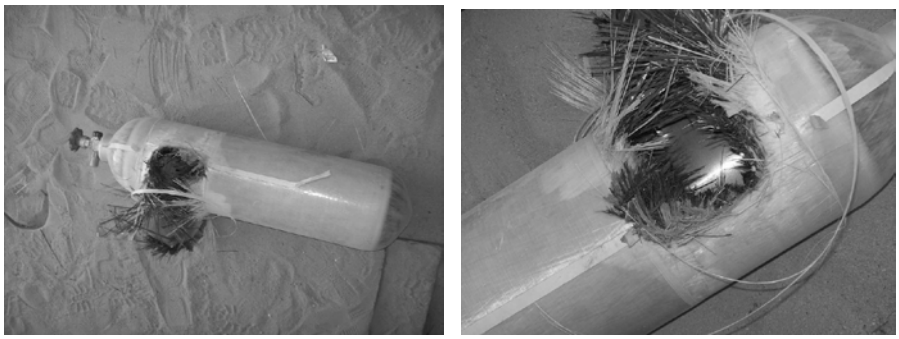

FIGURE A-3. Successful test examples.

Notes:

1) Upon inspection it is discovered that the liner section is still contained within the composite and attached to the cylinder; not violating the 2-inch section of the entry hole requirement defined in 3.7.7.
2) No exit hole is identified. (It is not required to have an exit hole.)
3) The cylinder remained in one piece.
4) Outer composite layers detached. (This is allowed and expected.)

UNSUCCESSFUL TEST EXAMPLES

FIGURE A-4. Unsuccessful test examples.

Notes:

1) Upon inspection, it is clearly observed that the cylinder did not remain in one piece.
2) Sections/pieces of liner greater than 2 inches are observed to be detached from cylinder.

FIGURE A-5. Unsuccessful test examples.

Notes:

1) Upon evaluation, it is discovered that the liner section is not contained within the composite nor attached to the cylinder; thus violating the 2-inch section of the entry hole requirement defined in 3.7.7 and failing the test.
2) The cylinder remained in one piece.
3) Outer composite layers detached. (This is allowed and expected.)

CONCLUDING MATERIAL

Custodians:
Army - AV
Navy - AS
Air Force - 11

Review activity:
Air Force - 71

Preparing activity:
Navy – AS
Project 1660-2017-002

NOTE: The activities listed above were interested in this document as of the date of this document. Since organizations and responsibilities can change, you should verify the currency of the information above using the ASSIST Online database at https://assist.dla.mil.