Downloaded from http://www.everyspec.com

INCH-POUND

MIL-PRF-32521
22 July, 2015

PERFORMANCE SPECIFICATION

EXPEDITIONARY SHELTER PROTECTION SYSTEM (ESPS) PANEL MODULE

This specification is approved for use by all Departments and Agencies of the Department of Defense.

Record of Revisions

REV	CHANGED BY	REVISED PAGE(S)	DESCRIPTION	DATE	APPROVAL

Comments, suggestions, or questions on this document should be addressed to: Product Manager Force Sustainment Systems, ATTN: Ryan Devine, U.S. Army Natick Soldier Systems Center, Natick, MA 01760. You may also email ryan.p.devine.civ@mail.mil. Since contact information can change, you may want to verify the currency of this address using the ASSIST Online database at https://assist.dla.mil.

FSC: 5450

DISTRIBUTION STATEMENT A: Approved for public release; distribution is unlimited.

Downloaded from http://www.everyspec.com

1. SCOPE

1.1. Scope. This specification covers the performance, safety, and environmental requirements of one panel module, be it a single panel or a combination of panels, of the Expeditionary Shelter Protection System (ESPS). The ESPS is comprised of the panel module (the armor material) and a variety of auxiliary structural support equipment, as indicated by the listing of drawings provided below. However, this specification pertains to the requirements and verifications for the armor panel module only.

1.2. Classification. The Expeditionary Shelter Protection System (ESPS) is a modular armor system for protection of shelters, equipment, supplies, and temporary fighting positions.

2. APPLICABLE DOCUMENTS

2.1. General. The documents listed in this section are specified in sections 3 and 4 of this specification. This section does not include documents in other sections of this specification or recommended for additional information or as examples. While every effort has been made to ensure the completeness of this list, document users are cautioned that they must meet all specified requirements documents cited in sections 3 and 4 of this specification, whether or not they are listed.

2.2. Government documents.

2.2.1. Specifications, standards, and handbooks. The following specifications, standards, and handbooks form a part of this document to the extent specified herein. Unless otherwise specified, the issues of these documents are those listed in the issue of the Department of Defense Index of Specifications and Standards (DoDISS) and supplement thereto, cited in the solicitation (see section 6.2).

Aircraft Materials Fire Test Handbook DOT/FAA/AR-00/12 – Vertical Bunsen Burner Test For Cabin and Cargo Compartment Materials

(This specification is available at the Federal Aviation Administration William J. Hughes Technical Center's Full-Text Technical Reports page: www.actlibrary.tc.faa.gov in Adobe Acrobat portable document format (PDF))

FED-STD-595C – Colors Used in Government Procurement

MIL-STD-662F – Department of Defense Test Method Standard, V_{50} Ballistic Test for Armor

MIL-STD-810 – Test Method Standard for Environmental Engineering and Laboratory Tests

MIL-STD-1472 – Design Criteria Standard Human Engineering

MIL-STD-1916 – Department of Defense Test Method Standard, DoD Preferred Method for Acceptance of Product

Downloaded from http://www.everyspec.com

(Copies of these documents are available online at http://quicksearch.dla.mil or from the Standardization Document Order Desk, 700 Robbins Avenue, Building 4D, Philadelphia, PA 19111-5094)

2.2.2. Other government documents, drawings, and publications.

Dwg 5-10-0200S1 – SUPPORT STRUT, WELDED ASSEMBLY, MBPS

Dwg 5-10-0200S2 – SUPPORT STRUT, WELDED ASSEMBLY, MBPS

Dwg 5-10-0201S1 – MODULAR BALLISTIC PROTECTION SYSTEM (MBPS)

Dwg 5-10-0201S2 – MODULAR BALLISTIC PROTECTION SYSTEM (MBPS)

Dwg 5-10-0208 – GROUND ANCHOR BRACKET

Dwg 5-10-0209 – STRAP, RETAINING, MBPS

Dwg 5-10-0211S1 – BALLISTIC PANEL, MBPS

Dwg 5-10-0211S2 – BALLISTIC PANEL, MBPS

(Copies of drawings are available from the US Army Research Development and Engineering Command, Natick Soldier Research Development and Engineering Center, ATTN: AMSRD-NSR-ST-P, Natick, MA 01760-5018)

2.3. Non-government documents.

ASTM C 393 – Standard Test Method for Core Shear Properties of Sandwich Constructions by Beam Flexure

ASTM D 570 – Standard Test Method for Water Absorption of Plastics

ASTM D 790 – Standard Test Methods for Flexural Properties of Unreinforced and Reinforced Plastics and Electrical Insulating Materials

ASTM D 4812-06 – Standard Test Method for Unnotched Cantilever Beam Impact Resistance of Plastics

ASTM G 65-04 – Standard Test Method for Measuring Abrasion Using the Dry Sand/Rubber Wheel Apparatus

(Copies of these documents are available online at http://www.astm.org)

AATCC Test Method 169-2003 – Weather Resistance of Textiles: Xenon Lamp Exposure

Downloaded from http://www.everyspec.com

(A copy of this document is available online at http://www.aatcc.org)

UL-94 – Tests for Flammability of Plastic Material Parts in Devices and Appliances

(A copy of this document is available online at http://www.ul.com)

2.4. Order of precedence. In the event of a conflict between the text of this document and the references cited herein, the text of this document takes precedence. Nothing in this document, however, supersedes applicable laws and regulations unless a specific exemption has been obtained.

3. REQUIREMENTS

3.1. First article. When specified (see section 6.2), samples shall be subjected to first article inspection (see section 6.3) in accordance with section 4.2.

3.2. Construction. Materials and construction methods are the choice and responsibility of the contractor and shall be capable of meeting all the performance, operational, and environmental requirements specified herein.

3.3. Workmanship. Finished ESPS panel modules shall conform to the quality of product established by this performance specification. Utmost care shall be taken during fabrication to ensure quality workmanship and safety of the service person using the item. All materials to be used in the construction of the ESPS shall conform to all material requirements in this purchase description and internal specifications, unless otherwise specified. Manufacturing practices shall be capable of consistently yielding product that conforms to all requirements in this specification and any internal specifications. Continual improvement shall also be a constant focus of the manufacturing practices. All component materials shall be properly marked and identified, and also protected properly during storage. Materials shall be produced and integrated to extend durability and provide consistency of appearance throughout system's life. All components to be assembled shall be thoroughly cleaned of all foreign matter. In any case of material, process, or equipment change desired to be made by the Contractor, the written consent of the Government shall be obtained before making the change. Additional testing may be required prior to implementation of the change to verify product performance.

3.4. Operating requirements. The ESPS panel module, be it a single panel or combination of panels, shall satisfy the following user-oriented requirements. If the ESPS module is comprised of a combination of panels, those panels shall be capable of being assembled and disassembled in the field with no special tools (if the drawings provided above are complied with, this capability will be confirmed). Additionally, the ESPS panel module shall be capable of being assembled and disassembled with no more than four (4) personnel (if the weight requirement below is complied with, this capability will be confirmed).

3.4.1. Dimensions. ESPS panels shall conform to the dimensions shown in NSRDEC drawings 5-10-0211S1 and 5-10-0211S2. All dimensions are in inches. The length and width of the ESPS panel have an allowable tolerance of ± 0.25 inches. The thickness of any individual ESPS panel shall not exceed 0.45 inches and shall not vary over the total area by more than 0.05 inches (flatness/uniformity). Cut out locations shall be within ± 0.10 inches and cut out dimensions tolerance is ± 0.10 inches including any

Downloaded from http://www.everyspec.com

edging materials. The cut out areas shall not impede the use of the support strut, the ground anchor bracket, or the retaining strap. See section 4.6.1 for verification procedure.

3.4.1.1 Panel edging. ESPS panels shall have a firmly bonded or panel-integral edging that protects the periphery of the panel from liquid absorption, delamination, cuts, wear, and tear. The edging itself shall also be resistant to cutting, wear, and tear. The edging shall completely cover the entire edge of the panel and all cut outs that expose the edge. The edging may extend in from the sides (overlap) of the panel a maximum of 0.50 inches. The edging may only extend the panel's overall width by maximum of 0.25 inches per edge, or a total of 0.50 inches across the entire panel (two edges). If the edging is a non-integral component of the panel, then the edging shall consist of a one-piece or continuously bonded construction. The edging shall be firmly and completely attached to the panel, i.e. there shall be no unbounded areas. The edging shall be rounded at the corners with a minimum radius of 0.0625-inch. A corner shall be defined as the transition between the edge of the panel and the bottom of the panel, i.e. the "lower" part of the edging. The edge of a finished panel shall be smooth as to not cause, or potentially cause, injury to the user. The edging shall match the color of the panel itself or be black. See section 4.6.1 for verification procedure.

3.4.2. Weight. Any individual ESPS panel shall weigh less than five and a quarter (5.25) pounds per square foot. The ESPS panel module, if it is comprised of a combination of panels, shall weigh less than ten (10) pounds per square foot total. See section 4.6.2 for verification procedure.

3.4.3. Labeling. ESPS panels shall be labeled in exact accordance with NSRDEC drawing 5-10-0201S1/2. See section 4.6.3 for verification procedure.

3.4.4. Color. ESPS panels shall be one of the following exterior colors:

a. Tan 686A (33446)
b. Green (383)
c. White 506 (27885)

Colors shall conform to FED-STD-595C – Colors Used in Government Procurement. See section 4.6.4 for verification procedure.

3.4.5. Health and safety. The ESPS panel module shall be non-hazardous to the immediate user and personnel in the surrounding area.

3.4.5.1 Fire resistance. ESPS panels shall undergo 12-second and 60-second fire resistance testing in accordance with "The Aircraft Materials Fire Test Handbook DOT/FAA/AR-00/12 for Vertical Bunsen Burner Test for Cabin and Cargo Compartment Materials." The average flame time for all specimens shall not exceed 2 seconds. The average char length for all specimens shall not exceed 8 inches. The specimens shall not exhibit any melt drip. See section 4.6.5.1 for verification procedure.

3.4.5.2 Sharp edges. ESPS panels shall not contain any sharp edges or burrs. Edges should be beveled and any and all burrs removed. The radius of corners shall not be less than 0.05 inches or greater than 1 inch. See section 4.6.5.2 for verification procedure.

Downloaded from http://www.everyspec.com

3.5. Ownership and support. The ESPS panel module, be it a single panel or combination of panels, shall satisfy the following ownership and support requirements.

3.5.1. Edge impact resistance. ESPS panels shall have their edging durability tested to ensure the edging maintains a proper bond during impact testing. The edging shall not crack, warp, or separate from the panel material during impact testing. Panel edge strength shall meet or exceed 4.90 J/in^2 when tested on an IZOD impact machine in accordance with ASTM D 4812-06 Standard Test Method for Unnotched Cantilever Beam Impact Resistance of Plastics. See section 4.7.1 for verification procedure.

3.5.2. Abrasion. ESPS panels shall have their abrasion resistance tested to ensure the panels withstand typical use in their operating environment without deterioration. The panel specimen (1-inch x 3-inch) shall not experience a volume loss in excess of 0.015 in^3 during abrasion testing in accordance with Procedure B of ASTM G65-04 "Standard Test Method for Measuring Abrasion using the Dry Sand/Rubber Wheel Apparatus". See section 4.7.2 for verification procedure.

3.5.3. Delamination. ESPS panels shall show no signs of delamination (separation into constituent layers) upon visual inspection or acoustic interrogation. See section 4.7.3 for verification procedure.

3.5.4. Field agent resistance. ESPS panels shall show no evidence of softening, peeling, delamination, ply separation, or tackiness when exposed or subjected to the following agents:

a. DEET insect repellent, NSN 6840-01-284-3982, O-I-503 Type II, Concentration A
b. Gasoline, ASTM D910
c. Motor Oil, MIL-PRF-2104
d. Hydraulic fluid, petroleum base, MIL-PRF-6083
e. Fire resistant hydraulic fluid, MIL-PRF-46170
f. Fuel Oil, Diesel, ASTM D975
g. Turbine Fuel, Aviation, JP-8, MIL-DTL-83133
h. Rifle Bore Cleaning Compound, NSN 6850-00-224-6656, MIL-PRF-372
i. Lubricating Oil, Weapons (LSA), NSN 9150-00-935-6597
j. Lubricating Oil, Arctic, Weapons, NSN 9150-00-292-9689
k. Face paint, NSN 6850-01-493-7309

See section 4.7.4 for verification procedure.

3.6. Operating environment requirements. The ESPS panel module shall withstand both common and extreme environmental conditions and shall not degrade in any way when exposed to those conditions.

3.6.1. Weatherometer resistance. ESPS panels shall exhibit no evidence of cracking, blistering, edge separation, delamination, or otherwise degradation after being subjected to weatherometer resistance testing. See section 4.8.1 for verification procedure.

3.6.2. Ultraviolet (UV) light resistance. ESPS panels shall exhibit no evidence of cracking, blistering, edge separation, delamination, or otherwise degradation after being subjected to prolonged ultraviolet (UV) light exposure. See section 4.8.2 for verification procedure.

Downloaded from http://www.everyspec.com

3.6.3. Water absorption. ESPS panels shall not increase in weight by more than 0.5 percent during twenty-four (24) hour fresh water immersion or increase in weight by more than 1.0 percent during long-term 3-day fresh water immersion. If moisture absorption does occur, the panel shall remain within the weight requirements of section 3.4.2. See section 4.8.3 for verification procedure.

3.6.4. Hot storage. ESPS panels shall be subjected to a conditioning of 24 hours (± 1 hr) at 160°F (± 10°F) in a circulating air test chamber. The test specimen shall then be allowed to return to ambient temperature. The test specimen shall then be removed from the test chamber and visually examined to ensure no warping, delamination, cracking, or otherwise apparent degradation of the panel. Thickness measurements are to be performed at five (5) random locations on the panel before and after conditioning. Each of these five thickness measurements, when compared before and after conditioning, shall not vary by more than 10% of the original thickness. See section 4.8.4 for verification procedure.

3.6.5. Cold storage. ESPS panels shall be subjected to a conditioning of 24 hours (± 1 hr) at minus 60°F (± 10°F) in a test chamber. The test specimen shall then be allowed to return to ambient temperature. The test specimen shall then be removed from the test chamber and visually examined to ensure no warping, delamination, cracking, or otherwise apparent degradation of the panel. Thickness measurements are to be performed at five (5) random locations on the panel before and after conditioning. Each of these five thickness measurements, when compared before and after conditioning, shall not vary by more than 10% of the original thickness. See section 4.8.5 for verification procedure.

3.7. Performance requirements. The ESPS panel module, be it a single panel or combination of panels, shall provide ballistic protection from indirect (fragments) as well as direct (firearm) fire.

3.7.1. Ballistic performance. The ESPS panel module, be it a single panel or combination of panels, shall meet the ballistic requirements set forth in TABLE I at 0-degree obliquity with the specified projectiles under the following conditions:

a. Ambient temperature
b. At -25°F
c. At 130°F

TABLE I. **Ballistic requirements**

Projectile	Minimum V_{50} BL(P) at 0° Obliquity (ft/sec)	V_0 Resistance to Penetration (ft/sec)
7.62×39mm API BZ	2500	2350 – 2400
US 5.56×45mm M855 Ball	3400	3250 – 3300
2-grain RCC 1/	4275	N/A
4-grain RCC 1/	4275	N/A
16-grain RCC 1/	4275	N/A
44-grain FSP 2/	4275	N/A

1/ Right Circular Cylinders shall be in accordance with Figure 1 below.

Downloaded from http://www.everyspec.com

2/ Fragment-Simulating Projectile shall be in accordance with Figure 2 below (MIL-DTL-46593B with Amendment 1, 1 April 2006)

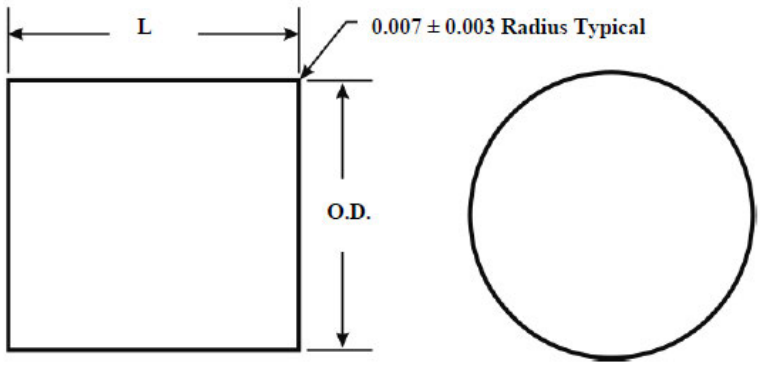

Weight (Grains)	* Outside Diameter (OD) (inches)	Length (L) (inches)
2 (± 0.10)	0.111 (± 0.001)	0.111
4 (± 0.15)	0.134 (± 0.001)	0.147
16 (± 0.5)	0.219 (± 0.001)	0.221
64 (± 1.0)	0.344 (± 0.001)	0.355

Notes:

1. OD is nominal diameter of drill rod as furnished.
2. Adjust length (L) to meet the indicated weight (grains).
3. Material is AISAI 4340 heat treated to Rockwell "C" hardness of 29 ±2.

FIGURE 1. **Right circular cylinder**

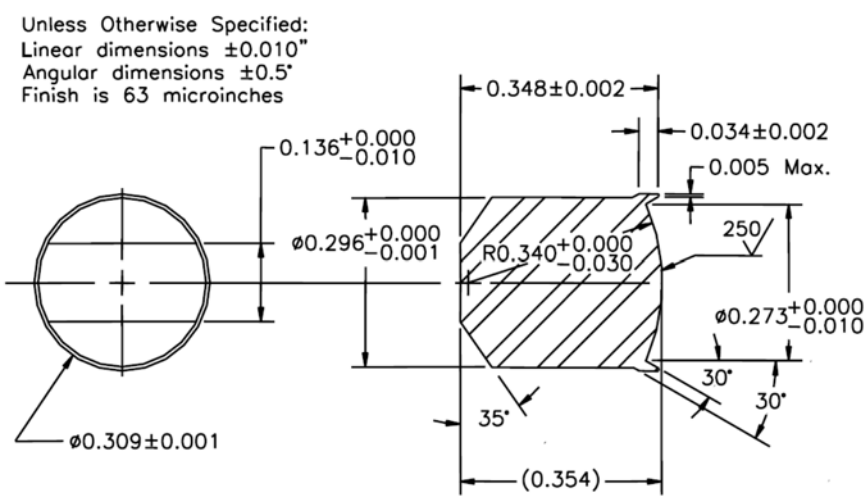

Notes:

1. Adjust length to meet the desired weight (grains).
2. Material is AISAI 4340 heat treated to Rockwell "C" hardness of 30 ±1.

FIGURE 2. **Fragment-simulating projectile**

Downloaded from http://www.everyspec.com

This protection level shall be provided over the entire ESPS panel module except for the panel edge where, if a non-ballistic edge material is used, it shall be less than 0.25 inches in width from the edge of ballistic material. See section 4.9.1 for verification procedure and details.

3.7.2. Flexural strength. The ESPS, be it a single panel or combination of panels, shall withstand blast overpressures from relevant threats and remain in place to perform the system's objective of providing ballistic protection. ESPS panels or any other system components shall not become projectiles or cause any harm to human occupants being protected in a blast event. Therefore, the ESPS, be it a single panel or combination of panels, shall meet the flexural strength criteria in Table II below. These performance characteristics shall be determined using a three-point bend test, in accordance with ASTM D790 "Standard Test Methods for Flexural Properties of Unreinforced and Reinforced Plastics and Electrical Insulating Materials." In addition, the panel specimen(s) subjected to testing shall exhibit no delamination during or following the test. See section 4.9.2 for verification procedure.

TABLE II. **Flexural Strength Requirements**

Flexural Modulus (Young's)	> 3,300 ksi
Flexural Stress at Yield	> 14,850 psi
Flexural Strain at Maximum Stress	< 0.50%
Flexural Load at Maximum Stress	> 130 lbf

4. VERIFICATION

4.1. Verification alternatives. Alternative test methods, techniques or equipment including the application of cost effective sampling procedures may be proposed by the contractor. Acceptable alternative verification approaches shall be identified in the contract or amended into the contract.

4.2. Classification of testing. The testing requirements specified herein are categorized as First Article Testing (FAT) and Lot Acceptance Testing (LAT) as specified in TABLE III.

4.2.1. First article testing (FAT). Unless otherwise specified in the contract or purchase order, the ESPS panel module supplier is responsible for all FATs and LATs herein. The government reserves the right to perform any of the tests set forth in this specification where such tests are deemed necessary to ensure supplies and services conform to prescribed requirements. When a FAT is required, it includes all of the verifications listed in sections 4.6, 4.7, 4.8, and 4.9 (see Table III) unless otherwise specified in the contract.

4.2.2. Lot acceptance testing (LAT). LAT of ESPS panel modules shall include those verifications listed in sections 4.6, 4.7, 4.8, and 4.9 (see Table III) as defined in the contract or by the procuring activity (see paragraph 6.2). LAT shall occur at a frequency of once per 500 units produced, unless otherwise specified by the Government.

Downloaded from http://www.everyspec.com

4.2.3. First Article Testing (FAT) and Lot Acceptance Testing (LAT).

TABLE III. **Requirements and verifications**

CHARACTERISTICS	REQUIREMENT SECTION	VERIFICATION SECTION	FIRST ARTICLE TESTING (FAT)	LOT ACCEPT-ANCE TESTING (LAT)
Operating Requirements	**3.4**	**4.6**		
Dimensions	3.4.1	4.6.1	X	X*
Panel Edging	3.4.1.1	4.6.1	X	X*
Weight	3.4.2	4.6.2	X	X*
Labeling	3.4.3	4.6.3	X	X*
Color	3.4.4	4.6.4	X	CoC
Health and Safety	3.4.5	4.6.5		
Fire Resistance	3.4.5.1	4.6.5.1	X	CoC
Sharp Edges	3.4.5.2	4.6.5.2	X	X*
Ownership and Support	**3.5**	**4.7**		
Edge Impact Resistance	3.5.1	4.7.1	X	X*
Abrasion	3.5.2	4.7.2	X	X*
Delamination	3.5.3	4.7.3	X	X*
Field Agent Resistance	3.5.4	4.7.4	X	X*
Operating Environment Requirements	**3.6**	**4.8**		
Weatherometer Resistance	3.6.1	4.8.1	X	NA
Ultraviolet (UV) Light Resistance	3.6.2	4.8.2	X	NA
Water Absorption	3.6.3	4.8.3	X	NA
Hot Storage	3.6.4	4.8.4	X	NA
Cold Storage	3.6.5	4.8.5	X	NA
Performance Requirements	**3.7**	**4.9**		
Ballistic Performance	3.7.1	4.9.1		
V_{50} Ballistic Limit	3.7.1	4.9.1.1	X	X**
V_0 Resistance to Penetration	3.7.1	4.9.1.2	X	X**
Flexural Strength	3.7.2	4.9.2	X	X*

Notes:

1. X - testing required
2. CoC - certificate of conformance to include data
3. X* - test or inspection to be performed at vendor facility
4. X** - the government may elect to perform testing at their discretion
5. NA - not applicable

Downloaded from http://www.everyspec.com

4.3. Order of testing. Performing the various testing (operating, ownership & support, operating environment, and performance) can occur in any order.
4.4. Verification methods. The types of verification methods included in this section are visual inspection, dimensional measurements, sample tests, component properties analysis, and similarity to previously approved or previously qualified designs.

4.4.1. Verification using standard samples. Use standard samples to verify colors with visual inspections.

4.5. Responsibility for compliance. Production items shall meet all requirements specified in section 3. The supplier shall establish and maintain documented procedures for inspection and testing activities in order to verify that the specified requirements for the product are met. The required inspection, testing and the records to be established shall be detailed in a quality plan available to the government as specified in the contract or procuring activity. The inspection set forth in this specification shall become part of the contractor's overall inspection procedures or quality system. The absence of any inspection requirements in the specification shall not relieve the contractor of the responsibility of ensuring that all products or supplies submitted to the Government for acceptance comply with all requirements of the contract. Sampling inspection as part of the manufacturing operations is an acceptable practice to ascertain conformance to requirements, however, this does not authorize submission of known defective material, either indicated or actual, nor does it commit the Government to accept defective material.

4.6. Operating requirements. All verifications in this section shall be completed.

4.6.1. Dimensions. ESPS panels shall be visually inspected and subsequently measured using certified and calibrated devices to the nearest 0.01 inches. ESPS panels shall conform to the dimensions and tolerances stated in NSRDEC drawings 5-10-0211S1 and 5-10-0211S2 and section 3.4.1 of this specification.

4.6.2. Weight. ESPS panels shall be weighed on a certified and calibrated scale to the nearest 0.01 pounds. Total panel weight shall be divided by the total surface area of the panel to calculate its areal density (pounds per square foot (psf)). ESPS panels shall conform to all requirements specified in section 3.4.2.

4.6.3. Labeling. ESPS panels shall be visually inspected for legible, permanent labels in conformance with NSRDEC drawing 5-10-0201S1/2 as specified in section 3.4.3.

4.6.4. Color. ESPS panels shall be visually inspected for conformance with the standard sample colors specified in section 3.4.4.

4.6.5. Health and safety. All verifications in this section shall be completed.

4.6.5.1 Fire resistance. ESPS panels shall undergo 12-second and 60-second fire resistance testing in accordance with "The Aircraft Materials Fire Test Handbook DOT/FAA/AR-00/12 for Vertical Bunsen Burner Test for Cabin and Cargo Compartment Materials." However, test specimens will be prepared as defined by UL-94, not as defined by The Aircraft Materials Fire Test Handbook DOT/FAA/AR-00/12. For edge testing, the sample size specified by UL-94 shall be used. For face testing, a 6-inch x 6-inch

Downloaded from http://www.everyspec.com

sample shall be used. ESPS panels shall conform to the fire resistance requirements specified in section 3.4.5.1.

4.6.5.2 Sharp edges. ESPS panels shall be thoroughly examined and measured with certified and calibrated devices to the nearest 0.01 inches to verify that they conform to all requirements specified in section 3.4.5.2.

4.7. Ownership and support. All verifications in this section shall be completed.

4.7.1. Edge impact resistance. ESPS panels shall undergo edge impact testing on an IZOD impact machine (or a similar device otherwise approved in the test standard) in accordance with ASTM D4812-06 “Standard Test Method for Unnotched Cantilever Beam Impact Resistance of Plastics.” Testing shall be conducted to the test standard with the point of impact occurring at the interaction line between the panel and edging. The testing procedure yields a value of energy, measured in Joules per square millimeter (J/in^2), absorbed by the edging as it is detached from the panel edge. ESPS panels shall meet or exceed this energy requirement as specified in section 3.5.1. In addition, while impact testing is conducted, the panel shall be visually inspected to ensure that no cracking, warping, or separation from the panel material occurs.

4.7.2. Abrasion. ESPS panels shall undergo abrasion testing in accordance with Procedure B of ASTM G65-04 “Standard Test Method for Measuring Abrasion Using the Dry Sand/Rubber Wheel Apparatus”. The specimen volume loss (in in^3) shall not exceed the requirement specified in section 3.5.2.

4.7.3. Delamination. ESPS panels shall be visually inspected and tested for delamination using acoustic interrogation using a coin or tap hammer. The full surface of the panel shall be interrogated in a 6-inch x 6-inch array pattern. A bright, metallic sound indicates good structure. A dull "thud" indicates a flaw such as a delamination or disbond. No such delamination shall be evident from either visual inspection or acoustic interrogation as specified in section 3.5.3.

4.7.4. Field agent resistance. ESPS panels shall be tested for field agent resistance at standard ambient conditions in accordance with the following procedure:

1. With a clean cloth remove any mold release, dirt, or foreign matter from the exterior of the panel.
2. Mark an area of at least 6 inches square on the panel’s surface.
3. Apply a liberal amount of the agent specified to the panel sufficient to cover the total marked area for a minimum period of 24 hours. The area shall remain wet with the agent for a minimum of 24 hours. If the agent appears to be close to drying out during the test period, the agent shall be reapplied. It may be useful to use an absorbent pad saturated with the agent to maintain the wetting of the panel.
4. At the end of the test period, remove any excess agent from the panel by dabbing with a dry cloth.
5. Visually examine the test specimen for conformance with the requirements specified in section 3.5.4. Failure to meet any requirement shall constitute test failure.

Downloaded from http://www.everyspec.com

4.8. Operating environment requirements. All verifications in this section shall be completed.

4.8.1. Weatherometer resistance. ESPS panels shall be tested for weather resistance in accordance with AATCC Test Method #169. Specimen size shall be 6-inch x 6-inch. Upon completion of testing, the panel specimen shall be visually inspected for conformance with the requirements specified in section 3.6.1.

4.8.2. Ultraviolet light damage. ESPS panels shall undergo ultraviolet (UV) testing in accordance with AATCC Test Method 169-2003 "Weather Resistance of Textiles: Xenon Lamp Exposure." The test cycle to be used shall be Option 3, with modifications. Modifications shall include irradiance set to 0.55, use of a quartz inner filter, and use of a borosilicate outer filter. Specimen size shall be 6-inch x 6-inch. The exposure time for the test shall be 200 hours. Upon completion of testing, the panel specimen shall be visually inspected for conformance with the requirements specified in section 3.6.2. Discoloration may occur which should be noted but does not signify a failure.

4.8.3. Water absorption. ESPS panels shall undergo water absorption testing in accordance with ASTM D570 "Standard Test Method for Water Absorption of Plastics." However, the test specimen size dictated by the standard is impractical for this product, so it is modified. The test specimen for this testing shall be a full-size ESPS panel. The testing procedures to be used are 7.1, Twenty-Four Hour Immersion and 7.4, Long-Term Immersion. The twenty-four hour immersion procedure is used to determine the water absorbed by weight for the initial 24-hour exposure to moisture. The long-term immersion procedure is used to determine the water absorbed by weight at the relative saturation point. Specimens shall be immersed for 24 hours at ambient temperature. Before and after testing, the panels shall be weighed on a certified and calibrated scale to the nearest 0.01 pounds so that their percent increase in weight can be determined. ESPS panels shall conform to the requirements specified in section 3.6.3.

4.8.4. Hot storage. ESPS panels shall be subjected to a conditioning of 24 hours (± 1 hr) at 160°F (± 10°F) in a circulating air test chamber. The test specimen shall then be allowed to return to ambient temperature. The test specimen shall then be removed from the test chamber and visually examined for conformance with the requirements specified in section 3.6.4. Additionally, thickness measurements are to be performed with a certified and calibrated device at five (5) random locations on the panel before and after conditioning. These thickness values shall conform to the requirements specified in section 3.6.4.

4.8.5. Cold storage. ESPS panels shall be subjected to a conditioning of 24 hours (± 1 hr) at minus 60°F (± 10°F) in a test chamber. The test specimen shall then be allowed to return to ambient temperature. The test specimen shall then be removed from the test chamber and visually examined for conformance with the requirements specified in section 3.6.5. Additionally, thickness measurements are to be performed with a certified and calibrated device at five (5) random locations on the panel before and after conditioning. These thickness values shall conform to the requirements specified in section 3.6.5.

4.9. Performance requirements. All verifications in this section shall be completed.

Downloaded from http://www.everyspec.com

4.9.1. Ballistic performance. The ESPS panel module, be it a single panel or combination of panels, shall be subjected to V_{50} ballistic limit testing and V_0 resistance to penetration testing to verify its performance against indirect (fragments) as well as direct (firearm) fire.

4.9.1.1 V_{50} ballistic limit. The ESPS panel module, be it a single panel or combination of panels, shall be subjected to V_{50} ballistic limit testing in accordance with MIL-STD-662F under the temperature conditions specified in section 3.7.1. V_{50} shall be calculated as follows:

> *V_{50} BL(P) calculation:* The arithmetic mean of three (3) Partial Penetration (PP's) and three (3) Complete Penetrations (CP's) within a 125 ft/sec velocity spread or four (4) Partial Penetration (PP's) and four (4) Complete Penetrations (CP's) within a 150 ft/sec velocity spread yield the minimum allowable V_{50} BL determination that will be accepted as reliable test results. If six (6) partial penetrations occur that are above the minimum V_{50}, the system demonstrates a V_{50} above the minimum, the system passes, and that V_{50} test is terminated. All shots' velocities are recorded.

Shot spacing shall conform to the diagram provided in FIGURE 3 below. Note: not all ten (10) shots may be required to adequately calculate the V_{50} BL(P). Testing shall occur at each of the temperature conditions specified in section 3.7.1. Each panel module's calculated V_{50} ballistic limits shall meet or exceed the requirements specified in section 3.7.1. The Government reserves the right to adjust shot spacing to target perceived weak points in the armor panel.

Downloaded from http://www.everyspec.com

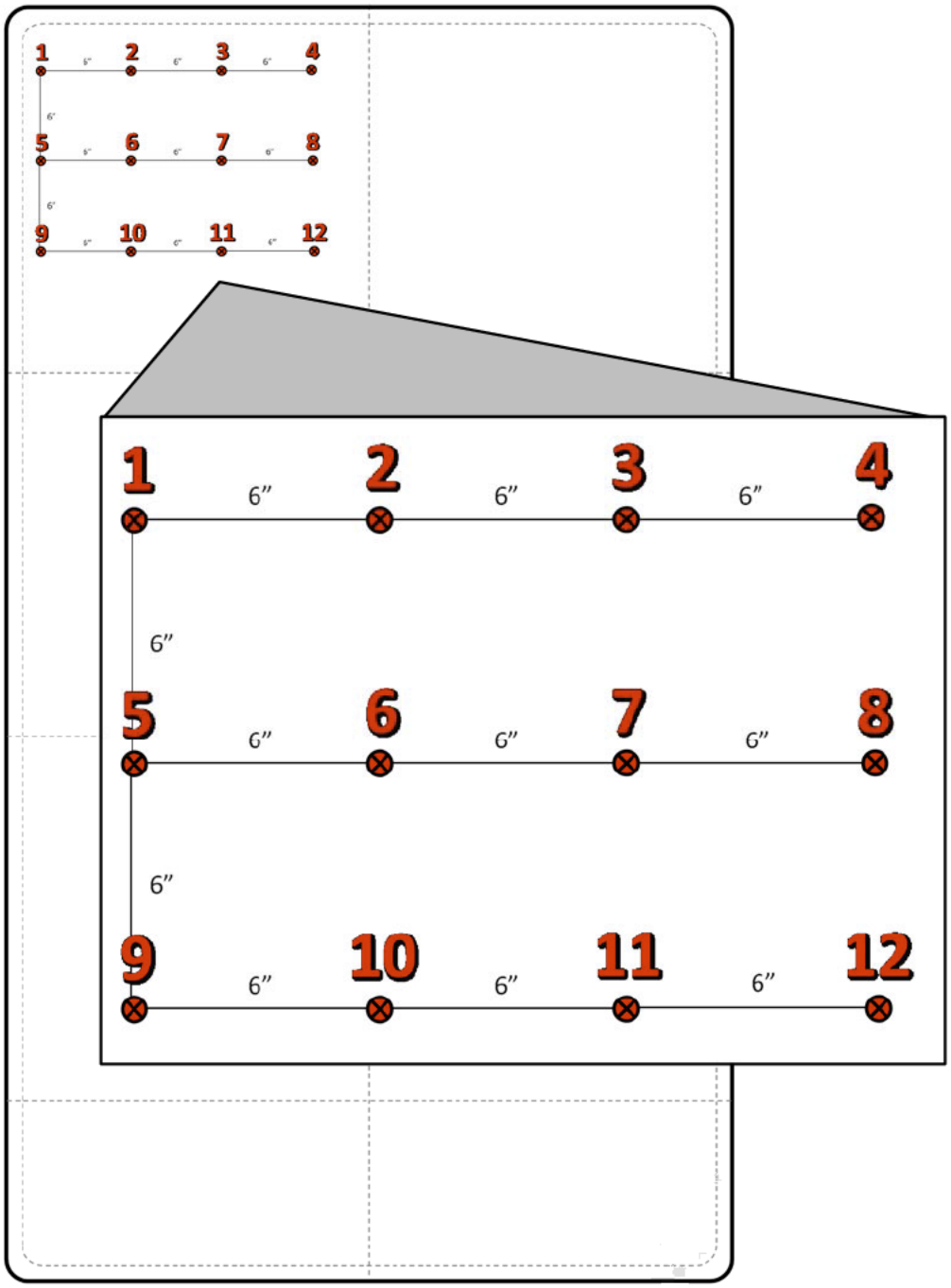

FIGURE 3. **V_{50} ballistic limit shot spacing**

Downloaded from http://www.everyspec.com

4.9.1.2 V_0 resistance to penetration. The ESPS panel module, be it a single panel or combination of panels, shall be subjected to V_0 resistance to penetration testing to validate the module's performance against the projectiles specified in section 3.7.1. The V_0 testing of ESPS panel modules shall include a minimum of two (2) fair impacts at 0-degree obliquity: an "Edge" fair impact and a "Face" fair impact. An "Edge" fair impact shall be between 1.0 to 2.0 inches from any edge of armor material and at least 6.0 inches from any previous impact that may have occurred on the panel module. A "Face" fair impact shall be 5.0-6.0 inches from any edge impact location and at least 6.0 inches from any previous impact that may have occurred on the panel module. The Government reserves the right to adjust shot spacing to target perceived weak points in the armor panel. The panel module must suffer zero Complete Penetrations (CPs) throughout V_0 resistance to penetration testing to pass.

4.9.2. Flexural strength. The ESPS panel module, be it a single panel or combination of panels, shall be subjected to a three-point bend test in accordance with ASTM D7264 "Standard Test Method for Flexural Properties of Polymer Matrix Composite Materials." The specimen size for this test shall be two (2) inches wide, with a length 20% longer than the support span used in the test apparatus. The specimen thickness shall be in accordance with the dimensional requirements set in section 3.4.1. The test shall continue until the specimen reaches 5.0% deflection or breaks, whichever occurs first. The ESPS panel module shall conform to the requirements specified in section 3.7.2.

5. PACKAGING

5.1. Packaging. For acquisition purposes, the contract or order specifies packaging requirements (see section 6.2). When DoD personnel perform material packaging, those personnel need to contact the responsible packaging activity to ascertain requisite packaging requirements. The Inventory Control Point packaging activity within the Military Department of Defense Agency, or within the Military Department's System Command, maintains packaging requirements. Packaging data retrieval is available from the managing Military Department's or Defense Agency's automated packaging files, CD-ROM products, or by contacting the responsible packaging activity.

6. NOTES

6.1. Intended use. The ESPS is intended for use in military base camps to provide ballistic protection from direct and indirect fire for shelters and their inhabitants, equipment, supplies, and/or temporary fighting positions.

6.2. Ordering data. Procurement documents should specify the following:

a. Title, number, and date of this specification and amendments
b. Type and class (see section 1.2)
c. Issue of DODISS to be cited in the solicitation (see section 2.2.1)
d. When first article inspection is required (see sections 3.1, 4.2, and 6.3)
e. Packaging requirements (see section 5.1)

6.3. First article. When requiring a first article inspection, contracting documents will provide specific guidance to offerors. This guidance will cover whether the first article is a first article sample, a first production item, or a number of items to be tested. These documents will also include specific

Downloaded from http://www.everyspec.com

instructions in acquisition documents regarding arrangements for examinations, approval of first article test results and disposition of first articles. Pre-solicitation documents should provide Government waiver rights for samples for first article inspection to bidders offering a previously acquired or tested product. Bidders offering such products, which wish to rely on such production or test, should furnish evidence with the bid, that prior Government approval is appropriate for the pending contract.

6.4. Conformance inspection. Affordable conformance inspection with confidence varies depending upon a number of procurement risk factors. Some of the factors include: Contractor past performance, Government schedules and budget, product material and design maturity, manufacturing capital equipment and processes applied, the controlled uniformity of those processes, labor skill and training, and the uniformity of measuring processes and techniques. During the solicitation, contracting documents should indicate those tests desired from Table 4.0-1 and their designated frequency based on a risk assessment for the procurement.

6.5. Standard color samples. Standard Color Samples are available from the contracting officer. Class I and Class II colors are similar to Camouflage Green 483 and Tan 686A in FED-STD-595.

6.6. Recycled, recovered, or environmentally preferable materials. Recycled, recovered, or environmentally preferable materials should be used to the maximum extent possible provided the material meets or exceeds all specified requirements and promotes economically advantageous life cycle costs.

6.7. Definitions.

Fair Impact. A fair impact is an impact of an unyawed projectile of the specified projectile type, velocity, and obliquity (±3 degrees), which adheres to shot spacing and edge distance constraints. Any impact which violates shot spacing or edge distance is not considered a fair impact.

Complete Penetration (CP) for V50 Testing. A complete penetration occurs when the impacting projectile or any fragment thereof, or any fragment of the test specimen perforates the rear surface of the armor system.

Complete Penetration (CP) for V0 Testing. A complete penetration occurs when the impacting projectile, any fragment of the projectile, or any fragment of the test specimen fully penetrates the entire armor system.

Partial Penetration (PP). Any fair impact that is not a complete penetration is considered a partial penetration.

Areal Density (AD). A measure of the weight of the armor per unit area, usually expressed in pounds per square foot (lb/ft^2) or kilograms per square meter (kg/m^2) of surface area.

Obliquity. The angle, in degrees, between the line-of-flight of the bullet and a line perpendicular to the front surface (facing the line-of-fire) of the armor system. A projectile's line-of-flight which is perpendicular to the surface of the armor system strikes at zero (0) degrees of obliquity.

Yaw. Projectile yaw is the angular deviation of the longitudinal axis of the projectile from the line of

Downloaded from http://www.everyspec.com

flight at a point as close to the impact point on the target as is practical to measure.

V_{50} Ballistic Limit (BL). In general, the velocity at which the probability of penetration of an armor material is 50 percent.

CONCLUDING MATERIAL:

Custodians:
Army – GL

Review Activities:
DLA – DH

Preparing Activity:
Army – GL
(Project 5450-2015-001)

NOTE: The activities listed above were interested in this document as of the date of this document. Since organizations and responsibilities can change, you should verify the currency of the information above using the ASSIST Online database at https://assist.dla.mil.